SINAMICS G130/G150

List Manual · 01/2012

SINAMICS

SIEMENS

SIEMENS

SINAMICS

SINAMICS G130/G150

List Manual

Preface

Parameters 1

Function diagrams 2

Faults and alarms 3

Appendix A

List of abbreviations B

List of references C

Index D

Valid for

Drive	**Firmware version**
SINAMICS	**4.5**

A5E03263479A

01/2012

Safety notices

This manual contains information that you should observe to ensure your own personal safety and prevent material damage. The notices referring to your personal safety are highlighted in the manual by a warning triangle; notices that relate to material damage only have no warning triangle. The notices shown below are graded according to the level of hazard (from most to least hazardous):

Danger

Indicates that death or serious injury **will** result if proper precautions are not taken.

Warning

Indicates that death or serious injury **may** result if proper precautions are not taken.

Caution

With a warning triangle, indicates that minor injury **may** result if proper precautions are not taken.

Caution

Without a warning triangle, indicates that material damage may result if proper precautions are not taken.

Notice

Indicates that an undesirable result or state may occur if the corresponding instructions are not observed.

If more than one level of danger is simultaneously applicable, the warning notice for the highest level is used. A warning notice with a warning triangle indicating possible personal injury may also include a warning relating to material damage.

Qualified Personnel

The associated device/system may only be installed and operated in conjunction with this documentation. The device/system may only be commissioned and operated by **qualified personnel**. For the purpose of the safety notices in this documentation, "qualified personnel" are those authorized to commission, ground, and label equipment, systems, and circuits in accordance with established safety procedures.

Proper Use of Siemens Products

Please observe the following:

Warning

Siemens products are only permitted to be used for the applications specified in the catalog and in the associated technical documentation. If third-party products and components are to be used, they must be recommended or approved by Siemens. To ensure proper and safe operation of these products, they must be correctly transported, stored, set up, mounted, installed, commissioned, operated, and maintained. The permissible ambient conditions must be met. Information in the associated documentation must be observed.

Trademarks

All names identified with ® are registered trademarks of Siemens AG. Any other names used in this publication may be trademarks whose use by third parties for their own purposes could violate the rights of the owner.

Copyright Siemens AG 2012 All Rights Reserved

The reproduction, transmission, or use of this document or its contents is not permitted without express written permission. Failure to observe this rule will lead to damage claims. All rights reserved, especially those relating to granting patents or GM registration.

Siemens AG
Industry Sector
Postfach 4848
90327 NÜRNBERG
GERMANY

Liability Disclaimer

We have checked that the contents of this document correspond to the hardware and software described. Nevertheless, we cannot assume responsibility for any deviations that may arise. The data in this document is regularly checked and any necessary corrections included in subsequent editions.

© Siemens AG 2012
Subject to change without prior notice.

Preface

SINAMICS documentation

The SINAMICS documentation is organized in the following categories:

- General documentation/catalogs
- Manufacturer/service documentation

More information

Information on the following topics is available under the link:

- Ordering documentation/overview of documentation
- Additional links to download documents
- Using documentation online (find and search in manuals/information).

http://www.siemens.com/motioncontrol/docu

My Documentation Manager

Information on how to produce individual contents for your own machine documentation based on Siemens contents is available under the link:

http://www.siemens.com/mdm

Training

Information about SITRAIN (Siemens Training on products, systems and solutions for automation) is available under the following link:

http://www.siemens.com/sitrain

FAQs

You can find Frequently Asked Questions in the Service&Support pages under Product Support:

http://support.automation.siemens.com

SINAMICS

You can find information on SINAMICS at:

http://www.siemens.com/sinamics

© Siemens AG 2012 All Rights Reserved

Usage phases and their tools/documents (as an example)

Table Preface-1Usage phases and the available tools/documents

Usage phase	Tools/documents
Orientation	SINAMICS G Sales Documentation
Planning/configuration	SIZER configuration tool Configuration Manuals, Motors
Decision making / ordering	SINAMICS G Catalogs
Installation/assembly	• SINAMICS G150 Operating Instructions • SINAMICS G130 Operating Instructions
Commissioning	• STARTER commissioning tool • SINAMICS G150 Operating Instructions • SINAMICS G130 Operating Instructions
Usage/operation	• SINAMICS G150 Operating Instructions • SINAMICS G130 Operating Instructions
Maintenance/servicing	• SINAMICS G150 Operating Instructions • SINAMICS G130 Operating Instructions

Target group

This documentation is aimed at machine manufacturers, commissioning engineers, and service personnel who use SINAMICS.

Benefits

This documentation contains the comprehensive information about parameters, function diagrams and faults and alarms required to commission and service the system.

This manual should be used in addition to the other manuals and tools provided for the product.

© Siemens AG 2012 All Rights Reserved

Standard scope

The scope of the functionality described in this document can differ from the scope of the functionality of the drive system that is actually supplied.

- Other functions not described in this documentation might be able to be executed in the drive system. This does not, however, represent an obligation to supply functions of this kind when new equipment is delivered or during servicing.
- The documentation can also contain descriptions of functions that are not available in a particular product version of the drive system. The functionalities of the supplied drive system should only be taken from the ordering documentation.
- Extensions or changes made by the machine manufacturer must be documented by the machine manufacturer.

For reasons of clarity, this documentation does not contain all of the detailed information on all of the product types. This documentation cannot take into consideration every conceivable type of installation, operation and service/maintenance.

Search tools

The following guides are provided to help you locate information in this manual:

1. Table of contents
   - General table of contents for the complete manual (after the preface).
   - Table of contents for function diagrams (Section 2.1).
2. List of abbreviations
3. List of references
4. Index

Technical Support

Country-specific telephone numbers for technical support are provided on the Internet at:

http://www.siemens.com/automation/service&support

© Siemens AG 2012 All Rights Reserved

© Siemens AG 2012 All Rights Reserved

Table of contents

1 Parameters 1-11

1.1 Overview of parameters 1-12
1.1.1 Explanation of parameter list 1-12
1.1.2 Number ranges of parameters 1-28

1.2 List of parameters 1-31

1.3 Parameters for data sets 1-951
1.3.1 Parameters for command data sets (CDS) 1-951
1.3.2 Parameters for drive data sets (DDS) 1-953
1.3.3 Parameters for encoder data sets (EDS) 1-961
1.3.4 Parameters for motor data sets (MDS) 1-962
1.3.5 Parameters for power unit data sets (PDS) 1-965

1.4 Parameters for write protection and know-how protection 1-967
1.4.1 Parameters with "WRITE_NO_LOCK" 1-967
1.4.2 Parameters with "KHP_WRITE_NO_LOCK" 1-969
1.4.3 Parameters with "KHP_ACTIVE_READ" 1-969

2 Function diagrams 2-971

2.1 Table of contents 2-973

2.2 Explanations on the function diagrams 2-980

2.3 Overviews 2-985

2.4 CU320-2 input/output terminals 2-999

2.5 CU_LINK 2-1006

2.6 PROFIdrive 2-1008

2.7 Internal control/status words 2-1052

2.8 Sequence control 2-1065

2.9 Brake control 2-1068

2.10 Safety Integrated Basic Functions 2-1073

2.11 Safety Integrated Extended Functions 2-1080

2.12 Setpoint channel 2-1096

2.13 Encoder evaluation 2-1105

2.14 Vector control 2-1108

2.15 Technology functions 2-1131

2.16 Technology controller 2-1137

2.17 Signals and monitoring functions 2-1143

2.18 Diagnostics 2-1151

2.19 Data sets 2-1157

© Siemens AG 2012 All Rights Reserved

2.20 Basic Infeed 2-1163
2.21 Terminal Board 30 (TB30) 2-1170
2.22 Communication Board CAN10 (CBC10) 2-1175
2.23 Terminal Module 31 (TM31) 2-1182
2.24 Terminal Module 150 (TM150) 2-1192
2.25 Voltage Sensing Module (VSM) 2-1196
2.26 Basic Operator Panel 20 (BOP20) 2-1199

3 Faults and alarms 3-1201
3.1 Overview of faults and alarms 3-1202
3.1.1 General information on faults and alarms 3-1202
3.1.2 Explanation of the list of faults and alarms 3-1207
3.1.3 Number ranges of faults and alarms 3-1210
3.2 List of faults and alarms 3-1212

A Appendix A-1657
A.1 ASCII table (excerpt) A-1658

B List of abbreviations B-1659

C List of references C-1669

D Index D-1675

© Siemens AG 2012 All Rights Reserved

Parameters 1

Contents

1.1	Overview of parameters	1-12
1.2	List of parameters	1-31
1.3	Parameters for data sets	1-951
1.4	Parameters for write protection and know-how protection	1-967

© Siemens AG 2012 All Rights Reserved

1.1 Overview of parameters

1.1.1 Explanation of parameter list

Basic structure of parameter descriptions

The data in the following example has been chosen at random. The table below contains all the information that can be included in a parameter description. Some of the information is optional.

The parameter list (See Section 1.2) is structured as follows:

- - - - - - - - - - - - - - - - - - - Start of example -

pxxxx[0...n] **BICO: Long parameter name / short parameter name**

Drive object (function module)

Can be changed: C1(x), C2(x), U, T	**Calculated:** CALC_MOD_REG	**Access level:** 2
Data type: Unsigned32/Integer16	**Dynamic index:** CDS, p0170	**Function diagram:** 2080
P group: Closed-loop control	**Unit group:** 7_1	**Unit selection:** p0505
Not for motor type: FEM	**Scaling:** p2000	**Expert list:** 1
Min 0.00 [Nm]	**Max** 10.00 [Nm]	**Factory setting** 0.00 [Arms]

Description: Text

Values:
0: Name and meaning of value 0
1: Name and meaning of value 1
2: Name and meaning of value 2
etc.

Recommendation: Text

Index:
[0] = Name and meaning of index 0
[1] = Name and meaning of index 1
[2] = Name and meaning of index 2
etc.

Bit array:

Bit	Signal name	1 signal	0 signal	FP
00	Name and meaning of bit 0	Yes	No	8010
01	Name and meaning of bit 1	Yes	No	-
02	Name and meaning of bit 2	Yes	No	8012
	etc.			

Dependency: Text
See also: pxxxx, rxxxx
See also: Fxxxxx, Axxxxx

Danger: **Warning:** **Caution:** Safety notices with a warning triangle

Caution: **Notice:** Safety notices without a warning triangle

Note: Information which might be useful.

- - - - - - - - - - - - - - - - - - - End of example -

© Siemens AG 2012 All Rights Reserved

pxxxx[0...n] **Parameter number**

The parameter number is made up of a "p" or "r", followed by the parameter number and the index (optional).

Examples of representation in the parameter list:

- p... Adjustable parameter (read and write parameter)
- r... Display parameter (read-only)
- p0918 Adjustable parameter 918
- p0099[0...3] Adjustable parameter 99, indices 0 to 3
- p1001[0...n] Adjustable parameter 1001, indices 0 to n (n = configurable)
- r0944 Display parameter 944

Other examples of the notation used in the documentation:

- p1070[1] Adjustable parameter 1070, index 1
- p2098[1].3 Adjustable parameter 2098, index 1 bit 3
- r0945[2](3) Display parameter 945, index 2 of drive object 3
- p0795.4 Adjustable parameter 795, bit 4
- r2129.0...15 Display parameter 2129 with bit array (maximum 16 bits)

The following applies to adjustable parameters:

The parameter value as delivered is specified under "Factory setting" with the relevant unit in square brackets. The value can be adjusted within the range defined by "Min" and "Max".

The term "linked parameterization" is used in cases where changes to adjustable parameters affect the settings of other parameters.

Linked parameterization can occur, for example, as a result of the following actions or parameters:

- Execute macros

  p0015, p0700, p1000, p1500
- Set PROFIBUS telegram (BICO interconnections)

  p0922
- Set component lists

  p0230, p0300, p0301, p0400
- Automatic calculation and pre-assignment

  p0112, p0340, p0578, p3900
- Restore factory settings

  p0970

The following applies to display parameters:

The fields "Min", "Max" and "Factory setting" are specified with a dash "-" and the relevant unit in square brackets.

© Siemens AG 2012 All Rights Reserved

Note:

The parameter list can contain parameters that are not visible in the expert lists of the respective commissioning software (e.g. parameters for trace functions).

BICO: Long parameter name / short parameter name

The following abbreviations can appear in front of the parameter name:

- BI: Binector Input
  This parameter is used for selecting the source of a digital signal.
- BO: Binector Output
  This parameter is available as a digital signal for interconnection with other parameters.
- CI: Connector Input
  This parameter is used for selecting the source of an "analog" signal.
- CO: Connector Output
  This parameter is available as an "analog" signal for interconnection with other parameters.
- CO/BO: Connector/Binector Output
  This parameter is available as an "analog" and digital signal for interconnection with other parameters.

Note:

A connector input (CI) cannot be just interconnected with any connector output (CO, signal source).
When interconnecting a connector input using the commissioning software, only the corresponding possible signal sources are listed.

© Siemens AG 2012 All Rights Reserved

Drive object (function module)

A drive object (DO) is an independent, "self-contained" functional unit that has its own parameters and, in some cases, faults and alarms.

When carrying out commissioning using the commissioning software, you can select/deselect additional functions and their parameters by activating/deactivating function modules accordingly.

The parameter list specifies the associated drive object and function module for each individual parameter.

Examples:

- p1070 CI: Main setpoint
  VECTOR
  The parameter is only available with the VECTOR drive object, regardless of which function modules have been activated.
- p1055 BI: Jog bit 0
  VECTOR
  The parameter is available with the VECTOR drive object, regardless of which function modules have been activated (i.e. it is available with every activated function module belonging to the drive object).

A parameter can belong to one, several or all drive objects.

The following information relating to "Drive object" and "Function module" can be displayed under the parameter number:

Table 1-1 Data in the "Drive object (function module)" field

Drive object (function module)	Type	Meaning
All objects	-	All drive objects have this parameter.
B_INF	30	Basic Infeed Control Unregulated line infeed unit (without feedback) for rectifying the line voltage of the DC link
B_INF (parallel)	-	Basic Infeed with "Parallel connection" function module (r0108.15).
B_INF (brk mod ext)	-	Basic Infeed with "Braking Module External" function module (r0108.26).
B_INF (cooling unit)	-	Basic Infeed with "Cooling unit" function module (r0108.28)
B_INF (PROFINET)	-	Basic Infeed with "PROFINET" function module (r0108.31).
CU_G130_DP		Control Unit SINAMICS G130 with PROFIBUS interface.
CU_G130_DP (CAN)	-	Control Unit SINAMICS G130 with PROFIBUS interface and function module “CAN“ (p0108.29).
CU_G130_DP (COMM BOARD)		Control Unit SINAMICS G130 with PROFIBUS interface and "COMM board" function module (p0108.30).
CU_G130_DP (PROFINET)	-	Control Unit SINAMICS G130 with PROFIBUS interface and function module “PROFINET“ (p0108.31).
CU_G130_PN		Control Unit SINAMICS G130 with PROFINET interface.

© Siemens AG 2012 All Rights Reserved

Table 1-1 Data in the "Drive object (function module)" field, continued

Drive object (function module)	Type	Meaning
CU_G130_PN (CAN)	-	Control Unit SINAMICS G130 with PROFINET interface and function module “CAN“ (p0108.29).
CU_G130_PN (COMM BOARD)		Control Unit SINAMICS G130 with PROFINET interface and "COMM board" function module (p0108.30).
CU_G130_PN (PROFINET)		Control Unit SINAMICS G130 with PROFINET interface and function module “PROFINET“ (p0108.31).
CU_G150_DP		Control Unit SINAMICS G150 with PROFIBUS interface.
CU_G150_DP (CAN)	-	Control Unit SINAMICS G150 with PROFIBUS interface and function module “CAN“ (p0108.29).
CU_G150_DP (COMM BOARD)		Control Unit SINAMICS G150 with PROFIBUS interface and "COMM board" function module (p0108.30).
CU_G150_DP (PROFINET)	-	Control Unit SINAMICS G150 with PROFIBUS interface and function module “PROFINET“ (p0108.31).
CU_G150_PN		Control Unit SINAMICS G150 with PROFINET interface.
CU_G150_PN (CAN)	-	Control Unit SINAMICS G150 with PROFINET interface and function module “CAN“ (p0108.29).
CU_G150_PN (COMM BOARD)		Control Unit SINAMICS G150 with PROFINET interface and "COMM board" function module (p0108.30).
CU_G150_PN (PROFINET)		Control Unit SINAMICS G150 with PROFINET interface and function module “PROFINET“ (p0108.31).
ENC	300	Object for a DRIVE-CLiQ encoder.
HUB	150	DRIVE-CLiQ Hub Module.
TB30	100	Terminal Board 30.
TM150	208	Terminal Module 150.
TM31	200	Terminal Module 31.
TM54F_MA	205	Terminal Module 54F Master.
TM54F_SL	206	Terminal Module 54F Slave.
VECTOR_G	12	Vector drive for SINAMICS G130/G150.
VECTOR_G (n/M)	-	Vector drive for SINAMICS G130/G150 with "Speed/torque control" function module (r0108.2).
VECTOR_G (Safety red)	-	Vector drive for SINAMICS G130/G150 with "Safety rotary axis" function module (r0108.13).
VECTOR_G (ext. brake)	-	Vector drive for SINAMICS G130/G150 with "Extended brake control" function module (r0108.14).
VECTOR_G (parallel)	-	Vector drive for SINAMICS G130/G150 with "Parallel connection" function module (r0108.15).
VECTOR_G (Tech_ctrl)	-	Vector drive for SINAMICS G130/G150 with "Technology controller" function module (r0108.16).
VECTOR (ext. mess.)	-	Vector drive for SINAMICS G130/G150 with "Extended messages/monitoring functions" function module (r0108.17).

© Siemens AG 2012 All Rights Reserved

Table 1-1 Data in the "Drive object (function module)" field, continued

Drive object (function module)	Type	Meaning
VECTOR_G (cooling unit)	-	Vector drive for SINAMICS G130/G150 with "Cooling unit" function module (r0108.28).
VECTOR_G (CAN)	-	Vector drive for SINAMICS G130/G150 with "CAN" function module (r0108.29).
VECTOR_G (PROFINET)	-	Vector drive for SINAMICS G130/G150 with "PROFINET" function module (r0108.31).

Note:

The drive object type is used to identify the drive objects in the drive system (e.g. r0107, r0975[1]).

© Siemens AG 2012 All Rights Reserved

Can be changed

The "-" sign indicates that the parameter can be changed in any object state and that the change will be effective immediately.

The information "C1(x), C2(x), T, U" ((x): optional) means that the parameter can be changed only in the specified drive object state and that the change will not take effect until the object switches to another state. One or more states are possible.

The following states may be specified:

- C1(x) Device commissioning C1: **C**ommissioning **1**

  Device commissioning is in progress (p0009 >0).

  Pulses cannot be enabled.

  The parameter can only be changed when the device commissioning settings (p0009 > 0) are as follows:

  - C1: Can be changed for all settings p0009 > 0.
  - C1(x): Can only be changed when the settings are p0009 = x

  A modified parameter value does not take effect until device commissioning mode is exited with p0009 = 0.

- C2(x) Drive object commissioning C2: **C**ommissioning **2**

  Drive commissioning is in progress (p0009 = 0 and p0010 > 0).

  Pulses cannot be enabled.

  The parameter can only be changed when the drive commissioning settings (p0010 > 0) are as follows:

  - C2: Can be changed for all settings p0010 > 0
  - C2(x): Can only be changed when the settings are p0010 = x

  A modified parameter value does not take effect until drive commissioning mode is exited with p0010 = 0.

- U Operation U: R**u**n

  Pulses are enabled.

- T Ready for operation T: Ready **t**o run

  The pulses are not enabled and the status "C1(x)" or "C2(x)" is not active.

Note:

Parameter p0009 is CU-specific (available on the Control Unit).

Parameter p0010 is drive-specific (available for each drive object).

The operating state of individual drive objects is displayed in r0002.

© Siemens AG 2012 All Rights Reserved

Calculated

Specifies whether the parameter is influenced by automatic calculations.

The calculation attribute defines which activities influence the parameter.

The following attributes apply:

- CALC_MOD_ALL
  - p0340 = 1
  - Project download with commissioning software and send from p0340 = 3
- CALC_MOD_CON
  - p0340 = 1, 3, 4
- CALC_MOD_EQU
  - p0340 = 1, 2
- CALC_MOD_LIM_REF
  - p0340 = 1, 3, 5
  - p0578 = 1
- CALC_MOD_REG
  - p0340 = 1, 3

Note:

For p3900 > 0, p0340 = 1 is also called automatically.

After p1910 = 1, p0340 = 3 is also called automatically.

Access level

Specifies the access level required to be able to display and change the relevant parameter. The required access level can be set using p0003.

The system uses the following access levels:

- 1: Standard
- 2: Extended
- 3: Expert
- 4: Service
  Parameters with this access level are password protected.

Note:

Parameter p0003 is CU-specific (available on the Control Unit).

© Siemens AG 2012 All Rights Reserved

Data type

The information on the data type can consist of the following two items (separated by a slash):

- First item

  Data type of the parameter.

- Second item (for binector or connector input only)

  Data type of the signal source to be interconnected (binector/connector output).

Parameters can have the following data types:

- I8 Integer8 8-bit integer
- I16 Integer16 16-bit integer
- I32 Integer32 32-bit integer
- U8 Unsigned8 8 bits without sign
- U16 Unsigned16 16 bits without sign
- U32 Unsigned32 32 bits without sign
- Float FloatingPoint32 32-bit floating-point number

Depending on the data type of the BICO input parameter (signal sink) and BICO output parameter (signal source), the following combinations are possible when BICO interconnections are established:

Table 1-2 Possible combinations of BICO interconnections

	BICO input parameter			
	CI parameter			**BI parameter**
BICO output parameter	**Unsigned32/Integer16**	**Unsigned32/Integer32**	**Unsigned32/FloatingPoint32**	**Unsigned32/Binary**
CO: Unsigned8	x	x	–	–
CO: Unsigned16	x	x	–	–
CO: Integer16	x	x	–	–
CO: Unsigned32	x	x	–	–
CO: Integer32	x	x	–	–
CO: FloatingPoint32	x	x	x[1]	–
BO: Unsigned8	–	–	–	x
BO: Unsigned16	–	–	–	x

Legend: x: BICO interconnection permitted
–: BICO interconnection not permitted

1 Exception:
BICO input parameters with data type "Unsigned32/FloatingPoint32" can also be interconnected with the following BICO output parameters, although these are not of the "FloatingPoint32" data type:
CO: r8850, CO: r8860, CO: r2050, CO: r2060

© Siemens AG 2012 All Rights Reserved

Table 1-2 Possible combinations of BICO interconnections, continued

	BICO input parameter			
	CI parameter			BI parameter
BICO output parameter	**Unsigned32/Integer16**	**Unsigned32/Integer32**	**Unsigned32/FloatingPoint32**	**Unsigned32/Binary**
BO: Integer16	–	–	–	x
BO: Unsigned32	–	–	–	x
BO: Integer32	–	–	–	x
BO: FloatingPoint32	–	–	–	–
Legend:	x: BICO interconnection permitted –: BICO interconnection not permitted			
1 Exception: BICO input parameters with data type "Unsigned32/FloatingPoint32" can also be interconnected with the following BICO output parameters, although these are not of the "FloatingPoint32" data type: CO: r8850, CO: r8860, CO: r2050, CO: r2060				

Dynamic index

For parameters with a dynamic index [0...n], the following information is specified here:

- Data set (if available).
- Parameter for the number of indices (n = number - 1).

This field can contain the following information:

- "CDS, p0170" (Command Data Set, CDS count)

  Example:

  p1070[0] → main setpoint [command data set 0]

  p1070[1] → main setpoint [command data set 1], etc.
- "DDS, p0180" (Drive Data Set, DDS count)
- "EDS, p0140" (Encoder Data Set, EDS count)
- "MDS, p0130" (Motor Data Set, MDS count)
- "PDS, p0120" (Power unit Data Set, PDS count)
- "p2615" (traversing blocks count)

© Siemens AG 2012 All Rights Reserved

Function diagram

The parameter is included in this function diagram. The structure of the parameter function and its relationship with other parameters is shown in the specified function diagram.

Example:

Function diagram: 3060.3	3060:	Function diagram number
	3:	Signal path (optional)

P group (refers only to access via BOP (Basic Operator Panel))

Specifies the functional group to which the parameter belongs. The required parameter group can be set via p0004.

Note:

Parameter p0004 is CU-specific (available on the Control Unit).

Unit, unit group, and unit selection

The standard unit of a parameter is specified in square brackets after the values for "Min", "Max", and "Factory setting".

For parameters where the unit can be switched, the specifications for "Unit group" and "Unit selection" determine the group to which this parameter belongs and with which parameter the unit can be switched over.

Example:

Unit group: 7_1, unit selection: p0505

The parameter belongs to unit group 7_1 and the unit can be switched over using p0505.

All the potential unit groups and possible unit selections are listed below.

Table 1-3 Unit groups (p0100)

Unit group	Unit selection for p0100 =		Reference variable at %
	0	1	
7_4	Nm	lbf ft	-
8_4	N	lbf	-
14_2	W	HP	-
14_6	kW	HP	-
25_1	kgm^2	lb ft^2	-
27_1	kg	lb	-
28_1	Nm/A	lbf ft/A	-
29_1	N/Arms	lbf/Arms	-
30_1	m	ft	-

© Siemens AG 2012 All Rights Reserved

Table 1-4 Unit groups (p0349)

Unit group	Unit selection for p0349 =		Reference variable at %
	1	2	
15_1	mH	%	$\frac{1000 \cdot p0304}{2 \cdot \pi \cdot \sqrt{3} \cdot p0305 \cdot p0310}$
16_1	Ohm	%	$\frac{p0304}{\sqrt{3} \cdot p0305}$

Table 1-5 Unit groups (p0505)

Unit group	Unit selection for p0505 =				Reference variable at %
	1	2	3	4	
2_1	Hz	%	Hz	%	p2000
2_2	kHz	%	kHz	%	p2000
3_1	rpm	%	rpm	%	p2000
4_1	m/min	%	ft/min	%	p2000
4_2	m/min	m/min	ft/min	ft/min	-
5_1	Vrms	%	Vrms	%	p2001
5_2	V	%	V	%	p2001
5_3	V	%	V	%	p2001
6_1	mArms	%	mArms	%	p2002
6_2	Arms	%	Arms	%	p2002
6_3	mA	%	mA	%	p2002
6_4	A	%	A	%	p2002
6_5	A	%	A	%	p2002
7_1	Nm	%	lbf ft	%	p2003
7_2	Nm	Nm	lbf ft	lbf ft	-
7_3	Nm	%	lbf ft	%	1.0
8_1	N	%	lbf	%	p2003
8_2	N	N	lbf	lbf	-
8_3	N	%	lbf	%	1.0
14_1	W	%	HP	%	r2004 (drive)
14_3	W	%	HP	%	r2004 (infeed)
14_4	W	%	HP	%	r2004 (drive)
14_5	kW	%	HP	%	r2004 (drive)
14_7	kW	%	HP	%	r2004 (infeed)
14_8	kW	%	HP	%	r2004 (drive)

© Siemens AG 2012 All Rights Reserved

Table 1-5 Unit groups (p0505), continued

Unit group	Unit selection for p0505 =				Reference variable at %
	1	2	3	4	
14_9	W	W	HP	HP	-
14_10	kW	kW	HP	HP	-
14_11	var	%	var	%	r2004
14_12	kvar	%	kvar	%	r2004
17_1	Nms/rad	%	lbf ft s/rad	%	p2000/p2003
18_1	V/A	%	V/A	%	p2002/p2001
19_1	A/V	%	A/V	%	p2001/p2002
21_1	°C	°C	°F	°F	-
21_2	K	K	°F	°F	-
22_1	m/s^2	m/s^2	ft/s^2	ft/s^2	-
22_2	m/s^2	%	ft/s^2	%	p2007
23_1	Vrms s/m	Vrms s/m	Vrms s/ft	Vrms s/ft	-
24_1	Ns/m	Ns/m	lbf s/ft	lbf s/ft	-
24_2	Ns/m	%	lbf s/ft	%	p2000/p2003
26_1	m/s^3	m/s^3	ft/s^3	ft/s^3	-
39_1	$1/s^2$	%	$1/s^2$	%	p2007

Table 1-6 Unit group (p0595)

Unit group	Unit selection for p0595 =		Reference variable at %
	Value	Unit	
9_1	The values that can be set and the technological units are shown in p0595 (See Section 1.2).		

© Siemens AG 2012 All Rights Reserved

Parameter values

Min	Minimum value of the parameter [unit]
Max	Maximum value of the parameter [unit]
Factory setting	Value when shipped [unit] In the case of a binector/connector input, the signal source of the default BICO interconnection is specified. A non-indexed connector output is assigned the index [0]. A different value may be displayed for certain parameters (e.g. p1800) during first commissioning. Reason: The setting for these parameters is determined by the operating environment of the Control Unit (e.g. depending on the device type, macro, or power unit).

Note:

For SINAMICS G130/G150, the macros and their settings are provided in the following documentation:

SINAMICS G130/G150 Operating Instructions

Not for motor type

Specifies for which motor type this parameter has no significance.

ASM: Induction motor

FEM: Separately excited synchronous motor

PEM: Permanent-magnet synchronous motor

REL: Reluctance motor / SIEMOSYN motor

Scaling

Specification of the reference variable with which a signal value is automatically converted for a BICO interconnection.

The following reference variables are available:

- p2000 ... p2007: Reference speed, reference voltage, etc.
- PERCENT: 1.0 = 100 %
- 4000H: 4000 hex = 100%

© Siemens AG 2012 All Rights Reserved

Expert list

Specifies whether this parameter is available in the expert list of the specified drive objects in the commissioning software.

1: Parameter is available in the expert list.

0: Parameter is not available in the expert list.

Notice:

Users assume full responsibility for using parameters marked "Expert list: 0" (parameter does not exist in the expert list).

These parameters and their functionalities have not been tested and no further user documentation is available for them (e.g. description of functions). Moreover, no support is provided for these parameters by "Technical Support" (hotline).

Description

Explanation of the function of a parameter.

Values

List of the possible values of a parameter.

Recommendation

Information about recommended settings.

Index

The name and meaning of each individual index is specified for indexed parameters.

The following applies to the values (Min, Max, Factory setting) for indexed adjustable parameters:

- Min, Max:

  The adjustment range and unit apply to all indices.

- Factory setting:

  When all indices have the same factory setting, index 0 is specified with the unit to represent all indices.

  When the indices have different factory settings, they are all listed individually with the unit.

© Siemens AG 2012 All Rights Reserved

Bit array

For parameters with bit arrays, the following information is provided about each bit:

- Bit number and signal name
- Meaning with signal states 0 and 1
- Function diagram (optional)

  The signal is shown on this function diagram.

Dependency

Conditions that must be fulfilled in conjunction with this parameter. Also includes special effects that can occur between this parameter and others.

See also: List of other relevant parameters to be considered.

Safety notices

Important information that must be observed to avoid the risk of physical injury or material damage.

Information that must be observed to avoid any problems.

Information that the user may find useful.

Danger — The description of this safety notice can be found at the beginning of this manual (see **Safety notices**).

Warning — The description of this safety notice can be found at the beginning of this manual (see **Safety notices**).

Caution — The description of this safety notice can be found at the beginning of this manual (see **Safety notices**).

Caution — The description of this safety notice can be found at the beginning of this manual (see **Safety notices**).

Notice — The description of this safety notice can be found at the beginning of this manual (see **Safety notices**).

Note — Information that the user may find useful.

© Siemens AG 2012 All Rights Reserved

1.1.2 Number ranges of parameters

Note:

The following number ranges represent an overview for all of the parameters available for the SINAMICS drive family.

The parameters for the product described in this List Manual are described in detail in Section 1.2.

Parameters are grouped into the following number ranges:

Table 1-7 Number ranges for SINAMICS

Range		Description
From	To	
0000	0099	Display and operation
0100	0199	Commissioning
0200	0299	Power unit
0300	0399	Motor
0400	0499	Encoder
0500	0599	Technology and units, motor-specific data, probes
0600	0699	Thermal monitoring, maximum current, operating hours, motor data, central probe
0700	0799	Control Unit terminals, measuring sockets
0800	0839	CDS, DDS data sets, motor changeover
0840	0879	Sequence control (e.g. signal source for ON/OFF1)
0880	0899	ESR, parking, control and status words
0900	0999	PROFIBUS/PROFIdrive
1000	1199	Setpoint channel (e.g. ramp-function generator)
1200	1299	Functions (e.g. motor holding brake)
1300	1399	V/f control
1400	1799	Control
1800	1899	Gating unit
1900	1999	Power unit and motor identification
2000	2009	Reference values
2010	2099	Communication (fieldbus)
2100	2139	Faults and alarms
2140	2199	Signals and monitoring
2200	2359	Technology controller
2360	2399	Staging, hibernation

© Siemens AG 2012 All Rights Reserved

Table 1-7 Number ranges for SINAMICS, continued

Range		Description
From	To	
2500	2699	Position control (LR) and basic positioning (EPOS)
2700	2719	Reference values, display
2720	2729	Load gear
2800	2819	Logic operations
2900	2930	Fixed values (e.g. per cent, torque)
3000	3099	Motor identification results
3100	3109	Real time clock (RTC)
3110	3199	Faults and alarms
3200	3299	Signals and monitoring
3400	3659	Infeed control
3660	3699	Voltage Sensing Module (VSM), Braking Module internal
3700	3779	Advanced Positioning Control (APC)
3780	3819	Synchronization
3820	3849	Friction characteristic
3850	3899	Functions (e.g. long stator)
3900	3999	Management
4000	4599	Terminal Board, Terminal Module (e.g. TB30, TM31)
4600	4699	Sensor Module
4700	4799	Trace
4800	4849	Function generator
4950	4999	OA application
5000	5169	Spindle diagnostics
5400	5499	Line droop control (e.g. shaft generator)
5500	5599	Dynamic grid support (solar)
5600	5613	PROFIenergy
5900	6999	SINAMICS GM/SM/GL/SL
7000	7499	Parallel connection of power units
7500	7599	SINAMICS SM120
7700	7729	External signals
7770	7789	NVRAM, system parameters
7800	7839	EEPROM read/write parameters
7840	8399	Internal system parameters
8400	8449	Real time clock (RTC)
8500	8599	Data and macro management

© Siemens AG 2012 All Rights Reserved

Table 1-7 Number ranges for SINAMICS, continued

Range		Description
From	To	
8600	8799	CAN bus
8800	8899	Communication Board Ethernet (CBE), PROFIdrive
8900	8999	Industrial Ethernet, PROFINET, CBE20
9000	9299	Topology
9300	9399	Safety Integrated
9400	9499	Parameter consistency and storage
9500	9899	Safety Integrated
9900	9949	Topology
9950	9999	Diagnostics, internal
10000	10199	Safety Integrated
11000	11299	Free technology controller 0, 1, 2
20000	20999	Free function blocks (FBLOCKS)
21000	25999	Drive Control Chart (DCC)
50000	53999	SINAMICS DC MASTER (DC control)
61000	61001	PROFINET

© Siemens AG 2012 All Rights Reserved

1.2 List of parameters

Product: SINAMICS G130/G150, Version: 4502400, Language: eng
Objects: B_INF, CU_G130_DP, CU_G130_PN, CU_G150_DP, CU_G150_PN, ENC, HUB, TB30, TM150, TM31, TM54F_MA, TM54F_SL, VECTOR_G

r0002 Infeed operating display / INF op_display

B_INF

Can be changed: -	**Calculated:** -	**Access level:** 1
Data type: Integer16	**Dynamic index:** -	**Func. diagram:** -
P-Group: -	**Units group:** -	**Unit selection:** -
Not for motor type: -	**Scaling:** -	**Expert list:** 1
Min	**Max**	**Factory setting**
0	250	-

Description: Operating display for the infeed.

Value:
0: Operation - everything enabled
31: Rdy for sw on - pre-chrg running (p0857)
32: Ready for switching on - set "ON/OFF1" = "0/1" (p0840)
35: Switching on inhibited - carry out first commissioning (p0010)
41: Switching on inhibited - set "ON/OFF1" = "0" (p0840)
42: Switching on inhibited - set "OC/OFF2" = "1" (p0844, p0845)
44: Switching on inhibited - connect 24 V to terminal EP (hardware)
45: Switching on inhibited - remove fault cause, acknowledge fault
46: Switching on inhibited - exit comm mode (p0009, p0010)
60: Infeed de-activated/not operational
70: Initialization
200: Wait for booting/partial booting
250: Device signals a topology error

Dependency: Refer to: r0046

Notice: For several missing enable signals, the corresponding value with the highest number is displayed.

Note: OC: Operating condition
COMM: Commissioning

r0002 Control Unit operating display / CU op_display

CU_G130_DP, CU_G130_PN, CU_G150_DP, CU_G150_PN

Can be changed: -	**Calculated:** -	**Access level:** 1
Data type: Integer16	**Dynamic index:** -	**Func. diagram:** -
P-Group: -	**Units group:** -	**Unit selection:** -
Not for motor type: -	**Scaling:** -	**Expert list:** 1
Min	**Max**	**Factory setting**
0	117	-

Description: Operating display for the Control Unit (CU).

Value:
0: Operation
10: Ready
20: Wait for run-up
25: Wait for automatic FW update of DRIVE-CLiQ components
31: Commissioning software download active
33: Remove/acknowledge topology error
34: Exit commissioning mode
35: Carry out first commissioning
70: Initialization
80: Reset active
99: Internal software error
101: Specify topology
111: Insert drive object
112: Delete drive object
113: Change drive object number
114: Change component number
115: Run parameter download
117: Delete component

Notice: For several missing enable signals, the corresponding value with the highest number is displayed.

© Siemens AG 2012 All Rights Reserved

r0002 Encoder DO operating display / Enc DO op_display

ENC

Can be changed: -	**Calculated:** -	**Access level:** 1
Data type: Integer16	**Dynamic index:** -	**Func. diagram:** -
P-Group: -	**Units group:** -	**Unit selection:** -
Not for motor type: -	**Scaling:** -	**Expert list:** 1
Min	**Max**	**Factory setting**
0	250	-

Description: Operating display for encoder drive object

Value:
0: Encoder in cyclic operation
35: Carry out first commissioning (p0010)
45: Remove fault cause, acknowledge fault
46: Exit commissioning mode (p0009, p0010)
60: Encoder de-activated
200: Wait for booting/partial booting
250: Device signals a topology error

Notice: For several missing enable signals, the corresponding value with the highest number is displayed.

r0002 DRIVE-CLiQ Hub Module operating display / Hub op_display

HUB

Can be changed: -	**Calculated:** -	**Access level:** 1
Data type: Integer16	**Dynamic index:** -	**Func. diagram:** -
P-Group: -	**Units group:** -	**Unit selection:** -
Not for motor type: -	**Scaling:** -	**Expert list:** 1
Min	**Max**	**Factory setting**
0	250	-

Description: Operating display for the DRIVE-CLiQ Hub Module.

Value:
0: Module in cyclic operation
40: Module not in cyclic operation
50: Alarm
60: Fault
70: Initialization
120: Module de-activated
200: Wait for booting/partial booting
250: Device signals a topology error

Notice: For several missing enable signals, the corresponding value with the highest number is displayed.

r0002 TB30 operating display / TB30 op_display

TB30

Can be changed: -	**Calculated:** -	**Access level:** 1
Data type: Integer16	**Dynamic index:** -	**Func. diagram:** -
P-Group: -	**Units group:** -	**Unit selection:** -
Not for motor type: -	**Scaling:** -	**Expert list:** 1
Min	**Max**	**Factory setting**
0	250	-

Description: Operating display for Terminal Board 30 (TB30).

Value:
0: Module in cyclic operation
40: Module not in cyclic operation
60: Fault
70: Initialization
80: Reset active
120: Module de-activated
200: Wait for run-up
250: Device signals a topology error

Notice: For several missing enable signals, the corresponding value with the highest number is displayed.

© Siemens AG 2012 All Rights Reserved

r0002 TM150 operating display / TM150 op_display

TM150

Can be changed: -	**Calculated:** -	**Access level:** 1
Data type: Integer16	**Dynamic index:** -	**Func. diagram:** -
P-Group: -	**Units group:** -	**Unit selection:** -
Not for motor type: -	**Scaling:** -	**Expert list:** 1
Min	**Max**	**Factory setting**
0	250	-

Description: Operating display for Terminal Module 150 (TM150)

Value:
0: Module in cyclic operation
40: Module not in cyclic operation
50: Alarm
60: Fault
70: Initialization
120: Module de-activated
200: Wait for booting/partial booting
250: Device signals a topology error

Notice: For several missing enable signals, the corresponding value with the highest number is displayed.

r0002 TM31 operating display / TM31 op_display

TM31

Can be changed: -	**Calculated:** -	**Access level:** 1
Data type: Integer16	**Dynamic index:** -	**Func. diagram:** -
P-Group: -	**Units group:** -	**Unit selection:** -
Not for motor type: -	**Scaling:** -	**Expert list:** 1
Min	**Max**	**Factory setting**
0	250	-

Description: Operating display for Terminal Module 31 (TM31).

Value:
0: Module in cyclic operation
40: Module not in cyclic operation
50: Alarm
60: Fault
70: Initialization
120: Module de-activated
200: Wait for booting/partial booting
250: Device signals a topology error

Notice: For several missing enable signals, the corresponding value with the highest number is displayed.

r0002 TM54F operating display / TM54F op_display

TM54F_MA, TM54F_SL

Can be changed: -	**Calculated:** -	**Access level:** 1
Data type: Integer16	**Dynamic index:** -	**Func. diagram:** -
P-Group: -	**Units group:** -	**Unit selection:** -
Not for motor type: -	**Scaling:** -	**Expert list:** 1
Min	**Max**	**Factory setting**
0	250	-

Description: Operating display for Terminal Module 54F (TM54F).

Value:
0: Module in cyclic operation
40: Module not in cyclic operation
50: Alarm
60: Fault
70: Initialization
120: Module de-activated
200: Wait for booting/partial booting
250: Device signals a topology error

© Siemens AG 2012 All Rights Reserved

r0002 Drive operating display / Drv op_display

VECTOR_G	**Can be changed:** -	**Calculated:** -	**Access level:** 1
	Data type: Integer16	**Dynamic index:** -	**Func. diagram:** -
	P-Group: -	**Units group:** -	**Unit selection:** -
	Not for motor type: -	**Scaling:** -	**Expert list:** 1
	Min	**Max**	**Factory setting**
	0	250	-

Description: Operating display for the drive.

Value:

0: Operation - everything enabled
10: Operation - set "enable setpoint" = "1" (p1142, p1152)
11: Operation - set "enable speed controller" = "1" (p0856)
12: Operation - RFG frozen, set "RFG start" = "1" (p1141)
13: Operation - set "enable RFG" = "1" (p1140)
14: Oper. - MotID, excit. running and/or brake opens, SS2, SOS
15: Operation - open brake (p1215)
16: Operation - withdraw braking with OFF1 using "ON/OFF1" = "1"
17: Operation - braking with OFF3 can only be interrupted with OFF2
18: Operation - brake on fault, remove fault, acknowledge
19: Operation - armature short-circ./DC brake act. (p1230, p1231)
21: Ready for operation - set "Operation enable" = "1" (p0852)
22: Ready for operation - de-magnetizing running (p0347)
23: Ready for operation - set "Infeed operation" = "1" (p0864)
31: Ready for switching on - set "ON/OFF1" = "0/1" (p0840)
35: Switching on inhibited - carry out first commissioning (p0010)
41: Switching on inhibited - set "ON/OFF1" = "0" (p0840)
42: Switching on inhibited - set "OC/OFF2" = "1" (p0844, p0845)
43: Switching on inhibited - set "OC/OFF3" = "1" (p0848, p0849)
44: Switching on inhibited - connect 24 V to terminal EP (hardware)
45: Switching on inhibited - rectify fault, acknowledge fault, STO
46: Switching on inhibited - exit comm mode (p0009, p0010)
60: Drive object de-activated/not operational
70: Initialization
200: Wait for booting/partial booting
250: Device signals a topology error

Dependency: Refer to: r0046

Notice: For several missing enable signals, the corresponding value with the highest number is displayed.

Note: OC: Operating condition
EP: Enable Pulses (pulse enable)
RFG: Ramp-function generator
COMM: Commissioning
MotID: Motor data identification
SS2: Safe Stop 2
SOS: Safe Operating Stop
STO: Safe Torque Off

p0003 BOP access level / BOP acc_level

CU_G130_DP, CU_G130_PN, CU_G150_DP, CU_G150_PN	**Can be changed:** C1, U, T	**Calculated:** -	**Access level:** 1
	Data type: Integer16	**Dynamic index:** -	**Func. diagram:** -
	P-Group: -	**Units group:** -	**Unit selection:** -
	Not for motor type: -	**Scaling:** -	**Expert list:** 1
	Min	**Max**	**Factory setting**
	1	4	1

Description: Sets the access level for reading and writing parameters via the Basic Operator Panel (BOP).

© Siemens AG 2012 All Rights Reserved

Value:
1: Standard
2: Extended
3: Expert
4: Service

Note:
Access level 1 (standard):
Parameters for simplest possible operations.
Access level 2 (extended):
Parameters to operate the basic functions of the drive unit.
Access level 3 (experts):
Expert know-how is required for these parameters (e.g. BICO parameterization).
Access level 4 (service):
For these parameters, it is necessary that authorized service personnel enter the appropriate password (p3950).

p0004 BOP display filter / BOP disp_filter

CU_G130_DP, CU_G130_PN, CU_G150_DP, CU_G150_PN	**Can be changed:** C2(1), U, T	**Calculated:** -	**Access level:** 1
	Data type: Integer16	**Dynamic index:** -	**Func. diagram:** -
	P-Group: -	**Units group:** -	**Unit selection:** -
	Not for motor type: -	**Scaling:** -	**Expert list:** 1
	Min	**Max**	**Factory setting**
	0	99	0

Description:
Sets the display filter for parameters with the Basic Operator Panel (BOP).

Value:
0: All parameters
1: Displays, signals
2: Power unit
3: Motor
4: Encoder/pos enc
5: Technology/units
7: Digital inputs/outputs commands sequence control
8: Analog inputs/outputs
10: Setpoint channel/ramp-fct generator
12: Functions
13: U/f control
14: Control
15: Data sets
17: Basic positioner
18: Gating unit
19: Motor identification
20: Communication
21: Faults, alarms, monitoring functions
25: Cl-loop pos ctrl
28: Free function blocks
47: Trace and function generator
50: OA parameters
90: Topology
95: Safety Integrated
98: Command Data Sets (CDS)
99: Drive Data Sets (DDS)

Dependency:
Refer to: p0003

Notice:
The display filter via p0004 provides precise filtering and displays the corresponding parameters only when p0009 and p0010 = 0.

Note:
The set access level via p0003 is also relevant for the display filter via p0004.
Examples (assumption: p0009 = p0010 = 0):
p0003 = 1, p0004 = 3
--> Only the parameters for the motor with access level 1 are displayed.
p0003 = 2, p0004 = 3
--> Only the parameters for the motor with access levels 1 and 2 are displayed.

© Siemens AG 2012 All Rights Reserved

p0005[0...1] BOP operating display selection / BOP op_disp sel

All objects

Can be changed: U, T	**Calculated:** -	**Access level:** 2
Data type: Unsigned16	**Dynamic index:** -	**Func. diagram:** -
P-Group: -	**Units group:** -	**Unit selection:** -
Not for motor type: -	**Scaling:** -	**Expert list:** 1
Min	**Max**	**Factory setting**
0	65535	[0] 2
		[1] 0

Description: Sets the parameter number and parameter index for display for p0006 = 2, 4 for the Basic Operator Panel (BOP).

Examples for the SERVO drive object:

p0005[0] = 21, p0005[1] = 0: Actual speed smoothed (r0021)

p0005[0] = 25, p0005[1] = 0: Output voltage smoothed (r0025)

Index: [0] = Parameter number
[1] = Parameter index

Dependency: Refer to: p0006

Note: Procedure:

1.

The parameter number to be displayed should be set in index 0. Only the monitoring parameters (read-only parameters) can be set that actually exist for the actual drive object.

If the set parameter number is not indexed, or if there is an index in index 1 that lies outside the valid range of the set parameter, then index 1 is automatically set to 0.

2.

The index that belongs to the parameter set in index 0 should be set in index 1. The permissible changes in index 1 always depend on the parameter number set in index 0.

p0006 BOP operating display mode / BOP op_ disp mode

B_INF, VECTOR_G

Can be changed: U, T	**Calculated:** -	**Access level:** 3
Data type: Integer16	**Dynamic index:** -	**Func. diagram:** -
P-Group: -	**Units group:** -	**Unit selection:** -
Not for motor type: -	**Scaling:** -	**Expert list:** 1
Min	**Max**	**Factory setting**
0	4	4

Description: Sets the mode of the operating display for the Basic Operator Panel (BOP) in the operating states "ready for operation" and "operation".

Value:
0: Operation --> r0021, otherwise r0020 <--> r0021
1: Operation --> r0021, otherwise r0020
2: Operation --> p0005, otherwise p0005 <--> r0020
3: Operation --> r0002, otherwise r0002 <--> r0020
4: p0005

Dependency: Refer to: p0005

Note: Mode 0 ... 3 can only be selected if also r0020, r0021 are available on the drive object.

Mode 4 is available for all drive objects.

© Siemens AG 2012 All Rights Reserved

p0006 BOP operating display mode / BOP op_ disp mode

CU_G130_DP, CU_G130_PN, CU_G150_DP, CU_G150_PN, ENC, HUB, TB30, TM150, TM31, TM54F_MA, TM54F_SL

Can be changed: U, T	**Calculated:** -	**Access level:** 3
Data type: Integer16	**Dynamic index:** -	**Func. diagram:** -
P-Group: -	**Units group:** -	**Unit selection:** -
Not for motor type: -	**Scaling:** -	**Expert list:** 1

Min	Max	Factory setting
4	4	4

Description: Sets the mode of the operating display for the Basic Operator Panel (BOP) in the operating states "ready for operation" and "operation".

Value:
4: p0005

Dependency: Refer to: p0005

Note: Mode 0 ... 3 can only be selected if also r0020, r0021 are available on the drive object.
Mode 4 is available for all drive objects.

p0007 BOP background lighting / BOP lighting

CU_G130_DP, CU_G130_PN, CU_G150_DP, CU_G150_PN

Can be changed: U, T	**Calculated:** -	**Access level:** 3
Data type: Unsigned32	**Dynamic index:** -	**Func. diagram:** -
P-Group: -	**Units group:** -	**Unit selection:** -
Not for motor type: -	**Scaling:** -	**Expert list:** 1

Min	Max	Factory setting
0 [s]	2000 [s]	0 [s]

Description: Sets the delay time until the background lighting of the Basic Operator Panel (BOP) is switched off.
If no keys are actuated, then the background lighting automatically switches itself off after this time has expired.

Note: p0007 = 0: Background lighting is always switched on (factory setting).

p0008 BOP drive object after booting / BOP DO after boot

CU_G130_DP, CU_G130_PN, CU_G150_DP, CU_G150_PN

Can be changed: U, T	**Calculated:** -	**Access level:** 3
Data type: Unsigned16	**Dynamic index:** -	**Func. diagram:** -
P-Group: -	**Units group:** -	**Unit selection:** -
Not for motor type: -	**Scaling:** -	**Expert list:** 1

Min	Max	Factory setting
1	65535	1

Description: Sets the required drive object that is active at the Basic Operator Panel (BOP) after booting.

Note: The value from p0008 initializes the display on the Basic Operator Panel (BOP) at the top left after booting.
The drive object Control Unit is selected using the value 1.

p0009 Device commissioning parameter filter / Dev comm par_filt

CU_G130_DP, CU_G130_PN, CU_G150_DP, CU_G150_PN

Can be changed: C1, T	**Calculated:** -	**Access level:** 1
Data type: Integer16	**Dynamic index:** -	**Func. diagram:** -
P-Group: -	**Units group:** -	**Unit selection:** -
Not for motor type: -	**Scaling:** -	**Expert list:** 1

Min	Max	Factory setting
0	10000	1

Description: Sets the device and basic drive commissioning.
By appropriately setting this parameter, those parameters are filtered that can be written into in the various commissioning steps.

Value:
0: Ready
1: Device configuration
2: Defining the drive type/function module
3: Drive base configuration
4: Data set base configuration

© Siemens AG 2012 All Rights Reserved

29: Device download
30: Parameter reset
50: OA application configuration
55: OA application installation
101: Topology input
111: Insert drive object
112: Delete drive object
113: Change drive object number
114: Change component number
115: Parameter download
117: Delete component
10000: Ready (asynchron)

Notice: For p0009 = 10000 the following applies:

After the value has been modified, no further parameter modifications can be made and the status is shown in r3996. Modifications can be made again when r3996 = 0.

Note: The drives can only be powered up outside the device commissioning (the inverter enabled). In this case, p0009 must be 0 (Ready) and the individual drive objects must have already gone into operation (p0010).

p0009 = 1: Device configuration

At the first commissioning of the device, after booting, the device is in the "device configuration" state. To start the internal automatic first commissioning of the drive unit, p0009 should be set to 0 (Ready) after the ID for the actual topology (r0098) was transferred into the ID for the target topology (p0099). To do this, it is sufficient to set a single index value of p0099[x] the same as r0098[x]. Before the device has been completely commissioned, no other parameter can be changed. After the first commissioning was carried out, in this state, when required, other basic device configuration parameters can be adapted (e.g. the basic sampling time in p0110).

p0009 = 2: Defines the drive type / function module

In this state, the drive object types and/or the function modules can be changed or selected for the individual drive objects. To do this, the drive object type can be set using p0107[0...15] and the function can be set using p0108[0...15] (refer to p0101[0...15]).

p0009 = 3: Drive basic configuration

In this state, after the device has been commissioned for the first time, basic changes can be made for the individual drive objects (e.g. sampling times in p0111, p0112, p0115 and the number of data sets in p0120, p0130, p0140, p0170, p0180).

p0009 = 4: Data set basic configuration

In this state, after the device has been commissioned for the first time, for the individual drive objects changes can be made regarding the assignment of the components (p0121, p0131, p0141, p0151, p0161) to the individual data sets and the assignment of the power unit, motor and encoder to the drive data sets (p0185, ...).

p0009 = 29: Device download

If a download is made using the commissioning software, the device is automatically brought into this state. After the download has been completed, p0009 is automatically set to 0 (ready). It is not possible to manually set p0009 to this value.

p0009 = 30: Parameter reset

In order to bring the complete unit into the "first commissioning" state or to load the parameters saved using p0977, to start, p0009 must be set to this value. p0976 can then be changed to the required value.

p0009 = 50: OA application configuration

In this state, after the device has been commissioned for the first time, changes can be made for the individual drive objects regarding the activity (p4956) of the OA applications.

p0009 = 55: OA application installation

OA applications can be installed and/or uninstalled in this state.

p0009 = 101: Topology input

In this state, the DRIVE-CLiQ target topology can be entered using p9902 and p9903.

p0009 = 111: Insert drive object

This state allows a new drive object to be inserted using p9911.

p0009 = 112: Delete drive object

This state allows existing drive objects to be deleted using p9912 after the device has been commissioned for the first time.

p0009 = 113: Change drive object number

This state allows the drive object number of existing drive objects to be changed using p9913 after the device has been commissioned for the first time.

© Siemens AG 2012 All Rights Reserved

p0009 = 114: Change component number

This state allows the component number of existing components to be changed using p9914 after the device has been commissioned for the first time.

p0009 = 115: Parameter download

This state allows the complete device and drive commissioning using the parameter services.

p0009 = 117: Delete component

This state allows components to be deleted using p9917 after the device has been commissioned for the first time.

p0010 Infeed commissioning parameter filter / INF comm par_filt

B_INF

Can be changed: C2(1), T	**Calculated:** -	**Access level:** 1
Data type: Integer16	**Dynamic index:** -	**Func. diagram:** -
P-Group: -	**Units group:** -	**Unit selection:** -
Not for motor type: -	**Scaling:** -	**Expert list:** 1
Min	**Max**	**Factory setting**
0	30	1

Description: Sets the parameter filter to commission an infeed unit.

Setting this parameter filters out the parameters that can be written into in the various commissioning steps.

Value:
0: Ready
1: Quick commissioning
2: Power unit commissioning
5: Technological application/units
29: Only Siemens int
30: Parameter reset

Note: The drive can only be powered up outside the drive commissioning (inverter enable). To realize this, this parameter must be set to 0.

For p3900 not equal to 0, at the end of the quick commissioning, this parameter is automatically reset to 0.

Procedure for "Reset parameter": Set p0010 to 30 and p0970 to 1.

p0010 Encoder DO commissioning parameter filter / EncDO com par_filt

ENC

Can be changed: C2(1), T	**Calculated:** -	**Access level:** 1
Data type: Integer16	**Dynamic index:** -	**Func. diagram:** -
P-Group: -	**Units group:** -	**Unit selection:** -
Not for motor type: -	**Scaling:** -	**Expert list:** 1
Min	**Max**	**Factory setting**
0	30	0

Description: Sets the parameter filter to commission an encoder drive object.

Setting this parameter filters out the parameters that can be written into in the various commissioning steps.

For the BOP, this setting also causes the read access operations to be filtered.

Value:
0: Ready
4: Encoder commissioning
5: Technological application/units
29: Only Siemens int
30: Parameter reset

Note: Procedure for "Reset parameter": Set p0010 to 30 and p0970 to 1.

p0010 TB30 commissioning parameter filter / TB30 comm.par_filt

TB30

Can be changed: C2(1), T	**Calculated:** -	**Access level:** 1
Data type: Integer16	**Dynamic index:** -	**Func. diagram:** -
P-Group: -	**Units group:** -	**Unit selection:** -
Not for motor type: -	**Scaling:** -	**Expert list:** 1
Min	**Max**	**Factory setting**
0	30	0

Description: Sets the parameter filter for commissioning a Terminal Board 30 (TB30).

Setting this parameter filters out the parameters that can be written into in the various commissioning steps.

© Siemens AG 2012 All Rights Reserved

For the BOP, this setting also causes the read access operations to be filtered.

Value:
0: Ready
29: Only Siemens int
30: Parameter reset

Dependency: Refer to: p0970

Note: Procedure for "Reset parameter": Set p0010 to 30 and p0970 to 1.

p0010 TM150 commissioning parameter filter / TM150 com par_filt

TM150

Can be changed: C2(1), T	**Calculated:** -	**Access level:** 1
Data type: Integer16	**Dynamic index:** -	**Func. diagram:** -
P-Group: -	**Units group:** -	**Unit selection:** -
Not for motor type: -	**Scaling:** -	**Expert list:** 1
Min	**Max**	**Factory setting**
0	30	0

Description: Sets the parameter filter for commissioning a Terminal Module 150 (TM150).
Setting this parameter filters out the parameters that can be written into in the various commissioning steps.
For the BOP, this setting also causes the read access operations to be filtered.

Value:
0: Ready
29: Only Siemens int
30: Parameter reset

Dependency: Refer to: p0970

Note: Only the following values are possible: p0010 = 0, 30
Procedure for "Reset parameter": Set p0010 to 30 and p0970 to 1.

p0010 TM31 commissioning parameter filter / TM31 comm par_filt

TM31

Can be changed: C2(1), T	**Calculated:** -	**Access level:** 1
Data type: Integer16	**Dynamic index:** -	**Func. diagram:** -
P-Group: -	**Units group:** -	**Unit selection:** -
Not for motor type: -	**Scaling:** -	**Expert list:** 1
Min	**Max**	**Factory setting**
0	30	0

Description: Sets the parameter filter for commissioning a Terminal Module 31 (TM31).
Setting this parameter filters out the parameters that can be written into in the various commissioning steps.
For the BOP, this setting also causes the read access operations to be filtered.

Value:
0: Ready
29: Only Siemens int
30: Parameter reset

Dependency: Refer to: p0970

Note: Only the following values are possible: p0010 = 0, 30
Procedure for "Reset parameter": Set p0010 to 30 and p0970 to 1.

p0010 TM54F commissioning parameter filter / TM54F com par_filt

TM54F_MA

Can be changed: C2(1), T	**Calculated:** -	**Access level:** 1
Data type: Integer16	**Dynamic index:** -	**Func. diagram:** 2847
P-Group: -	**Units group:** -	**Unit selection:** -
Not for motor type: -	**Scaling:** -	**Expert list:** 1
Min	**Max**	**Factory setting**
0	95	0

Description: Sets the parameter filter for commissioning a Terminal Module 54F (TM54F).
Setting this parameter filters out the parameters that can be written into in the various commissioning steps.
For the BOP, this setting also causes the read access operations to be filtered.

© Siemens AG 2012 All Rights Reserved

Value:
0: Ready
29: Only Siemens int
30: Parameter reset
95: Safety Integrated commissioning

Dependency: Refer to: p0970

Note: Procedure for "Reset parameter": Set p0010 to 30 and p0970 to 1.

p0010 Drive commissioning parameter filter / Drv comm. par_filt

VECTOR_G

Can be changed: C2(1), T	**Calculated:** -	**Access level:** 1
Data type: Integer16	**Dynamic index:** -	**Func. diagram:** 2800, 2846
P-Group: -	**Units group:** -	**Unit selection:** -
Not for motor type: -	**Scaling:** -	**Expert list:** 1
Min	**Max**	**Factory setting**
0	10000	1

Description: Sets the parameter filter to commission a drive.

Setting this parameter filters out the parameters that can be written into in the various commissioning steps.

Value:
0: Ready
1: Quick commissioning
2: Power unit commissioning
3: Motor commissioning
4: Encoder commissioning
5: Technological application/units
15: Data sets
17: Basic positioner commissioning
25: Position control commissioning
29: Only Siemens int
30: Parameter reset
95: Safety Integrated commissioning
10000: Ready with immediate feedback signal

Notice: For p0010 = 10000 the following applies:

After the value has been modified, no further parameter modifications can be made and the status is shown in r3996. Modifications can be made again when r3996 = 0.

Note: The drive can only be powered up outside the drive commissioning (inverter enable). To realize this, this parameter must be set to 0.

By setting p3900 to a value other than 0, the quick commissioning is completed, and this parameter is automatically reset to 0.

Procedure for "Reset parameter": Set p0010 to 30 and p0970 to 1.

p0010 = 10000 corresponds to p0010 = 0. Unlike with p0010 = 0, the parameter modification is applied immediately and the calculations are made in the background. Further parameter modifications cannot be made while the calculations are being performed.

p0011 BOP password entry (p0013) / BOP passw ent p13

CU_G130_DP, CU_G130_PN, CU_G150_DP, CU_G150_PN

Can be changed: U, T	**Calculated:** -	**Access level:** 3
Data type: Unsigned16	**Dynamic index:** -	**Func. diagram:** -
P-Group: Functions	**Units group:** -	**Unit selection:** -
Not for motor type: -	**Scaling:** -	**Expert list:** 1
Min	**Max**	**Factory setting**
0	65535	0

Description: Sets the password for the Basic Operator Panel (BOP).

Dependency: Refer to: p0012, p0013

© Siemens AG 2012 All Rights Reserved

p0012 BOP password acknowledgement (p0013) / BOP passw ackn p13

CU_G130_DP, CU_G130_PN, CU_G150_DP, CU_G150_PN	**Can be changed:** U, T	**Calculated:** -	**Access level:** 3
	Data type: Unsigned16	**Dynamic index:** -	**Func. diagram:** -
	P-Group: Functions	**Units group:** -	**Unit selection:** -
	Not for motor type: -	**Scaling:** -	**Expert list:** 1
	Min	**Max**	**Factory setting**
	0	65535	0

Description: Acknowledges the password for the Basic Operator Panel (BOP).

Dependency: Refer to: p0011, p0013

p0013[0...49] BOP user-defined list / BOP list

All objects	**Can be changed:** U, T	**Calculated:** -	**Access level:** 3
	Data type: Unsigned16	**Dynamic index:** -	**Func. diagram:** -
	P-Group: Functions	**Units group:** -	**Unit selection:** -
	Not for motor type: -	**Scaling:** -	**Expert list:** 1
	Min	**Max**	**Factory setting**
	0	65535	0

Description: Sets the required parameters to read and write via the Basic Operator Panel (BOP).
Activation:
1. p0003 = 3 (expert).
2. p0013[0...49] = requested parameter number
3. If required, enter p0011 = password in order to prevent non-authorized de-activation.
4. p0016 = 1 --> activates the selected user-defined list.
De-activation/change:
1. p0003 = 3 (expert).
2. If required, p0012 = p0011, in order to be authorized to change or de-activate the list.
3. If required p0013[0...49] = required parameter number.
4. p0016 = 1 --> activates the modified user-defined list.
5. p0003 = 0 --> de-activates the user-defined list.

Dependency: Refer to: p0009, p0011, p0012, p0976

Note: The following parameters can be read and written on the Control Unit drive object:
- p0003 (access stage)
- p0009 (device commissioning, parameter filter)
- p0012 (BOP password acknowledgement (p0013))
The following applies for the user-defined list:
- password protection is only available on the drive object Control Unit and is valid for all of the drive objects.
- p0013 cannot be included in the user-defined list for all drive objects.
- p0003, p0009, p0011, p0012, p0976 cannot, for the drive object Control Unit, be included in the user-defined list.
- the user-defined list can be cleared and de-activated "restore factory setting".
A value of 0 means: Entry is empty.

p0015 Macro drive object / Macro DO

B_INF, TM150, TM31, VECTOR_G	**Can be changed:** C2(1)	**Calculated:** -	**Access level:** 1
	Data type: Unsigned32	**Dynamic index:** -	**Func. diagram:** -
	P-Group: Commands	**Units group:** -	**Unit selection:** -
	Not for motor type: -	**Scaling:** -	**Expert list:** 1
	Min	**Max**	**Factory setting**
	0	999999	0

Description: Runs the corresponding macro files.
The selected macro file must be available on the memory card/device memory.
Example:
p0015 = 6 --> the macro file PM000006.ACX is run.

© Siemens AG 2012 All Rights Reserved

Dependency: Refer to: p0700, p1000, p1500, r8570

Caution: When executing a specific macro, the corresponding programmed settings are made and become active.

Notice: After the value has been modified, no further parameter modifications can be made and the status is shown in r3996. Modifications can be made again when r3996 = 0.

No errors were issued during quick commissioning (p3900 = 1) when writing to parameters of the QUICK_IBN group!

Note: The macros in the specified directory are displayed in r8570. r8570 is not in the expert list of the commissioning software.

Macros available as standard are described in the technical documentation of the particular product.

The parameter is not influenced by setting the factory setting.

p0015 Macro drive unit / Macro drv unit

CU_G130_DP, CU_G130_PN, CU_G150_DP, CU_G150_PN

Can be changed: C1	**Calculated:** -	**Access level:** 1
Data type: Unsigned32	**Dynamic index:** -	**Func. diagram:** -
P-Group: -	**Units group:** -	**Unit selection:** -
Not for motor type: -	**Scaling:** -	**Expert list:** 1
Min	**Max**	**Factory setting**
0	999999	1

Description: Runs the corresponding macro files.

The selected macro file must be available on the memory card/device memory.

Example:

p0015 = 6 --> the macro file PM000006.ACX is run.

Dependency: Refer to: p0700, p1000, p1500, r8570

Caution: When executing a specific macro, the corresponding programmed settings are made and become active.

Notice: After the value has been modified, no further parameter modifications can be made and the status is shown in r3996. Modifications can be made again when r3996 = 0.

Note: The macros in the specified directory are displayed in r8570. r8570 is not in the expert list of the commissioning software.

Macros available as standard are described in the technical documentation of the particular product.

The parameter is not influenced by setting the factory setting.

p0016 Activate BOP user-defined list / BOP user list act

CU_G130_DP, CU_G130_PN, CU_G150_DP, CU_G150_PN

Can be changed: C1, U, T	**Calculated:** -	**Access level:** 3
Data type: Integer16	**Dynamic index:** -	**Func. diagram:** -
P-Group: -	**Units group:** -	**Unit selection:** -
Not for motor type: -	**Scaling:** -	**Expert list:** 1
Min	**Max**	**Factory setting**
0	1	0

Description: Setting for activating/de-activating the user-defined list for the Basic Operator Panel (BOP).

If p0016 = 1, then it is only possible to access parameters in the parameter list (p0013).

Value:
0: BOP user-defined list de-activated
1: BOP user-defined list activated

Dependency: Refer to: p0011, p0012, p0013

Note: The user-defined list can only be de-activated with p0011 = p0012

r0018 Control Unit firmware version / CU FW version

CU_G130_DP, CU_G130_PN, CU_G150_DP, CU_G150_PN

Can be changed: -	**Calculated:** -	**Access level:** 1
Data type: Unsigned32	**Dynamic index:** -	**Func. diagram:** -
P-Group: -	**Units group:** -	**Unit selection:** -
Not for motor type: -	**Scaling:** -	**Expert list:** 1
Min	**Max**	**Factory setting**
0	4294967295	-

Description: Displays the firmware version of the Control Unit.

Dependency: Refer to: r0128, r0148, r0158, r0197, r0198

© Siemens AG 2012 All Rights Reserved

Note: Example:
The value 1010100 should be interpreted as V01.01.01.00.

r0019.0...14 CO/BO: Control word BOP / STW BOP

CU_G130_DP, CU_G130_PN, CU_G150_DP, CU_G150_PN

Can be changed: -	**Calculated:** -	**Access level:** 3
Data type: Unsigned16	**Dynamic index:** -	**Func. diagram:** 9912
P-Group: Displays, signals	**Units group:** -	**Unit selection:** -
Not for motor type: -	**Scaling:** -	**Expert list:** 1
Min	**Max**	**Factory setting**
-	-	-

Description: Displays the control word for the Basic Operator Panel (BOP).

Bit field:

Bit	Signal name	1 signal	0 signal	FP
00	ON / OFF (OFF1)	ON	OFF (OFF1)	-
01	No coast-down / coast-down (OFF2)	No coast down	Coast down (OFF2)	-
02	No Quick Stop / Quick Stop (OFF3)	No Quick Stop	Quick Stop (OFF3)	-
07	Acknowledge fault (0 -> 1)	Yes	No	-
13	Motorized potentiometer raise	Yes	No	-
14	Motorized potentiometer lower	Yes	No	-

r0020 Speed setpoint smoothed / n_set smth

VECTOR_G

Can be changed: -	**Calculated:** -	**Access level:** 2
Data type: FloatingPoint32	**Dynamic index:** -	**Func. diagram:** 5020, 6799
P-Group: Displays, signals	**Units group:** 3_1	**Unit selection:** p0505
Not for motor type: -	**Scaling:** p2000	**Expert list:** 1
Min	**Max**	**Factory setting**
- [rpm]	- [rpm]	- [rpm]

Description: Displays the currently smoothed speed setpoint at the input of the speed controller or U/f characteristic (after the interpolator).

Dependency: Refer to: r0060

Note: Smoothing time constant = 100 ms
The signal is not suitable as a process quantity and may only be used as a display quantity.
The speed setpoint is available smoothed (r0020) and unsmoothed (r0060).

r0021 CO: Actual speed smoothed / n_act smooth

VECTOR_G

Can be changed: -	**Calculated:** -	**Access level:** 2
Data type: FloatingPoint32	**Dynamic index:** -	**Func. diagram:** 4710, 6799
P-Group: Displays, signals	**Units group:** 3_1	**Unit selection:** p0505
Not for motor type: -	**Scaling:** p2000	**Expert list:** 1
Min	**Max**	**Factory setting**
- [rpm]	- [rpm]	- [rpm]

Description: Displays the smoothed actual value of the motor speed.
For U/f control and when slip compensation is deactivated (see p1335), the synchronous speed to the output frequency is shown in r0021.

Dependency: Refer to: r0022, r0063

Note: Smoothing time constant = 100 ms
The signal is not suitable as a process quantity and may only be used as a display quantity.
The speed actual value is available smoothed (r0021, r0022) and unsmoothed (r0063).
For U/f control, the mechanical speed calculated from the output frequency and the slip is shown in r0063[2] even if slip compensation is deactivated.

© Siemens AG 2012 All Rights Reserved

r0022 Speed actual value rpm smoothed / n_act rpm smooth

VECTOR_G

Can be changed: -	**Calculated:** -	**Access level:** 3
Data type: FloatingPoint32	**Dynamic index:** -	**Func. diagram:** 6799
P-Group: Displays, signals	**Units group:** -	**Unit selection:** -
Not for motor type: -	**Scaling:** p2000	**Expert list:** 1
Min	**Max**	**Factory setting**
- [rpm]	- [rpm]	- [rpm]

Description: Displays the smoothed actual value of the motor speed.

r0022 is identical to r0021, however, it always has units of rpm and contrary to r0021 cannot be changed over.

For U/f control and when slip compensation is deactivated (see p1335), the synchronous speed to the output frequency is shown in r0022.

Dependency: Refer to: r0021, r0063

Note: Smoothing time constant = 100 ms

The signal is not suitable as a process quantity and may only be used as a display quantity.

The speed actual value is available smoothed (r0021, r0022) and unsmoothed (r0063).

For U/f control, the mechanical speed calculated from the output frequency and the slip is shown in r0063[2] even if slip compensation is deactivated.

r0024 Output frequency smoothed / f_outp smooth

VECTOR_G

Can be changed: -	**Calculated:** -	**Access level:** 3
Data type: FloatingPoint32	**Dynamic index:** -	**Func. diagram:** 1690, 5300, 5730, 6799
P-Group: Displays, signals	**Units group:** -	**Unit selection:** -
Not for motor type: -	**Scaling:** p2000	**Expert list:** 1
Min	**Max**	**Factory setting**
- [Hz]	- [Hz]	- [Hz]

Description: Displays the smoothed converter frequency.

Dependency: Refer to: r0066

Note: Smoothing time constant = 100 ms

The signal is not suitable as a process quantity and may only be used as a display quantity.

The output frequency is available smoothed (r0024) and unsmoothed (r0066).

r0025 CO: Output voltage smoothed / U_outp smooth

VECTOR_G

Can be changed: -	**Calculated:** -	**Access level:** 2
Data type: FloatingPoint32	**Dynamic index:** -	**Func. diagram:** 1690, 5730, 6799
P-Group: Displays, signals	**Units group:** -	**Unit selection:** -
Not for motor type: -	**Scaling:** p2001	**Expert list:** 1
Min	**Max**	**Factory setting**
- [Vrms]	- [Vrms]	- [Vrms]

Description: Displays the smoothed output voltage of the power unit.

Dependency: Refer to: r0072

Note: Smoothing time constant = 100 ms

The signal is not suitable as a process quantity and may only be used as a display quantity.

The output voltage is available smoothed (r0025) and unsmoothed (r0072).

© Siemens AG 2012 All Rights Reserved

r0026 CO: DC link voltage smoothed / Vdc smooth

B_INF

Can be changed: -	**Calculated:** -	**Access level:** 2
Data type: FloatingPoint32	**Dynamic index:** -	**Func. diagram:** 5730, 6799, 8750, 8850, 8950
P-Group: Displays, signals	**Units group:** -	**Unit selection:** -
Not for motor type: -	**Scaling:** p2001	**Expert list:** 1
Min	**Max**	**Factory setting**
- [V]	- [V]	- [V]

Description: Displays the smoothed actual value of the DC link voltage.

Dependency: Refer to: r0070

Notice: This smoothed signal is not suitable for diagnostics or evaluation of dynamic operations. In this case, the unsmoothed value should be used.

Note: A_INF, B_INF, S_INF: smoothing time constant = 300 ms

The signal is not suitable as a process quantity and may only be used as a display quantity.

The DC link voltage is available smoothed (r0026) and unsmoothed (r0070).

r0026 CO: DC link voltage smoothed / Vdc smooth

VECTOR_G

Can be changed: -	**Calculated:** -	**Access level:** 2
Data type: FloatingPoint32	**Dynamic index:** -	**Func. diagram:** 6799, 8750, 8850, 8950
P-Group: Displays, signals	**Units group:** -	**Unit selection:** -
Not for motor type: -	**Scaling:** p2001	**Expert list:** 1
Min	**Max**	**Factory setting**
- [V]	- [V]	- [V]

Description: Displays the smoothed actual value of the DC link voltage.

Dependency: Refer to: r0070

Notice: For SINAMICS S120 AC Drive (AC/AC) the following applies:

When measuring a DC link voltage < 200 V, for the Power Module (e.g. PM340) a valid measured value is not supplied. In this case, when an external 24 V power supply is connected, a value of approx. 24 V is displayed in the display parameter.

Note: SERVO, VECTOR: Smoothing time constant = 100 ms

The signal is not suitable as a process quantity and may only be used as a display quantity.

The DC link voltage is available smoothed (r0026) and unsmoothed (r0070).

r0027 CO: Absolute actual current smoothed / I_act abs val smth

B_INF

Can be changed: -	**Calculated:** -	**Access level:** 2
Data type: FloatingPoint32	**Dynamic index:** -	**Func. diagram:** 8750
P-Group: Displays, signals	**Units group:** 6_4	**Unit selection:** p0505
Not for motor type: -	**Scaling:** p2002	**Expert list:** 1
Min	**Max**	**Factory setting**
- [A]	- [A]	- [A]

Description: Displays the smoothed absolute actual current value.

Dependency: Refer to: r0068

Notice: This smoothed signal is not suitable for diagnostics or evaluation of dynamic operations. In this case, the unsmoothed value should be used.

For Basic Line Modules of chassis format, the displayed value is invalid as these units do not have any current sensing.

Note: Smoothing time constant = 300 ms

The signal is not suitable as a process quantity and may only be used as a display quantity.

The absolute current actual value is available smoothed (r0027) and unsmoothed (r0068).

© Siemens AG 2012 All Rights Reserved

r0027 CO: Absolute actual current smoothed / I_act abs val smth

VECTOR_G	**Can be changed:** -	**Calculated:** -	**Access level:** 2
	Data type: FloatingPoint32	**Dynamic index:** -	**Func. diagram:** 5730, 6799, 8850, 8950
	P-Group: Displays, signals	**Units group:** -	**Unit selection:** -
	Not for motor type: -	**Scaling:** p2002	**Expert list:** 1
	Min - [Arms]	**Max** - [Arms]	**Factory setting** - [Arms]

Description: Displays the smoothed absolute actual current value.

Dependency: Refer to: r0068

Notice: This smoothed signal is not suitable for diagnostics or evaluation of dynamic operations. In this case, the unsmoothed value should be used.

Note: A_INF, S_INF, VECTOR: Smoothing time constant = 300 ms
SERVO: Smoothing time constant = 100 ms
The signal is not suitable as a process quantity and may only be used as a display quantity.
The absolute current actual value is available smoothed (r0027) and unsmoothed (r0068).

r0028 Modulation depth smoothed / Mod_depth smth

VECTOR_G	**Can be changed:** -	**Calculated:** -	**Access level:** 3
	Data type: FloatingPoint32	**Dynamic index:** -	**Func. diagram:** 5730, 6799, 8950
	P-Group: Displays, signals	**Units group:** -	**Unit selection:** -
	Not for motor type: -	**Scaling:** p2002	**Expert list:** 1
	Min - [%]	**Max** - [%]	**Factory setting** - [%]

Description: Displays the smoothed actual value of the modulation depth.

Dependency: Refer to: r0074

Note: A_INF: Smoothing time constant = 300 ms
SERVO, VECTOR: Smoothing time constant = 100 ms
The signal is not suitable as a process quantity and may only be used as a display quantity.
The modulation depth is available smoothed (r0028) and unsmoothed (r0074).

r0029 Current actual value field-generating smoothed / Id_act smooth

VECTOR_G	**Can be changed:** -	**Calculated:** -	**Access level:** 3
	Data type: FloatingPoint32	**Dynamic index:** -	**Func. diagram:** 5730, 6799
	P-Group: Displays, signals	**Units group:** -	**Unit selection:** -
	Not for motor type: -	**Scaling:** p2002	**Expert list:** 1
	Min - [Arms]	**Max** - [Arms]	**Factory setting** - [Arms]

Description: Displays the smoothed field-generating actual current.

Dependency: Refer to: r0076

Note: SERVO: Smoothing time constant = 100 ms
VECTOR: Smoothing time constant = 300 ms
The signal is not suitable as a process quantity and may only be used as a display quantity.
The field-generating current actual value is available smoothed (r0029) and unsmoothed (r0076).

© Siemens AG 2012 All Rights Reserved

r0030 Current actual value torque-generating smoothed / Iq_act smooth

VECTOR_G	**Can be changed:** -	**Calculated:** -	**Access level:** 3
	Data type: FloatingPoint32	**Dynamic index:** -	**Func. diagram:** 5730, 6799
	P-Group: Displays, signals	**Units group:** -	**Unit selection:** -
	Not for motor type: -	**Scaling:** p2002	**Expert list:** 1
	Min - [Arms]	**Max** - [Arms]	**Factory setting** - [Arms]

Description: Displays the smoothed torque-generating actual current.

Dependency: Refer to: r0078

Note: SERVO: Smoothing time constant = 100 ms

VECTOR: Smoothing time constant = 300 ms

The signal is not suitable as a process quantity and may only be used as a display quantity.

The following applies for SERVO:

The torque-generating current actual value is available smoothed (r0030 with 100 ms, r0078[1] with p0045) and unsmoothed (r0078[0]).

The following applies for VECTOR:

The torque-generating current actual value is available smoothed (r0030 with 300 ms) and unsmoothed (r0078).

r0031 Actual torque smoothed / M_act smooth

VECTOR_G	**Can be changed:** -	**Calculated:** -	**Access level:** 2
	Data type: FloatingPoint32	**Dynamic index:** -	**Func. diagram:** 5730, 6799
	P-Group: Displays, signals	**Units group:** 7_1	**Unit selection:** p0505
	Not for motor type: -	**Scaling:** p2003	**Expert list:** 1
	Min - [Nm]	**Max** - [Nm]	**Factory setting** - [Nm]

Description: Displays the smoothed torque actual value.

Dependency: Refer to: r0080

Note: Smoothing time constant = 100 ms

The signal is not suitable as a process quantity and may only be used as a display quantity.

The active current actual value is available smoothed (r0031) and unsmoothed (r0080).

r0032 CO: Active power actual value smoothed / P_actv_act smth

B_INF	**Can be changed:** -	**Calculated:** -	**Access level:** 2
	Data type: FloatingPoint32	**Dynamic index:** -	**Func. diagram:** 5730, 6799, 8750, 8850, 8950
	P-Group: Displays, signals	**Units group:** 14_10	**Unit selection:** p0505
	Not for motor type: -	**Scaling:** r2004	**Expert list:** 1
	Min - [kW]	**Max** - [kW]	**Factory setting** - [kW]

Description: Displays the smoothed actual value of the active power.

Dependency: Refer to: r0082

Notice: This smoothed signal is not suitable for diagnostics or evaluation of dynamic operations. In this case, the unsmoothed value should be used.

For Basic Line Modules of chassis format, the displayed value is invalid as these units do not have any current sensing.

Note: Significance for the drive: Power output at the motor shaft

Significance for the infeed: Line power drawn

For A_INF, B_INF and S_INF the following applies:

The active power is available smoothed (r0032 with 300 ms) and unsmoothed (r0082).

The following applies for SERVO:

The active power is available smoothed (r0032 with 100 ms, r0082[1] with p0045) and unsmoothed (r0082[0]).

© Siemens AG 2012 All Rights Reserved

For VECTOR and VECTORMV, the following applies:
The active power is available smoothed (r0032 with 100 ms) and unsmoothed (r0082).

r0032 CO: Active power actual value smoothed / P_actv_act smth

VECTOR_G

Can be changed: -	**Calculated:** -	**Access level:** 2
Data type: FloatingPoint32	**Dynamic index:** -	**Func. diagram:** 5730, 6799, 8750, 8850, 8950
P-Group: Displays, signals	**Units group:** 14_10	**Unit selection:** p0505
Not for motor type: -	**Scaling:** r2004	**Expert list:** 1
Min - [kW]	**Max** - [kW]	**Factory setting** - [kW]

Description: Displays the smoothed actual value of the active power.

Dependency: Refer to: r0082

Notice: This smoothed signal is not suitable for diagnostics or evaluation of dynamic operations. In this case, the unsmoothed value should be used.

Note: Significance for the drive: Power output at the motor shaft
Significance for the infeed: Line power drawn
For A_INF, B_INF and S_INF the following applies:
The active power is available smoothed (r0032 with 300 ms) and unsmoothed (r0082).
The following applies for SERVO:
The active power is available smoothed (r0032 with 100 ms, r0082[1] with p0045) and unsmoothed (r0082[0]).
For VECTOR and VECTORMV, the following applies:
The active power is available smoothed (r0032 with 100 ms) and unsmoothed (r0082).

r0033 Torque utilization smoothed / M_util smooth

VECTOR_G

Can be changed: -	**Calculated:** -	**Access level:** 3
Data type: FloatingPoint32	**Dynamic index:** -	**Func. diagram:** 8012
P-Group: Displays, signals	**Units group:** -	**Unit selection:** -
Not for motor type: -	**Scaling:** PERCENT	**Expert list:** 1
Min - [%]	**Max** - [%]	**Factory setting** - [%]

Description: Displays the smoothed torque utilization as a percentage.
The torque utilization is obtained from the required smoothed torque in reference to the torque limit, scaled using p2196.

Note: Smoothing time constant = 100 ms
The signal is not suitable as a process quantity and may only be used as a display quantity.
The torque utilization is available smoothed (r0033) and unsmoothed (r0081).
For M_set total (r0079) > 0, the following applies:
- Required torque = M_set total
- Actual torque limit = M_max upper effective (r1538)
For M_set total (r0079) <= 0, the following applies:
- Required torque = - M_set total
- Actual torque limit = - M_max lower effective (r1539)
For the actual torque limit = 0, the following applies: r0033 = 100 %
For the actual torque limit < 0, the following applies: r0033 = 0 %

© Siemens AG 2012 All Rights Reserved

r0034 CO: Motor utilization / Motor utilization

VECTOR_G

Can be changed: -	**Calculated:** -	**Access level:** 2
Data type: FloatingPoint32	**Dynamic index:** -	**Func. diagram:** 8017
P-Group: Displays, signals	**Units group:** -	**Unit selection:** -
Not for motor type: ASM, REL, FEM	**Scaling:** PERCENT	**Expert list:** 1
Min - [%]	**Max** - [%]	**Factory setting** - [%]

Description: Displays the motor utilization from motor temperature model 1 (I2t) or 3.

Dependency: The motor utilization is only determined for permanent-magnet synchronous motors when the motor temperature model 1 (I2t) or 3 is activated.

For motor temperature model 1 (I2t) (p0612.0 = 1), the following applies:

- r0034 = (motor model temperature - 40 K) / (p0605 - 40 K) * 100 %

For motor temperature model 3 (p0612.2 = 1), the following applies:

- r0034 = (motor model temperature - p0613) / (p5390 - p0613) * 100 %

Refer to: p0611, p0612, p0615

Notice: After the drive is switched on, the system starts to determine the motor temperature with an assumed model value. This means that the value for the motor utilization is only valid after a stabilization time.

Note: Smoothing time constant = 100 ms

The signal is not suitable as a process quantity and may only be used as a display quantity.

For r0034 = -200.0 %, the following applies:

The value is invalid (e.g. the motor temperature model is not activated or has been incorrectly parameterized).

r0035 CO: Temperature input / Temp_input

B_INF

Can be changed: -	**Calculated:** -	**Access level:** 2
Data type: FloatingPoint32	**Dynamic index:** -	**Func. diagram:** 8750
P-Group: Displays, signals	**Units group:** 21_1	**Unit selection:** p0505
Not for motor type: -	**Scaling:** p2006	**Expert list:** 1
Min - [°C]	**Max** - [°C]	**Factory setting** - [°C]

Description: Displays the temperature currently measured at X21 (booksize) or X41 (chassis).

For a BLM with internal Braking Module, a bimetallic sensor must be connected up to monitor the temperature of the braking resistor. The temperature sensor type is indicated using p0601 and cannot be changed for the existing internal Braking Module.

Temperature within permissible limit values: r0035 = -50°C

Temperature outside the permissible limit values: r0035 = 250°C

Dependency: Refer to: F06907, F06908

Notice: The function in r0192.11 must be available in order to obtain a correct display.

Note: For r0035 equal to -200.0 °C, the following applies:

- "no sensor" selected in p0601!

For r0035 equal to -300.0 °C, the following applies:

- a KTY84 is selected in p0601 but is not connected!
- the temperature display is not valid (temperature sensor error)!

r0035 CO: Motor temperature / Mot temp

VECTOR_G

Can be changed: -	**Calculated:** -	**Access level:** 2
Data type: FloatingPoint32	**Dynamic index:** -	**Func. diagram:** 7008, 8016, 8017
P-Group: Displays, signals	**Units group:** 21_1	**Unit selection:** p0505
Not for motor type: -	**Scaling:** p2006	**Expert list:** 1
Min - [°C]	**Max** - [°C]	**Factory setting** - [°C]

Description: Displays the actual temperature in the motor.

© Siemens AG 2012 All Rights Reserved

Note: For r0035 not equal to -200.0 °C, the following applies:
- this temperature display is valid.
- a KTY sensor is connected.
- the thermal model for the induction motor is activated (p0612 bit 1 = 1 and temperature sensor de-activated: p0600 = 0 or p0601 = 0).

For r0035 equal to -200.0 °C, the following applies:
- this temperature display is not valid (temperature sensor error).
- A PTC sensor or bimetallic NC contact is connected.
- the temperature sensor of the synchronous motor is de-activated (p0600 = 0 or p0601 = 0).

r0036 CO: Power unit overload I2t / PU overload I2t

B_INF, VECTOR_G

Can be changed: -	**Calculated:** -	**Access level:** 3
Data type: FloatingPoint32	**Dynamic index:** -	**Func. diagram:** 8014
P-Group: Displays, signals	**Units group:** -	**Unit selection:** -
Not for motor type: -	**Scaling:** PERCENT	**Expert list:** 1
Min	**Max**	**Factory setting**
- [%]	- [%]	- [%]

Description: Displays the power unit overload determined using the I2t calculation.

A current reference value is defined for the I2t monitoring of the power unit. It represents the current that can be conducted by the power unit without any influence of the switching losses (e.g. the continuously permissible current of the capacitors, inductances, busbars, etc.).

If the I2t reference current of the power unit is not exceeded, then an overload (0 %) is not displayed.

In the other case, the degree of thermal overload is calculated, whereby 100% results in a trip.

Dependency: Refer to: p0290, p0294

Refer to: F30005

r0037[0...19] CO: Power unit temperatures / PU temperatures

B_INF, VECTOR_G

Can be changed: -	**Calculated:** -	**Access level:** 3
Data type: FloatingPoint32	**Dynamic index:** -	**Func. diagram:** 8014
P-Group: Displays, signals	**Units group:** 21_1	**Unit selection:** p0505
Not for motor type: -	**Scaling:** p2006	**Expert list:** 1
Min	**Max**	**Factory setting**
- [°C]	- [°C]	- [°C]

Description: Displays the temperatures in the power unit.

Index:
[0] = Inverter, maximum value
[1] = Depletion layer maximum value
[2] = Rectifier maximum value
[3] = Air intake
[4] = Interior of power unit
[5] = Inverter 1
[6] = Inverter 2
[7] = Inverter 3
[8] = Inverter 4
[9] = Inverter 5
[10] = Inverter 6
[11] = Rectifier 1
[12] = Rectifier 2
[13] = Depletion layer 1
[14] = Depletion layer 2
[15] = Depletion layer 3
[16] = Depletion layer 4
[17] = Depletion layer 5
[18] = Depletion layer 6
[19] = Cooling unit liquid intake

© Siemens AG 2012 All Rights Reserved

Note: The value of -200 indicates that there is no measuring signal.
r0037[0]: Maximum value of the inverter temperatures (r0037[5...10]).
r0037[1]: Maximum value of the depletion layer temperatures (r0037[13...18]).
r0037[2]: Maximum value of the rectifier temperatures (r0037[11...12]).
The maximum value is the temperature of the hottest inverter, depletion layer, or rectifier.

r0037[0...1] Control Unit temperature / CU temp

CU_G130_DP, CU_G130_PN, CU_G150_DP, CU_G150_PN

Can be changed: -	**Calculated:** -	**Access level:** 3
Data type: FloatingPoint32	**Dynamic index:** -	**Func. diagram:** -
P-Group: Displays, signals	**Units group:** -	**Unit selection:** -
Not for motor type: -	**Scaling:** p2006	**Expert list:** 1
Min	**Max**	**Factory setting**
- [°C]	- [°C]	- [°C]

Description: Displays the measured Control Unit temperature.
An appropriate message is output when the permitted operating temperature is exceeded.

Index: [0] = Actual measured value
[1] = Maximum measured value

Dependency: Refer to: A01009

Note: The value of -200 indicates that there is no measuring signal.

r0038 Power factor smoothed / Cos phi smooth

VECTOR_G

Can be changed: -	**Calculated:** -	**Access level:** 3
Data type: FloatingPoint32	**Dynamic index:** -	**Func. diagram:** 6799, 8850, 8950
P-Group: Displays, signals	**Units group:** -	**Unit selection:** -
Not for motor type: -	**Scaling:** -	**Expert list:** 1
Min	**Max**	**Factory setting**
-	-	-

Description: Displays the smoothed actual power factor.

Notice: For infeed units, the following applies:
For active powers < 25 % of the rated power, this does not provide any useful information.

Note: Smoothing time constant = 300 ms
The signal is not suitable as a process quantity and may only be used as a display quantity.
Meaning for motor:
- power factor of the basic fundamental signals at the converter output.
Meaning for infeed:
- Power factor at the connection point (r3470, r3471)

r0039[0...2] Energy display / Energy displ

VECTOR_G

Can be changed: -	**Calculated:** -	**Access level:** 2
Data type: FloatingPoint32	**Dynamic index:** -	**Func. diagram:** -
P-Group: Displays, signals	**Units group:** -	**Unit selection:** -
Not for motor type: -	**Scaling:** -	**Expert list:** 1
Min	**Max**	**Factory setting**
- [kWh]	- [kWh]	- [kWh]

Description: Displays the energy values at the output terminals of the power unit.

Index: [0] = Energy balance (sum)
[1] = Energy drawn
[2] = Energy fed back

Dependency: Refer to: p0040

Note: Re index 0:
Sum of the energy drawn and energy that is fed back.

© Siemens AG 2012 All Rights Reserved

p0040 Reset energy consumption display / Energy usage reset

VECTOR_G

Can be changed: U, T	**Calculated:** -	**Access level:** 2
Data type: Unsigned8	**Dynamic index:** -	**Func. diagram:** -
P-Group: Displays, signals	**Units group:** -	**Unit selection:** -
Not for motor type: -	**Scaling:** -	**Expert list:** 1
Min	**Max**	**Factory setting**
0	1	0

Description: Setting to reset the display in r0039 and r0041.
Procedure:
Set p0040 = 0 --> 1
The displays are reset and the parameter is automatically set to zero.

Dependency: Refer to: r0039

r0041 Energy consumption saved / Energy cons saved

VECTOR_G

Can be changed: -	**Calculated:** -	**Access level:** 2
Data type: FloatingPoint32	**Dynamic index:** -	**Func. diagram:** -
P-Group: Displays, signals	**Units group:** -	**Unit selection:** -
Not for motor type: -	**Scaling:** -	**Expert list:** 1
Min	**Max**	**Factory setting**
- [kWh]	- [kWh]	- [kWh]

Description: Displays the saved energy referred to 100 operating hours.

Dependency: Refer to: p0040

Note: This display is used for a fluid-flow machine.
The flow characteristic is entered into p3320 ... p3329.
For an operating time of below 100 hours, the display is interpolated up to 100 hours.

p0045 Display values smoothing time constant / Disp_val T_smooth

VECTOR_G

Can be changed: U, T	**Calculated:** -	**Access level:** 2
Data type: FloatingPoint32	**Dynamic index:** -	**Func. diagram:** 4715, 5610, 5730, 6714, 8012
P-Group: -	**Units group:** -	**Unit selection:** -
Not for motor type: -	**Scaling:** -	**Expert list:** 1
Min	**Max**	**Factory setting**
0.00 [ms]	10000.00 [ms]	1.00 [ms]

Description: Sets the smoothing time constant for the following display values:
SERVO: r0078[1], r0079[1], r0081 (calculated from the quantities smoothed with p0045), r0082[1].
VECTOR: r0063[1], r0068[1], r0080[1], r0082[1].

r0046.0...29 CO/BO: Missing enable sig / Missing enable sig

B_INF

Can be changed: -	**Calculated:** -	**Access level:** 1
Data type: Unsigned32	**Dynamic index:** -	**Func. diagram:** 8734
P-Group: Displays, signals	**Units group:** -	**Unit selection:** -
Not for motor type: -	**Scaling:** -	**Expert list:** 1
Min	**Max**	**Factory setting**
-	-	-

Description: Displays missing enable signals that are preventing the closed-loop infeed control from being commissioned.

Bit field:

Bit	Signal name	1 signal	0 signal	FP
00	OFF1 enable missing	Yes	No	-
01	OFF2 enable missing	Yes	No	-
08	EP terminals enable missing	Yes	No	-
16	OFF1 enable internal missing	Yes	No	-
17	OFF2 enable internal missing	Yes	No	-

© Siemens AG 2012 All Rights Reserved

26	Infeed inactive or not operational	Yes	No	-
29	Cooling unit ready signal missing	Yes	No	-

Dependency: Refer to: r0002

Note: The value r0046 = 0 indicates that all enable signals for the infeed are present.

Bit 00 = 1 (enable signal missing), if:

- the signal source in p0840 is a 0 signal.
- there is a "switching on inhibited".

Bit 01 = 1 (enable signal missing), if:

- the signal source in p0844 or p0845 is a 0 signal.

Bit 16 = 1 (enable signal missing), if:

- there is an OFF1 fault response. The system is only enabled if the fault is removed and was acknowledged and the "switching on inhibited" withdrawn with OFF1 = 0.

Bit 17 = 1 (enable signal missing), if:

- the commissioning mode is selected (p0009 > 0 or p0010 > 0) or there is an OFF2 fault response or the OFF1 signal source (p0840) is changed.

Bit 26 = 1 (enable signal missing), if:

- the infeed is inactive (p0105 = 0) or is not operational (r7850[DO-Index]=0).

Bit 29 = 1 (enable signal missing), if:

- the cooling unit ready signal via BI: p0266[1] missing.

r0046.0...31 CO/BO: Missing enable sig / Missing enable sig

VECTOR_G

Can be changed: -	**Calculated:** -	**Access level:** 1
Data type: Unsigned32	**Dynamic index:** -	**Func. diagram:** 2634
P-Group: Displays, signals	**Units group:** -	**Unit selection:** -
Not for motor type: -	**Scaling:** -	**Expert list:** 1
Min	**Max**	**Factory setting**
-	-	-

Description: Displays missing enable signals that are preventing the closed-loop drive control from being commissioned.

Bit field:

Bit	Signal name	1 signal	0 signal	FP
00	OFF1 enable missing	Yes	No	-
01	OFF2 enable missing	Yes	No	-
02	OFF3 enable missing	Yes	No	-
03	Operation enable missing	Yes	No	-
04	Armature short-circuit / DC braking, enable missing	Yes	No	7014, 7016
05	STOP2 enable missing	Yes	No	-
06	STOP1 enable missing	Yes	No	-
08	Safety enable missing	Yes	No	-
09	Infeed enable missing	Yes	No	-
10	Ramp-function generator enable missing	Yes	No	-
11	Ramp-function generator start missing	Yes	No	-
12	Setpoint enable missing	Yes	No	-
16	OFF1 enable internal missing	Yes	No	-
17	OFF2 enable internal missing	Yes	No	-
18	OFF3 enable internal missing	Yes	No	-
19	Pulse enable internal missing	Yes	No	-
20	Armature short-circuit/DC braking internal enable missing	Yes	No	7014, 7016
21	STOP2 enable internal missing	Yes	No	-
22	STOP1 enable internal missing	Yes	No	-
25	Function bypass active	Yes	No	-
26	Drive inactive or not operational	Yes	No	-
27	De-magnetizing not completed	Yes	No	-
28	Brake open missing	Yes	No	-
29	Cooling unit ready signal missing	Yes	No	-
30	Speed controller inhibited	Yes	No	-
31	Jog setpoint active	Yes	No	-

Dependency: Refer to: r0002

© Siemens AG 2012 All Rights Reserved

Note: The value r0046 = 0 indicates that all enable signals for this drive are present.

Bit 00 = 1 (enable signal missing), if:

- the signal source in p0840 is a 0 signal.
- there is a "switching on inhibited".

Bit 01 = 1 (enable signal missing), if:

- the signal source in p0844 or p0845 is a 0 signal.

Bit 02 = 1 (enable signal missing), if:

- the signal source in p0848 or p0849 is a 0 signal.

Bit 03 = 1 (enable signal missing), if:

- the signal source in p0852 is a 0 signal.

Bit 04 =1 (armature short-circuit active), if:

- the signal source in p1230 has a 1 signal

Bit 05, Bit 06: Being prepared

Bit 08 = 1 (enable signal missing), if:

- safety functions have been enabled and STO is active.

STO selected via terminals:

- the pulse enable via terminal EP is missing (booksize: X21, chassis: X41), or the signal source in p9620 is for a 0 signal.

STO selected via PROFIsafe or TM54F:

- A safety-relevant signal is present with a STOP A response.

Bit 09 = 1 (enable signal missing), if:

- the signal source in p0864 is a 0 signal.

Bit 10 = 1 (enable signal missing), if:

- the signal source in p1140 is a 0 signal.

Bit 11 = 1 (enable signal missing) if the speed setpoint is frozen, because:

- the signal source in p1141 is a 0 signal.
- the speed setpoint is entered from jogging and the two signal sources for jogging, bit 0 (p1055) and bit 1 (p1056) have a 1 signal.

Bit 12 = 1 (enable signal missing), if:

- the signal source in p1142 is a 0 signal.
- When activating the function module "basic positioner" (r0108.4 = 1), the signal source in p1142 is set to a 0 signal.

Bit 16 = 1 (enable signal missing), if:

- there is an OFF1 fault response. The system is only enabled if the fault is removed and was acknowledged and the "switching on inhibited" withdrawn with OFF1 = 0.

Bit 17 = 1 (enable signal missing), if:

- commissioning mode is selected (p0009 > 0 or p0010 > 0).
- there is an OFF2 fault response.
- the drive is inactive (p0105 = 0) or is not operational (r7850[DO-Index]=0).

Bit 18 = 1 (enable signal missing), if:

- OFF3 has still not been completed or an OFF3 fault response is present.

Bit 19 = 1 (internal pulse enable missing), if:

- synchronization is running between the basic clock cycle, DRIVE-CLiQ clock cycle and application clock cycle.

Bit 20 =1 (internal armature short-circuit active), if:

- the drive is not in the state "S4: Operation" or "S5x" (refer to function diagram 2610).
- the internal pulse enable is missing (r0046.19 = 0).

Bit 21 = 1 (enable signal missing), if:

The pulses have been enabled and the speed setpoint has still not been enabled, because:

- the holding brake opening time (p1216) has still not expired.
- the motor has still not been magnetized (induction motor).
- the encoder has not been calibrated (U/f vector and synchronous motor)

Bit 22: Being prepared

Bit 26 = 1 (enable signal missing), if:

- the drive is inactive (p0105 = 0) or is not operational (r7850[DO-Index]=0).

© Siemens AG 2012 All Rights Reserved

- All power units of a parallel connection are deactivated (p0125, p0895).
Bit 27 = 1 (enable signal missing), if:
- de-magnetizing has still not been completed (only for vector).
Bit 28 = 1 (enable signal missing), if:
- the holding brake is closed or has still not been opened.
Bit 29 = 1 (enable signal missing), if:
- the cooling unit ready signal via BI: p0266[1] missing.
Bit 30 = 1 (speed controller inhibited), if one of the following reasons is present:
- A 0 signal is available via BI: p0856.
- the function generator with current input is active.
- the measuring function "current controller reference frequency characteristic" is active.
- the pole position identification is active.
- motor data identification is active (only certain steps).
Bit 31 = 1 (enable signal missing), if:
- the speed setpoint from jog 1 or 2 is entered.

r0047 Motor data identification and speed controller optimization / MotID and n_opt

VECTOR_G

Can be changed: -	**Calculated:** -	**Access level:** 1
Data type: Integer16	**Dynamic index:** -	**Func. diagram:** -
P-Group: Displays, signals	**Units group:** -	**Unit selection:** -
Not for motor type: -	**Scaling:** -	**Expert list:** 1
Min	**Max**	**Factory setting**
0	300	-

Description: Displays the actual status for the motor data identification (stationary measurement) and the speed/velocity controller optimization (rotating measurement).

Value:
0: No measurement
115: Measurement q leakage inductance (part 2)
120: Speed controller optimization (vibration test)
140: Calculate speed controller setting
150: Measurement, moment of inertia
170: Measurement, magnetizing current and saturation characteristic
190: Speed encoder test
195: Measurement q leakage inductance (part 1)
200: Rotating measurement selected
210: Pole position identification selected
220: identification, leakage inductance
230: Identification, rotor time constant
240: Identification, stator inductance
250: Identification, stator inductance LQLD
270: Identification, stator resistance
290: Identification, valve lockout time
300: Stationary measurement selected

Note: Re r0047 = 300:
This value is also displayed if encoder calibration p1990 is selected.

r0049[0...3] Motor data set/encoder data set effective / MDS/EDS effective

VECTOR_G

Can be changed: -	**Calculated:** -	**Access level:** 2
Data type: Unsigned8	**Dynamic index:** -	**Func. diagram:** 8565
P-Group: Displays, signals	**Units group:** -	**Unit selection:** -
Not for motor type: -	**Scaling:** -	**Expert list:** 1
Min	**Max**	**Factory setting**
-	-	-

Description: Displays the effective Motor Data Set (MDS) and the effective Encoder Data Sets (EDS).

Index:
[0] = Motor Data Set MDS effective
[1] = Encoder 1 Encoder Data Set EDS effective

© Siemens AG 2012 All Rights Reserved

[2] = Encoder 2 Encoder Data Set EDS effective
[3] = Encoder 3 Encoder Data Set EDS effective

Dependency: Refer to: p0186, p0187, p0188, p0189, r0838

Note: Value 99 means the following: No encoder assigned (not configured).

r0050.0...3 CO/BO: Command Data Set CDS effective / CDS effective

B_INF, VECTOR_G

Can be changed: -	**Calculated:** -	**Access level:** 2
Data type: Unsigned8	**Dynamic index:** -	**Func. diagram:** 8560
P-Group: Displays, signals	**Units group:** -	**Unit selection:** -
Not for motor type: -	**Scaling:** -	**Expert list:** 1
Min	**Max**	**Factory setting**
-	-	-

Description: Displays the effective Command Data Set (CDS).

Bit field:

Bit	Signal name	1 signal	0 signal	FP
00	CDS eff., bit 0	ON	OFF	-
01	CDS eff., bit 1	ON	OFF	-
02	CDS eff., bit 2	ON	OFF	-
03	CDS eff., bit 3	ON	OFF	-

Dependency: Refer to: p0810, p0811, r0836

Note: The Command Data Set selected using a binector input (e.g. p0810) is displayed using r0836.

r0051.0...4 CO/BO: Drive Data Set DDS effective / DDS effective

ENC, VECTOR_G

Can be changed: -	**Calculated:** -	**Access level:** 2
Data type: Unsigned8	**Dynamic index:** -	**Func. diagram:** -
P-Group: Displays, signals	**Units group:** -	**Unit selection:** -
Not for motor type: -	**Scaling:** -	**Expert list:** 1
Min	**Max**	**Factory setting**
-	-	-

Description: Displays the effective Drive Data Set (DDS).

Bit field:

Bit	Signal name	1 signal	0 signal	FP
00	DDS eff., bit 0	ON	OFF	-
01	DDS eff., bit 1	ON	OFF	-
02	DDS eff., bit 2	ON	OFF	-
03	DDS eff., bit 3	ON	OFF	-
04	DDS eff., bit 4	ON	OFF	-

Dependency: Refer to: p0820, p0821, p0822, p0823, p0824, r0837

Note: The drive data set changeover is suppressed when selecting the motor identification, during the rotating measurement, the encoder calibration and the friction characteristic record.

r0056.0...15 CO/BO: Status word, closed-loop control / ZSW cl-loop ctrl

VECTOR_G

Can be changed: -	**Calculated:** -	**Access level:** 3
Data type: Unsigned16	**Dynamic index:** -	**Func. diagram:** 1530, 2526
P-Group: Displays, signals	**Units group:** -	**Unit selection:** -
Not for motor type: -	**Scaling:** -	**Expert list:** 1
Min	**Max**	**Factory setting**
-	-	-

Description: Displays the status word of the closed-loop control.

Bit field:

Bit	Signal name	1 signal	0 signal	FP
00	Initialization completed	Yes	No	-
01	De-magnetizing completed	Yes	No	-
02	Pulse enable present	Yes	No	-
03	Soft starting present	Yes	No	-
04	Magnetizing completed	Yes	No	-
05	Voltage boost when starting	Active	Inactive	6300
06	Acceleration voltage	Active	Inactive	6300

© Siemens AG 2012 All Rights Reserved

07	Frequency negative	Yes	No	6719
08	Field weakening active	Yes	No	-
09	Voltage limit active	Yes	No	6714
10	Slip limit active	Yes	No	6310
11	Frequency limit active	Yes	No	6719
12	Current limiting controller voltage output active	Yes	No	-
13	Current/torque limiting	Active	Inactive	6060
14	Vdc_max controller active	Yes	No	6220, 6320
15	Vdc_min controller active	Yes	No	6220, 6320

r0060 CO: Speed setpoint before the setpoint filter / n_set before filt.

VECTOR_G

Can be changed: - **Calculated:** - **Access level:** 3
Data type: FloatingPoint32 **Dynamic index:** - **Func. diagram:** 2701, 2704, 5020, 6030, 6799
P-Group: Displays, signals **Units group:** 3_1 **Unit selection:** p0505
Not for motor type: - **Scaling:** p2000 **Expert list:** 1

Min	Max	Factory setting
- [rpm]	- [rpm]	- [rpm]

Description: Displays the actual speed setpoint at the input of the speed controller or U/f characteristic (after the interpolator).
Dependency: Refer to: r0020
Note: The speed setpoint is available smoothed (r0020) and unsmoothed (r0060).

r0061 CO: Actual speed unsmoothed / n_act unsmoothed

ENC

Can be changed: - **Calculated:** - **Access level:** 2
Data type: FloatingPoint32 **Dynamic index:** - **Func. diagram:** 1580, 4710, 4715
P-Group: Displays, signals **Units group:** 3_1 **Unit selection:** p0505
Not for motor type: - **Scaling:** p2000 **Expert list:** 1

Min	Max	Factory setting
- [rpm]	- [rpm]	- [rpm]

Description: Displays the unsmoothed actual speed values sensed by the encoders.
Note: The speed actual value within a PROFIBUS cycle (r2064[1]) is averaged and displayed.

r0061 CO: Actual velocity unsmoothed / v_act unsmoothed

ENC (Lin_enc)

Can be changed: - **Calculated:** - **Access level:** 2
Data type: FloatingPoint32 **Dynamic index:** - **Func. diagram:** 1580, 4710, 4715
P-Group: Displays, signals **Units group:** 4_1 **Unit selection:** p0505
Not for motor type: - **Scaling:** p2000 **Expert list:** 1

Min	Max	Factory setting
- [m/min]	- [m/min]	- [m/min]

Description: Displays the unsmoothed actual velocity values sensed by the encoders.
Note: The velocity actual value within a PROFIBUS cycle (r2064[1]) is averaged and displayed.

© Siemens AG 2012 All Rights Reserved

r0061[0...2] CO: Actual speed unsmoothed / n_act unsmoothed

VECTOR_G	**Can be changed:** -	**Calculated:** -	**Access level:** 2
	Data type: FloatingPoint32	**Dynamic index:** -	**Func. diagram:** 1580, 4710, 4715
	P-Group: Displays, signals	**Units group:** 3_1	**Unit selection:** p0505
	Not for motor type: -	**Scaling:** p2000	**Expert list:** 1
	Min - [rpm]	**Max** - [rpm]	**Factory setting** - [rpm]

Description: Displays the actual speed values sensed by the encoders.

Index:
[0] = Encoder 1
[1] = Encoder 2
[2] = Encoder 3

Note: With a parameterized filter time constant p1441, the speed signal from encoder 1 is displayed corrected by the following error.

The speeds from encoder 2 and 3 are only displayed in U/f operating modes if the function module (speed/torque control) (r0108.2) has been activated.

r0062 CO: Speed setpoint after the filter / n_set after filter

VECTOR_G	**Can be changed:** -	**Calculated:** -	**Access level:** 3
	Data type: FloatingPoint32	**Dynamic index:** -	**Func. diagram:** 1590, 1750, 5020, 5030, 5210, 6030
	P-Group: Displays, signals	**Units group:** 3_1	**Unit selection:** p0505
	Not for motor type: -	**Scaling:** p2000	**Expert list:** 1
	Min - [rpm]	**Max** - [rpm]	**Factory setting** - [rpm]

Description: Displays the actual speed setpoint after the setpoint filters.

r0063[0...2] CO: Speed actual value / n_act

VECTOR_G	**Can be changed:** -	**Calculated:** -	**Access level:** 3
	Data type: FloatingPoint32	**Dynamic index:** -	**Func. diagram:** 1680, 4715
	P-Group: Displays, signals	**Units group:** 3_1	**Unit selection:** p0505
	Not for motor type: -	**Scaling:** p2000	**Expert list:** 1
	Min - [rpm]	**Max** - [rpm]	**Factory setting** - [rpm]

Description: Displays the actual speed of the closed-loop speed control and the U/f control.

For U/f control and when slip compensation is deactivated (see p1335), the synchronous speed to the output frequency is shown in r0063[0].

Index:
[0] = Unsmoothed
[1] = Smoothed with p0045
[2] = Calculated from f_set - f_slip

Dependency: Refer to: r0021, r0022

Note: The speed actual value is calculated in encoderless operation and for U/f control.

For operation with encoder, r0063[0] is smoothed with p1441.

The speed actual value (r0063[0]) is additionally displayed - smoothed with p0045 - in r0063[1].

The speed (r0063[2]) calculated from the output frequency and slip can only be compared with the speed actual value (r0063[0]) in the steady-state.

The actual speed (r0063[0]) is available as a display quantity with additional smoothing in r0021.

© Siemens AG 2012 All Rights Reserved

r0064 CO: Speed controller system deviation / n_ctrl system dev

VECTOR_G

Can be changed: -	**Calculated:** -	**Access level:** 3
Data type: FloatingPoint32	**Dynamic index:** -	**Func. diagram:** 5040, 6040
P-Group: Displays, signals	**Units group:** 3_1	**Unit selection:** p0505
Not for motor type: -	**Scaling:** p2000	**Expert list:** 1
Min - [rpm]	**Max** - [rpm]	**Factory setting** - [rpm]

Description: Displays the actual system deviation of the speed controller.

Note: In servo control mode with active reference model, the system deviation to the P component of the speed controller is displayed.

r0065 Slip frequency / f_Slip

VECTOR_G

Can be changed: -	**Calculated:** -	**Access level:** 3
Data type: FloatingPoint32	**Dynamic index:** -	**Func. diagram:** 1710, 6310, 6727, 6730, 6732
P-Group: Displays, signals	**Units group:** 2_1	**Unit selection:** p0505
Not for motor type: -	**Scaling:** p2000	**Expert list:** 1
Min - [Hz]	**Max** - [Hz]	**Factory setting** - [Hz]

Description: Displays the slip frequency for induction motors (ASM).

r0066 CO: Output frequency / f_outp

VECTOR_G

Can be changed: -	**Calculated:** -	**Access level:** 3
Data type: FloatingPoint32	**Dynamic index:** -	**Func. diagram:** 1690, 5300, 5730, 6310, 6730, 6731, 6799
P-Group: Displays, signals	**Units group:** 2_1	**Unit selection:** p0505
Not for motor type: -	**Scaling:** p2000	**Expert list:** 1
Min - [Hz]	**Max** - [Hz]	**Factory setting** - [Hz]

Description: Displays the Motor Module output frequency.

Dependency: Refer to: r0024

Note: The output frequency is available smoothed (r0024) and unsmoothed (r0066).

r0067 CO: Output current, maximum / I_outp max

VECTOR_G

Can be changed: -	**Calculated:** -	**Access level:** 3
Data type: FloatingPoint32	**Dynamic index:** -	**Func. diagram:** 5722, 6300, 6640, 6724
P-Group: Displays, signals	**Units group:** 6_2	**Unit selection:** p0505
Not for motor type: -	**Scaling:** p2002	**Expert list:** 1
Min - [Arms]	**Max** - [Arms]	**Factory setting** - [Arms]

Description: Displays the maximum output current of the Motor Module.

Dependency: The maximum output current is determined by the parameterized current limit and the motor and converter thermal protection.
Refer to: p0290, p0640

© Siemens AG 2012 All Rights Reserved

r0068 CO: DC current in the DC link / Idc DC link

B_INF	**Can be changed:** -	**Calculated:** -	**Access level:** 3
	Data type: FloatingPoint32	**Dynamic index:** -	**Func. diagram:** 8014, 8750
	P-Group: Displays, signals	**Units group:** 6_4	**Unit selection:** p0505
	Not for motor type: -	**Scaling:** p2002	**Expert list:** 1
	Min - [A]	**Max** - [A]	**Factory setting** - [A]

Description: Displays the DC current in the DC link.

Dependency: Refer to: r0027

Notice: For Basic Line Modules of chassis format, the displayed value is invalid as these units do not have any current sensing.

Note: The DC current in the DC link is available smoothed (r0027) and unsmoothed (r0068).

r0068[0...1] CO: Absolute current actual value / I_act abs val

VECTOR_G	**Can be changed:** -	**Calculated:** -	**Access level:** 3
	Data type: FloatingPoint32	**Dynamic index:** -	**Func. diagram:** 1690, 6714, 6799, 7017, 8014, 8017, 8018
	P-Group: Displays, signals	**Units group:** 6_2	**Unit selection:** p0505
	Not for motor type: -	**Scaling:** p2002	**Expert list:** 1
	Min - [Arms]	**Max** - [Arms]	**Factory setting** - [Arms]

Description: Displays actual absolute current.

Index: [0] = Unsmoothed
[1] = Smoothed with p0045

Dependency: Refer to: r0027

Notice: The value is updated with the current controller sampling time.

Note: Absolute current value = sqrt(Iq^2 + Id^2)

The absolute value of the current actual value is available smoothed (r0027 with 300 ms, r0068[1] with p0045) and unsmoothed (r0068[0]).

r0069[0...6] CO: Phase current actual value / I_phase act value

VECTOR_G	**Can be changed:** -	**Calculated:** -	**Access level:** 3
	Data type: FloatingPoint32	**Dynamic index:** -	**Func. diagram:** 1630, 5730, 6714, 6730, 6731, 8850, 8950
	P-Group: Displays, signals	**Units group:** 6_5	**Unit selection:** p0505
	Not for motor type: -	**Scaling:** p2002	**Expert list:** 1
	Min - [A]	**Max** - [A]	**Factory setting** - [A]

Description: Displays the measured actual phase currents as peak value.

Index: [0] = Phase U
[1] = Phase V
[2] = Phase W
[3] = Phase U offset
[4] = Phase V offset
[5] = Phase W offset
[6] = Total U, V, W

Note: In indices 3 ... 5, the offset currents of the 3 phases, which are added to correct the phase currents, are displayed.

The sum of the 3 corrected phase currents is displayed in index 6.

© Siemens AG 2012 All Rights Reserved

r0070 CO: Actual DC link voltage / Vdc act val

B_INF	**Can be changed:** -	**Calculated:** -	**Access level:** 3
	Data type: FloatingPoint32	**Dynamic index:** -	**Func. diagram:** 1774, 8750, 8850, 8864, 8940, 8950, 8964
	P-Group: Displays, signals	**Units group:** 5_2	**Unit selection:** p0505
	Not for motor type: -	**Scaling:** p2001	**Expert list:** 1
	Min - [V]	**Max** - [V]	**Factory setting** - [V]

Description: Displays the measured actual value of the DC link voltage.

Dependency: Refer to: r0026

Note: The DC link voltage is available smoothed (r0026) and unsmoothed (r0070).

r0070 CO: Actual DC link voltage / Vdc act val

VECTOR_G	**Can be changed:** -	**Calculated:** -	**Access level:** 3
	Data type: FloatingPoint32	**Dynamic index:** -	**Func. diagram:** 6723, 6724, 6730, 6731, 6799
	P-Group: Displays, signals	**Units group:** 5_2	**Unit selection:** p0505
	Not for motor type: -	**Scaling:** p2001	**Expert list:** 1
	Min - [V]	**Max** - [V]	**Factory setting** - [V]

Description: Displays the measured actual value of the DC link voltage.

Dependency: Refer to: r0026

Notice: For SINAMICS S120 AC Drive (AC/AC) the following applies:

When measuring a DC link voltage < 200 V, for the Power Module (e.g. PM340) a valid measured value is not supplied. In this case, when an external 24V power supply is connected, a value of approx. 24 V is displayed.

Note: The DC link voltage is available smoothed (r0026) and unsmoothed (r0070).

r0071 Maximum output voltage / U_output max

VECTOR_G	**Can be changed:** -	**Calculated:** -	**Access level:** 3
	Data type: FloatingPoint32	**Dynamic index:** -	**Func. diagram:** 1710, 6300, 6640, 6722, 6723, 6724, 6725, 6727
	P-Group: Displays, signals	**Units group:** 5_1	**Unit selection:** p0505
	Not for motor type: -	**Scaling:** p2001	**Expert list:** 1
	Min - [Vrms]	**Max** - [Vrms]	**Factory setting** - [Vrms]

Description: Displays the maximum output voltage.

Dependency: The maximum output voltage depends on the actual DC link voltage (r0070) and the maximum modulation depth (p1803).

Note: As the (driven) motor load increases, the maximum output voltage drops as a result of the reduction in DC link voltage.

r0072 CO: Output voltage / U_output

VECTOR_G	**Can be changed:** -	**Calculated:** -	**Access level:** 3
	Data type: FloatingPoint32	**Dynamic index:** -	**Func. diagram:** 1630, 5730, 6730, 6731, 6799
	P-Group: Displays, signals	**Units group:** 5_1	**Unit selection:** p0505
	Not for motor type: -	**Scaling:** p2001	**Expert list:** 1
	Min - [Vrms]	**Max** - [Vrms]	**Factory setting** - [Vrms]

Description: Displays the actual power unit output voltage (Motor Module).

Dependency: Refer to: r0025

Note: The output voltage is available smoothed (r0025) and unsmoothed (r0072).

© Siemens AG 2012 All Rights Reserved

r0073 Maximum modulation depth / Modulat_depth max

VECTOR_G	**Can be changed:** -	**Calculated:** -	**Access level:** 3
	Data type: FloatingPoint32	**Dynamic index:** -	**Func. diagram:** 6723, 6724, 6725
	P-Group: Modulation	**Units group:** -	**Unit selection:** -
	Not for motor type: -	**Scaling:** PERCENT	**Expert list:** 1
	Min - [%]	**Max** - [%]	**Factory setting** - [%]

Description: Displays the maximum modulation depth.

Dependency: Refer to: p1803

r0074 CO: Modulat_depth / Modulat_depth

VECTOR_G	**Can be changed:** -	**Calculated:** -	**Access level:** 3
	Data type: FloatingPoint32	**Dynamic index:** -	**Func. diagram:** 5730, 6730, 6731, 6799, 8940, 8950
	P-Group: Displays, signals	**Units group:** -	**Unit selection:** -
	Not for motor type: -	**Scaling:** PERCENT	**Expert list:** 1
	Min - [%]	**Max** - [%]	**Factory setting** - [%]

Description: Displays the actual modulation depth.

Dependency: Refer to: r0028

Note: For space vector modulation, 100% corresponds to the maximum output voltage without overcontrol.
Values above 100 % indicate an overcontrol condition - values below 100% have no overcontrol.
The phase voltage (phase-to-phase, rms) is calculated as follows:(r0074 x r0070) / (sqrt(2) x 100 %).
The modulation depth is available smoothed (r0028) and unsmoothed (r0074).

r0075 CO: Current setpoint field-generating / Id_set

VECTOR_G	**Can be changed:** -	**Calculated:** -	**Access level:** 3
	Data type: FloatingPoint32	**Dynamic index:** -	**Func. diagram:** 1630, 5714, 5722, 6714
	P-Group: Displays, signals	**Units group:** 6_2	**Unit selection:** p0505
	Not for motor type: -	**Scaling:** p2002	**Expert list:** 1
	Min - [Arms]	**Max** - [Arms]	**Factory setting** - [Arms]

Description: Displays the field-generating current setpoint (Id_set).

Note: This value is irrelevant for the U/f control mode.

r0076 CO: Current actual value field-generating / Id_act

VECTOR_G	**Can be changed:** -	**Calculated:** -	**Access level:** 3
	Data type: FloatingPoint32	**Dynamic index:** -	**Func. diagram:** 1630, 1710, 5714, 5730, 6714, 6799
	P-Group: Displays, signals	**Units group:** 6_2	**Unit selection:** p0505
	Not for motor type: -	**Scaling:** p2002	**Expert list:** 1
	Min - [Arms]	**Max** - [Arms]	**Factory setting** - [Arms]

Description: Displays the field-generating current actual value (Id_act).

Dependency: Refer to: r0029

Note: This value is irrelevant for the U/f control mode.
The field-generating current actual value is available smoothed (r0029) and unsmoothed (r0076).

© Siemens AG 2012 All Rights Reserved

r0077 CO: Current setpoint torque-generating / Iq_set

VECTOR_G	**Can be changed:** -	**Calculated:** -	**Access level:** 3
	Data type: FloatingPoint32	**Dynamic index:** -	**Func. diagram:** 1630, 1774, 5714, 6710, 6714, 6719
	P-Group: Displays, signals	**Units group:** 6_2	**Unit selection:** p0505
	Not for motor type: -	**Scaling:** p2002	**Expert list:** 1
	Min - [Arms]	**Max** - [Arms]	**Factory setting** - [Arms]

Description: Displays the torque/force generating current setpoint.

Note: This value is irrelevant for the U/f control mode.

r0078 CO: Current actual value torque-generating / Iq_act

VECTOR_G	**Can be changed:** -	**Calculated:** -	**Access level:** 3
	Data type: FloatingPoint32	**Dynamic index:** -	**Func. diagram:** 1710, 6310, 6714, 6799
	P-Group: Displays, signals	**Units group:** 6_2	**Unit selection:** p0505
	Not for motor type: -	**Scaling:** p2002	**Expert list:** 1
	Min - [Arms]	**Max** - [Arms]	**Factory setting** - [Arms]

Description: Displays the torque-generating current actual value (Iq_act).

Dependency: Refer to: r0030

Note: This value is irrelevant for the U/f control mode.
The torque-generating current actual value is available smoothed (r0030 with 300 ms) and unsmoothed (r0078).

r0079 CO: Torque setpoint / M_set total

VECTOR_G	**Can be changed:** -	**Calculated:** -	**Access level:** 3
	Data type: FloatingPoint32	**Dynamic index:** -	**Func. diagram:** 1700, 1710, 6030, 6060, 6710, 8012
	P-Group: Displays, signals	**Units group:** 7_1	**Unit selection:** p0505
	Not for motor type: -	**Scaling:** p2003	**Expert list:** 1
	Min - [Nm]	**Max** - [Nm]	**Factory setting** - [Nm]

Description: Displays the torque setpoint at the output of the speed controller.

r0080[0...1] CO: Torque actual value / M_act

VECTOR_G	**Can be changed:** -	**Calculated:** -	**Access level:** 3
	Data type: FloatingPoint32	**Dynamic index:** -	**Func. diagram:** 6714, 6799
	P-Group: Displays, signals	**Units group:** 7_1	**Unit selection:** p0505
	Not for motor type: -	**Scaling:** p2003	**Expert list:** 1
	Min - [Nm]	**Max** - [Nm]	**Factory setting** - [Nm]

Description: Displays the actual torque value.

Index: [0] = Unsmoothed
[1] = Smoothed with p0045

Dependency: Refer to: r0031

Note: The torque actual value is available smoothed (r0031 with 100 ms, r0080[1] with p0045) and unsmoothed (r0080[0]).

© Siemens AG 2012 All Rights Reserved

r0081 CO: Torque utilization / M_Utilization

VECTOR_G

Can be changed: -	**Calculated:** -	**Access level:** 3
Data type: FloatingPoint32	**Dynamic index:** -	**Func. diagram:** 8012
P-Group: Displays, signals	**Units group:** -	**Unit selection:** -
Not for motor type: -	**Scaling:** PERCENT	**Expert list:** 1
Min - [%]	**Max** - [%]	**Factory setting** - [%]

Description: Displays the torque utilization as a percentage.
The torque utilization is obtained from the required smoothed torque referred to the torque limit.

Dependency: Refer to: r0033

Note: The torque utilization is available smoothed (r0033) and unsmoothed (r0081).
The torque utilization is obtained from the required torque referred to the torque limit as follows:
- Positive torque: r0081 = (r0079 / r1538) * 100 %
- Negative torque: r0081 = (-r0079 / -r1539) * 100 %

r0082 CO: Active power actual value / P_act

B_INF

Can be changed: -	**Calculated:** -	**Access level:** 3
Data type: FloatingPoint32	**Dynamic index:** -	**Func. diagram:** 8750, 8850, 8950
P-Group: Displays, signals	**Units group:** 14_7	**Unit selection:** p0505
Not for motor type: -	**Scaling:** r2004	**Expert list:** 1
Min - [kW]	**Max** - [kW]	**Factory setting** - [kW]

Description: Displays the instantaneous active power.

Dependency: Refer to: r0032

Notice: For Basic Line Modules of chassis format, the displayed value is invalid as these units do not have any current sensing.

Note: The active power is available smoothed (r0032) and unsmoothed (r0082).

r0082[0...2] CO: Active power actual value / P_act

VECTOR_G

Can be changed: -	**Calculated:** -	**Access level:** 3
Data type: FloatingPoint32	**Dynamic index:** -	**Func. diagram:** 6714, 6799
P-Group: Displays, signals	**Units group:** 14_5	**Unit selection:** p0505
Not for motor type: -	**Scaling:** r2004	**Expert list:** 1
Min - [kW]	**Max** - [kW]	**Factory setting** - [kW]

Description: Displays the instantaneous active power.

Index: [0] = Unsmoothed
[1] = Smoothed with p0045
[2] = Electric power

Dependency: Refer to: r0032

Note: The mechanical active power is available smoothed (r0032 with 100 ms, r0082[1] with p0045) and unsmoothed (r0082[0]).

r0083 CO: Flux setpoint / Flex setp

VECTOR_G

Can be changed: -	**Calculated:** -	**Access level:** 3
Data type: FloatingPoint32	**Dynamic index:** -	**Func. diagram:** -
P-Group: Displays, signals	**Units group:** -	**Unit selection:** -
Not for motor type: -	**Scaling:** PERCENT	**Expert list:** 1
Min - [%]	**Max** - [%]	**Factory setting** - [%]

Description: Displays the flux setpoint.

© Siemens AG 2012 All Rights Reserved

r0084[0...1] CO: Flux actual value / Flux act val

VECTOR_G	**Can be changed:** -	**Calculated:** -	**Access level:** 3
	Data type: FloatingPoint32	**Dynamic index:** -	**Func. diagram:** 6726, 6730, 6732
	P-Group: Displays, signals	**Units group:** -	**Unit selection:** -
	Not for motor type: -	**Scaling:** PERCENT	**Expert list:** 1
	Min - [%]	**Max** - [%]	**Factory setting** - [%]

Description: Displays the flux actual value.

Index: [0] = Unsmoothed
[1] = Smoothed

Note: The flux actual value (index 1) smoothed with p1585 is only displayed for separately-excited synchronous motors.
In the following cases, the unsmoothed flux actual value is also displayed:
- in the range of the current model.
- during the pole position identification.
- for I/f control.
- for a stalled drive.

r0087 CO: Actual power factor / Cos phi act

VECTOR_G	**Can be changed:** -	**Calculated:** -	**Access level:** 3
	Data type: FloatingPoint32	**Dynamic index:** -	**Func. diagram:** 6714, 6730, 6732, 6799
	P-Group: Displays, signals	**Units group:** -	**Unit selection:** -
	Not for motor type: -	**Scaling:** -	**Expert list:** 1
	Min -	**Max** -	**Factory setting** -

Description: Displays the actual active power factor.

r0088 CO: DC link voltage setpoint / Vdc setpoint

VECTOR_G (Tech_ctrl)	**Can be changed:** -	**Calculated:** -	**Access level:** 3
	Data type: FloatingPoint32	**Dynamic index:** -	**Func. diagram:** -
	P-Group: Displays, signals	**Units group:** 5_2	**Unit selection:** p0505
	Not for motor type: -	**Scaling:** p2001	**Expert list:** 1
	Min - [V]	**Max** - [V]	**Factory setting** - [V]

Description: Displays the setpoint for the DC link voltage.

r0089[0...2] Actual phase voltage / U_phase act val

VECTOR_G	**Can be changed:** -	**Calculated:** -	**Access level:** 3
	Data type: FloatingPoint32	**Dynamic index:** -	**Func. diagram:** 6719
	P-Group: Displays, signals	**Units group:** 5_3	**Unit selection:** p0505
	Not for motor type: -	**Scaling:** p2001	**Expert list:** 1
	Min - [V]	**Max** - [V]	**Factory setting** - [V]

Description: Displays the actual phase voltage.

Index: [0] = Phase U
[1] = Phase V
[2] = Phase W

Note: The values are determined from the transistor power-on duration.

© Siemens AG 2012 All Rights Reserved

p0092 Clock synchronous operation pre-assignment/check / Clock sync op

CU_G130_DP, CU_G130_PN, CU_G150_DP, CU_G150_PN

Can be changed: C1(1)	**Calculated:** -	**Access level:** 1
Data type: Integer16	**Dynamic index:** -	**Func. diagram:** -
P-Group: -	**Units group:** -	**Unit selection:** -
Not for motor type: -	**Scaling:** -	**Expert list:** 1
Min	**Max**	**Factory setting**
0	1	0

Description:

Setting to pre-assign/check the sampling times for the internal controller clock cycles for clock-synchronous PROFIdrive operation.

Re p0092 = 1:

The controller clock cycles are set so that clock synchronous PROFIdrive operation is possible. If it is not possible to change the controller clock cycles of the clock-cycle synchronous PROFIdrive operation, then an appropriate message is output.

The pre-setting of the controller clock cycles can result in a derating of the Motor Module (e.g. p0115[0] = 400 µs --> 375 µs).

When calculating the drive unit utilization (r9976), when using the fixed DCC runtime groups "Receive AFTER IF1 PROFIdrive PZD", "Send BEFORE IF1 PROFIdrive PZD", "Receive AFTER IF2 PZD" (from V4.4) and "Send BEFORE IF2 PZD" (from V4.4), then its maximum computing time load has already been calculated during ramp-up for isochronous operation and taken into account in r9976 (from V4.3).

Re p0092 = 0:

The controller clock cycles are set without any restrictions by the clock-cycle PROFIdrive operation (same as for up to V2.3).

When calculating the drive unit utilization (r9976), when using the fixed DCC runtime groups "Receive AFTER IF1 PROFIdrive PZD", "Send BEFORE IF1 PROFIdrive PZD", "Receive AFTER IF2 PZD" (from V4.4) and "Send BEFORE IF2 PZD" (from V4.4), then its maximum computing time load has already been calculated during ramp-up for isochronous operation and taken into account in r9976 (from V4.3).

Value:

0: No isochronous PROFIBUS
1: Isochronous PROFIBUS

Dependency:

Refer to: r0110, p0115

Refer to: A01223, A01224

Caution:

Only current controller clock cycles (p0115[0]) which are integers of 125 µs are permitted for isochronous mode.

In addition, current controller clock cycles 31.25 µs and 62.5 µs are possible.

Notice:

p0092 only affects the automatic default for the clock cycles (p0115) in the drive. If the clock cycles are modified subsequently in expert mode (p0112 = 0), p0092 = 0 should be set so that the new values are not overwritten again by the automatic default when the parameters are downloaded.

The conditions for current controller clock cycle for isosynchronous operation must still be carefully ensured (refer under Caution!).

r0094 CO: Transformation angle / Transformat_angle

VECTOR_G

Can be changed: -	**Calculated:** -	**Access level:** 3
Data type: FloatingPoint32	**Dynamic index:** -	**Func. diagram:** 1580, 1680, 1690, 4710, 6714, 6730, 6731, 6732
P-Group: Displays, signals	**Units group:** -	**Unit selection:** -
Not for motor type: -	**Scaling:** p2005	**Expert list:** 1
Min	**Max**	**Factory setting**
- [°]	- [°]	- [°]

Description:

Displays the transformation angle.

Dependency:

Refer to: p0431, r1778

Note:

The transformation angle corresponds to the electrical commutation angle.

If no pole position identification is carried out (p1982), and the encoder is adjusted, the following applies:

The encoder supplies the value and indicates the electrical angle of the flux position (d axis).

© Siemens AG 2012 All Rights Reserved

p0097 Select drive object type / Select DO type

CU_G130_DP, CU_G130_PN, CU_G150_DP, CU_G150_PN	**Can be changed:** C1(1)	**Calculated:** -	**Access level:** 1
	Data type: Integer16	**Dynamic index:** -	**Func. diagram:** -
	P-Group: Topology	**Units group:** -	**Unit selection:** -
	Not for motor type: -	**Scaling:** -	**Expert list:** 1
	Min	**Max**	**Factory setting**
	0	24	0

Description: Executes an automatic device configuration.
In so doing, p0099, p0107 and p0108 are appropriately set.

Value:
0: No selection
1: Drive object type SERVO
2: Drive object type VECTOR
3: SINAMICS GM (DFEMV & VECTORMV)
4: SINAMICS SM (AFEMV & VECTORMV)
5: SINAMICS GL (VECTORGL)
6: SINAMICS SL (VECTORSL)
12: Drive object type VECTOR parallel circuit
13: Drive object type VECTORMV - GM parallel circuit
14: Drive object type VECTORMV - SM parallel circuit
15: Drive object type DC_CTRL
16: Drive object type SERVO HMI
17: Drive object type VECTOR HMI
24: Drive object type VECTORMV - SM parallel circuit

Dependency: Refer to: r0098, p0099
Refer to: A01330

Note: For p0097 = 0, p0099 is automatically set to the factory setting.
The possible settings are dependent upon the device type.

r0098[0...5] Actual device topology / Device_act topo

CU_G130_DP, CU_G130_PN, CU_G150_DP, CU_G150_PN	**Can be changed:** -	**Calculated:** -	**Access level:** 1
	Data type: Unsigned32	**Dynamic index:** -	**Func. diagram:** -
	P-Group: Topology	**Units group:** -	**Unit selection:** -
	Not for motor type: -	**Scaling:** -	**Expert list:** 1
	Min	**Max**	**Factory setting**
	-	-	-

Description: Displays the automatically detected actual device topology in coded form.

Index:
[0] = DRIVE-CLiQ socket X100
[1] = DRIVE-CLiQ socket X101
[2] = DRIVE-CLiQ socket X102
[3] = DRIVE-CLiQ socket X103
[4] = DRIVE-CLiQ socket X104
[5] = DRIVE-CLiQ socket X105

Dependency: Refer to: p0097, p0099

Note: Topology coding: abcd efgh hex
a = number of Active Line Modules
b = number of Motor Modules
c = number of motors
d = number of encoders (or the line supply voltage sensing for Active Line Modules)
e = number of additional encoders (or the line supply voltage sensing for Active Line Modules)
f = number of Terminal Modules
g = number of Terminal Boards
h = reserved
if the value 0 is displayed in all indices, then components are not detected via DRIVE-CLiQ.
If a value F hex occurs at a position of the coding (abcd efgh hex), then an overflow has occurred.

© Siemens AG 2012 All Rights Reserved

p0099[0...5] Device target topology / Device_target topo

CU_G130_DP, CU_G130_PN, CU_G150_DP, CU_G150_PN

Can be changed: C1(1)	**Calculated:** -	**Access level:** 1
Data type: Unsigned32	**Dynamic index:** -	**Func. diagram:** -
P-Group: Topology	**Units group:** -	**Unit selection:** -
Not for motor type: -	**Scaling:** -	**Expert list:** 1
Min	**Max**	**Factory setting**
0000 hex	FFFF FFFF hex	0000 hex

Description: Sets the device target topology in coded form (refer to r0098). The setting is made during commissioning.

De-activated or non-available components are also counted

Index:
[0] = DRIVE-CLiQ socket X100
[1] = DRIVE-CLiQ socket X101
[2] = DRIVE-CLiQ socket X102
[3] = DRIVE-CLiQ socket X103
[4] = DRIVE-CLiQ socket X104
[5] = DRIVE-CLiQ socket X105

Dependency: The parameter can only be written into for p0097 = 0.

To perform an automatic device configuration run, an index of the device target topology must be set to the value of the device actual topology in r0098 for acknowledgement. An index of the device actual topology with a value other than 0 must be selected.

Refer to: p0097, r0098

Refer to: A01330

Note: The parameter can only be set to the values 0, the value of the actual device topology, the value of the actual device target topology and FFFFFFFF hex.

If the value 0 is displayed in all of the indices, then the system has still not been commissioned.

The value FFFFFFFF hex indicates that the topology was not generated by the automatic device configuration but was commissioned using the commissioning software (e.g. using parameter download).

p0100 IEC/NEMA mot stds / IEC/NEMA mot stds

VECTOR_G

Can be changed: C2(1)	**Calculated:** -	**Access level:** 1
Data type: Integer16	**Dynamic index:** -	**Func. diagram:** -
P-Group: Converter	**Units group:** -	**Unit selection:** -
Not for motor type: FEM	**Scaling:** -	**Expert list:** 1
Min	**Max**	**Factory setting**
0	1	0

Description: Defines whether the motor and drive converter power settings (e.g. rated motor power, p0307) are expressed in [kW] or [hp].

Depending on the selection, the rated motor frequency (p0310) is either set to 50 Hz or 60 Hz.

For p0100 = 0, the following applies: The power factor (p0308) should be parameterized.

For p0100 = 1, the following applies: The efficiency (p0309) should be parameterized.

Value:
0: IEC-Motor (50 Hz, SI units)
1: NEMA motor (60 Hz, US units)

Dependency: If p0100 is changed, all of the rated motor parameters are reset. Only then are possible unit changeovers made.

The units of all motor parameters are changed that are involved in the selection of IEC or NEMA (e.g. r0206, p0307, p0316, r0333, r0334, p0341, p0344, r1493, r1969).

Refer to: r0206, p0210, p0300, p0304, p0305, p0307, p0308, p0309, p0310, p0311, p0314, p0320, p0322, p0323, p0335, r0336, r0337, p1800

Note: The parameter can only be changed for vector control (p0107).

The parameter value is not reset when the factory setting is restored (p0010 = 30, p0970).

© Siemens AG 2012 All Rights Reserved

p0101[0...23] Drive object numbers / DO numbers

CU_G130_DP, CU_G130_PN, CU_G150_DP, CU_G150_PN	**Can be changed:** C1(1)	**Calculated:** -	**Access level:** 2
	Data type: Unsigned16	**Dynamic index:** -	**Func. diagram:** -
	P-Group: Topology	**Units group:** -	**Unit selection:** -
	Not for motor type: -	**Scaling:** -	**Expert list:** 1
	Min	**Max**	**Factory setting**
	0	62	0

Description: The parameter contains the object number via which every drive object can be addressed.

The number of an existing drive object is entered into each index.

Value = 0: No drive object is defined.

Index:
[0] = Drive object number Control Unit
[1] = Drive object number object 1
[2] = Drive object number object 2
[3] = Drive object number object 3
[4] = Drive object number object 4
[5] = Drive object number object 5
[6] = Drive object number object 6
[7] = Drive object number object 7
[8] = Drive object number object 8
[9] = Drive object number object 9
[10] = Drive object number object 10
[11] = Drive object number object 11
[12] = Drive object number object 12
[13] = Drive object number object 13
[14] = Drive object number object 14
[15] = Drive object number object 15
[16] = Drive object number object 16
[17] = Drive object number object 17
[18] = Drive object number object 18
[19] = Drive object number object 19
[20] = Drive object number object 20
[21] = Drive object number object 21
[22] = Drive object number object 22
[23] = Drive object number object 23

Note: The numbers are automatically assigned once and can no longer be changed as long as the object has not been deleted.

In the commissioning software, this object number cannot be entered using the expert list, but is automatically assigned when inserting an object.

r0102[0...1] Number of drive objects / DO count

CU_G130_DP, CU_G130_PN, CU_G150_DP, CU_G150_PN	**Can be changed:** -	**Calculated:** -	**Access level:** 2
	Data type: Unsigned16	**Dynamic index:** -	**Func. diagram:** -
	P-Group: Topology	**Units group:** -	**Unit selection:** -
	Not for motor type: -	**Scaling:** -	**Expert list:** 1
	Min	**Max**	**Factory setting**
	-	-	-

Description: Displays the number of existing or existing and prepared drive objects.

Index:
[0] = Existing drive objects
[1] = Existing and prepared drive objects

Dependency: Refer to: p0101

Note: The numbers of the drive objects are in p0101.

Index 0:

Displays the number of drive objects that have already been set up.

Index 1:

Displays the number of drive objects that have already been set up and, in addition, the drive objects that still have to be set up.

© Siemens AG 2012 All Rights Reserved

r0103 Application-specific view / Appl_spec view

B_INF, VECTOR_G

Can be changed: -	**Calculated:** -	**Access level:** 2
Data type: Unsigned16	**Dynamic index:** -	**Func. diagram:** -
P-Group: Closed-loop control	**Units group:** -	**Unit selection:** -
Not for motor type: -	**Scaling:** -	**Expert list:** 1
Min	**Max**	**Factory setting**
0	65535	-

Description: Displays the application-specific view of the individual drive object.

Dependency: Refer to: p0107, r0107

p0103[0...23] Application-specific view / Appl_spec view

CU_G130_DP, CU_G130_PN, CU_G150_DP, CU_G150_PN

Can be changed: C1(2)	**Calculated:** -	**Access level:** 2
Data type: Unsigned16	**Dynamic index:** -	**Func. diagram:** -
P-Group: -	**Units group:** -	**Unit selection:** -
Not for motor type: -	**Scaling:** -	**Expert list:** 1
Min	**Max**	**Factory setting**
0	999	0

Description: The application-specific view of an existing drive object is entered into each index.
The parameter cannot be changed.

Dependency: Refer to: p0107, r0107

Note: In the non-volatile memory, the application-specific views are defined in files with the following structure:
PDxxxyyy.ACX
xxx: Application-specific view (p0103)
yyy: Type of drive object (p0107)
Example:
PD052011.ACX
--> "011" stands for the drive object, type SERVO
--> "052" is the number of the view for this drive object

p0105 Activate/de-activate drive object / DO act/deact

B_INF, ENC, HUB, TB30, TM150, VECTOR_G

Can be changed: T	**Calculated:** -	**Access level:** 2
Data type: Integer16	**Dynamic index:** -	**Func. diagram:** -
P-Group: Closed-loop control	**Units group:** -	**Unit selection:** -
Not for motor type: -	**Scaling:** -	**Expert list:** 1
Min	**Max**	**Factory setting**
0	2	1

Description: Setting to activate/de-activate a drive object.

Value:
0: De-activate drive object
1: Activate drive object
2: Drive object, de-activate and not present

Recommend.: After inserting all of the components of a drive object, before activating, first wait for Alarm A01316.

Dependency: Refer to: r0106
Refer to: A01314, A01316

Caution: When activating drive objects with the safety functions enabled, the following applies:
After reactivating, a warm restart (p0009 = 30, p0976 = 2, 3) or POWER ON should be carried out.

Notice: The following applies when activating:
If components are inserted for the first time and the appropriate drive object is activated, then the drive system is automatically booted. To do this, the pulses of all of the drive objects must be suppressed.

Note: Re value = 0, 2:
When a drive object is deactivated it no longer outputs any errors.

© Siemens AG 2012 All Rights Reserved

If value = 0:

All components of the drive object were completely commissioned and are deactivated using this value. They can be removed from the DRIVE-CLiQ without any error.

If value = 1:

All components of the drive object must be available for error-free operation.

If value = 2:

Components of a drive object in a project generated offline and set to this value must never be inserted in the actual topology from the very start. This means that the components are marked to be bypassed in the DRIVE-CLiQ line.

For components that comprise several individual components (e.g. Double Motor Modules), it is not permissible to set just one subset to this value.

p0105 Activate/de-activate drive object / DO act/deact

CU_G130_DP, CU_G130_PN, CU_G150_DP, CU_G150_PN

Can be changed: U, T	**Calculated:** -	**Access level:** 2
Data type: Integer16	**Dynamic index:** -	**Func. diagram:** -
P-Group: Closed-loop control	**Units group:** -	**Unit selection:** -
Not for motor type: -	**Scaling:** -	**Expert list:** 1
Min	**Max**	**Factory setting**
0	1	1

Description: Setting to activate/de-activate a drive object.

Value:
0: De-activate drive object
1: Activate drive object

Dependency: Refer to: r0106

Notice: The following applies when activating:

If components are inserted for the first time and the appropriate drive object is activated, then the drive system is automatically booted. To do this, the pulses of all of the drive objects must be suppressed.

p0105 Activate/de-activate drive object / DO act/deact

TM31

Can be changed: T	**Calculated:** -	**Access level:** 2
Data type: Integer16	**Dynamic index:** -	**Func. diagram:** -
P-Group: Closed-loop control	**Units group:** -	**Unit selection:** -
Not for motor type: -	**Scaling:** -	**Expert list:** 1
Min	**Max**	**Factory setting**
0	2	1

Description: Setting to activate/de-activate a drive object.

Value:
0: De-activate drive object
1: Activate drive object
2: Drive object, de-activate and not present

Recommend.: After inserting all of the components of a drive object, before activating, first wait for Alarm A01316.

Dependency: Refer to: r0106

Refer to: A01314, A01316

Warning: A drive that is moved by simulating the inputs of a Terminal Module is brought to a standstill while this parameter is being changed over.

Notice: The following applies when activating:

If components are inserted for the first time and the appropriate drive object is activated, then the drive system is automatically booted. To do this, the pulses of all of the drive objects must be suppressed.

Note: Re value = 0, 2:

When a drive object is deactivated it no longer outputs any errors.

If value = 0:

All components of the drive object were completely commissioned and are deactivated using this value. They can be removed from the DRIVE-CLiQ without any error.

If value = 1:

All components of the drive object must be available for error-free operation.

© Siemens AG 2012 All Rights Reserved

If value = 2:

Components of a drive object in a project generated offline and set to this value must never be inserted in the actual topology from the very start. This means that the components are marked to be bypassed in the DRIVE-CLiQ line.

For components that comprise several individual components (e.g. Double Motor Modules), it is not permissible to set just one subset to this value.

p0105 Activate/de-activate drive object / DO act/deact

TM54F_MA, TM54F_SL

Can be changed: T	**Calculated:** -	**Access level:** 3
Data type: Integer16	**Dynamic index:** -	**Func. diagram:** -
P-Group: Closed-loop control	**Units group:** -	**Unit selection:** -
Not for motor type: -	**Scaling:** -	**Expert list:** 1
Min	**Max**	**Factory setting**
0	2	1

Description: Setting to activate/de-activate a drive object.

Value:
0: De-activate drive object
1: Activate drive object
2: Drive object, de-activate and not present

Recommend.: After inserting all of the components of a drive object, before activating, first wait for Alarm A01316.

Dependency: Refer to: r0106

Refer to: A01314, A01316

Caution: TM54F can only be de-activated if all of the drives assigned to it via P10010 have been de-activated or safety on the assigned drives has not be enabled.

When activating drive objects with the safety functions enabled, the following applies:

After reactivating, a warm restart (p0009 = 30, p0976 = 2, 3) or POWER ON should be carried out.

Notice: The following applies when activating:

If components are inserted for the first time and the appropriate drive object is activated, then the drive system is automatically booted. To do this, the pulses of all of the drive objects must be suppressed.

Note: Re value = 0, 2:

When a drive object is deactivated it no longer outputs any errors.

If value = 0:

All components of the drive object were completely commissioned and are deactivated using this value. They can be removed from the DRIVE-CLiQ without any error.

If value = 1:

All components of the drive object must be available for error-free operation.

If value = 2:

Components of a drive object in a project generated offline and set to this value must never be inserted in the actual topology from the very start. This means that the components are marked to be bypassed in the DRIVE-CLiQ line.

For components that comprise several individual components (e.g. Double Motor Modules), it is not permissible to set just one subset to this value.

r0106 Drive object active/inactive / DO act/inact

B_INF, CU_G130_DP, CU_G130_PN, CU_G150_DP, CU_G150_PN, ENC, HUB, TB30, TM150, TM31, VECTOR_G

Can be changed: -	**Calculated:** -	**Access level:** 2
Data type: Integer16	**Dynamic index:** -	**Func. diagram:** -
P-Group: Closed-loop control	**Units group:** -	**Unit selection:** -
Not for motor type: -	**Scaling:** -	**Expert list:** 1
Min	**Max**	**Factory setting**
0	1	-

Description: Displays the "active/inactive" state of a drive object.

Value:
0: Drive object inactive
1: Drive object active

Dependency: Refer to: p0105

© Siemens AG 2012 All Rights Reserved

r0107 Drive object type / DO type

B_INF, ENC, HUB, TB30, TM150, TM31, TM54F_MA, TM54F_SL, VECTOR_G	**Can be changed:** -	**Calculated:** -	**Access level:** 2
	Data type: Integer16	**Dynamic index:** -	**Func. diagram:** -
	P-Group: Closed-loop control	**Units group:** -	**Unit selection:** -
	Not for motor type: -	**Scaling:** -	**Expert list:** 1
	Min	**Max**	**Factory setting**
	0	600	-

Description: Displays the type of each drive object.

Value:

0: -
1: SINAMICS S
2: SINAMICS G
3: SINAMICS I
4: SINAMICS NX/CX32
5: SINAMICS GM
6: SINAMICS DC
7: SINAMICS GL
9: SINAMICS S110
10: ACTIVE INFEED CONTROL
11: SERVO
12: VECTOR
13: VECTORMV
14: VECTORGL
15: VECTOR3P
16: VECTORSL
17: DC_CTRL
18: VECTORM2C
19: VECTORDM
20: SMART INFEED CONTROL
30: BASIC INFEED CONTROL
35: BRAKE MODULE M2C
40: ACTIVE INFEED CONTROLMV
41: BASIC INFEED CONTROLMV
42: ACTIVE INFEED CONTROLM2C
51: SINAMICS G120 230 (SingleDO-Drive which combines Device+Vector)
52: SINAMICSG120 240_2 (SingleDO-Drive which combines Device+Vector)
54: SINAMICSG120 G120D(SingleDO-Drive which combines Device+Vector)
70: HLA
100: TB30 (Terminal Board)
101: SINAMICS SL
102: SINAMICS MV
150: DRIVE-CLiQ Hub Module
200: TM31 (Terminal Module)
201: TM41 (Terminal Module)
202: TM17 High Feature (Terminal Module)
203: TM15 (Terminal Module)
204: TM15 (Terminal Module for SINAMICS)
205: TM54F - Master (Terminal Module)
206: TM54F - Slave (Terminal Module)
207: TM120 (Terminal Module)
208: TM150 (Terminal Module)
254: CU-LINK
300: ENCODER
600: SINAMICS V60-G2 V80-G2

Dependency: Refer to: p0103, r0103

© Siemens AG 2012 All Rights Reserved

p0107[0...23] Drive object type / DO type

CU_G130_DP, CU_G130_PN, CU_G150_DP, CU_G150_PN	**Can be changed:** C1(2)	**Calculated:** -	**Access level:** 2
	Data type: Integer16	**Dynamic index:** -	**Func. diagram:** -
	P-Group: -	**Units group:** -	**Unit selection:** -
	Not for motor type: -	**Scaling:** -	**Expert list:** 1
	Min	**Max**	**Factory setting**
	0	600	0

Description: The type of an existing drive object is entered into each index.

Value:

0: -
1: SINAMICS S
2: SINAMICS G
3: SINAMICS I
4: SINAMICS NX/CX32
5: SINAMICS GM
6: SINAMICS DC
7: SINAMICS GL
9: SINAMICS S110
10: ACTIVE INFEED CONTROL
11: SERVO
12: VECTOR
13: VECTORMV
14: VECTORGL
15: VECTOR3P
16: VECTORSL
17: DC_CTRL
18: VECTORM2C
19: VECTORDM
20: SMART INFEED CONTROL
30: BASIC INFEED CONTROL
35: BRAKE MODULE M2C
40: ACTIVE INFEED CONTROLMV
41: BASIC INFEED CONTROLMV
42: ACTIVE INFEED CONTROLM2C
51: SINAMICS G120 230 (SingleDO-Drive which combines Device+Vector)
52: SINAMICSG120 240_2 (SingleDO-Drive which combines Device+Vector)
54: SINAMICSG120 G120D(SingleDO-Drive which combines Device+Vector)
70: HLA
100: TB30 (Terminal Board)
101: SINAMICS SL
102: SINAMICS MV
150: DRIVE-CLiQ Hub Module
200: TM31 (Terminal Module)
201: TM41 (Terminal Module)
202: TM17 High Feature (Terminal Module)
203: TM15 (Terminal Module)
204: TM15 (Terminal Module for SINAMICS)
205: TM54F - Master (Terminal Module)
206: TM54F - Slave (Terminal Module)
207: TM120 (Terminal Module)
208: TM150 (Terminal Module)
254: CU-LINK
300: ENCODER
600: SINAMICS V60-G2 V80-G2

Index:

[0] = Drive object type, Control Unit
[1] = Drive object type, object 1
[2] = Drive object type, object 2
[3] = Drive object type, object 3
[4] = Drive object type, object 4
[5] = Drive object type, object 5
[6] = Drive object type, object 6

© Siemens AG 2012 All Rights Reserved

[7] = Drive object type, object 7
[8] = Drive object type, object 8
[9] = Drive object type, object 9
[10] = Drive object type, object 10
[11] = Drive object type, object 11
[12] = Drive object type, object 12
[13] = Drive object type, object 13
[14] = Drive object type, object 14
[15] = Drive object type, object 15
[16] = Drive object type, object 16
[17] = Drive object type, object 17
[18] = Drive object type, object 18
[19] = Drive object type, object 19
[20] = Drive object type, object 20
[21] = Drive object type, object 21
[22] = Drive object type, object 22
[23] = Drive object type, object 23

Dependency: Refer to: p0103, r0103

Caution: If you change this parameter and exit the device commissioning mode, then the complete software will be set up again and all of the previous drive parameter settings are deleted.

Note: The number (p0101) and the associated drive object type are in the same index.

For SINAMICS S a drive object type can only be changed between SERVO and VECTOR. If you change the parameter and exit drive start-up (p0009 from 2 to 0) the drive parameters are set up again.

r0108 Drive objects, function module / DO function module

B_INF

Can be changed: -	**Calculated:** -	**Access level:** 2
Data type: Unsigned32	**Dynamic index:** -	**Func. diagram:** -
P-Group: Closed-loop control	**Units group:** -	**Unit selection:** -
Not for motor type: -	**Scaling:** -	**Expert list:** 1
Min	**Max**	**Factory setting**
-	-	-

Description: Displays the activated function module for the particular drive object.

Bit field:

Bit	Signal name	1 signal	0 signal	FP
15	Parallel connection / Parallel	Activated	Not activated	-
18	Free function blocks / FBLOCKS	Activated	Not activated	-
26	Braking Module external / Brk Mod ext	Activated	Not activated	-
28	Cooling unit / Cool_unit	Activated	Not activated	-
31	PROFINET / PROFINET	Activated	Not activated	-

Note: A "function module" is a functional expansion of a drive object that can be activated when commissioning.

p0108[0...23] Drive objects, function module / DO function module

CU_G130_DP, CU_G130_PN, CU_G150_DP, CU_G150_PN

Can be changed: C1(2)	**Calculated:** -	**Access level:** 2
Data type: Unsigned32	**Dynamic index:** -	**Func. diagram:** -
P-Group: -	**Units group:** -	**Unit selection:** -
Not for motor type: -	**Scaling:** -	**Expert list:** 1
Min	**Max**	**Factory setting**
-	-	0000 0000 0000 0000 0000 0000 0000 0000 bin

Description: The function module of an existing drive object is entered into each index (see p0101, p0107).

The following bits are available for the Control Unit (Index 0):

Bit 18: Free function blocks

Bit 29: CAN

Bit 30: COMM BOARD

Bit 31: PROFINET

© Siemens AG 2012 All Rights Reserved

For all other drive objects (Index > 0), the significance of the bits should be taken from the display parameters r0108 of the drive object.

Index:
[0] = Function module Control Unit
[1] = Function module object 1
[2] = Function module object 2
[3] = Function module object 3
[4] = Function module object 4
[5] = Function module object 5
[6] = Function module object 6
[7] = Function module object 7
[8] = Function module object 8
[9] = Function module object 9
[10] = Function module object 10
[11] = Function module object 11
[12] = Function module object 12
[13] = Function module object 13
[14] = Function module object 14
[15] = Function module object 15
[16] = Function module object 16
[17] = Function module object 17
[18] = Function module object 18
[19] = Function module object 19
[20] = Function module object 20
[21] = Function module object 21
[22] = Function module object 22
[23] = Function module object 23

Bit field:

Bit	Signal name	1 signal	0 signal	FP
00	Bit 0	ON	OFF	-
01	Bit 1	ON	OFF	-
02	Bit 2	ON	OFF	-
03	Bit 3	ON	OFF	-
04	Bit 4	ON	OFF	-
05	Bit 5	ON	OFF	-
06	Bit 6	ON	OFF	-
07	Bit 7	ON	OFF	-
08	Bit 8	ON	OFF	-
09	Bit 9	ON	OFF	-
10	Bit 10	ON	OFF	-
11	Bit 11	ON	OFF	-
12	Bit 12	ON	OFF	-
13	Bit 13	ON	OFF	-
14	Bit 14	ON	OFF	-
15	Bit 15	ON	OFF	-
16	Bit 16	ON	OFF	-
17	Bit 17	ON	OFF	-
18	Bit 18	ON	OFF	-
19	Bit 19	ON	OFF	-
20	Bit 20	ON	OFF	-
21	Bit 21	ON	OFF	-
22	Bit 22	ON	OFF	-
23	Bit 23	ON	OFF	-
24	Bit 24	ON	OFF	-
25	Bit 25	ON	OFF	-
26	Bit 26	ON	OFF	-
27	Bit 27	ON	OFF	-
28	Bit 28	ON	OFF	-
29	Bit 29	ON	OFF	-
30	Bit 30	ON	OFF	-
31	Bit 31	ON	OFF	-

Note: A "function module" is a functional expansion of a drive object that can be activated when commissioning.

© Siemens AG 2012 All Rights Reserved

r0108 Drive objects, function module / DO function module

ENC

Can be changed: -	**Calculated:** -	**Access level:** 2
Data type: Unsigned32	**Dynamic index:** -	**Func. diagram:** -
P-Group: Closed-loop control	**Units group:** -	**Unit selection:** -
Not for motor type: -	**Scaling:** -	**Expert list:** 1
Min	**Max**	**Factory setting**
-	-	-

Description: Displays the activated function module for the particular drive object.

Bit field:

Bit	Signal name	1 signal	0 signal	FP
12	Linear encoder / Lin_enc	Activated	Not activated	-
18	Free function blocks / FBLOCKS	Activated	Not activated	-
31	PROFINET / PROFINET	Activated	Not activated	-

Note: A "function module" is a functional expansion of a drive object that can be activated when commissioning.

r0108 Drive objects, function module / DO function module

TB30, TM150, TM31

Can be changed: -	**Calculated:** -	**Access level:** 2
Data type: Unsigned32	**Dynamic index:** -	**Func. diagram:** -
P-Group: Closed-loop control	**Units group:** -	**Unit selection:** -
Not for motor type: -	**Scaling:** -	**Expert list:** 1
Min	**Max**	**Factory setting**
-	-	-

Description: Displays the activated function module for the particular drive object.

Bit field:

Bit	Signal name	1 signal	0 signal	FP
18	Free function blocks / FBLOCKS	Activated	Not activated	-
31	PROFINET / PROFINET	Activated	Not activated	-

Note: A "function module" is a functional expansion of a drive object that can be activated when commissioning.

r0108 Drive objects, function module / DO function module

VECTOR_G

Can be changed: -	**Calculated:** -	**Access level:** 2
Data type: Unsigned32	**Dynamic index:** -	**Func. diagram:** -
P-Group: Closed-loop control	**Units group:** -	**Unit selection:** -
Not for motor type: -	**Scaling:** -	**Expert list:** 1
Min	**Max**	**Factory setting**
-	-	-

Description: Displays the activated function module for the particular drive object.

Bit field:

Bit	Signal name	1 signal	0 signal	FP
02	Closed-loop speed/torque control / n/M	Activated	Not activated	-
08	Extended setpoint channel / Extended set	Activated	Not activated	-
13	Safety rotary axis / Safety rot	Activated	Not activated	-
14	Extended brake control / Extended brk	Activated	Not activated	-
15	Parallel connection / Parallel	Activated	Not activated	-
16	Technology controller / Tech_ctrl	Activated	Not activated	-
17	Extended messages/monitoring / Ext msg	Activated	Not activated	-
18	Free function blocks / FBLOCKS	Activated	Not activated	-
20	Software gating unit / SW_gating unit	Activated	Not activated	-
24	PM330 / PM330	Activated	Not activated	-
28	Cooling unit / Cool_unit	Activated	Not activated	-
29	CAN / CAN	Activated	Not activated	-
31	PROFINET / PROFINET	Activated	Not activated	-

Note: A "function module" is a functional expansion of a drive object that can be activated when commissioning.
The following bits are only automatically set, if the power units are detected with the appropriate properties.
Bit 16: Parallel connection of the same power units (only automatically set for G150/G130).
Bit 20: Software gating unit (only automatically set when power units are connected in parallel).
Bit 24: Type PM330 power units are presently not supported.

© Siemens AG 2012 All Rights Reserved

Bit 26: Type PM250 power units with F3E energy recovery are only supported for S120 CRANES.
Bit 28: Power units with liquid cooling.

r0110[0...2] Basic sampling times / t_basis

CU_G130_DP, CU_G130_PN, CU_G150_DP, CU_G150_PN

Can be changed: -	**Calculated:** -	**Access level:** 3
Data type: FloatingPoint32	**Dynamic index:** -	**Func. diagram:** -
P-Group: Closed-loop control	**Units group:** -	**Unit selection:** -
Not for motor type: -	**Scaling:** -	**Expert list:** 1
Min	**Max**	**Factory setting**
0.00 [µs]	10000.00 [µs]	- [µs]

Description: Displays the basic sampling times.
The sampling times are set using p0112 and p0115. The values for the basic sampling times are determined as a result of these settings.

Index: [0] = Basic sampling time 0
[1] = Basic sampling time 1
[2] = Basic sampling time 2

r0111 Basic sampling time selection / t_basis sel

B_INF, CU_G130_DP, CU_G130_PN, CU_G150_DP, CU_G150_PN, HUB, VECTOR_G

Can be changed: -	**Calculated:** -	**Access level:** 3
Data type: Integer16	**Dynamic index:** -	**Func. diagram:** -
P-Group: Closed-loop control	**Units group:** -	**Unit selection:** -
Not for motor type: -	**Scaling:** -	**Expert list:** 1
Min	**Max**	**Factory setting**
0	2	-

Description: Displays the selected basic sampling time for this drive object.

Dependency: Refer to: r0110

r0111 Basic sampling time selection / t_basis sel

TB30, TM31

Can be changed: -	**Calculated:** -	**Access level:** 3
Data type: Integer16	**Dynamic index:** -	**Func. diagram:** -
P-Group: Closed-loop control	**Units group:** -	**Unit selection:** -
Not for motor type: -	**Scaling:** -	**Expert list:** 1
Min	**Max**	**Factory setting**
0	2	-

Description: Displays the selected basic sampling time for this drive object.

Dependency: Refer to: r0110

Note: For TB30 and the Terminal Module, this parameter has no significance.
For TB30 and certain Terminal Modules, the sampling times can be set using p4099 (see description of p4099 for the Module in question).

p0112 Sampling times pre-setting p0115 / t_sample for p0115

B_INF

Can be changed: C1(3)	**Calculated:** -	**Access level:** 3
Data type: Integer16	**Dynamic index:** -	**Func. diagram:** -
P-Group: Closed-loop control	**Units group:** -	**Unit selection:** -
Not for motor type: -	**Scaling:** -	**Expert list:** 1
Min	**Max**	**Factory setting**
0	5	3

Description: Pre-assignment of the sampling times in p0115.
The clock cycles for the current controller / speed controller / flux controller / setpoint channel / position controller / positioning / technology controller are pre-assigned as follows:

© Siemens AG 2012 All Rights Reserved

SINAMICS S, servo drive:
p0112 = 1: 250 / 250 / 250 / 4000 / 2000 / 8000 / 4000 µs (for chassis units)
p0112 = 2: 125 / 250 / 250 / 4000 / 2000 / 8000 / 4000 µs
p0112 = 3: 125 / 125 / 125 / 4000 / 1000 / 4000 / 4000 µs
p0112 = 4: 62.5 / 62.5 / 62.5 / 1000 / 1000 / 2000 / 1000 µs
p0112 = 5: 31.25 / 31.25 / 31.25 / 1000 / 1000 / 2000 / 1000 µs
SINAMICS S, Active Infeed (p0112 = 1 not for p0092 = 1):
p0112 = 1: 400 / - / - / 1600 µs (pre-setting for the rated pulse frequency = 2.5 kHz)
p0112 = 2: 250 / - / - / 2000 µs (pre-setting for the rated pulse frequency = 4.0 kHz)
p0112 = 3: 125 / - / - / 2000 µs
p0112 = 4: 125 / - / - / 1000 µs
p0112 = 5: 125 / - / - / 500 µs
SINAMICS S, Smart Infeed (p0112 = 1 not for p0092 = 1):
p0112 = 1: 400 / - / - / 1600 µs (pre-setting for the rated pulse frequency = 2.5 kHz)
p0112 = 2: 250 / - / - / 2000 µs (pre-setting for the rated pulse frequency = 4.0 kHz)
p0112 = 3: 250 / - / - / 2000 µs
p0112 = 4: 250 / - / - / 1000 µs
p0112 = 5: Not possible
SINAMICS S, Basic Infeed, booksize:
p0112 = 4: 250 / - / - / 2000 µs
SINAMICS S, Basic Infeed, chassis:
p0112 = 1: 2000 / - / - / 2000 µs
p0112 = 2: 2000 / - / - / 2000 µs (pre-setting)
p0112 = 3: 2000 / - / - / 2000 µs
p0112 = 4: Not possible
p0112 = 5: Not possible
SINAMICS S/G, vector drive (p0112 = 1 not for p0092 = 1 and not for PM340):
p0112 = 1: 400 / 1600 / 1600 / 1600 / 3200 / 3200 / 3200 µs (for rated pulse frequency = 1.25, 2.5 kHz)
p0112 = 2: 250 / 1000 / 2000 / 1000 / 2000 / 4000 / 4000 µs
p0112 = 3: 250 / 1000 / 1000 / 1000 / 2000 / 4000 / 4000 µs (for rated pulse frequency = 2.0, 4.0 kHz)
SINAMICS S, vector drive:
p0112 = 4: 250 / 500 / 1000 / 500 / 1000 / 2000 / 2000 µs
p0112 = 5: 250 / 250 / 1000 / 500 / 1000 / 2000 / 1000 µs

Value:
0: Expert
1: xLow
2: Low
3: Standard
4: High
5: xHigh

Recommend.: When changing the sampling times of the current and speed controllers (also refer to p0115), then we recommend that after exiting commissioning (p0009 = 0) the controller settings are re-calculated using p0340 = 4.

Dependency: It is prohibited to select a parameter value from p0112 if the associated current controller clock cycle cannot set (e.g. p0112 = 1 is not possible for a vector drive and PM340 power unit).

If, for a servo drive, p112 = 5 is set, then the pulse frequency p1800 is preassigned 8 kHz. For D410-2 and vector drive, the current controller sampling time can only be permanently changed for p0112 = 0.

Refer to: p0092

Note: For p0112 = 0 (expert) the individual sampling times in p0115 can be adjusted.

The setting p0112 = 1 cannot be set for a vector drive with power unit type PM340 (refer to r0203).

© Siemens AG 2012 All Rights Reserved

p0112 Sampling times pre-setting p0115 / t_sample for p0115

VECTOR_G

Can be changed: C1(3)	**Calculated:** -	**Access level:** 3
Data type: Integer16	**Dynamic index:** -	**Func. diagram:** -
P-Group: Closed-loop control	**Units group:** -	**Unit selection:** -
Not for motor type: -	**Scaling:** -	**Expert list:** 1
Min	**Max**	**Factory setting**
0	3	3

Description:

Pre-assignment of the sampling times in p0115.

The clock cycles for the current controller / speed controller / flux controller / setpoint channel / position controller / positioning / technology controller are pre-assigned as follows:

SINAMICS S, servo drive:

p0112 = 1: 250 / 250 / 250 / 4000 / 2000 / 8000 / 4000 µs (for chassis units)

p0112 = 2: 125 / 250 / 250 / 4000 / 2000 / 8000 / 4000 µs

p0112 = 3: 125 / 125 / 125 / 4000 / 1000 / 4000 / 4000 µs

p0112 = 4: 62.5 / 62.5 / 62.5 / 1000 / 1000 / 2000 / 1000 µs

p0112 = 5: 31.25 / 31.25 / 31.25 / 1000 / 1000 / 2000 / 1000 µs

SINAMICS S, Active Infeed (p0112 = 1 not for p0092 = 1):

p0112 = 1: 400 / - / - / 1600 µs (pre-setting for the rated pulse frequency = 2.5 kHz)

p0112 = 2: 250 / - / - / 2000 µs (pre-setting for the rated pulse frequency = 4.0 kHz)

p0112 = 3: 125 / - / - / 2000 µs

p0112 = 4: 125 / - / - / 1000 µs

p0112 = 5: 125 / - / - / 500 µs

SINAMICS S, Smart Infeed (p0112 = 1 not for p0092 = 1):

p0112 = 1: 400 / - / - / 1600 µs (pre-setting for the rated pulse frequency = 2.5 kHz)

p0112 = 2: 250 / - / - / 2000 µs (pre-setting for the rated pulse frequency = 4.0 kHz)

p0112 = 3: 250 / - / - / 2000 µs

p0112 = 4: 250 / - / - / 1000 µs

p0112 = 5: Not possible

SINAMICS S, Basic Infeed, booksize:

p0112 = 4: 250 / - / - / 2000 µs

SINAMICS S, Basic Infeed, chassis:

p0112 = 1: 2000 / - / - / 2000 µs

p0112 = 2: 2000 / - / - / 2000 µs (pre-setting)

p0112 = 3: 2000 / - / - / 2000 µs

p0112 = 4: Not possible

p0112 = 5: Not possible

SINAMICS S/G, vector drive (p0112 = 1 not for p0092 = 1 and not for PM340):

p0112 = 1: 400 / 1600 / 1600 / 1600 / 3200 / 3200 / 3200 µs (for rated pulse frequency = 1.25, 2.5 kHz)

p0112 = 2: 250 / 1000 / 2000 / 1000 / 2000 / 4000 / 4000 µs

p0112 = 3: 250 / 1000 / 1000 / 1000 / 2000 / 4000 / 4000 µs (for rated pulse frequency = 2.0, 4.0 kHz)

SINAMICS S, vector drive:

p0112 = 4: 250 / 500 / 1000 / 500 / 1000 / 2000 / 2000 µs

p0112 = 5: 250 / 250 / 1000 / 500 / 1000 / 2000 / 1000 µs

Value:

0: Expert
1: xLow
2: Low
3: Standard

Recommend.:

When changing the sampling times of the current and speed controllers (also refer to p0115), then we recommend that after exiting commissioning (p0009 = 0) the controller settings are re-calculated using p0340 = 4.

Dependency:

It is prohibited to select a parameter value from p0112 if the associated current controller clock cycle cannot set (e.g. p0112 = 1 is not possible for a vector drive and PM340 power unit).

© Siemens AG 2012 All Rights Reserved

If, for a servo drive, p112 = 5 is set, then the pulse frequency p1800 is preassigned 8 kHz. For D410-2 and vector drive, the current controller sampling time can only be permanently changed for p0112 = 0.

Refer to: p0092

Note: For p0112 = 0 (expert) the individual sampling times in p0115 can be adjusted.

The setting p0112 = 1 cannot be set for a vector drive with power unit type PM340 (refer to r0203).

p0113 Minimum pulse frequency, selection / f_puls min sel

VECTOR_G

Can be changed: C1(3)	**Calculated:** -	**Access level:** 3
Data type: FloatingPoint32	**Dynamic index:** -	**Func. diagram:** -
P-Group: Closed-loop control	**Units group:** -	**Unit selection:** -
Not for motor type: -	**Scaling:** -	**Expert list:** 1
Min	**Max**	**Factory setting**
1.000 [kHz]	2.000 [kHz]	2.000 [kHz]

Description: The current controller sampling time (p0115[0]) is pre-assigned by selecting the minimum pulse frequency.

Dependency: The parameter can only be changed with p0112 = 0 (expert). For isochronous operation (p0092 = 1) the parameter can only be set so that a current controller clock cycle of 125 µs is obtained as an integer number.

The required pulse frequency can be set in p1800 after commissioning (p0009 = p0010 = 0).

Refer to: p0112, r0114, p0115, p1800

Note: The current controller sampling time (p0115[0]) is set to the inverse value of twice the minimum pulse frequency. For p0113 = 1.0 kHz, p0115[0] = 500 µs is set, for p0113 = 2.0 kHz, p0115[0] = 250 µs is set. The current controller sampling time (p0115[0]), calculated from the pulse frequency, is set in a grid of 1.25 µs.

For a power unit type PM340 (refer to r0203), only the values 1.0 and 2.0 kHz can be set. 1.0 kHz can be set in order to achieve a current controller clock cycle of 500µs. However, in this case, the minimum pulse frequency p1800 is limited to 2 kHz.

r0114[0...9] Minimum pulse frequency, recommended / f_puls min recom

VECTOR_G

Can be changed: -	**Calculated:** -	**Access level:** 3
Data type: FloatingPoint32	**Dynamic index:** -	**Func. diagram:** -
P-Group: Closed-loop control	**Units group:** -	**Unit selection:** -
Not for motor type: -	**Scaling:** -	**Expert list:** 1
Min	**Max**	**Factory setting**
- [kHz]	- [kHz]	- [kHz]

Description: Displays the recommended values (indices 0 and 1) for the minimum pulse frequency (p0113).

If the system rejects a change to p0113 because the value to be used lies outside the permitted value range, then instead the recommended value from r0114 can be used.

Index:
[0] = If only the actual drive is changed
[1] = If all drives connected to the DRIVE-CLiQ line are changed
[2] = 2. possible pulse frequency
[3] = 3. possible pulse frequency
[4] = 4. possible pulse frequency
[5] = 5. possible pulse frequency
[6] = 6. possible pulse frequency
[7] = 7. possible pulse frequency
[8] = 8. possible pulse frequency
[9] = 9. possible pulse frequency

Dependency: Refer to: p0113

Note: After exiting commissioning (p0009 = p0010 = 0), the pulse frequencies calculated from the sampling time p115[0] are displayed in indices 1 to 9. If additional restrictions do not apply (e.g. due to having selected an output filter), these can be entered into p1800. The maximum pulse frequency of the power units was already taken into account in r0114.

A value of 0 kHz does not define a recommended pulse frequency.

© Siemens AG 2012 All Rights Reserved

p0115[0...6] Sampling times for internal control loops / t_sample int ctrl

B_INF	**Can be changed:** C1(3)	**Calculated:** -	**Access level:** 3
	Data type: FloatingPoint32	**Dynamic index:** -	**Func. diagram:** -
	P-Group: Closed-loop control	**Units group:** -	**Unit selection:** -
	Not for motor type: -	**Scaling:** -	**Expert list:** 1
	Min	**Max**	**Factory setting**
	0.00 [µs]	16000.00 [µs]	[0] 125.00 [µs]
			[1] 125.00 [µs]
			[2] 125.00 [µs]
			[3] 4000.00 [µs]
			[4] 1000.00 [µs]
			[5] 4000.00 [µs]
			[6] 4000.00 [µs]

Description:
Sets the sampling times for the control loops.
The default setting is made using p0112 and can only be individually changed for p0112 = 0 (expert).

Recommend.:
When changing the sampling times of the current and speed controllers (also refer to p0115), then we recommend that after exiting commissioning (p0009 = 0) the controller settings are re-calculated using p0340 = 4.

Index:
[0] = Current controller
[1] = Speed controller
[2] = Flux controller
[3] = Setpoint channel
[4] = Pos controller
[5] = Positioning
[6] = Technology controller

Dependency:
The sampling times can only be separately set if p0112 is 0 (expert). If a sampling time is modified in the expert mode, then all of the sampling times with higher indices are automatically changed in the same ratio as the sampling time itself was changed. Slower time slices are only taken if the calculated sampling time is also permitted. Upper limit is 8 ms.
Higher-level controls must be calculated in integral ratios to lower-level controls (e.g. p0115[1] = N * p0115[0]; where N is an integer number). The sampling time of the speed controller (p0115[1]) can have as a maximum a value of 800% of the current controller sampling time (p0115[0]).
For servo drives, the maximum sampling time of the current controller is 250 µs and for vector drives, 500 µs.
The sampling times for setpoint channel (p0115[3]), position controller (p0115[4]), positioning (p0115[5]) and technology controller (p0115[6]) must have at least 2x the value of the current controller sampling time (p0115[0]).
Refer to: r0110, r0111, p0112

Note:
For function modules that can be activated (e.g. technology controller), the parameters values are pre-assigned.
For the Active Line Module (ALM) and Smart Line Module (SLM), the current and DC link voltage controllers operate with the same sampling time. For ALM/SLM the maximum current controller clock cycle is 400 µs.
For the Basic Line Module (BLM), the DC link voltage measurement operates in the current controller sampling time.
For BLM booksize, only the current controller sampling time of 250 µs is permitted. For BLM chassis, only the current controller sampling time of 2000 µs is permitted.
For power unit type PM340 (r0203), only current controller sampling times of 62.5 µs, 125 µs, 250 µs and 500 µs can be set. The maximum current controller clock cycle for servo drives and the minimum current controller clock cycle for vector drives is 250 µs.
If sampling times in p0115 are individually changed for p0112 = 0 (expert) then it must always be observed that the selected sampling times of the setpoint channel (p0115[3]), position controller (p0115[4]), positioning (p0115[5]) and technology controller (p0115[6]) are always greater than or equal to twice the current controller sampling time (p0115[0]).

© Siemens AG 2012 All Rights Reserved

p0115[0] Sampling time for supplementary functions / t_samp suppl_fct

CU_G130_DP, CU_G130_PN, CU_G150_DP, CU_G150_PN

Can be changed: C1(3)	**Calculated:** -	**Access level:** 3
Data type: FloatingPoint32	**Dynamic index:** -	**Func. diagram:** -
P-Group: Closed-loop control	**Units group:** -	**Unit selection:** -
Not for motor type: -	**Scaling:** -	**Expert list:** 1
Min	**Max**	**Factory setting**
0.00 [µs]	16000.00 [µs]	4000.00 [µs]

Description: Sets the basic sampling time for supplementary functions (DCC, free function blocks) on this object.
Only setting values that are an integer multiple of 125 µs are permissible.

Index: [0] = Basic sampl. time

p0115[0] Sampling time for speed detection / t_sample n_det

ENC

Can be changed: C1(3)	**Calculated:** -	**Access level:** 3
Data type: FloatingPoint32	**Dynamic index:** -	**Func. diagram:** -
P-Group: Closed-loop control	**Units group:** -	**Unit selection:** -
Not for motor type: -	**Scaling:** -	**Expert list:** 1
Min	**Max**	**Factory setting**
125.00 [µs]	500.00 [µs]	125.00 [µs]

Description: Sets the sampling times for speed detection.

Index: [0] = Basic sampl. time

p0115[0] Sampling time for supplementary functions / t_samp suppl_fct

TB30, TM150, TM31

Can be changed: C1(3)	**Calculated:** -	**Access level:** 3
Data type: FloatingPoint32	**Dynamic index:** -	**Func. diagram:** -
P-Group: Closed-loop control	**Units group:** -	**Unit selection:** -
Not for motor type: -	**Scaling:** -	**Expert list:** 1
Min	**Max**	**Factory setting**
0.00 [µs]	16000.00 [µs]	4000.00 [µs]

Description: Sets the sampling times for supplementary functions (DCC, free function blocks) on this object.
Only setting values that are an integer multiple of 125 µs are permissible.

Index: [0] = Basic sampl. time

Note: This parameter only applies to set the sampling times of possible supplementary functions.
The sampling times for inputs/outputs must be set in p4099.

p0115[0...6] Sampling times for internal control loops / t_sample int ctrl

VECTOR_G

Can be changed: C1(3)	**Calculated:** -	**Access level:** 3
Data type: FloatingPoint32	**Dynamic index:** -	**Func. diagram:** -
P-Group: Closed-loop control	**Units group:** -	**Unit selection:** -
Not for motor type: -	**Scaling:** -	**Expert list:** 1
Min	**Max**	**Factory setting**
0.00 [µs]	16000.00 [µs]	[0] 250.00 [µs]
		[1] 1000.00 [µs]
		[2] 1000.00 [µs]
		[3] 1000.00 [µs]
		[4] 2000.00 [µs]
		[5] 4000.00 [µs]
		[6] 4000.00 [µs]

Description: Sets the sampling times for the control loops.
The default setting is made using p0112 and can only be individually changed for p0112 = 0 (expert).

Recommend.: When changing the sampling times of the current and speed controllers (also refer to p0115), then we recommend that after exiting commissioning (p0009 = 0) the controller settings are re-calculated using p0340 = 4.

© Siemens AG 2012 All Rights Reserved

When adjusting the current controller sampling time, it is recommended to use values that are an integer multiple of 6.25 µs. The sampling times of analog or digital inputs/outputs (see p0799, p4099) should be set to an integer multiple of the current controller sampling time.

If the current controller sampling time is to be reduced with respect to the default setting (e.g. < 250 µs), then it is recommended that the motor data identification (standstill measurement) is executed beforehand, in order to avoid a thermal overload of the power unit as a result of high pulse frequencies (p1800).

Index:
[0] = Current controller
[1] = Speed controller
[2] = Flux controller
[3] = Setpoint channel
[4] = Pos controller
[5] = Positioning
[6] = Technology controller

Dependency:
Depending on the number and type of vector drives, the sampling times are preset differently.

The sampling times can only be separately set if p0112 is 0 (expert). If a sampling time is modified in the expert mode, then all of the sampling times with higher indices are automatically changed in the same ratio as the sampling time itself was changed. Slower time slices are only taken if the calculated sampling time is also permitted. Upper limit is 8 ms.

Higher-level controls must be calculated in integral ratios to lower-level controls (e.g. p0115[1] = N * p0115[0]; where N is an integer number). The sampling time of the speed controller (p0115[1]) can have as a maximum a value of 800% of the current controller sampling time (p0115[0]).

The sampling times for setpoint channel (p0115[3]), position controller (p0115[4]), positioning (p0115[5]) and technology controller (p0115[6]) must have at least 2x the value of the current controller sampling time (p0115[0]).

The sampling time of the current controller p0115[0] and pulse frequency p1800 are checked at each parameter download, and when necessary changed, if, for p0092 = 1, the current controller clock cycle is not an integral multiple of 125 µs or if p0112 is set > 1. For p0092 = 0, the check with p0112 = 0 (= expert) can be deactivated.

Refer to: r0110, r0111, p0112

Note:
For function modules that can be activated (e.g. technology controller), the parameters values are pre-assigned.

For power unit type PM340 (r0203), only current controller sampling times of 250 µs or 500 µs can be set. The minimum current controller clock cycle is otherwise 125 µs (SINAMICS G: 250 µs), the maximum current controller clock cycle is 500 µs. The minimum speed controller clock cycle for SINAMICS G is 1 ms.

Current controller clock cycles less than 250 µs are restricted by the number of drives or by the number of power units connected in parallel (also see F01340).

For chassis power units connected in parallel, it is recommended to connect the DRIVE-CLiQ cables (partially) in parallel between the Control Unit and the individual Motor Modules.

For D410-2, the current controller sampling times can only be permanently changed with p0112 = 0 (e.g. to 250 µs).

r0116[0...1] Drive object clock cycle recommended / DO_clock recom

B_INF, CU_G130_DP, CU_G130_PN, CU_G150_DP, CU_G150_PN, TB30, TM31, VECTOR_G

Can be changed: -	**Calculated:** -	**Access level:** 3
Data type: FloatingPoint32	**Dynamic index:** -	**Func. diagram:** -
P-Group: Closed-loop control	**Units group:** -	**Unit selection:** -
Not for motor type: -	**Scaling:** -	**Expert list:** 1

Min	Max	Factory setting
- [µs]	- [µs]	- [µs]

Description:
Displays the recommended sampling time for the drive objects.

r00116[0] = recommended sampling time:

Recommended value which would then make the complete system operational.

r00116[1] = recommended sampling time:

Recommended value, which after changing other clock cycles on the DRIVE-CLiQ line, would result in an operational system.

Index:
[0] = Change only for the actual drive object
[1] = Changing all objects on the DRIVE-CLiQ line

Dependency:
Refer to: p0115

© Siemens AG 2012 All Rights Reserved

p0117 Current controller computing dead time mode / I_ctrl t_dead mode

CU_G130_DP, CU_G130_PN, CU_G150_DP, CU_G150_PN	**Can be changed:** U, T	**Calculated:** -	**Access level:** 4
	Data type: Integer16	**Dynamic index:** -	**Func. diagram:** -
	P-Group: Closed-loop control	**Units group:** -	**Unit selection:** -
	Not for motor type: -	**Scaling:** -	**Expert list:** 1
	Min	**Max**	**Factory setting**
	0	6	6

Description:

Sets the mode for the computing dead time of the current controller.

0: Offset (shifted) clocking, minimum computing dead time of each drive, automatic setting

1: Clocking at the same time, the dead time aligns itself to the dead time of the latest drive, automatic setting

2: Manual setting of the computing dead time, early transfer

3: Manual setting of the computing dead time, late transfer

4-6: As for 0-2, however, no early transfers are set for vectors

Dependency:

Refer to: p0118

Refer to: A02100

Note:

The mode change is not effective until the drive unit is powered up again.

Re p0117 = 0:

The times when the setpoints become effective for the individual controls is automatically and individually determined. Another computing dead time is set for each control (closed-loop) (p0118). Current is impressed for the individual controls without any offset with respect to time (improved EMC compatibility).

Re p0117 = 1:

The latest closed-loop control determines when the setpoints for each of the individual controls become active. The same computing dead time is set for each control (p0118). Current is impressed (flows) for the individual controls without any offset with respect to time.

Re p0117 = 2:

The computing dead time is manually set. The user must optimize the value in p0118.

Re p0117 = 3:

The computing dead time is manually set. The user must optimize the value in p0118.

Re p0117 = 4 ... 6:

Behavior as for p0117 = 0 ... 2, however for vectors, the earliest times are not determined.

p0118 Current controller computing dead time / I_ctrl t_dead

B_INF, VECTOR_G	**Can be changed:** U, T	**Calculated:** -	**Access level:** 4
	Data type: FloatingPoint32	**Dynamic index:** -	**Func. diagram:** -
	P-Group: Closed-loop control	**Units group:** -	**Unit selection:** -
	Not for motor type: -	**Scaling:** -	**Expert list:** 1
	Min	**Max**	**Factory setting**
	0.00 [µs]	2000.00 [µs]	0.00 [µs]

Description:

This parameter is pre-set as a function of the current controller sampling time (p0115[0]) and normally does not have to be changed.

Dependency:

Refer to: p0117

Refer to: A02100

Note:

For p0118 <= 0.005 µs, the current controller output is delayed by a complete current controller clock cycle (p0115[0]).

After p0118 has been changed, we recommend that the current controller is adapted (p1715).

© Siemens AG 2012 All Rights Reserved

p0120 Number of Power unit Data Sets (PDS) / PDS count

B_INF, VECTOR_G	**Can be changed:** C1(3)	**Calculated:** -	**Access level:** 2
	Data type: Unsigned8	**Dynamic index:** -	**Func. diagram:** -
	P-Group: Data sets	**Units group:** -	**Unit selection:** -
	Not for motor type: -	**Scaling:** -	**Expert list:** 1
	Min	**Max**	**Factory setting**
	1	8	1

Description: Sets the number of Power unit Data Sets (PDS).
The value corresponds to the number of power units connected together for a parallel circuit configuration.

Dependency: Refer to: p0107, r0107

Note: This parameter is only significant for drive objects A_INFEED and VECTOR with a parallel circuit configuration.

p0121[0...n] Power unit component number / PU comp_no

B_INF, VECTOR_G	**Can be changed:** C1(4)	**Calculated:** -	**Access level:** 3
	Data type: Unsigned8	**Dynamic index:** PDS, p0120	**Func. diagram:** -
	P-Group: Data sets	**Units group:** -	**Unit selection:** -
	Not for motor type: -	**Scaling:** -	**Expert list:** 1
	Min	**Max**	**Factory setting**
	0	199	0

Description: The power unit data set is assigned to a power unit using this parameter.
This unique component number is assigned when parameterizing the topology.
Only component numbers can be entered into this parameter that correspond to a power unit.

Dependency: Refer to: p0107, r0107

Note: For parallel circuit configurations, the parameter index is assigned to a power unit.

p0124[0...n] Power unit detection via LED / PU detection LED

B_INF, VECTOR_G	**Can be changed:** U, T	**Calculated:** -	**Access level:** 2
	Data type: Unsigned8	**Dynamic index:** PDS, p0120	**Func. diagram:** -
	P-Group: Converter	**Units group:** -	**Unit selection:** -
	Not for motor type: -	**Scaling:** -	**Expert list:** 1
	Min	**Max**	**Factory setting**
	0	1	0

Description: Detects the power unit assigned to this drive and data set.

Note: While p0124 = 1, the READY LED flashes green/orange or red/orange with 2 Hz at the appropriate power unit.
For parallel circuit configurations, the parameter index is assigned to a power unit.

p0124[0...23] Main component detection using LED / M_comp detect LED

CU_G130_DP, CU_G130_PN, CU_G150_DP, CU_G150_PN	**Can be changed:** U, T	**Calculated:** -	**Access level:** 2
	Data type: Unsigned8	**Dynamic index:** -	**Func. diagram:** -
	P-Group: Converter	**Units group:** -	**Unit selection:** -
	Not for motor type: -	**Scaling:** -	**Expert list:** 1
	Min	**Max**	**Factory setting**
	0	1	0

Description: Detection of the main components of the drive object selected via the index.

© Siemens AG 2012 All Rights Reserved

p0125[0...n] Activate/de-activate power unit components / PU_comp act/deact

B_INF, VECTOR_G	**Can be changed:** C1(4), T	**Calculated:** -	**Access level:** 2
	Data type: Integer16	**Dynamic index:** PDS, p0120	**Func. diagram:** -
	P-Group: Data sets	**Units group:** -	**Unit selection:** -
	Not for motor type: -	**Scaling:** -	**Expert list:** 1
	Min	**Max**	**Factory setting**
	0	2	1

Description: Setting to activate/de-activate a power unit component.

Value:
0: De-activate component
1: Activate component
2: Component, de-activate and not present

Recommend.: After inserting a component, before activating, first wait for Alarm A01317.

Dependency: Refer to: r0126
Refer to: A01314, A01317

Caution: For a parallel connection, the following applies:
When deactivating individual power units using p0125, it is not permissible that the power units of the parallel connection involved are connected. Infeed units should be disconnected from the line supply (for example, using a contactor). Motor feeder cables should be disconnected. In addition, defective power units should be disconnected from the DC link.

Caution: It is not permissible to de-activate drive objects with safety functions enabled.

Note: The activation of a component can be rejected if the component was inserted for the first time. In this case, it is only possible to activate the component when the pulses for all of the drive objects are inhibited.
For units connected in parallel, when one of the power units is de-activated, then the enable in p7001 is withdrawn.
Re value = 0, 2:
When a component is deactivated it no longer outputs any errors.
If value = 0:
The component was completely commissioned and is deactivated using this value. It can be removed from the DRIVE-CLiQ without any error.
If value = 1:
The component must be available for error-free operation.
If value = 2:
A component in a project generated offline and set to this value must never be inserted in the actual topology from the very start. This means that the component is marked to be bypassed in the DRIVE-CLiQ line.
For components that comprise several individual components (e.g. Double Motor Modules), it is not permissible to set just one subset to this value.

r0126[0...n] Power unit components active/inactive / PU comp act/inact

B_INF, VECTOR_G	**Can be changed:** -	**Calculated:** -	**Access level:** 2
	Data type: Integer16	**Dynamic index:** PDS, p0120	**Func. diagram:** -
	P-Group: Data sets	**Units group:** -	**Unit selection:** -
	Not for motor type: -	**Scaling:** -	**Expert list:** 1
	Min	**Max**	**Factory setting**
	0	1	-

Description: Displays the "active/inactive" state of a power unit component.

Value:
0: Component inactive
1: Component active

Dependency: Refer to: p0105, p0125, p0897

© Siemens AG 2012 All Rights Reserved

r0127[0...n] Power unit version EPROM data / PU EPROM version

B_INF, VECTOR_G	**Can be changed:** -	**Calculated:** -	**Access level:** 3
	Data type: Unsigned32	**Dynamic index:** PDS, p0120	**Func. diagram:** -
	P-Group: Converter	**Units group:** -	**Unit selection:** -
	Not for motor type: -	**Scaling:** -	**Expert list:** 1
	Min	**Max**	**Factory setting**
	-	-	-

Description: Displays the version of the EPROM data of the power unit.

Dependency: Refer to: r0147, r0157

Note: For parallel circuit configurations, the parameter index is assigned to a power unit.

r0128[0...n] Power unit, firmware version / PU FW version

B_INF, VECTOR_G	**Can be changed:** -	**Calculated:** -	**Access level:** 3
	Data type: Unsigned32	**Dynamic index:** PDS, p0120	**Func. diagram:** -
	P-Group: Converter	**Units group:** -	**Unit selection:** -
	Not for motor type: -	**Scaling:** -	**Expert list:** 1
	Min	**Max**	**Factory setting**
	-	-	-

Description: Displays the firmware version of the power unit.

Dependency: Refer to: r0018, r0148, r0158, r0197, r0198

Note: Example:
The value 1010100 should be interpreted as V01.01.01.00.
For parallel circuit configurations, the parameter index is assigned to a power unit.

p0130 Number of Motor Data Sets (MDS) / MDS count

VECTOR_G	**Can be changed:** C1(3)	**Calculated:** -	**Access level:** 2
	Data type: Unsigned8	**Dynamic index:** -	**Func. diagram:** 8575
	P-Group: Data sets	**Units group:** -	**Unit selection:** -
	Not for motor type: -	**Scaling:** -	**Expert list:** 1
	Min	**Max**	**Factory setting**
	1	16	1

Description: Sets the number of Motor Data Sets (MDS).

p0131[0...n] Motor component number / Mot comp_no

VECTOR_G	**Can be changed:** C1(4)	**Calculated:** -	**Access level:** 3
	Data type: Unsigned8	**Dynamic index:** MDS, p0130	**Func. diagram:** -
	P-Group: Data sets	**Units group:** -	**Unit selection:** -
	Not for motor type: -	**Scaling:** -	**Expert list:** 1
	Min	**Max**	**Factory setting**
	0	199	0

Description: The motor data set is assigned to a motor using this parameter.
This unique component number is assigned when parameterizing the topology.
Only component numbers can be entered into this parameter that correspond to a motor.

© Siemens AG 2012 All Rights Reserved

p0139[0...2] Copy Motor Data Set MDS / Copy MDS

VECTOR_G

Can be changed: C2(15)	**Calculated:** -	**Access level:** 2
Data type: Unsigned8	**Dynamic index:** -	**Func. diagram:** 8575
P-Group: Data sets	**Units group:** -	**Unit selection:** -
Not for motor type: -	**Scaling:** -	**Expert list:** 1
Min	**Max**	**Factory setting**
0	31	0

Description: Copying a Motor Data Set (MDS) into another.

Index:
[0] = Source motor data set
[1] = Target motor data set
[2] = Start copying procedure

Note: Procedure:
1. In Index 0, enter which motor data set should be copied.
2. In Index 1, enter the motor data set data that is to be copied into.
3. Start copying: Set index 2 from 0 to 1.

p0139[2] is automatically set to 0 when copying is completed.
When copying, p0131 is not taken into account.

p0140 Number of Encoder Data Sets (EDS) / EDS count

ENC

Can be changed: C1(3)	**Calculated:** -	**Access level:** 2
Data type: Unsigned8	**Dynamic index:** -	**Func. diagram:** -
P-Group: Data sets	**Units group:** -	**Unit selection:** -
Not for motor type: -	**Scaling:** -	**Expert list:** 1
Min	**Max**	**Factory setting**
1	1	1

Description: Sets the number of Encoder Data Sets (EDS).

Note: When parameterizing the drive with "no encoder" there must be at least one encoder data set (p0140 >= 1).

p0140 Number of Encoder Data Sets (EDS) / EDS count

VECTOR_G

Can be changed: C1(3)	**Calculated:** -	**Access level:** 2
Data type: Unsigned8	**Dynamic index:** -	**Func. diagram:** -
P-Group: Data sets	**Units group:** -	**Unit selection:** -
Not for motor type: -	**Scaling:** -	**Expert list:** 1
Min	**Max**	**Factory setting**
1	16	1

Description: Sets the number of Encoder Data Sets (EDS).

Note: When parameterizing the drive with "no encoder" there must be at least one encoder data set (p0140 >= 1).

p0141[0...n] Encoder interface (Sensor Module) component number / Enc_interf comp_no

ENC, VECTOR_G

Can be changed: C1(4)	**Calculated:** -	**Access level:** 3
Data type: Unsigned8	**Dynamic index:** EDS, p0140	**Func. diagram:** 4704, 8570
P-Group: Data sets	**Units group:** -	**Unit selection:** -
Not for motor type: -	**Scaling:** -	**Expert list:** 1
Min	**Max**	**Factory setting**
0	199	0

Description: This parameter is used to assign the encoder data set to an encoder evaluation (e.g. SMC).
This unique component number is assigned when parameterizing the topology.
Only component numbers can be entered into this parameter that correspond to an encoder evaluation.

Note: If the encoder evaluation and encoder are integrated (motor with DRIVE-CLiQ), then their component numbers are identical.
For an SMC, different component numbers are assigned for the SMC (p0141) and the (actual) encoder (p0142).

© Siemens AG 2012 All Rights Reserved

p0142[0...n] Encoder component number / Encoder comp_no

ENC, VECTOR_G	**Can be changed:** C1(4)	**Calculated:** -	**Access level:** 3
	Data type: Unsigned8	**Dynamic index:** EDS, p0140	**Func. diagram:** 4704
	P-Group: Data sets	**Units group:** -	**Unit selection:** -
	Not for motor type: -	**Scaling:** -	**Expert list:** 1
	Min	**Max**	**Factory setting**
	0	199	0

Description: This parameter is used to assign the encoder data set to an encoder.

This assignment is made using the unique component number that was assigned when parameterizing the topology.

Only component numbers can be entered into this parameter that correspond to an encoder.

Note: If the encoder evaluation and encoder are integrated (motor with DRIVE-CLiQ), then their component numbers are identical.

For an SMC, different component numbers are assigned for the SMC (p0141) and the (actual) encoder (p0142).

p0144[0...n] Sensor Module detection via LED / SM detection LED

ENC, VECTOR_G	**Can be changed:** U, T	**Calculated:** -	**Access level:** 2
	Data type: Unsigned8	**Dynamic index:** EDS, p0140	**Func. diagram:** -
	P-Group: Encoder	**Units group:** -	**Unit selection:** -
	Not for motor type: -	**Scaling:** -	**Expert list:** 1
	Min	**Max**	**Factory setting**
	0	1	0

Description: Detects the Sensor Module assigned to this drive and data set.

Note: While p0144 = 1, the READY LED flashes green/orange or red/orange with 2 Hz at the appropriate Sensor Module.

p0145[0...n] Activate/de-activate encoder interface / Enc_intf act/deact

ENC, VECTOR_G	**Can be changed:** C1(4), U, T	**Calculated:** -	**Access level:** 2
	Data type: Integer16	**Dynamic index:** EDS, p0140	**Func. diagram:** -
	P-Group: Data sets	**Units group:** -	**Unit selection:** -
	Not for motor type: -	**Scaling:** -	**Expert list:** 1
	Min	**Max**	**Factory setting**
	0	2	1

Description: Setting to activate/de-activate an encoder interface (Sensor Module).

Value:
0: De-activate component
1: Activate component
2: Component, de-activate and not present

Recommend.: After inserting a component, before activating, first wait for Alarm A01317.

Dependency: Refer to: r0146

Refer to: A01314, A01317

Note: The de-activation of an encoder interface corresponds to the"parking encoder" function and has the same effect.

The activation of a component can be rejected if the component was inserted for the first time.

In this case, it is only possible to activate the component when the pulses for all of the drive objects are inhibited.

With the encoder interface for encoder 1 (motor encoder), the relevant drive object for writing the parameter must be in the "Ready for operation" state.

With the encoder interface for encoders 2 and 3, the parameter can also be written during operation.

Re value = 0, 2:

When a component is deactivated it no longer outputs any errors.

If value = 0:

The component was completely commissioned and is deactivated using this value. It can be removed from the DRIVE-CLiQ without any error.

If value = 1:

The component must be available for error-free operation.

© Siemens AG 2012 All Rights Reserved

If value = 2:

A component in a project generated offline and set to this value must never be inserted in the actual topology from the very start.

For components that comprise several individual components (e.g. Double Motor Modules), it is not permissible to set just one subset to this value.

r0146[0...n] Encoder interface active/inactive / Enc_intf act/inact

ENC, VECTOR_G

Can be changed: -	**Calculated:** -	**Access level:** 2
Data type: Integer16	**Dynamic index:** EDS, p0140	**Func. diagram:** -
P-Group: Data sets	**Units group:** -	**Unit selection:** -
Not for motor type: -	**Scaling:** -	**Expert list:** 1
Min	**Max**	**Factory setting**
0	1	-

Description: Displays the "active" or "inactive" state of an encoder interface (Sensor Module).

Value:
0: Component inactive
1: Component active

Dependency: Refer to: p0105, p0145, p0480, p0897

r0147[0...n] Sensor Module EEPROM data version / SM EEPROM version

ENC, VECTOR_G

Can be changed: -	**Calculated:** -	**Access level:** 3
Data type: Unsigned32	**Dynamic index:** EDS, p0140	**Func. diagram:** -
P-Group: Encoder	**Units group:** -	**Unit selection:** -
Not for motor type: -	**Scaling:** -	**Expert list:** 1
Min	**Max**	**Factory setting**
-	-	-

Description: Displays the version of the EEPROM data of the Sensor Module.

Dependency: Refer to: r0127, r0157

Note: Example:
The value 1010100 should be interpreted as V01.01.01.00.

r0148[0...n] Sensor Module firmware version / SM FW version

ENC, VECTOR_G

Can be changed: -	**Calculated:** -	**Access level:** 3
Data type: Unsigned32	**Dynamic index:** EDS, p0140	**Func. diagram:** -
P-Group: Encoder	**Units group:** -	**Unit selection:** -
Not for motor type: -	**Scaling:** -	**Expert list:** 1
Min	**Max**	**Factory setting**
-	-	-

Description: Displays the firmware version of the Sensor Module.

Dependency: Refer to: r0018, r0128, r0158, r0197, r0198

Note: Example:
The value 1010100 should be interpreted as V01.01.01.00.

p0150 Number of VSM data sets / VSM dat_sets qty.

VECTOR_G

Can be changed: C1(3)	**Calculated:** -	**Access level:** 4
Data type: Unsigned8	**Dynamic index:** -	**Func. diagram:** -
P-Group: Data sets	**Units group:** -	**Unit selection:** -
Not for motor type: -	**Scaling:** -	**Expert list:** 1
Min	**Max**	**Factory setting**
1	2	1

Description: Sets the number of VSM data sets.

© Siemens AG 2012 All Rights Reserved

p0151[0...1] DRIVE-CLiQ Hub Module component number / Hub comp_no

HUB

Can be changed: C1(4)	**Calculated:** -	**Access level:** 3
Data type: Unsigned8	**Dynamic index:** -	**Func. diagram:** -
P-Group: Data sets	**Units group:** -	**Unit selection:** -
Not for motor type: -	**Scaling:** -	**Expert list:** 1
Min	**Max**	**Factory setting**
0	199	0

Description: This parameter is used to assign the data set to a DRIVE-CLiQ Hub Module.
This unique component number is assigned when parameterizing the topology.
Only the numbers of components operated as hubs can be entered in these parameters.
[0] = DRIVE-CLiQ node 1
[1] = DRIVE-CLiQ node 2

p0151 Terminal Module component number / TM comp_no

TM150, TM31, TM54F_MA, TM54F_SL

Can be changed: C1(4)	**Calculated:** -	**Access level:** 3
Data type: Unsigned8	**Dynamic index:** -	**Func. diagram:** -
P-Group: Data sets	**Units group:** -	**Unit selection:** -
Not for motor type: -	**Scaling:** -	**Expert list:** 1
Min	**Max**	**Factory setting**
0	199	0

Description: Sets the component number for the Terminal Module.
This unique component number is assigned when parameterizing the topology.
Only component numbers can be entered into this parameter that correspond to a Terminal Module.

p0151[0...n] Voltage Sensing Module component number / VSM comp_no

VECTOR_G

Can be changed: C1(4)	**Calculated:** -	**Access level:** 3
Data type: Unsigned8	**Dynamic index:** p0150	**Func. diagram:** -
P-Group: Data sets	**Units group:** -	**Unit selection:** -
Not for motor type: -	**Scaling:** -	**Expert list:** 1
Min	**Max**	**Factory setting**
0	199	0

Description: The VSM data set is assigned to a VSM evaluation using this parameter.

Note: If two VSM are connected at the Motor Module, then the first (p0151[0]) is assigned to the line voltage measurement (see p3801) and the second, to the motor voltage measurement (see p1200).

p0154 DRIVE-CLiQ Hub Module detection via LED / Hub detection LED

HUB

Can be changed: U, T	**Calculated:** -	**Access level:** 2
Data type: Unsigned8	**Dynamic index:** -	**Func. diagram:** -
P-Group: Encoder	**Units group:** -	**Unit selection:** -
Not for motor type: -	**Scaling:** -	**Expert list:** 1
Min	**Max**	**Factory setting**
0	1	0

Description: Detects any DRIVE-CLiQ Hub Module that has been assigned.

© Siemens AG 2012 All Rights Reserved

p0154 Terminal Module detection via LED / TM detection LED

TM150, TM31, TM54F_MA, TM54F_SL

Can be changed: U, T	**Calculated:** -	**Access level:** 2
Data type: Unsigned8	**Dynamic index:** -	**Func. diagram:** -
P-Group: Terminals	**Units group:** -	**Unit selection:** -
Not for motor type: -	**Scaling:** -	**Expert list:** 1
Min	**Max**	**Factory setting**
0	1	0

Description: Detects the Terminal Module assigned to this drive and data set.

Note: While p0154 = 1, the READY LED flashes green/orange or red/orange with 2 Hz at the appropriate Terminal Module.

p0155[0...n] Voltage Sensing Module, activate/de-activate / VSM act/deact

VECTOR_G

Can be changed: C1(4), T	**Calculated:** -	**Access level:** 2
Data type: Integer16	**Dynamic index:** p0150	**Func. diagram:** -
P-Group: Data sets	**Units group:** -	**Unit selection:** -
Not for motor type: -	**Scaling:** -	**Expert list:** 1
Min	**Max**	**Factory setting**
0	2	1

Description: Setting to activate/de-activate a Voltage Sensing Module (VSM).

Value:
0: De-activate component
1: Activate component
2: Component, de-activate and not present

Recommend.: After inserting a component, before activating, first wait for Alarm A01317.

Dependency: Refer to: r0156
Refer to: A01314, A01317

r0156[0...n] Voltage Sensing Module, active/inactive / VSM act/inact

VECTOR_G

Can be changed: -	**Calculated:** -	**Access level:** 2
Data type: Integer16	**Dynamic index:** p0150	**Func. diagram:** -
P-Group: Data sets	**Units group:** -	**Unit selection:** -
Not for motor type: -	**Scaling:** -	**Expert list:** 1
Min	**Max**	**Factory setting**
0	1	-

Description: Displays the "active" or "inactive" state of a Voltage Sensing Module (VSM).

Value:
0: Component inactive
1: Component active

Dependency: Refer to: p0155

r0157 DRIVE-CLiQ Hub Module EPROM data version / Hub EPROM version

HUB

Can be changed: -	**Calculated:** -	**Access level:** 3
Data type: Unsigned32	**Dynamic index:** -	**Func. diagram:** -
P-Group: Terminals	**Units group:** -	**Unit selection:** -
Not for motor type: -	**Scaling:** -	**Expert list:** 1
Min	**Max**	**Factory setting**
-	-	-

Description: Displays the version of the EPROM data for the DRIVE-CLiQ Hub Module.

Note: Example:
The value 1010100 should be interpreted as V01.01.01.00.

© Siemens AG 2012 All Rights Reserved

r0157 Terminal Module EPROM data version / TM EPROM version

TM150, TM31, TM54F_MA, TM54F_SL

Can be changed: -	**Calculated:** -	**Access level:** 3
Data type: Unsigned32	**Dynamic index:** -	**Func. diagram:** -
P-Group: Terminals	**Units group:** -	**Unit selection:** -
Not for motor type: -	**Scaling:** -	**Expert list:** 1
Min	**Max**	**Factory setting**
-	-	-

Description: Displays the version of the EPROM data of the Terminal Module.

Dependency: Refer to: r0127, r0147

Note: Example:
The value 1010100 should be interpreted as V01.01.01.00.

r0157[0...n] Voltage Sensing Module, EPROM data version / VSM EPROM version

VECTOR_G

Can be changed: -	**Calculated:** -	**Access level:** 3
Data type: Unsigned32	**Dynamic index:** p0150	**Func. diagram:** -
P-Group: Encoder	**Units group:** -	**Unit selection:** -
Not for motor type: -	**Scaling:** -	**Expert list:** 1
Min	**Max**	**Factory setting**
-	-	-

Description: Displays the version of the EPROM data of the Voltage Sensing Module (VSM).

Note: Example:
The value 1010100 should be interpreted as V01.01.01.00.

r0158 DRIVE-CLiQ Hub Module firmware version / Hub FW version

HUB

Can be changed: -	**Calculated:** -	**Access level:** 3
Data type: Unsigned32	**Dynamic index:** -	**Func. diagram:** -
P-Group: Terminals	**Units group:** -	**Unit selection:** -
Not for motor type: -	**Scaling:** -	**Expert list:** 1
Min	**Max**	**Factory setting**
-	-	-

Description: Displays the firmware version of the DRIVE-CLiQ Hub Module.

r0158 Terminal Module firmware version / TM FW version

TM150, TM31, TM54F_MA, TM54F_SL

Can be changed: -	**Calculated:** -	**Access level:** 3
Data type: Unsigned32	**Dynamic index:** -	**Func. diagram:** -
P-Group: Terminals	**Units group:** -	**Unit selection:** -
Not for motor type: -	**Scaling:** -	**Expert list:** 1
Min	**Max**	**Factory setting**
-	-	-

Description: Displays the firmware version of the Terminal Module.

Dependency: Refer to: r0018, r0128, r0148, r0197, r0198

Note: Example:
The value 1010100 should be interpreted as V01.01.01.00.

© Siemens AG 2012 All Rights Reserved

r0158[0...n] Voltage Sensing Module firmware version / VSM FW version

VECTOR_G

Can be changed: -	**Calculated:** -	**Access level:** 3
Data type: Unsigned32	**Dynamic index:** p0150	**Func. diagram:** -
P-Group: Encoder	**Units group:** -	**Unit selection:** -
Not for motor type: -	**Scaling:** -	**Expert list:** 1
Min	**Max**	**Factory setting**
-	-	-

Description: Displays the firmware version of the Voltage Sensing Module (VSM).

Dependency: Refer to: r0018, r0128, r0197, r0198

Note: Example:
The value 1010100 should be interpreted as V01.01.01.00.

p0161 Option board, component number / Opt board comp_no

TB30

Can be changed: C1(4)	**Calculated:** -	**Access level:** 4
Data type: Unsigned8	**Dynamic index:** -	**Func. diagram:** 9100
P-Group: Data sets	**Units group:** -	**Unit selection:** -
Not for motor type: -	**Scaling:** -	**Expert list:** 1
Min	**Max**	**Factory setting**
0	199	0

Description: Sets the component number for the option board (e.g. Terminal Board 30).
This unique component number is assigned when parameterizing the topology.
Only component numbers can be entered into this parameter that correspond to an option board.

p0170 Number of Command Data Sets (CDS) / CDS count

B_INF

Can be changed: C1(3)	**Calculated:** -	**Access level:** 2
Data type: Unsigned8	**Dynamic index:** -	**Func. diagram:** -
P-Group: Commands	**Units group:** -	**Unit selection:** -
Not for motor type: -	**Scaling:** -	**Expert list:** 1
Min	**Max**	**Factory setting**
1	2	1

Description: Sets the number of Command Data Sets (CDS).

Note: It is possible to toggle between command parameters (BICO parameters) using this data set changeover.

p0170 Number of Command Data Sets (CDS) / CDS count

VECTOR_G

Can be changed: C1(3)	**Calculated:** -	**Access level:** 2
Data type: Unsigned8	**Dynamic index:** -	**Func. diagram:** -
P-Group: Commands	**Units group:** -	**Unit selection:** -
Not for motor type: -	**Scaling:** -	**Expert list:** 1
Min	**Max**	**Factory setting**
2	4	2

Description: Sets the number of Command Data Sets (CDS).

Note: It is possible to toggle between command parameters (BICO parameters) using this data set changeover.

p0180 Number of Drive Data Sets (DDS) / DDS count

VECTOR_G

Can be changed: C1(3)	**Calculated:** -	**Access level:** 2
Data type: Unsigned8	**Dynamic index:** -	**Func. diagram:** 8565
P-Group: Data sets	**Units group:** -	**Unit selection:** -
Not for motor type: -	**Scaling:** -	**Expert list:** 1
Min	**Max**	**Factory setting**
1	32	1

Description: Sets the number of Drive Data Sets (DDS).

© Siemens AG 2012 All Rights Reserved

p0186[0...n] Motor Data Sets (MDS) number / MDS number

VECTOR_G

Can be changed: C1(4)	**Calculated:** -	**Access level:** 3
Data type: Unsigned8	**Dynamic index:** DDS, p0180	**Func. diagram:** 8575
P-Group: Data sets	**Units group:** -	**Unit selection:** -
Not for motor type: -	**Scaling:** -	**Expert list:** 1
Min	**Max**	**Factory setting**
0	15	0

Description: Using the parameter, each Drive Data Set (= index) is assigned the associated Motor Data Set (MDS).
The parameter value therefore corresponds to the number of the assigned motor data set.

p0187[0...n] Encoder 1 encoder data set number / Enc 1 EDS number

VECTOR_G

Can be changed: C1(4)	**Calculated:** -	**Access level:** 3
Data type: Unsigned8	**Dynamic index:** DDS, p0180	**Func. diagram:** 1580, 8570
P-Group: Data sets	**Units group:** -	**Unit selection:** -
Not for motor type: -	**Scaling:** -	**Expert list:** 1
Min	**Max**	**Factory setting**
0	99	99

Description: Assign a drive data set (= index) the corresponding encoder data set (EDS) for encoder 1.
The value corresponds to the number of the assigned encoder data set.
Example:
Encoder 1 in drive data set 2 should be assigned to encoder data set 0.
--> p0187[2] = 0

Note: A value of 99 means that no encoder has been assigned to this drive data set (not configured).

p0188[0...n] Encoder 2 encoder data set number / Enc 2 EDS number

VECTOR_G

Can be changed: C1(4)	**Calculated:** -	**Access level:** 3
Data type: Unsigned8	**Dynamic index:** DDS, p0180	**Func. diagram:** 1580, 8570
P-Group: Data sets	**Units group:** -	**Unit selection:** -
Not for motor type: -	**Scaling:** -	**Expert list:** 1
Min	**Max**	**Factory setting**
0	99	99

Description: Assign a drive data set (= index) the corresponding encoder data set (EDS) for encoder 2.
The value corresponds to the number of the assigned encoder data set.
Example:
Encoder 2 in drive data set 2 should be assigned to encoder data set 1.
--> p0188[2] = 1

Note: A value of 99 means that no encoder has been assigned to this drive data set (not configured).

p0189[0...n] Encoder 3 encoder data set number / Enc 3 EDS number

VECTOR_G

Can be changed: C1(4)	**Calculated:** -	**Access level:** 3
Data type: Unsigned8	**Dynamic index:** DDS, p0180	**Func. diagram:** 1580, 8570
P-Group: Data sets	**Units group:** -	**Unit selection:** -
Not for motor type: -	**Scaling:** -	**Expert list:** 1
Min	**Max**	**Factory setting**
0	99	99

Description: Assign a drive data set (= index) the corresponding encoder data set (EDS) for encoder 3.
The value corresponds to the number of the assigned encoder data set.

Note: A value of 99 means that no encoder has been assigned to this drive data set (not configured).

© Siemens AG 2012 All Rights Reserved

r0192 Power unit firmware properties / PU FW property

B_INF, VECTOR_G

Can be changed: -	**Calculated:** -	**Access level:** 3
Data type: Unsigned32	**Dynamic index:** -	**Func. diagram:** -
P-Group: Converter	**Units group:** -	**Unit selection:** -
Not for motor type: -	**Scaling:** -	**Expert list:** 1
Min	**Max**	**Factory setting**
-	-	-

Description: Displays the properties supported by the power unit firmware.

Bit field:

Bit	Signal name	1 signal	0 signal	FP
00	Edge modulation possible	Yes	No	-
01	Free telegram can be selected	Yes	No	-
02	Smart mode possible for Active Line Module	Yes	No	-
03	Safety Integrated possible for VECTOR	Yes	No	-
06	Liquid cooling	Yes	No	-
07	SERVO pulse frequency changeover, DDS-dependent	Yes	No	-
08	Simulation mode possible	Yes	No	-
09	Internal armature short-circuit possible	Yes	No	-
10	Autonomous internal armature short-circuit possible	Yes	No	-
11	Infeed temperature inputs X21.1/2	Yes	No	-
12	Integral scaled to half the gating unit clock cycle freq.	Yes	No	-
13	Filtering thermal power unit current limit possible	Yes	No	-
14	DC link compensation possible in power unit	Yes	No	-
15	PT100 temperature evaluation possible	Yes	No	-
16	Gating unit with pulse frequency wobbulation possible	Yes	No	-
17	Compound braking possible	Yes	No	-
18	Extended voltage range possible	Yes	No	-
19	Gating unit available with current limitation control	Yes	No	-
20	Component status possible	Yes	No	-
21	Temperature evaluation via Motor Module / CU terminals possible	Yes	No	-
22	Reduced device supply voltage possible	Yes	No	-
23	Current measurement oversampling available	Yes	No	-
24	Parking keeping the relevant data is available	Yes	No	-
25	Internal fan operating hours counter available	Yes	No	-
26	Software gating unit in the CU is supported	Yes	No	-
27	Current controller dynamics higher	Yes	No	-

Notice: This information represents the characteristics/features of the power unit firmware. It does not provide information/data about the characteristics/features of the hardware (e.g. bit 06 = 1 means that although the firmware supports "liquid cooling", a power unit with liquid cooling does not have to be used).

Note: Re bit 09:

The Motor Module supports the internal armature short-circuit. The function is internally required for voltage protection (p1231 = 3).

Re bit 10:

The Motor Module supports the autonomous internal voltage protection.

If the "internal voltage protection" function is activated (p1231 = 3) the Motor Module decides autonomously - using the DC link voltage - as to whether the short-circuit is activated.

Re bit 23:

The component supports the detection of current actual values (and the detection of valve close durations) with double clocking and phase shift.

© Siemens AG 2012 All Rights Reserved

r0194[0...n] VSM properties / VSM properties

VECTOR_G

Can be changed: -	**Calculated:** -	**Access level:** 4
Data type: Unsigned32	**Dynamic index:** p0150	**Func. diagram:** -
P-Group: Encoder	**Units group:** -	**Unit selection:** -
Not for motor type: -	**Scaling:** -	**Expert list:** 1
Min	**Max**	**Factory setting**
-	-	-

Description: Displays the properties supported by the Voltage Sensing Module (VSM).

Bit field:

Bit	Signal name	1 signal	0 signal	FP
00	Reserved	Yes	No	-

r0196[0...255] DRIVE-CLiQ component status / DLQ comp status

CU_G130_DP, CU_G130_PN, CU_G150_DP, CU_G150_PN

Can be changed: -	**Calculated:** -	**Access level:** 3
Data type: Unsigned32	**Dynamic index:** -	**Func. diagram:** -
P-Group: -	**Units group:** -	**Unit selection:** -
Not for motor type: -	**Scaling:** -	**Expert list:** 1
Min	**Max**	**Factory setting**
-	-	-

Description: Displays the status of DRIVE-CLiQ components.
r0196[0...1]: Not used
r0196[2]: Status of DRIVE-CLiQ component with component number 2
...
r0196[255]: Status of DRIVE-CLiQ component with component number 255

Note: Structure of status value: Bits 31 ... 08, 07, 06 ... 04, 03 ... 00
Re Bit 31 ... 08: Reserved
Re Bit 07: 1: Part of target topology, 0: Only in actual topology
Re Bit 06 ... 04: 1: Active, 0: Inactive or parked
Re bit 03 ... 00:
0: Component data not available.
1: Power-up, acyclic DRIVE-CLiQ communication (LED = orange).
2: Ready for operation, cyclic DRIVE-CLiQ communication (LED = green).
3: Alarm (LED = green).
4: Fault (LED = red).
5: Detection via LED and ready for operation (LED = green/orange).
6: Detection via LED and alarm (LED = green/orange).
7: Detection via LED and fault (LED = red/orange).
8: Downloading firmware (LED = green/red at 0.5 Hz).
9: Firmware downloading completed, Waiting for POWER ON (LED = green/red at 2.0 Hz).

r0197 Bootloader vers / Bootloader vers

CU_G130_DP, CU_G130_PN, CU_G150_DP, CU_G150_PN

Can be changed: -	**Calculated:** -	**Access level:** 4
Data type: Unsigned32	**Dynamic index:** -	**Func. diagram:** -
P-Group: Closed-loop control	**Units group:** -	**Unit selection:** -
Not for motor type: -	**Scaling:** -	**Expert list:** 1
Min	**Max**	**Factory setting**
-	-	-

Description: Displays the bootloader version.

Dependency: Refer to: r0018, r0128, r0148, r0158, r0198

Note: Example:
The value 1010100 should be interpreted as V01.01.01.00.

© Siemens AG 2012 All Rights Reserved

r0198[0...1] BIOS/EEPROM data version / BIOS/EEPROM vers

CU_G130_DP, CU_G130_PN, CU_G150_DP, CU_G150_PN	**Can be changed:** -	**Calculated:** -	**Access level:** 4
	Data type: Unsigned32	**Dynamic index:** -	**Func. diagram:** -
	P-Group: Closed-loop control	**Units group:** -	**Unit selection:** -
	Not for motor type: -	**Scaling:** -	**Expert list:** 1
	Min	**Max**	**Factory setting**
	-	-	-

Description: Displays the BIOS and EEPROM data version.
r0198[0]: BIOS version
r0198[1]: EEPROM data version

Dependency: Refer to: r0018, r0128, r0148, r0158, r0197

Note: Example:
The value 1010100 should be interpreted as V01.01.01.00.

p0199[0...24] Drive object name / DO name

All objects	**Can be changed:** C1	**Calculated:** -	**Access level:** 2
	Data type: Unsigned16	**Dynamic index:** -	**Func. diagram:** -
	P-Group: -	**Units group:** -	**Unit selection:** -
	Not for motor type: -	**Scaling:** -	**Expert list:** 1
	Min	**Max**	**Factory setting**
	0	65535	0

Description: Freely assignable name for a drive object.
In the commissioning software, this name cannot be entered using the expert list, but is specified in the configuration assistant. The object name can be subsequently modified in the Project Navigator using standard Windows resources.

Note: The parameter is not influenced by setting the factory setting.

r0200[0...n] Power unit code number actual / PU code no. act

B_INF, VECTOR_G	**Can be changed:** -	**Calculated:** -	**Access level:** 3
	Data type: Unsigned16	**Dynamic index:** PDS, p0120	**Func. diagram:** -
	P-Group: Converter	**Units group:** -	**Unit selection:** -
	Not for motor type: -	**Scaling:** -	**Expert list:** 1
	Min	**Max**	**Factory setting**
	-	-	-

Description: Displays the unique code number of the power unit.

Note: r0200 = p0201: No power unit found
For parallel circuit configurations, the parameter index is assigned to a power unit.

p0201[0...n] Power unit code number / PU code no

B_INF	**Can be changed:** C2(2)	**Calculated:** -	**Access level:** 3
	Data type: Unsigned16	**Dynamic index:** PDS, p0120	**Func. diagram:** -
	P-Group: Converter	**Units group:** -	**Unit selection:** -
	Not for motor type: -	**Scaling:** -	**Expert list:** 1
	Min	**Max**	**Factory setting**
	0	65535	0

Description: Sets the actual code number from r0200 to acknowledge the power unit being used.
When commissioned for the first time, the code number is automatically transferred from r0200 into p0201.

Dependency: Refer to: F07815

Note: The parameter is used to identify when the drive is being commissioned for the first time.
The power unit commissioning can only be exited (p0201 = r0200), if the actual and acknowledged code numbers are identical (p0010 = 2).
For parallel circuit configurations, the parameter index is assigned to a power unit.

© Siemens AG 2012 All Rights Reserved

p0201[0...n] Power unit code number / PU code no

VECTOR_G	**Can be changed:** C2(2)	**Calculated:** -	**Access level:** 3
	Data type: Unsigned16	**Dynamic index:** PDS, p0120	**Func. diagram:** -
	P-Group: Converter	**Units group:** -	**Unit selection:** -
	Not for motor type: -	**Scaling:** -	**Expert list:** 1
	Min	**Max**	**Factory setting**
	0	65535	0

Description: Sets the actual code number from r0200 to acknowledge the power unit being used.

When commissioned for the first time, the code number is automatically transferred from r0200 into p0201.

Dependency: Refer to: F07815

Notice: When p0201 = 10000, the rated power unit data is reloaded and dependent parameters are set (e.g. p0205, p0210, p0230, p0857, p1800). p0201 is then automatically assigned the value of r0200 if the code number of the power unit could be read. A warm start must be performed after this procedure (automatically if necessary).

Note: The parameter is used to identify when the drive is being commissioned for the first time.

The power unit commissioning can only be exited (p0201 = r0200), if the actual and acknowledged code numbers are identical (p0010 = 2). However, if the comparator in p9906 or p9908 is at 2 (low) or 3 (minimum), the power unit commissioning is automatically set to p0201 = r0200 upon exiting.

When the code number is changed, the connection voltage (p0210) is checked and, if necessary, adjusted.

For parallel circuit configurations, the parameter index is assigned to a power unit.

r0203[0...n] Actual power unit type / PU actual type

B_INF, VECTOR_G	**Can be changed:** -	**Calculated:** -	**Access level:** 3
	Data type: Integer16	**Dynamic index:** PDS, p0120	**Func. diagram:** -
	P-Group: Converter	**Units group:** -	**Unit selection:** -
	Not for motor type: -	**Scaling:** -	**Expert list:** 1
	Min	**Max**	**Factory setting**
	2	400	-

Description: Displays the type of power unit found.

Value:

2: MICROMASTER 440
3: MICROMASTER 411
4: MICROMASTER 410
5: MICROMASTER 436
6: MICROMASTER 440 PX
7: MICROMASTER 430
100: SINAMICS S
101: SINAMICS S (value)
102: SINAMICS S (combi)
103: SINAMICS S120M (distributed)
112: PM220 (SINAMICS G120)
113: PM230 (SINAMICS G120)
114: PM240 (SINAMICS G120)
115: PM250 (SINAMICS G120 / S120)
116: PM260 (SINAMICS G120)
118: SINAMICS G120 Px
120: PM340 (SINAMICS S120)
130: PM250D (SINAMICS G120D)
133: SINAMICS G120C
150: SINAMICS G
151: PM330 (SINAMICS G120)
200: SINAMICS GM
250: SINAMICS SM
260: SINAMICS MC
300: SINAMICS GL
350: SINAMICS SL
400: SINAMICS DCM

Note: For parallel circuit configurations, the parameter index is assigned to a power unit.

© Siemens AG 2012 All Rights Reserved

r0203[0...15] Firmware package name / FW pkg name

CU_G130_DP, CU_G130_PN, CU_G150_DP, CU_G150_PN

Can be changed: -	**Calculated:** -	**Access level:** 4
Data type: Unsigned8	**Dynamic index:** -	**Func. diagram:** -
P-Group: -	**Units group:** -	**Unit selection:** -
Not for motor type: -	**Scaling:** -	**Expert list:** 1
Min	**Max**	**Factory setting**
-	-	-

Description: Displays the name of the firmware package on the memory card/device memory.
r0203[0]: Name character 1
...
r0203[15]: Name character 16
For the commissioning software, the ASCII characters are displayed uncoded.

Notice: An ASCII table (excerpt) can be found, for example, in the appendix to the List Manual.

r0204[0...n] Power unit hardware properties / PU HW property

B_INF

Can be changed: -	**Calculated:** -	**Access level:** 3
Data type: Unsigned32	**Dynamic index:** PDS, p0120	**Func. diagram:** -
P-Group: Converter	**Units group:** -	**Unit selection:** -
Not for motor type: -	**Scaling:** -	**Expert list:** 1
Min	**Max**	**Factory setting**
-	-	-

Description: Displays the properties supported by the power unit hardware.

Bit field:

Bit	Signal name	1 signal	0 signal	FP
00	Device type	DC/AC device	AC/DC device	-
01	RFI filter available	Yes	No	-
02	Active Line Module available	Yes	No	-
03	Smart Line Module available	Yes	No	-
04	Basic Line Module available with thyristor bridge	Yes	No	-
05	Basic Line Module available with diode bridge	Yes	No	-
06	Liquid cooling with cooling unit (chassis PU)	Yes	No	-
07	F3E regenerative feedback into the line supply	Yes	No	-
08	Internal Braking Module	Yes	No	-
09	Different cooling type supported	Yes	No	-
12	Safe Brake Control (SBC) supported	No	Yes	-
13	Safety Integrated supported	Yes	No	-
14	Internal LC output filter	Yes	No	-

Note: For parallel circuit configurations, the parameter index is assigned to a power unit.

r0204[0...n] Power unit hardware properties / PU HW property

VECTOR_G

Can be changed: -	**Calculated:** -	**Access level:** 3
Data type: Unsigned32	**Dynamic index:** PDS, p0120	**Func. diagram:** -
P-Group: Converter	**Units group:** -	**Unit selection:** -
Not for motor type: -	**Scaling:** -	**Expert list:** 1
Min	**Max**	**Factory setting**
-	-	-

Description: Displays the properties supported by the power unit hardware.

Bit field:

Bit	Signal name	1 signal	0 signal	FP
00	Device type	DC/AC device	AC/AC device	-
01	RFI filter available	Yes	No	-
02	Active Line Module available	Yes	No	-
03	Smart Line Module available	Yes	No	-

© Siemens AG 2012 All Rights Reserved

04	Basic Line Module available with thyristor bridge	Yes	No	-
05	Basic Line Module available with diode bridge	Yes	No	-
06	Liquid cooling with cooling unit (chassis PU)	Yes	No	-
07	F3E regenerative feedback into the line supply	Yes	No	-
08	Internal Braking Module	Yes	No	-
09	Different cooling type supported	Yes	No	-
12	Safe Brake Control (SBC) supported	No	Yes	-
13	Safety Integrated supported	Yes	No	-
14	Internal LC output filter	Yes	No	-

Note: For parallel circuit configurations, the parameter index is assigned to a power unit.

p0205 Power unit application / PU application

VECTOR_G

Can be changed: C2(1, 2)	**Calculated:** -	**Access level:** 2
Data type: Integer16	**Dynamic index:** -	**Func. diagram:** -
P-Group: Converter	**Units group:** -	**Unit selection:** -
Not for motor type: -	**Scaling:** -	**Expert list:** 1
Min	**Max**	**Factory setting**
0	7	6

Description: Overloading the load duty cycles applies under the prerequisite that before and after the overload, the drive converter is operated with its base load current - in this case, a load duty cycle of 300 s is used as basis.

For booksize drive units, the following applies:

Only the setting p0205 = 0 can be selected. In this particular case, the base load current has a load duty cycle of 150 % for 60 s and 176 % for 30 s.

For chassis units, the following applies:

The base load current for a low overload condition is based on a load duty cycle 110 % for 60 s and 150 % for 10 s.

The base load current for a high overload condition is based on a load duty cycle 150 % for 60 s and 160 % for 10 s.

Value:
0: Load duty cycle with high overload for vector drives
1: Load duty cycle with low overload for vector drives
6: S1 duty cycle for servo drives (feed drive)
7: S6 duty cycle for servo drives (spindle drive)

Note: When the parameter is changed, all of the motor parameters and the control mode are pre-assigned according to the selected application.

The parameter has no influence when calculating the thermal overload.

p0205 can only be changed to the settings that are saved in the power unit EEPROM.

The parameter value is not reset when the factory setting is restored (see p0010 = 30, p0970).

r0206[0...4] Rated power unit power / PU P_rated

B_INF, VECTOR_G

Can be changed: -	**Calculated:** -	**Access level:** 2
Data type: FloatingPoint32	**Dynamic index:** -	**Func. diagram:** -
P-Group: Converter	**Units group:** 14_6	**Unit selection:** p0100
Not for motor type: -	**Scaling:** -	**Expert list:** 1
Min	**Max**	**Factory setting**
- [kW]	- [kW]	- [kW]

Description: Displays the rated power unit power for various load duty cycles.

Index:
[0] = Rated value
[1] = Load duty cycle with low overload
[2] = Load duty cycle with high overload
[3] = S1 cont duty cyc
[4] = S6 load duty cycle

Dependency: IECdrives (p0100 = 0): Units kW

NEMA drives (p0100 = 1): Units hp

Refer to: p0100, p0205

© Siemens AG 2012 All Rights Reserved

r0207[0...4] Rated power unit current / PU PI_rated

B_INF, VECTOR_G	**Can be changed:** -	**Calculated:** -	**Access level:** 2
	Data type: FloatingPoint32	**Dynamic index:** -	**Func. diagram:** 8014
	P-Group: Converter	**Units group:** -	**Unit selection:** -
	Not for motor type: -	**Scaling:** -	**Expert list:** 1
	Min - [Arms]	**Max** - [Arms]	**Factory setting** - [Arms]

Description: Displays the rated power unit power for various load duty cycles.

Index:
[0] = Rated value
[1] = Load duty cycle with low overload
[2] = Load duty cycle with high overload
[3] = S1 cont duty cyc
[4] = S6 load duty cycle

Dependency: Refer to: p0205

r0208 Rated power unit line supply voltage / PU U_rated

B_INF, VECTOR_G	**Can be changed:** -	**Calculated:** -	**Access level:** 2
	Data type: FloatingPoint32	**Dynamic index:** -	**Func. diagram:** -
	P-Group: Converter	**Units group:** -	**Unit selection:** -
	Not for motor type: -	**Scaling:** -	**Expert list:** 1
	Min - [Vrms]	**Max** - [Vrms]	**Factory setting** - [Vrms]

Description: Displays the rated line supply voltage of the power unit.
r0208 = 400 : 380 - 480 V +/-10 %
r0208 = 500 : 500 - 600 V +/-10 %
r0208 = 690 : 660 - 690 V +/-10 %
For the Basic Line Module (BLM) the following applies:
r0208 = 690 : 500 - 690 V +/-10 %

r0209[0...4] Power unit, maximum current / PU I_max

B_INF, VECTOR_G	**Can be changed:** -	**Calculated:** -	**Access level:** 2
	Data type: FloatingPoint32	**Dynamic index:** -	**Func. diagram:** 8750, 8850, 8950
	P-Group: Converter	**Units group:** -	**Unit selection:** -
	Not for motor type: -	**Scaling:** -	**Expert list:** 1
	Min - [Arms]	**Max** - [Arms]	**Factory setting** - [Arms]

Description: Displays the maximum output current of the power unit.

Index:
[0] = Catalog
[1] = Load duty cycle with low overload
[2] = Load duty cycle with high overload
[3] = S1 load duty cycle
[4] = S6 load duty cycle

Dependency: Refer to: p0205

p0210 Drive unit line supply voltage / V_connect

B_INF	**Can be changed:** C2(1)	**Calculated:** -	**Access level:** 1
	Data type: FloatingPoint32	**Dynamic index:** -	**Func. diagram:** 8760
	P-Group: Converter	**Units group:** -	**Unit selection:** -
	Not for motor type: -	**Scaling:** -	**Expert list:** 1
	Min 70 [Vrms]	**Max** 1000 [Vrms]	**Factory setting** 400 [Vrms]

Description: Sets the drive unit supply voltage (3-ph. AC).

© Siemens AG 2012 All Rights Reserved

The value corresponds to the rms value of the phase-to-phase rated line supply voltage.

Dependency: The parameter can be reduced to p0210 = 70 V if p0212.0 is set.

Caution: If the line supply voltage is higher than the entered value, the Vdc controller may be automatically de-activated in some cases to prevent the motor from accelerating. In this case, an appropriate alarm is output.

Notice: When connected to 3-ph. 230 V AC (only booksize units) the following must be observed:

- the undervoltage and overvoltage limits change (r0296, r0297).
- when using the internal braking chopper of Basic Line Modules (20 or 40 kW) the threshold when the braking chopper becomes active is reduced to 385 V. When using an external braking chopper, it must be ensured that a suitable activation threshold is used.
- all of the components connected to this DC link must also be adapted to the low line supply voltage. It is especially important that the rated DC voltage of all of the drives connected to this DC link is set with p0210 (e.g. p0210(SERVO) = 1.35 x p0210(B_INF) = 310 V).
- it is not possible to use a Control Supply Module (CSM) to generate a 24 V supply from the DC link, as the minimum continuous DC link voltage should not be below 430 V.

Note: The supply voltage range depends on the voltage class of the power unit.

400 V chassis units: 380 V <= p0210 <= 480 V

690 V chassis units: 500 V <= p0210 <= 690 V

400 V booksize units can also be connected to 3-ph. 230 V AC:

400 V booksize units: 180 V <= p0210 <= 480 V

A reduced supply voltage up to 70 V is possible if p0212.0 = 1 has been set.

p0210 Drive unit line supply voltage / V_connect

VECTOR_G	**Can be changed:** C2(2), T	**Calculated:** -	**Access level:** 3
	Data type: Unsigned16	**Dynamic index:** -	**Func. diagram:** -
	P-Group: Converter	**Units group:** -	**Unit selection:** -
	Not for motor type: -	**Scaling:** -	**Expert list:** 1
	Min	**Max**	**Factory setting**
	1 [V]	63000 [V]	600 [V]

Description: Sets the drive unit supply voltage.

AC/AC unit: The rms value of the phase-to-phase line supply voltage should be entered.

DC/AC unit: The rated DC voltage of the connection busbar should be entered.

Dependency: Set p1254, p1294 (automatic detection of the Vdc switch-on levels) = 0.

The switch-in thresholds of the Vdc_max controller are then directly determined using p0210.

The parameter can be reduced to p0210 = 100 V if p0212.0 = 1 has been set.

Refer to: p0212

Caution: If the line supply voltage is higher than the entered value, the Vdc controller may be automatically de-activated in some cases to prevent the motor from accelerating. In this case, an appropriate alarm is output.

Note: Setting ranges for p0210 as a function of the rated power unit voltage:

U_rated = 400 V:

- p0210 = 380 ... 480 V (AC/AC), 510 ... 720 V (DC/AC)

U_rated = 500 V:

- p0210 = 500 ... 600 V (AC/AC), 675 ... 900 V (DC/AC)

U_rated = 660 ... 690 V:

- p0210 = 660 ... 690 V (AC/AC), 890 ... 1035 V (DC/AC)

U_rated = 500 ... 690 V:

- p0210 = 500 ... 690 V (AC/AC), 675 ... 1035 V (DC/AC)

The pre-charging switch-in threshold for the DC link voltage (Vdc) is calculated from p0210:

Vdc_pre = p0210 * 0.82 * 1.35 (AC/AC)

Vdc_pre = p0210 * 0.82 (DC/AC)

The undervoltage thresholds for the DC link voltage (Vdc) are calculated from p0210 as a function of the rated power unit voltage:

U_rated = 400 V:

- U_min = p0210 * 0.78 (AC/AC) > 330 V, p0210 * 0.60 (DC/AC) > 380 V

© Siemens AG 2012 All Rights Reserved

U_rated = 500 V:
- U_min = p0210 * 0.76 (AC/AC) > 410 V
U_rated = 660 ... 690 V:
- U_min = p0210 * 0.82 (AC/AC) > 565 V, p0210 * 0.63 (DC/AC) > 650 V
U_rated = 500 ... 690 V:
- U_min = p0210 * 0.82 (AC/AC) > 420 V, p0210 * 0.63 (DC/AC) > 480 V

p0212 Power unit configuration / PU config

B_INF

Can be changed: C2(2)	**Calculated:** -	**Access level:** 3
Data type: Unsigned16	**Dynamic index:** -	**Func. diagram:** -
P-Group: Converter	**Units group:** -	**Unit selection:** -
Not for motor type: -	**Scaling:** -	**Expert list:** 1
Min	**Max**	**Factory setting**
-	-	0000 bin

Description: Sets the power unit configuration.

Bit field:

Bit	Signal name	1 signal	0 signal	FP
00	Drive unit line supply voltage reduced	Yes	No	-
02	Supply voltage tolerance range extended	Yes	No	-

Dependency: Re bit 00:
Reduced supply voltages are only possible on booksize power units.
Bit 0 = 1 can only be set if r0192.22 = 1.
Refer to: r0192, p0210

Caution: Re bit 00:
Working with reduced input voltages de-activates undervoltage detection.
Re bit 03:
If the automatic setting of the Vdc max limit is deactivated, then all of the components connected to the DC link must be suitable for the maximum DC link voltage of the power unit (e.g. 820 V for 400 V units).

Note: Re bit 00 = 0:
It is not possible to reduce the supply voltage in p0210.
Re bit 00 = 1 (only for B_INF):
With this setting the supply voltage in p0210 can be reduced to 70 V. Bit 0 = 1 can only be set for booksize power units with a rated power of up to 40 kW.

p0212 Power unit configuration / PU config

VECTOR_G

Can be changed: C2(2)	**Calculated:** -	**Access level:** 3
Data type: Unsigned16	**Dynamic index:** -	**Func. diagram:** -
P-Group: Converter	**Units group:** -	**Unit selection:** -
Not for motor type: -	**Scaling:** -	**Expert list:** 1
Min	**Max**	**Factory setting**
-	-	0000 bin

Description: Sets the power unit configuration.

Bit field:

Bit	Signal name	1 signal	0 signal	FP
00	Drive unit line supply voltage reduced	Yes	No	-
01	External pre-charging present	Yes	No	-
03	Automatically adapt Vdc_max limit	No	Yes	-

Dependency: Re bit 00:
Reduced supply voltages are only possible for booksize and chassis power units (DC/AC).
Bit 0 = 1 can only be set if r0192.22 = 1.
Re bit 01 = 1:
The external pre-charging setting only affects the DC/AC power units.
Re bit 03 = 1:
The automatic adaptation (reduction) of the Vdc max limit is deactivated (only for chassis power units). Bit 3 only has an effect, if bit 0 is simultaneously set.
Refer to: r0192, p0210

© Siemens AG 2012 All Rights Reserved

Caution:

Re bit 00:
Working with reduced input voltages de-activates undervoltage detection.
Re bit 03:
If the automatic setting of the Vdc max limit is deactivated, then all of the components connected to the DC link must be suitable for the maximum DC link voltage of the power unit (e.g. 820 V for 400 V units).

Note:

Re bit 00 = 0:
It is not possible to reduce the supply voltage in p0210.
Re bit 00 = 1:
With this setting the supply voltage in p0210 can be reduced to 100 V.
Booksize PU: only for operating mode p1300 = 19
Chassis PU: only for operating mode p1300 > 19 and closed-loop DC voltage control
Re bit 01 = 0:
There is no external pre-charging of the DC/AC Motor Modules. The pre-charging monitoring is bypassed.
Re bit 01 = 1:
There is external pre-charging of the DC/AC Motor Modules. The pre-charging monitoring is calculated.
Re bit 03 = 0:
The DC link voltage limit is calculated from p0210.
Re bit 03 = 1:
The DC link voltage limit is set to the maximum value of the power unit.

p0230 Drive filter type, motor side / Drv filt type mot

VECTOR_G

Can be changed: C2(1, 2)	**Calculated:** -	**Access level:** 1
Data type: Integer16	**Dynamic index:** -	**Func. diagram:** -
P-Group: Converter	**Units group:** -	**Unit selection:** -
Not for motor type: -	**Scaling:** -	**Expert list:** 1
Min	**Max**	**Factory setting**
0	4	0

Description: Sets the type of the filter at the motor side.

Value:

0: No filter
1: Motor reactor
2: dv/dt filter
3: Sine-wave filter, Siemens
4: Sine-wave filter, third-party

Dependency: The following parameters are influenced using p0230:

p0230 = 1:
--> p0233 (power unit, motor reactor) = filter inductance
p0230 = 3:
--> p0233 (power unit, motor reactor) = filter inductance
--> p0234 (power unit sine-wave filter capacitance) = filter capacitance
--> p0290 (power unit overload response) = inhibit pulse frequency reduction
--> p1082 (maximum speed) = Fmax filter / pole pair number
--> p1800 (pulse frequency) >= nominal pulse frequency of the filter
--> p1802 (modulator modes) = space vector modulation without overcontrol
--> p1811 (modulator configuration) = wobbulation amplitude
--> p1909 (motor data identification, control word) = only Rs measurement
p0230 = 4:
--> p0290 (power unit overload response) = inhibit pulse frequency reduction
--> p1802 (modulator modes) = space vector modulation without overcontrol
--> p1811 (modulator configuration) = wobbulation amplitude
--> p1909 (motor data identification, control word) = only Rs measurement

© Siemens AG 2012 All Rights Reserved

The user must set the following parameters according to the data sheet of the sine-wave filter and also the user must check whether they are permitted.

--> p0233 (power unit, motor reactor) = filter inductance

--> p0234 (power unit sine-wave filter capacitance) = filter capacitance

--> p1082 (maximum speed) = Fmax filter / pole pair number

--> p1800 (pulse frequency) >= nominal pulse frequency of the filter

Refer to: p0233, p0234, p0290, p1082, p1800, p1802

Note: if a filter type cannot be selected, then this filter type is not permitted for the Motor Module.

p0230 = 1:

The output frequency of booksize power units with output reactors is restricted to 120 Hz, for blocksize and chassis power units, to 150Hz. The maximum pulse frequency for booksize and blocksize power units is 4 kHz, for chassis power units, twice the rated pulse frequency (2.5 kHz or 4 kHz).

p0230 = 2:

Chassis power units with dv/dt filter, depending on the rated pulse frequency, may be operated with a maximum pulse frequency of p1800 = 2.5 kHz or 4 kHz. The output frequency is limited to 150 Hz.

p0230 = 3:

Sine-wave filters with a rated pulse frequency of 1.25 or 2.5 kHz should only be operated with a current controller sampling rate p0115[0] = 400 µs, sine-wave filters with a rated pulse frequency of 2 or 4 kHz with p0115[0] = 250 µs.

The sine-wave filter cannot be selected if the current controller sampling rate has not been appropriately set.

Chassis power units with sine-wave filter are limited to output frequencies of 115 Hz or 150 Hz.

p0233 Power unit motor reactor / PU mot reactor

VECTOR_G

Can be changed: C2(2), U, T	**Calculated:** -	**Access level:** 2
Data type: FloatingPoint32	**Dynamic index:** -	**Func. diagram:** -
P-Group: Converter	**Units group:** -	**Unit selection:** -
Not for motor type: -	**Scaling:** -	**Expert list:** 1
Min	**Max**	**Factory setting**
0.000 [mH]	1000.000 [mH]	0.000 [mH]

Description: Enter the inductance of a filter connected at the power unit output.

Dependency: This parameter is automatically pre-set when you select a filter via p0230 if a SIEMENS filter is defined for the power unit.

Refer to: p0230

Note: When exiting the quick commissioning using p3900 = 1, the parameter value is set to the value of the defined SIEMENS filter or to zero. For this reason, the parameter value of a third-party filter only has to be entered outside the commissioning phase (p0010 = 0) and then the controller calculation (p0340 = 3) is carried out.

p0234 Power unit sine-wave filter capacitance / PU sine filter C

VECTOR_G

Can be changed: C2(2), U, T	**Calculated:** -	**Access level:** 2
Data type: FloatingPoint32	**Dynamic index:** -	**Func. diagram:** -
P-Group: Converter	**Units group:** -	**Unit selection:** -
Not for motor type: -	**Scaling:** -	**Expert list:** 1
Min	**Max**	**Factory setting**
0.000 [µF]	1000.000 [µF]	0.000 [µF]

Description: Enters the capacitance of a sine-wave filter connected at the power unit output.

Dependency: This parameter is automatically pre-set when you select a filter via p0230 if a SIEMENS filter is defined for the power unit.

Refer to: p0230

Note: The parameter value includes the sum of all of the capacitances of a phase connected in series (phase - ground).

When exiting the quick commissioning using p3900 = 1, the parameter value is set to the value of the defined SIEMENS filter or to zero. For this reason, the parameter value of a third-party filter only has to be entered outside the commissioning phase (p0010 = 0).

© Siemens AG 2012 All Rights Reserved

p0235 Motor reactor in series number / L_mot in SeriesQty

VECTOR_G	**Can be changed:** C2(1, 2)	**Calculated:** -	**Access level:** 1
	Data type: Unsigned8	**Dynamic index:** -	**Func. diagram:** -
	P-Group: Converter	**Units group:** -	**Unit selection:** -
	Not for motor type: -	**Scaling:** -	**Expert list:** 1
	Min	**Max**	**Factory setting**
	1	3	1

Description: Sets the number of reactors connected in series at the power unit output.

Dependency: Refer to: p0230

Caution: If the number of motor reactors connected in series does not correspond to this parameter value, then this can result in an unfavorable control behavior.

Note: The parameter cannot be changed for chassis units and for p0230 = 1.

r0238 Internal power unit resistance / PU R internal

VECTOR_G	**Can be changed:** -	**Calculated:** -	**Access level:** 3
	Data type: FloatingPoint32	**Dynamic index:** -	**Func. diagram:** -
	P-Group: Converter	**Units group:** -	**Unit selection:** -
	Not for motor type: -	**Scaling:** -	**Expert list:** 1
	Min	**Max**	**Factory setting**
	- [ohm]	- [ohm]	- [ohm]

Description: Displays the internal resistance of the power unit (IGBT and line resistance).

Note: For a parallel circuit, the value corresponds to the resistance of a power unit.

p0249 Power unit cooling type / PU cool type

VECTOR_G	**Can be changed:** C2(1, 2)	**Calculated:** -	**Access level:** 4
	Data type: Integer16	**Dynamic index:** -	**Func. diagram:** -
	P-Group: Converter	**Units group:** -	**Unit selection:** -
	Not for motor type: -	**Scaling:** -	**Expert list:** 1
	Min	**Max**	**Factory setting**
	0	1	0

Description: Sets the cooling type for booksize compact power units.

This therefore defines whether for these power units, the internal air cooling is shut down and instead, the "Cold-Plate" cooling type is used.

Value:
0: Air cooling int
1: Cold-Plate

Note: For booksize compact power units, there is a 4 at the 5th position in the Order No.

The parameter is irrelevant for all other power unit types.

p0251[0...n] Operating hours counter power unit fan / PU fan t_oper

B_INF, VECTOR_G	**Can be changed:** T	**Calculated:** -	**Access level:** 3
	Data type: Unsigned32	**Dynamic index:** PDS, p0120	**Func. diagram:** -
	P-Group: Modulation	**Units group:** -	**Unit selection:** -
	Not for motor type: -	**Scaling:** -	**Expert list:** 1
	Min	**Max**	**Factory setting**
	0 [h]	4294967295 [h]	0 [h]

Description: Displays the power unit fan operating hours.

The number of hours operated can only be reset to 0 in this parameter (e.g. after a fan has been replaced).

Dependency: Refer to: p0252

© Siemens AG 2012 All Rights Reserved

p0252 Maximum operating time power unit fan / PU fan t_oper max

B_INF, VECTOR_G	**Can be changed:** T	**Calculated:** -	**Access level:** 4
	Data type: Unsigned32	**Dynamic index:** -	**Func. diagram:** -
	P-Group: Modulation	**Units group:** -	**Unit selection:** -
	Not for motor type: -	**Scaling:** -	**Expert list:** 1
	Min	**Max**	**Factory setting**
	0 [h]	100000 [h]	40000 [h]

Description: Sets the maximum operating time of the power unit fan.
The pre-alarm (warning) is output 500 hours before this set value.
The monitoring is de-activated with p0252 = 0.

Dependency: Refer to: p0251

Note: For chassis units, the maximum operating time in the power unit parameter is set to 50000 via the factory setting.

p0255[0...1] Power unit contactor monitoring time / PU cont t_monit

B_INF, VECTOR_G	**Can be changed:** T	**Calculated:** -	**Access level:** 3
	Data type: FloatingPoint32	**Dynamic index:** -	**Func. diagram:** -
	P-Group: Modulation	**Units group:** -	**Unit selection:** -
	Not for motor type: -	**Scaling:** -	**Expert list:** 1
	Min	**Max**	**Factory setting**
	0 [ms]	6500 [ms]	0 [ms]

Description: Sets the monitoring time for internal monitoring of the contactor feedback contacts.

Index: [0] = Pre-charge contactor
[1] = Bypass contactor

Dependency: Refer to: F30060, F30061

Note: This parameter is only effective for chassis power units with 3 AC line connection and line contactors.
A value of 0 de-activates the associated line contactor monitoring.

p0260 Cooling unit, starting time 1 / RKA start time 1

B_INF (Cool_unit), VECTOR_G (Cool_unit)	**Can be changed:** U, T	**Calculated:** -	**Access level:** 3
	Data type: FloatingPoint32	**Dynamic index:** -	**Func. diagram:** 9795
	P-Group: Converter	**Units group:** -	**Unit selection:** -
	Not for motor type: -	**Scaling:** -	**Expert list:** 1
	Min	**Max**	**Factory setting**
	0.0 [s]	60.0 [s]	5.0 [s]

Description: Sets starting time 1 to monitor the cooling unit after power-on command.
After powering up, the following signals must be present within starting time 1:
- "RKA powered up"
- "RKA liquid flow OK"
When a fault occurs, an appropriate message is output.

Dependency: Refer to: F49152, F49153

Note: RKA: Cooling unit

p0261 Cooling unit, starting time 2 / RKA start time 2

B_INF (Cool_unit), VECTOR_G (Cool_unit)	**Can be changed:** U, T	**Calculated:** -	**Access level:** 3
	Data type: FloatingPoint32	**Dynamic index:** -	**Func. diagram:** 9795
	P-Group: Converter	**Units group:** -	**Unit selection:** -
	Not for motor type: -	**Scaling:** -	**Expert list:** 1
	Min	**Max**	**Factory setting**
	0.0 [s]	1200.0 [s]	180.0 [s]

Description: Sets starting time 2 to monitor the cooling unit after power-on command.

© Siemens AG 2012 All Rights Reserved

After powering up, the following signals must be present within starting time 2:
- "RKA conductivity, no fault"
- "RKA conductivity, no alarm"

When a fault occurs, an appropriate message is output.

Dependency: Refer to: p0266
Refer to: F49151, A49171

p0262 Cooling unit, fault conductivity delay time / RKA cond t_del

B_INF (Cool_unit), VECTOR_G (Cool_unit)

Can be changed: U, T	**Calculated:** -	**Access level:** 3
Data type: FloatingPoint32	**Dynamic index:** -	**Func. diagram:** 9795
P-Group: Converter	**Units group:** -	**Unit selection:** -
Not for motor type: -	**Scaling:** -	**Expert list:** 1
Min	**Max**	**Factory setting**
0.0 [s]	30.0 [s]	0.0 [s]

Description: Sets the delay time for the fault "RKA: Conductive limit value exceeded" during operation.
The fault is only output if, during operation, the conductivity exceeds the permissible fault value and the value remains for a longer time than is set in this parameter.

Dependency: Refer to: F49151

p0263 Cooling unit fault liquid flow, delay time / RKA flow t_del

B_INF (Cool_unit), VECTOR_G (Cool_unit)

Can be changed: U, T	**Calculated:** -	**Access level:** 3
Data type: FloatingPoint32	**Dynamic index:** -	**Func. diagram:** 9795
P-Group: Converter	**Units group:** -	**Unit selection:** -
Not for motor type: -	**Scaling:** -	**Expert list:** 1
Min	**Max**	**Factory setting**
0.0 [s]	20.0 [s]	3.0 [s]

Description: Sets the delay time for the fault "RKA: Liquid flow too low".
The fault is only output if the cause is present for a time longer than is set in this parameter.

Dependency: Refer to: F49153

p0264 Cooling unit, run-on time / RKA run-on time

B_INF (Cool_unit), VECTOR_G (Cool_unit)

Can be changed: U, T	**Calculated:** -	**Access level:** 3
Data type: FloatingPoint32	**Dynamic index:** -	**Func. diagram:** 9795
P-Group: Converter	**Units group:** -	**Unit selection:** -
Not for motor type: -	**Scaling:** -	**Expert list:** 1
Min	**Max**	**Factory setting**
0.0 [s]	180.0 [s]	30.0 [s]

Description: Sets the run-up time of the cooling unit after a power-off command.

r0265.0...3 BO: Cooling unit, control word / RKA CTW

B_INF (Cool_unit), VECTOR_G (Cool_unit)

Can be changed: -	**Calculated:** -	**Access level:** 3
Data type: Unsigned8	**Dynamic index:** -	**Func. diagram:** -
P-Group: Commands	**Units group:** -	**Unit selection:** -
Not for motor type: -	**Scaling:** -	**Expert list:** 1
Min	**Max**	**Factory setting**
-	-	-

Description: Displays the control word for the cooling unit.

Bit field:

Bit	Signal name	1 signal	0 signal	FP
00	Power up cooling unit	Activating	De-activating	-
01	Message converter off	OFF	ON	-
02	Acknowledge faults	Acknowledgement	No acknowledgement	-
03	Leakage sensing OK	No leaked liquid	Leaked liquid	-

© Siemens AG 2012 All Rights Reserved

p0266[0...7] BI: Cooling unit, feedback signals, signal source / RKA fdbk S_src

B_INF (Cool_unit), VECTOR_G (Cool_unit)

Can be changed: U, T	**Calculated:** -	**Access level:** 3
Data type: Unsigned32 / Binary	**Dynamic index:** -	**Func. diagram:** -
P-Group: Communications	**Units group:** -	**Unit selection:** -
Not for motor type: -	**Scaling:** -	**Expert list:** 1
Min	**Max**	**Factory setting**
-	-	1

Description: Sets the signal sources for the feedback signals from the cooling unit.

Index:
[0] = Cooling unit powered up
[1] = Cooling unit ready to be powered up
[2] = Cooling unit, no alarm present
[3] = Cooling unit, no fault present
[4] = Cooling unit, no leaked liquid
[5] = Cooling unit, liquid flow OK
[6] = Cooling unit, conductivity < fault threshold
[7] = Cooling unit, conductivity < alarm threshold

r0267.0...7 BO: Cooling unit status word / RKA ZSW

B_INF (Cool_unit), VECTOR_G (Cool_unit)

Can be changed: -	**Calculated:** -	**Access level:** 3
Data type: Unsigned16	**Dynamic index:** -	**Func. diagram:** -
P-Group: Commands	**Units group:** -	**Unit selection:** -
Not for motor type: -	**Scaling:** -	**Expert list:** 1
Min	**Max**	**Factory setting**
-	-	-

Description: Displays the status word of the cooling unit.

Bit field:

Bit	Signal name	1 signal	0 signal	FP
00	RKA powered up	Yes	No	-
01	RKA ready to be powered up	Yes	No	-
02	RKA no alarm present	Yes	No	-
03	RKA no fault present	Yes	No	-
04	RKA no leaked fluid	Yes	No	-
05	RKA liquid flow OK	Yes	No	-
06	RKA conductivity, no fault	Yes	No	9974
07	RKA conductivity, no alarm	Yes	No	9974

Dependency: Refer to: p0266

p0278 DC link voltage undervoltage threshold reduction / Vdc U_under red

VECTOR_G

Can be changed: T	**Calculated:** -	**Access level:** 3
Data type: FloatingPoint32	**Dynamic index:** -	**Func. diagram:** -
P-Group: Converter	**Units group:** -	**Unit selection:** -
Not for motor type: -	**Scaling:** -	**Expert list:** 1
Min	**Max**	**Factory setting**
-80 [V]	0 [V]	0 [V]

Description: Sets the absolute value by which the threshold to initiate the undervoltage fault (F30003) is reduced.

Dependency: Refer to: p0210, r0296
Refer to: F30003

Notice: When using a Control Supply Module (CSM) for 24 V supply from the DC link, the minimum continuous DC link voltage may not lie below 430 V. DC link voltages in the range 300 ... 430 V are permissible up to a duration of 1 min.
For chassis power units, this parameter has no significance.

Note: The resulting shutdown threshold can be read in r0296 and is dependent on the selected rated voltage (p0210) and the power unit being used.

© Siemens AG 2012 All Rights Reserved

p0279 DC link voltage offset alarm threshold / Vdc offs A thresh

B_INF

Can be changed: T	**Calculated:** -	**Access level:** 3
Data type: FloatingPoint32	**Dynamic index:** -	**Func. diagram:** 8760, 8864, 8964
P-Group: Converter	**Units group:** -	**Unit selection:** -
Not for motor type: -	**Scaling:** -	**Expert list:** 1
Min	**Max**	**Factory setting**
0 [V]	500 [V]	0 [V]

Description: Sets the voltage threshold to initiate alarm A06810.
The value represents an offset so that the alarm threshold is obtained from the total of r0296 and p0279.

Dependency: Refer to: p0210, r0296
Refer to: A06810

Note: The absolute value of the undervoltage threshold r0296 depends on the selected unit supply voltage (p0210).

p0287[0...1] Ground fault monitoring thresholds / Gnd flt threshold

VECTOR_G

Can be changed: T	**Calculated:** -	**Access level:** 3
Data type: FloatingPoint32	**Dynamic index:** -	**Func. diagram:** -
P-Group: -	**Units group:** -	**Unit selection:** -
Not for motor type: -	**Scaling:** -	**Expert list:** 1
Min	**Max**	**Factory setting**
0.0 [%]	100.0 [%]	[0] 6.0 [%] [1] 16.0 [%]

Description: Sets the shutdown thresholds for the ground fault monitoring.
The setting is made as a percentage of the maximum power unit current (r0209).

Index: [0] = Threshold at which pre-charging starts
[1] = Threshold at which pre-charging stops

Dependency: Refer to: F30021

Note: The parameter only applies to booksize and chassis power units.
De-activating the ground fault monitoring:
- Sequence: --> p0287[1] = 0 --> p0287[0] = 0
- irrespective of the firmware version of the power unit.
Sets the thresholds:
- the prerequisite is at least firmware version 2.2 of the power unit.

r0289 CO: Maximum power unit output current / PU I_outp max

VECTOR_G

Can be changed: -	**Calculated:** -	**Access level:** 3
Data type: FloatingPoint32	**Dynamic index:** -	**Func. diagram:** -
P-Group: Displays, signals	**Units group:** -	**Unit selection:** -
Not for motor type: -	**Scaling:** p2002	**Expert list:** 1
Min	**Max**	**Factory setting**
- [Arms]	- [Arms]	- [Arms]

Description: Displays the actual maximum output current of the power unit taking into account derating factors.

p0290 Power unit overload response / PU overld response

VECTOR_G

Can be changed: T	**Calculated:** -	**Access level:** 3
Data type: Integer16	**Dynamic index:** -	**Func. diagram:** 8014
P-Group: Converter	**Units group:** -	**Unit selection:** -
Not for motor type: -	**Scaling:** -	**Expert list:** 1
Min	**Max**	**Factory setting**
0	3	0

Description: Sets the response to a thermal overload condition of the power unit.

© Siemens AG 2012 All Rights Reserved

The following quantities can result in a response to thermal overload:
- heat sink temperature (r0037 index 0)
- chip temperature (r0037 index 1)
- power unit overload I2T (r0036)

Possible measures to avoid thermal overload:
- reduce the output current limit r0289 and r0067 (for closed-loop speed/velocity or torque/force control) or the output frequency (for U/f control) indirectly via the output current limit and the intervention of the current limiting controller).
- reduce the pulse frequency (only for vector control).

A reduction, if parameterized, is always realized after an appropriate alarm is output.

Value:
0: Reduce output current or output frequency
1: No reduction, shutdown when overload threshold is reached
2: Reduce I_output or f_output and f_pulse (not using I2t)
3: Reduce the pulse frequency (not using I2t)

Dependency: If a sine-wave filter is parameterized as output filter (p0230 = 3, 4), then only responses can be selected without pulse frequency reduction (p0290 = 0, 1).
If a fault or alarm is present, then r2135.13 or r2135.15 is set.
Refer to: r0036, r0037, p0108, r0108, p0230, r2135
Refer to: A05000, A05001, A07805

Caution: If the thermal overload of the power unit is not sufficiently reduced by the actions taken, the drive is always shut down. This means that the power unit is always protected irrespective of the setting of this parameter.

Note: The setting p0290 = 0, 2 is only practical if the load decreases with decreasing speed (e.g. for applications with variable torque such as for pumps and fans).
Under overload conditions, the current and torque limit are reduced, and therefore the motor is braked and forbidden speed ranges (e.g. minimum speed p1080 and suppression [skip] speeds p1091 ... p1094) can be passed through.
For p0290 = 2, 3, the I2t overload detection of the power unit does not influence the responses.
When the motor data identification routine is selected, p0290 cannot be changed.

r0293 CO: Power unit alarm threshold model temperature / PU A_thr mod_temp

VECTOR_G

Can be changed: -	**Calculated:** -	**Access level:** 3
Data type: FloatingPoint32	**Dynamic index:** -	**Func. diagram:** 8014
P-Group: Converter	**Units group:** 21_1	**Unit selection:** p0505
Not for motor type: -	**Scaling:** p2006	**Expert list:** 1
Min	**Max**	**Factory setting**
- [°C]	- [°C]	- [°C]

Description: Temperature alarm threshold for the difference from the chip and heat sink temperature in the thermal model.

Dependency: Refer to: r0037
Refer to: F30024

Note: The parameter is only relevant for chassis power units.

p0294 Power unit alarm with I2t overload / PU I2t alrm thresh

B_INF

Can be changed: U, T	**Calculated:** -	**Access level:** 3
Data type: FloatingPoint32	**Dynamic index:** -	**Func. diagram:** 8014
P-Group: Converter	**Units group:** -	**Unit selection:** -
Not for motor type: -	**Scaling:** -	**Expert list:** 1
Min	**Max**	**Factory setting**
10.0 [%]	100.0 [%]	95.0 [%]

Description: Sets the alarm threshold for the I2t power unit overload.

Dependency: Refer to: r0036
Refer to: A07805

Note: The parameter is only relevant for booksize units!

© Siemens AG 2012 All Rights Reserved

p0294 Power unit alarm with I2t overload / PU I2t alrm thresh

VECTOR_G

Can be changed: U, T	**Calculated:** -	**Access level:** 3
Data type: FloatingPoint32	**Dynamic index:** -	**Func. diagram:** 8014
P-Group: Converter	**Units group:** -	**Unit selection:** -
Not for motor type: -	**Scaling:** -	**Expert list:** 1
Min	**Max**	**Factory setting**
10.0 [%]	100.0 [%]	95.0 [%]

Description: Sets the alarm threshold for the I2t power unit overload.
Drive:
If this threshold is exceeded, an overload alarm is generated and the system responds as parameterized in p0290.
Infeed:
When the threshold value is exceeded, only an overload alarm is output.

Dependency: Refer to: r0036, p0290
Refer to: A07805

Note: The I2t fault threshold is 100 %. If this value is exceeded, fault F30005 is output.

p0295 Fan run-on time / Fan run-on time

B_INF, VECTOR_G

Can be changed: U, T	**Calculated:** -	**Access level:** 1
Data type: FloatingPoint32	**Dynamic index:** -	**Func. diagram:** -
P-Group: Converter	**Units group:** -	**Unit selection:** -
Not for motor type: -	**Scaling:** -	**Expert list:** 1
Min	**Max**	**Factory setting**
0 [s]	600 [s]	0 [s]

Description: Sets the fan run-on time after the pulses for the power unit have been canceled.

Note: - Under certain circumstances, the fan can continue to run for longer than was set (e.g. as a result of the excessively high heat sink temperature).
- For values less than 1 s, a 1 s run on time for the fan is active.

r0296 DC link voltage undervoltage threshold / Vdc U_lower_thresh

B_INF

Can be changed: -	**Calculated:** -	**Access level:** 2
Data type: Unsigned16	**Dynamic index:** -	**Func. diagram:** 8750, 8760, 8850, 8864, 8950, 8964
P-Group: Converter	**Units group:** -	**Unit selection:** -
Not for motor type: -	**Scaling:** -	**Expert list:** 1
Min	**Max**	**Factory setting**
- [V]	- [V]	- [V]

Description: If the DC link voltage falls below the threshold specified here, the infeed is tripped due to a DC link undervoltage condition.

Dependency: Refer to: F30003

Note: The value depends on the device type and the selected rated voltage p0210.

r0296 DC link voltage undervoltage threshold / Vdc U_lower_thresh

VECTOR_G

Can be changed: -	**Calculated:** -	**Access level:** 2
Data type: Unsigned16	**Dynamic index:** -	**Func. diagram:** -
P-Group: Converter	**Units group:** -	**Unit selection:** -
Not for motor type: -	**Scaling:** -	**Expert list:** 1
Min	**Max**	**Factory setting**
- [V]	- [V]	- [V]

Description: Sets the threshold for detecting a DC link undervoltage.
If the DC link voltage falls below this threshold, the Motor Module is shut down due to a DC link undervoltage condition (F30003).

© Siemens AG 2012 All Rights Reserved

Dependency: Refer to: p0278
Refer to: F30003

Note: The value depends on the device type and the selected rated voltage p0210.
For booksize drive units, the following applies:
The undervoltage threshold can be reduced with p0278.

r0297 DC link voltage overvoltage threshold / Vdc U_upper_thresh

B_INF, VECTOR_G

Can be changed: -	**Calculated:** -	**Access level:** 2
Data type: Unsigned16	**Dynamic index:** -	**Func. diagram:** 8750, 8760, 8850, 8864, 8950, 8964
P-Group: Converter	**Units group:** -	**Unit selection:** -
Not for motor type: -	**Scaling:** -	**Expert list:** 1
Min	**Max**	**Factory setting**
- [V]	- [V]	- [V]

Description: If the DC link voltage exceeds the threshold specified here, the drive unit is tripped due to DC link overvoltage.

Dependency: Refer to: F30002

p0300[0...n] Motor type selection / Mot type sel

VECTOR_G

Can be changed: C2(1, 3)	**Calculated:** -	**Access level:** 1
Data type: Integer16	**Dynamic index:** MDS, p0130	**Func. diagram:** 6310
P-Group: Motor	**Units group:** -	**Unit selection:** -
Not for motor type: -	**Scaling:** -	**Expert list:** 1
Min	**Max**	**Factory setting**
0	10001	0

Description: Selects the motor type or starts to read in the motor parameters for a motor with DRIVE-CLiQ (p0300 = 10000 or 10001, if there is a second data set).
For p0300 < 10000 the following applies:
The first digit of the parameter value always defines the general motor type and corresponds to the third-party motor belonging to a motor list:
1 = Rotating induction motor
2 = Rotating synchronous motor
3 = Linear induction motor (reserved)
4 = Linear synchronous motor
5 = Synchronous motor separately-excited
7 = SIEMOSYN motor
8 = Reluctance motor
The type information must be entered to filter motor-specific parameters and to optimize the operating characteristics and behavior. For example, for synchronous motors, power factor (p0308) is neither used nor displayed (in the BOP/AOP).

Value:
0: No motor
1: Induction motor (rotating)
2: Synchronous motor (rotating, permanent-magnet)
7: SIEMOSYN motor
8: Reluctance motor
10: 1LE1 standard induction motor
11: 1LA1 standard induction motor
12: 1LE2 standard induction motor (NEMA)
13: 1LG6 standard induction motor
15: 1LA5 standard induction motor
16: 1LA6 standard induction motor
17: 1LA7 standard induction motor
18: 1LA8 / 1PQ8 standard induction motor
19: 1LA9 standard induction motor
102: 1PH2 induction motor
104: 1PH4 induction motor
107: 1PH7 induction motor

© Siemens AG 2012 All Rights Reserved

108: 1PH8 induction motor
111: Induction motor (rotary) for OEMs
134: 1PM4 induction motor
136: 1PM6 induction motor
166: 1PL6 induction motor
222: Synchronous motor (rotary) for OEMs
264: 1FW4 synchronous motor
283: 1FW3 synchronous motor
10000: Motor with DRIVE-CLiQ
10001: Motor with DRIVE-CLiQ 2nd data set

Dependency: Motors, selection 206, 236, 237 cannot be operated (also not as motor with DRIVE-CLiQ).

p0300 = 5 cannot be selected with SINAMICS G.

When the motor type is changed, the code number in p0301 may be reset to 0.

p0300 = 12 can only be selected for p0100 = 1 (NEMA).

When selecting a motor type from the 1LA5 and 1LA7 series, parameters p0335, p0626, p0627 and p0628 of the thermal motor model are pre-assigned as a function of p0307 and p0311.

When selecting a 1FW4 motor, if the motor database permits this, when exiting commissioning then p1750 bit 5 is automatically set. This is the reason that after exiting commissioning, all parameters must be saved and a warm restart must be initiated (e.g. p0009=30, p0976=3).

Refer to: p0301

Caution: A permanent-magnet synchronous motor cannot be operated with an SSI encoder without HTL/TTL track.

A separately-excited synchronous motor can only be operated with an SSI encoder if this is used as the second encoder and an HTL/TTL encoder is used as the first encoder.

Caution: If a catalog motor is selected (p0300 >= 100) and an associated motor code number (p0301), then the parameters that are associated with this list cannot be changed (write protection). The write protection is canceled if the motor type p0300 is set to a non-Siemens motor that matches p0301 (e.g. p0300 = 2 for p0301 = 2xxxx). Write protection is automatically canceled when the results of motor data identification are copied to the motor parameters.

The motor type of a catalog motor corresponds to the upper three digits of the code number or the following assignment (if the particular motor type is listed):

Type/code number ranges

102 / 102xx, 112xx, 122xx

104 / 104xx, 114xx, 124xx

107 / 107xx, 117xx, 127xx

108 / 108xx, 118xx, 128xx, 138xx, 148xx, 158xx

134 / 134xx, 144xx, 154xx

136 / 136xx, 146xx, 156xx

166 / 166xx, 176xx, 186xx

264 / 264xx, 274xx, 284xx, 294xx

283 / 283xx, 293xx

Notice: For 1PQ8 motors (p0300 = 18) the fan type p0335 should be set to 5.

Note: With p0300 = 10000, for a motor with DRIVE-CLiQ, the motor parameters are automatically downloaded, with p0300 = 10001, the motor parameters of a second data set (if available).

If a motor type has not been selected (p0300 = 0), then the drive commissioning routine cannot be exited.

A motor type with a value above p0300 >= 100 describes motors for which a motor parameter list exists.

Motor types with a value below p0300 < 100 correspond to the selection of a third-party motor. When appropriately selected, this means that the motor parameters are pre-assigned the settings for a third-party motor.

This also applies for parameters for a motor with DRIVE-CLiQ. In this case p0300 can only be set to p0300 = 10000 or 10001 (read motor parameters) or to the corresponding non-Siemens motor (first digit of the motor code number) in order to be able to cancel the write protection.

© Siemens AG 2012 All Rights Reserved

p0301[0...n] Motor code number selection / Mot code No. sel

VECTOR_G

Can be changed: C2(1, 3)	**Calculated:** -	**Access level:** 1
Data type: Unsigned16	**Dynamic index:** MDS, p0130	**Func. diagram:** -
P-Group: Motor	**Units group:** -	**Unit selection:** -
Not for motor type: FEM	**Scaling:** -	**Expert list:** 1
Min	**Max**	**Factory setting**
0	65535	0

Description: The parameter is used to select a motor from a motor parameter list.

When changing the code number (with the exception to the value 0), all of the motor parameters are pre-assigned from the internally available parameter lists.

Dependency: Code numbers can only be selected for motor types that correspond to the motor type selected in p0300. For 1PH2, 1PH4, 1PH7, 1PM4, 1PM6, 1FT6 motors, code numbers are also possible, whose fourth decimal position is greater by a value of 1 or 2 than the matching motor type in p0300. For 1FE1 motors, the third decimal position can be higher by a value of 1.

Refer to: p0300

Note: The motor code number can only be changed if the matching catalog motor was first selected in p0300.

For a motor with DRIVE-CLiQ, p0301 cannot be changed. In this case, p0301 is automatically written to the code number of the motor parameter read in (r0302) if p0300 is set to 10000.

When selecting a catalog motor (p0300 >= 100), drive commissioning can only be exited if a code number is selected.

r0302[0...n] Motor code number of motor with DRIVE-CLiQ / Motor code Mot DLQ

VECTOR_G

Can be changed: -	**Calculated:** -	**Access level:** 2
Data type: Unsigned16	**Dynamic index:** MDS, p0130	**Func. diagram:** -
P-Group: Motor	**Units group:** -	**Unit selection:** -
Not for motor type: -	**Scaling:** -	**Expert list:** 1
Min	**Max**	**Factory setting**
-	-	-

Description: Displays the motor code number from the saved motor data from a motor with DRIVE-CLiQ.

Note: Drive commissioning can only be exited if the code number that was downloaded (r0302) matches the stored code number (p0301). If the numbers differ, then the motor data set should be re-loaded using p0300 = 10000.

The motor data are always expected from the first encoder that is assigned to the drive data sets (refer to p0187 = encoder 1) data set number.

The value is not updated cyclically but only on specific events (e.g. update DRIVE-CLiQ device).

r0302 = 0: No motor with DRIVE-CLiQ found

r0303[0...n] Motor with DRIVE-CLiQ status word / Motor w DLQ ZSW

VECTOR_G

Can be changed: -	**Calculated:** -	**Access level:** 2
Data type: Unsigned16	**Dynamic index:** MDS, p0130	**Func. diagram:** -
P-Group: Motor	**Units group:** -	**Unit selection:** -
Not for motor type: -	**Scaling:** -	**Expert list:** 1
Min	**Max**	**Factory setting**
-	-	-

Description: Displays the status word of the automatic motor parameter sensing of a motor with DRIVE-CLiQ.

Motor parameter sensing takes place in the following events if the SMI is connected to the Motor Module and the encoder is activated (p0145):

- Warm restart
- downloading projects.
- POWER ON (off/on).
- where p0300 = 10000, 10001.

© Siemens AG 2012 All Rights Reserved

Bit field:

Bit	Signal name	1 signal	0 signal	FP
00	Motor data set selected	MDS1	MDS0	-
01	Motor connection type	Delta	Star	-
02	Windings can be changed	Yes	No	-
03	Windings can be changed number	2	0	-

Dependency: Refer to: p0145, p0300

Note: SMI: SINAMICS Sensor Module Integrated

p0304[0...n] Rated motor voltage / Mot U_rated

VECTOR_G

Can be changed: C2(1, 3) **Calculated:** - **Access level:** 1
Data type: FloatingPoint32 **Dynamic index:** MDS, p0130 **Func. diagram:** 6300, 6724
P-Group: Motor **Units group:** - **Unit selection:** -
Not for motor type: - **Scaling:** - **Expert list:** 1

Min	Max	Factory setting
0 [Vrms]	20000 [Vrms]	0 [Vrms]

Description: Sets the rated motor voltage (rating plate).

Dependency: Refer to: p0349

Caution: When selecting a catalog motor (p0301), this parameter is automatically pre-assigned and is write protected. Information in p0300 should be carefully observed when removing write protection.

Note: When the parameter value is entered the connection type of the motor (star-delta) must be taken into account.

p0305[0...n] Rated motor current / Mot I_rated

VECTOR_G

Can be changed: C2(1, 3) **Calculated:** - **Access level:** 1
Data type: FloatingPoint32 **Dynamic index:** MDS, p0130 **Func. diagram:** 6300
P-Group: Motor **Units group:** - **Unit selection:** -
Not for motor type: - **Scaling:** - **Expert list:** 1

Min	Max	Factory setting
0.00 [Arms]	10000.00 [Arms]	0.00 [Arms]

Description: Sets the rated motor current (rating plate).

Dependency: Refer to: p0349

Caution: When selecting a catalog motor (p0301), this parameter is automatically pre-assigned and is write protected. Information in p0300 should be carefully observed when removing write protection.

Notice: If p0305 is changed during quick commissioning (p0010 = 1), then the maximum current p0640 is pre-assigned accordingly. This is not the case when commissioning the motor (p0010 = 3).

If the rated motor current exceeds twice the maximum drive converter current (r0209), then the maximum current is reduced due to the current harmonics that increase overproportionally (r0067).

Note: When the parameter value is entered the connection type of the motor (star-delta) must be taken into account.

p0306[0...n] Number of motors connected in parallel / Motor qty

VECTOR_G

Can be changed: C2(1, 3) **Calculated:** - **Access level:** 1
Data type: Unsigned8 **Dynamic index:** MDS, p0130 **Func. diagram:** -
P-Group: Motor **Units group:** - **Unit selection:** -
Not for motor type: FEM **Scaling:** - **Expert list:** 1

Min	Max	Factory setting
1	50	1

Description: Number of motors that can be operated in parallel using one motor data set.

Depending on the motor number entered, internally an equivalent motor is calculated.

The following should be carefully observed for motors connected in series:

The following rating plate data should only be entered for one motor:

- resistances and inductances: p0350 ... p0361
- currents: p0305, p0320, p0323, p0325, p0329, p0389, p0390, p0391, p0392
- power ratings: p0307
- masses/moments of inertia: p0341, p0344

All other parameters take into account the replacement/equivalent motor (e.g. r0331, r0333).

© Siemens AG 2012 All Rights Reserved

Recommend.: For motors connected in parallel, external thermal protection should be provided for each individual motor.

Dependency: Refer to: r0331

Caution: The motors to be connected in parallel must be of the same type and size (same order no. (MLFB)).

The mounting regulations when connecting motors in parallel must be carefully maintained! Especially for synchronous motors, the pole position of motors that are rigidly coupled with one another (mechanically) must be identical.

The number of motors set must correspond to the number of motors that are actually connected in parallel.

After changing p0306, it is imperative that the control parameters are adapted (e.g. using automatic calculation with p0340 = 1).

For synchronous motors connected in parallel with p1300 >= 20, be following applies:

- the individual motors must be mechanically coupled with one another and the EMF must be aligned to one another.

For induction motors that are connected in parallel, but which are not mechanically coupled with one another, then the following applies:

- an individual motor must not be loaded beyond its stall point.

Notice: If p0306 is changed during quick commissioning (p0010 = 1), then the maximum current p0640 is appropriately pre-assigned. This is not the case when commissioning the motor (p0010 = 3).

Note: Only operation with U/f characteristic makes sense if more than 10 identical motors are connected in parallel.

Separately-excited synchronous motors must not be connected in parallel.

Synchronous and reluctance motors that are not coupled with one another align themselves when the pulses are switched in. If the motors have different load levels, then equalization currents flow between the motors.

p0307[0...n] Rated motor power / Mot P_rated

VECTOR_G	**Can be changed:** C2(1, 3)	**Calculated:** -	**Access level:** 1
	Data type: FloatingPoint32	**Dynamic index:** MDS, p0130	**Func. diagram:** -
	P-Group: Motor	**Units group:** 14_6	**Unit selection:** p0100
	Not for motor type: -	**Scaling:** -	**Expert list:** 1
	Min -100000.00 [kW]	**Max** 100000.00 [kW]	**Factory setting** 0.00 [kW]

Description: Sets the rated motor power (rating plate).

Dependency: IECdrives (p0100 = 0): Units kW

NEMA drives (p0100 = 1): Units hp

Refer to: p0100

Caution: When selecting a catalog motor (p0301), this parameter is automatically pre-assigned and is write protected. Information in p0300 should be carefully observed when removing write protection.

Note: For generators, a negative rated power should be entered.

p0308[0...n] Rated motor power factor / Mot cos_phi_rated

VECTOR_G	**Can be changed:** C2(1, 3)	**Calculated:** -	**Access level:** 1
	Data type: FloatingPoint32	**Dynamic index:** MDS, p0130	**Func. diagram:** -
	P-Group: Motor	**Units group:** -	**Unit selection:** -
	Not for motor type: PEM, REL	**Scaling:** -	**Expert list:** 1
	Min 0.000	**Max** 1.000	**Factory setting** 0.000

Description: Sets the rated motor power factor (cos phi, rating plate).

For a parameter value of 0.000, the power factor is internally calculated and displayed in r0332.

Dependency: This parameter is only available for IEC motors (p0100 = 0).

Refer to: p0100, p0309, r0332

Caution: When selecting a catalog motor (p0301), this parameter is automatically pre-assigned and is write protected. Information in p0300 should be carefully observed when removing write protection.

Note: The parameter is not used for synchronous motors (p0300 = 2xx).

© Siemens AG 2012 All Rights Reserved

p0309[0...n] Rated motor efficiency / Mot eta_rated

VECTOR_G	**Can be changed:** C2(1, 3)	**Calculated:** -	**Access level:** 1
	Data type: FloatingPoint32	**Dynamic index:** MDS, p0130	**Func. diagram:** -
	P-Group: Motor	**Units group:** -	**Unit selection:** -
	Not for motor type: PEM, REL	**Scaling:** -	**Expert list:** 1
	Min	**Max**	**Factory setting**
	0.0 [%]	99.9 [%]	0.0 [%]

Description: Sets the rated motor efficiency (rating plate).

For a parameter value of 0.0, the power factor is internally calculated and displayed in r0332.

Dependency: This parameter is only available for NEMA motors (p0100 = 1).

Refer to: p0100, p0308, r0332

Caution: When selecting a catalog motor (p0301), this parameter is automatically pre-assigned and is write protected. Information in p0300 should be carefully observed when removing write protection.

Note: The parameter is not used for synchronous motors (p0300 = 2xx).

p0310[0...n] Rated motor frequency / Mot f_rated

VECTOR_G	**Can be changed:** C2(1, 3)	**Calculated:** -	**Access level:** 1
	Data type: FloatingPoint32	**Dynamic index:** MDS, p0130	**Func. diagram:** 6300
	P-Group: Motor	**Units group:** -	**Unit selection:** -
	Not for motor type: -	**Scaling:** -	**Expert list:** 1
	Min	**Max**	**Factory setting**
	0.00 [Hz]	3000.00 [Hz]	0.00 [Hz]

Description: Sets the rated motor frequency (rating plate).

Dependency: The number of pole pairs (r0313) is automatically re-calculated when the parameter is changed (together with p0311), if p0314 = 0.

The rated frequency is restricted to values between 1.00 Hz and 650.00 Hz.

Refer to: p0311, r0313, p0314

Caution: When selecting a catalog motor (p0301), this parameter is automatically pre-assigned and is write protected. Information in p0300 should be carefully observed when removing write protection.

Notice: If p0310 is changed during quick commissioning (p0010 = 1), the maximum speed p1082, which is also associated with quick commissioning, is pre-assigned accordingly. This is not the case when commissioning the motor (p0010 = 3).

p0311[0...n] Rated motor speed / Mot n_rated

VECTOR_G	**Can be changed:** C2(1, 3)	**Calculated:** -	**Access level:** 1
	Data type: FloatingPoint32	**Dynamic index:** MDS, p0130	**Func. diagram:** -
	P-Group: Motor	**Units group:** -	**Unit selection:** -
	Not for motor type: -	**Scaling:** -	**Expert list:** 1
	Min	**Max**	**Factory setting**
	0.0 [rpm]	210000.0 [rpm]	0.0 [rpm]

Description: Sets the rated motor speed (rating plate).

For VECTOR the following applies (p0107):

For p0311 = 0, the rated motor slip of induction motors is internally calculated and displayed in r0330.

It is especially important to correctly enter the rated motor speed for vector control and slip compensation for U/f control.

Dependency: If p0311 is changed and for p0314 = 0, the pole pair (r0313) is re-calculated automatically.

Refer to: p0310, r0313, p0314

Caution: When selecting a catalog motor (p0301), this parameter is automatically pre-assigned and is write protected. Information in p0300 should be carefully observed when removing write protection.

Notice: If p0311 is changed during quick commissioning (p0010 = 1), the maximum speed p1082, which is also associated with quick commissioning, is pre-assigned accordingly. This is not the case when commissioning the motor (p0010 = 3).

© Siemens AG 2012 All Rights Reserved

r0313[0...n] Motor pole pair number, actual (or calculated) / Mot PolePairNo act

VECTOR_G

Can be changed: -	**Calculated:** -	**Access level:** 2
Data type: Unsigned16	**Dynamic index:** MDS, p0130	**Func. diagram:** 5300
P-Group: Motor	**Units group:** -	**Unit selection:** -
Not for motor type: -	**Scaling:** -	**Expert list:** 1
Min	**Max**	**Factory setting**
-	-	-

Description: Displays the number of motor pole pairs. The value is used for internal calculations.
r0313 = 1: 2-pole motor
r0313 = 2: 4-pole motor, etc.

Dependency: For p0314 > 0, the entered value is displayed in r0313.
For p0314 = 0, the pole pair number (r0313) is automatically calculated from the rated power (p0307), rated frequency (p0310) and rated speed (p0311).
Refer to: p0307, p0310, p0311, p0314

Note: For the automatic calculation, the pole pair number is set to the value of 2 if the rated speed or the rated frequency is zero.

p0314[0...n] Motor pole pair number / Mot pole pair No.

VECTOR_G

Can be changed: C2(1, 3)	**Calculated:** -	**Access level:** 2
Data type: Unsigned16	**Dynamic index:** MDS, p0130	**Func. diagram:** -
P-Group: Motor	**Units group:** -	**Unit selection:** -
Not for motor type: -	**Scaling:** -	**Expert list:** 1
Min	**Max**	**Factory setting**
0	255	0

Description: Sets the motor pole pair number.
p0314 = 1: 2-pole motor
r0314 = 2: 4-pole motor, etc.

Dependency: For p0314 = 0, the pole pair number is automatically calculated from the rated frequency (p0310) and the rated speed (p0311) and displayed in r0313.

Notice: If p0314 is changed during quick commissioning (p0010 = 1), the maximum speed p1082, which is also associated with quick commissioning, is pre-assigned accordingly. This is not the case when commissioning the motor (p0010 = 3).
For induction motors, the value need only be input if the rated data of a generator is entered therefore resulting in a negative rated slip. In this case, the number of pole pairs in r0313 is too low by 1 and must be manually corrected.

p0316[0...n] Motor torque constant / Mot kT

VECTOR_G

Can be changed: C2(1, 3), U, T	**Calculated:** -	**Access level:** 2
Data type: FloatingPoint32	**Dynamic index:** MDS, p0130	**Func. diagram:** -
P-Group: Motor	**Units group:** 28_1	**Unit selection:** p0100
Not for motor type: ASM, REL, FEM	**Scaling:** -	**Expert list:** 1
Min	**Max**	**Factory setting**
0.00 [Nm/A]	400.00 [Nm/A]	0.00 [Nm/A]

Description: Sets the torque constant of the synchronous motor.
p0316 = 0: The torque constant is calculated from the motor data.
p0316 > 0: The selected value is used as torque constant.

Dependency: Refer to: r0334

Caution: When selecting a catalog motor (p0301), this parameter is automatically pre-assigned and is write protected. Information in p0300 should be carefully observed when removing write protection.

Note: This parameter is not used for induction motors (p0300 = 1xx).

© Siemens AG 2012 All Rights Reserved

p0318[0...n] Motor stall current / Mot I_standstill

VECTOR_G	**Can be changed:** C2(3)	**Calculated:** -	**Access level:** 4
	Data type: FloatingPoint32	**Dynamic index:** MDS, p0130	**Func. diagram:** 8017
	P-Group: Motor	**Units group:** -	**Unit selection:** -
	Not for motor type: ASM, REL, FEM	**Scaling:** -	**Expert list:** 1
	Min	**Max**	**Factory setting**
	0.00 [Arms]	10000.00 [Arms]	0.00 [Arms]

Description: Sets the stall current for synchronous motors (p0300 = 2xx).

Caution: When selecting a catalog motor (p0301), this parameter is automatically pre-assigned and is write protected. Information in p0300 should be carefully observed when removing write protection.

Note: The parameter is used for the I2t monitoring of the motor (refer to p0611).

This parameter is not used for induction motors (p0300 = 1xx).

p0320[0...n] Motor rated magnetizing current/short-circuit current / Mot I_mag_rated

VECTOR_G	**Can be changed:** C2(3), U, T	**Calculated:** -	**Access level:** 3
	Data type: FloatingPoint32	**Dynamic index:** MDS, p0130	**Func. diagram:** 5722
	P-Group: Motor	**Units group:** -	**Unit selection:** -
	Not for motor type: REL, FEM	**Scaling:** -	**Expert list:** 1
	Min	**Max**	**Factory setting**
	0.000 [Arms]	5000.000 [Arms]	0.000 [Arms]

Description: Induction motors:

Sets the rated motor magnetizing current.

For p0320 = 0.000 the magnetizing current is internally calculated and displayed in r0331.

Synchronous motors:

Sets the rated motor short-circuit current.

Caution: When selecting a catalog motor (p0301), this parameter is automatically pre-assigned and is write protected. Information in p0300 should be carefully observed when removing write protection.

Note: The magnetization current p0320 for induction motors (not for catalog motors) is reset when quick commissioning is exited with p3900 > 0.

VECTOR:

If, for induction motors, the magnetizing current p0320 is changed outside the commissioning phase (p0010 > 0), then the magnetizing inductance p0360 is changed so that the EMF r0337 remains constant.

p0322[0...n] Maximum motor speed / Mot n_max

VECTOR_G	**Can be changed:** C2(1, 3)	**Calculated:** -	**Access level:** 2
	Data type: FloatingPoint32	**Dynamic index:** MDS, p0130	**Func. diagram:** -
	P-Group: Motor	**Units group:** -	**Unit selection:** -
	Not for motor type: -	**Scaling:** -	**Expert list:** 1
	Min	**Max**	**Factory setting**
	0.0 [rpm]	210000.0 [rpm]	0.0 [rpm]

Description: Sets the maximum motor speed.

Dependency: Refer to: p1082

Caution: When selecting a catalog motor (p0301), this parameter is automatically pre-assigned and is write protected. Information in p0300 should be carefully observed when removing write protection.

Notice: If p0322 is changed during quick commissioning (p0010 = 1), the maximum speed p1082, which is also associated with quick commissioning, is pre-assigned accordingly. This is not the case when commissioning the motor (p0010 = 3).

© Siemens AG 2012 All Rights Reserved

p0323[0...n] Maximum motor current / Mot I_max

VECTOR_G	**Can be changed:** C2(1, 3)	**Calculated:** -	**Access level:** 3
	Data type: FloatingPoint32	**Dynamic index:** MDS, p0130	**Func. diagram:** 5722
	P-Group: Motor	**Units group:** -	**Unit selection:** -
	Not for motor type: ASM, FEM	**Scaling:** -	**Expert list:** 1
	Min	**Max**	**Factory setting**
	0.00 [Arms]	20000.00 [Arms]	0.00 [Arms]

Description: Sets the maximum permissible motor current (e.g. de-magnetizing current for synchronous motors).

Caution: When selecting a catalog motor (p0301), this parameter is automatically pre-assigned and is write protected. Information in p0300 should be carefully observed when removing write protection.

Notice: If p0323 is changed during quick commissioning (p0010 = 1), then the maximum current p0640 is pre-assigned accordingly. This is not the case when commissioning the motor (p0010 = 3).

Note: The parameter has no effect for induction motors.

The parameter has not effect for synchronous motors if a value of 0.0 is entered. The user-selectable current limit is entered into p0640.

p0324[0...n] Winding maximum speed / Winding n_max

VECTOR_G	**Can be changed:** C2(1, 3)	**Calculated:** -	**Access level:** 2
	Data type: FloatingPoint32	**Dynamic index:** MDS, p0130	**Func. diagram:** -
	P-Group: Motor	**Units group:** -	**Unit selection:** -
	Not for motor type: -	**Scaling:** -	**Expert list:** 1
	Min	**Max**	**Factory setting**
	0.0 [rpm]	210000.0 [rpm]	0.0 [rpm]

Description: Sets the maximum speed for the winding.

Dependency: Refer to: p1082

Caution: When selecting a catalog motor (p0301), this parameter is automatically pre-assigned and is write protected. Information in p0300 should be carefully observed when removing write protection.

Notice: If p0324 is changed during quick commissioning (p0010 = 1), then the maximum speed p1082, which is also associated with quick commissioning, is pre-assigned appropriately. This is not the case when commissioning the motor (p0010 = 3).

p0325[0...n] Motor pole position identification current, 1st phase / Mot PolID I 1st ph

VECTOR_G	**Can be changed:** U, T	**Calculated:** -	**Access level:** 3
	Data type: FloatingPoint32	**Dynamic index:** MDS, p0130	**Func. diagram:** -
	P-Group: Motor	**Units group:** -	**Unit selection:** -
	Not for motor type: ASM, REL, FEM	**Scaling:** -	**Expert list:** 1
	Min	**Max**	**Factory setting**
	0.000 [Arms]	10000.000 [Arms]	0.000 [Arms]

Description: Sets the current for the 1st phase of the two-stage technique for pole position identification routine.

The current of the 2nd phase is set in p0329.

The two-stage technique is selected with p1980 = 4.

Dependency: Refer to: p0329, p1980, p1982, r1984, r1985, r1987, p1990

Notice: When the motor code (p0301) is changed, it is possible that p0325 is not pre-assigned.

p0325 can be pre-assigned using p0340 = 3.

Note: The value is automatically pre-assigned for the following events:

- For p0325 = 0 and automatic calculation of the closed-loop control parameters (p0340 = 1, 2, 3).
- for quick commissioning (p3900 = 1, 2, 3).

© Siemens AG 2012 All Rights Reserved

p0327[0...n] Optimum motor load angle / Mot phi_load opt

VECTOR_G	**Can be changed:** C2(3), U, T	**Calculated:** -	**Access level:** 3
	Data type: FloatingPoint32	**Dynamic index:** MDS, p0130	**Func. diagram:** 5722
	P-Group: Motor	**Units group:** -	**Unit selection:** -
	Not for motor type: ASM, REL, FEM	**Scaling:** -	**Expert list:** 1
	Min	**Max**	**Factory setting**
	0.0 [°]	135.0 [°]	90.0 [°]

Description: Sets the optimum load angle for synchronous motors with reluctance torque (e.g. 1FE ... motors).
SERVO: The load angle is measured at 1.5 x rated motor current.
VECTOR: The load angle is measured at the rated motor current.

Caution: When selecting a catalog motor (p0301), this parameter is automatically pre-assigned and is write protected. Information in p0300 should be carefully observed when removing write protection.

Note: This parameter has no significance for induction motors.
For synchronous motors without reluctance torque, a angle of 90 degrees must be set.
When quick commissioning is exited with p3900 > 0, then the parameter is reset if a catalog motor has not been selected (refer to p0300).

p0328[0...n] Motor reluctance torque constant / Mot kT_reluctance

VECTOR_G	**Can be changed:** C2(3), U, T	**Calculated:** -	**Access level:** 3
	Data type: FloatingPoint32	**Dynamic index:** MDS, p0130	**Func. diagram:** -
	P-Group: Motor	**Units group:** -	**Unit selection:** -
	Not for motor type: ASM, REL, FEM	**Scaling:** -	**Expert list:** 1
	Min	**Max**	**Factory setting**
	-1000.00 [mH]	1000.00 [mH]	0.00 [mH]

Description: Sets the reluctance torque constant for synchronous motors with reluctance torque (e.g. 1FE ... motors).
This parameter has no significance for induction motors.

Caution: When selecting a catalog motor (p0301), this parameter is automatically pre-assigned and is write protected. Information in p0300 should be carefully observed when removing write protection.

Note: For synchronous motors without reluctance torque, the value 0 must be set.

p0329[0...n] Motor pole position identification current / Mot PolID current

VECTOR_G	**Can be changed:** C2(3), U, T	**Calculated:** -	**Access level:** 3
	Data type: FloatingPoint32	**Dynamic index:** MDS, p0130	**Func. diagram:** -
	P-Group: Motor	**Units group:** -	**Unit selection:** -
	Not for motor type: ASM, REL, FEM	**Scaling:** -	**Expert list:** 1
	Min	**Max**	**Factory setting**
	0.00 [Arms]	10000.00 [Arms]	0.00 [Arms]

Description: Sets the current for the pole position identification routine (p1980 = 1).
For a two-stage technique (p1980 = 4) , the current is set for the 2nd phase.
The current for the 1st phase is set in p0325.

Dependency: Refer to: p0325, p1980, p1982, r1984, r1985, r1987, p1990

Caution: When selecting a catalog motor (p0301), this parameter is automatically pre-assigned and is write protected. Information in p0300 should be carefully observed when removing write protection.

r0330[0...n] Rated motor slip / Mot slip_rated

VECTOR_G	**Can be changed:** -	**Calculated:** -	**Access level:** 3
	Data type: FloatingPoint32	**Dynamic index:** MDS, p0130	**Func. diagram:** -
	P-Group: Motor	**Units group:** -	**Unit selection:** -
	Not for motor type: PEM, REL, FEM	**Scaling:** -	**Expert list:** 1
	Min	**Max**	**Factory setting**
	- [Hz]	- [Hz]	- [Hz]

Description: Displays the rated motor slip.

© Siemens AG 2012 All Rights Reserved

Dependency: The rated slip is calculated from the rated frequency, rated speed and number of pole pairs.
Refer to: p0310, p0311, r0313

Note: The parameter is not used for synchronous motors (p0300 = 2xx).

r0331[0...n] Actual motor magnetizing current/short-circuit current / Mot I_mag_rtd act

VECTOR_G	**Can be changed:** -	**Calculated:** -	**Access level:** 3
	Data type: FloatingPoint32	**Dynamic index:** MDS, p0130	**Func. diagram:** 5722, 6722, 6724
	P-Group: Motor	**Units group:** -	**Unit selection:** -
	Not for motor type: REL, FEM	**Scaling:** -	**Expert list:** 1
	Min - [Arms]	**Max** - [Arms]	**Factory setting** - [Arms]

Description: Induction motor:
Displays the rated magnetizing current from p0320.
For p0320 = 0, the internally calculated magnetizing current is displayed.
Synchronous motor:
Displays the rated short-circuit current from p0320.

Dependency: If p0320 was not entered, then the parameter is calculated from the rating plate parameters.

Note: In the case of multi-motor operation r0331 is increased by the factor p0306 compared to p0320.

r0332[0...n] Rated motor power factor / Mot cos_phi_rated

VECTOR_G	**Can be changed:** -	**Calculated:** -	**Access level:** 3
	Data type: FloatingPoint32	**Dynamic index:** MDS, p0130	**Func. diagram:** -
	P-Group: Motor	**Units group:** -	**Unit selection:** -
	Not for motor type: PEM, REL	**Scaling:** -	**Expert list:** 1
	Min -	**Max** -	**Factory setting** -

Description: Displays the rated power factor for induction motors.
For IEC motors, the following applies (p0100 = 0):
For p0308 = 0, the internally-calculated power factor is displayed.
For p0308 > 0, this value is displayed.
For NEMA motors, the following applies (p0100 = 1):
For p0309 = 0, the internally-calculated power factor is displayed.
For p0309 > 0, this value is converted into the power factor and displayed.

Dependency: If p0308 is not entered, the parameter is calculated from the rating plate parameters.

Note: The parameter is not used for synchronous motors (p0300 = 2xx).

r0333[0...n] Rated motor torque / Mot M_rated

VECTOR_G	**Can be changed:** -	**Calculated:** -	**Access level:** 3
	Data type: FloatingPoint32	**Dynamic index:** MDS, p0130	**Func. diagram:** -
	P-Group: Motor	**Units group:** 7_4	**Unit selection:** p0100
	Not for motor type: -	**Scaling:** -	**Expert list:** 1
	Min - [Nm]	**Max** - [Nm]	**Factory setting** - [Nm]

Description: Displays the rated motor torque.

Dependency: IEC drives (p0100 = 0): unit Nm
NEMA drives (p0100 = 1): unit lbf ft

Note: For induction and reluctance motors, r0333 is calculated from p0307 and p0311.
For synchronous motors, r0333 is calculated from p0305, p0316, p0327 and p0328. The result can deviate from the input in p0312. If p0316 = 0, then r0333 = p0312 is displayed.
In the case of multi-motor operation r0333 is increased by the factor p0306 compared to the rated torque of an individual motor.

© Siemens AG 2012 All Rights Reserved

r0334[0...n] Actual motor-torque constant / Mot kT act

VECTOR_G

Can be changed: -	**Calculated:** -	**Access level:** 3
Data type: FloatingPoint32	**Dynamic index:** MDS, p0130	**Func. diagram:** -
P-Group: Motor	**Units group:** 28_1	**Unit selection:** p0100
Not for motor type: ASM, REL, FEM	**Scaling:** -	**Expert list:** 1
Min - [Nm/A]	**Max** - [Nm/A]	**Factory setting** - [Nm/A]

Description: Displays the torque constant of the synchronous motor used.

Dependency: IEC drives (p0100 = 0): unit Nm / A

NEMA drives (p0100 = 1): unit lbf ft / A

Refer to: p0316

Note: This parameter is not used for induction motors (p0300 = 1xx).

For synchronous motors, parameter r0334 = p0316 is displayed. For p0316 = 0, r0334 is calculated from p0305 and p0312 or p0305, p0307, and p0311.

p0335[0...n] Motor cooling type / Motor cooling type

VECTOR_G

Can be changed: C2(1, 3), T	**Calculated:** -	**Access level:** 1
Data type: Integer16	**Dynamic index:** MDS, p0130	**Func. diagram:** -
P-Group: Motor	**Units group:** -	**Unit selection:** -
Not for motor type: PEM, REL, FEM	**Scaling:** -	**Expert list:** 1
Min 0	**Max** 128	**Factory setting** 0

Description: Sets the motor cooling system used.

Value:
0: Non-ventilated
1: Forced cooling
2: Liquid cooling
4: Non-ventilated and internal fan
5: Forced cooling and internal fan
6: Liquid cooling and internal fan
128: No fan

Dependency: For 1LA5 and 1LA7 motors (refer to p0300), the parameter is pre-set as a function of p0307 and p0311.

Caution: When selecting a catalog motor (p0301), this parameter is automatically pre-assigned and is write protected. Information in p0300 should be carefully observed when removing write protection.

Note: The parameter influences the thermal 3-mass motor model.

1LA1 and 1LA8 motors are characterized by the fact that they have an internal rotor fan. This "internal cooling" lies within the motor frame and is not visible. Air is not directly exchanged with the motor ambient air. For 1PQ8 motors, p0335 should be set to 5 as these motors are force-ventilated motors.

p0335 = 128 applies for 1LA7 motors, frame size 56. These are operated without a fan.

r0336[0...n] Actual rated motor frequency / Mot f_rated act

VECTOR_G

Can be changed: -	**Calculated:** -	**Access level:** 3
Data type: FloatingPoint32	**Dynamic index:** MDS, p0130	**Func. diagram:** -
P-Group: Motor	**Units group:** -	**Unit selection:** -
Not for motor type: -	**Scaling:** -	**Expert list:** 1
Min - [Hz]	**Max** - [Hz]	**Factory setting** - [Hz]

Description: Displays the rated frequency of the motor.

For p0310 > 0, this value is displayed.

Dependency: Refer to: p0311, p0314

Note: For p0310 = 0 or for synchronous motors, the rated motor frequency r0336 is calculated from the rated speed and the pole pair number.

For p0310 > 0, this value is displayed (not for synchronous motors).

© Siemens AG 2012 All Rights Reserved

r0337[0...n] Rated motor EMF / Mot EMF_rated

VECTOR_G	**Can be changed:** -	**Calculated:** -	**Access level:** 3
	Data type: FloatingPoint32	**Dynamic index:** MDS, p0130	**Func. diagram:** -
	P-Group: Motor	**Units group:** -	**Unit selection:** -
	Not for motor type: REL	**Scaling:** -	**Expert list:** 1
	Min - [Vrms]	**Max** - [Vrms]	**Factory setting** - [Vrms]

Description: Displays the rated EMF of the motor.

Note: EMF: Electromagnetic force

r0339[0...n] Rated motor voltage / Mot U_rated

VECTOR_G	**Can be changed:** -	**Calculated:** -	**Access level:** 3
	Data type: FloatingPoint32	**Dynamic index:** MDS, p0130	**Func. diagram:** -
	P-Group: Motor	**Units group:** -	**Unit selection:** -
	Not for motor type: REL	**Scaling:** -	**Expert list:** 1
	Min - [Vrms]	**Max** - [Vrms]	**Factory setting** - [Vrms]

Description: Displays the rated motor voltage.

Note: For induction motors (p0300 = 1xx) the parameter is set to p0304.

For synchronous motors, parameter r0339 = p0304 is displayed. If p0304 = 0, then r0339 is calculated from p0305 and p0316.

p0340[0...n] Automatic calculation, motor/control parameters / Calc auto par

VECTOR_G	**Can be changed:** C2(3), T	**Calculated:** -	**Access level:** 2
	Data type: Integer16	**Dynamic index:** DDS, p0180	**Func. diagram:** -
	P-Group: Motor	**Units group:** -	**Unit selection:** -
	Not for motor type: -	**Scaling:** -	**Expert list:** 1
	Min 0	**Max** 5	**Factory setting** 0

Description: Setting to automatically calculate motor parameters and U/f open-loop and closed-loop control parameters from the rating plate data.

Value:
0: No calculation
1: Complete calculation
2: Calculation of equivalent circuit diagram parameters
3: Calculation of closed-loop control parameters
4: Calculation of controller parameters
5: Calculation of technological limits and threshold values

Notice: After the value has been modified, no further parameter modifications can be made and the status is shown in r3996. Modifications can be made again when r3996 = 0.

The following parameters are influenced using p0340:

The parameters designated with (*) are not overwritten for catalog motors (p0300 > 100).

SERVO:

p0340 = 1:

--> All of the parameters influenced for p0340 = 2, 3, 4, 5

--> p0341 (*)

--> p0342, p0344, p0600, p0640, p1082, p2000, p2001, p2002, p2003, p2005, p2007

p0340 = 2:

--> p0350 (*), p0354 (*), p0356 (*), p0358 (*), p0360 (*)

--> p0625 (matching p0350), p0626 ... p0628

© Siemens AG 2012 All Rights Reserved

p0340 = 3:

--> All of the parameters influenced for p0340 = 4, 5

--> p0325 (is only calculated for p0325 = 0)

--> p0348 (*) (is only calculated for p0348 = 0)

--> p0441, p0442, p0443, p0444, p0445 (only for 1FT6, 1FK6, 1FK7 motors)

--> p0492, p1082, p1980, p1319, p1326, p1327, p1612, p1752, p1755

p0340 = 4:

--> p1441, p1460, p1462, p1463, p1464, p1465, p1470, p1472, p1590, p1592, p1596, p1656, p1657, p1658, p1659, p1715, p1717

--> p1461 (for p0348 > p0322, p1461 is set to 100 %)

--> p1463 (for p0348 > p0322, p1463 is set to 400 %)

p0340 = 5:

--> p1037, p1038, p1520, p1521, p1530, p1531, p2140 ... p2142, p2148, p2150, p2155, p2161, p2162, p2163, p2164, p2175, p2177, p2194, p3820 ... p3829

VECTOR:

p0340 = 1:

--> All of the parameters influenced for p0340 = 2, 3, 4, 5

--> p0341 (*)

--> p0342, p0344, p0600, p0640, p1082, p1145, p1231, p1232, p1333, p1349, p1360, p1362, p1441, p1442, p1576, p1577, p1609, p1610, p1611, p1619, p1620, p1621, p1654, p1726, p1825, p1828 ... p1832, p1901, p1909, p1959, p2000, p2001, p2002, p2003, p2005, p2007, p3806. p3927, p3928

p0340 = 2:

--> p0350 (*), p0354 ... p0361 (*), p0652 ... p0660

--> p0625 (matching p0350)

p0340 = 3:

--> All of the parameters influenced for p0340 = 4, 5

--> p0346, p0347, p0492, p0622, p1262, p1320 ... p1327, p1582, p1584, p1612, p1616, p1744, p1748, p1749, p1755, p1756, p2178

p0340 = 4:

--> p1290, p1292, p1293, p1299, p1338, p1339, p1340, p1341, p1345, p1346, p1460, p1461, p1462, p1463, p1464, p1465, p1470, p1472, p1590, p1592, p1600, p1628, p1629, p1630, p1643, p1703, p1715, p1717, p1740, p1756, p1757, p1760, p1761, p1764, p1767, p1781, p1783, p1785, p1786, p1795, p7036, p7037, p7038

p0340 = 5:

--> p260 ... p264, p1037, p1038, p1520, p1521, p1530, p1531, p1574, p1750, p1802, p1803, p2140, p2142, p2148, p2150, p2161, p2162, p2163, p2164, p2175, p2177, p2194, p3207, p3208, p3815, p3820 ... p3829

Note: p0340 = 1 contains the calculations of p0340 = 2, 3, 4, 5 without overwriting the motor parameters from the Siemens motor lists (p0301 > 0).

p0340 = 2 calculates the motor parameters (p0350 ... p0360), but only if it does involve a Siemens catalog motor (p0301 = 0).

p0340 = 3 contains the calculations of p0340 = 4, 5.

p0340 = 4 only calculates the controller parameters.

p0340 = 5 only calculates the controller limits.

When quick commissioning is exited using p3900 > 0, p0340 is automatically set to 1.

At the end of the calculations, p0340 is automatically set to 0.

If the STARTER commissioning software writes a 3 into p0340 when "downloading to target device", then this corresponds to a "complete calculation of the motor/control parameters without equivalent circuit diagram data". The same calculations are carried out as for p0340 = 1, however, without the equivalent circuit diagram parameters of the motor (p0340 = 2), the motor moment of inertia (p0341) and the motor weight (p0344).

For third-party linear synchronous motors (p0300 = 4) equivalent circuit diagram data are not calculated (p0340 = 2).

© Siemens AG 2012 All Rights Reserved

p0341[0...n] Motor moment of inertia / Mot M_mom of inert

VECTOR_G

Can be changed: C2(3), U, T	**Calculated:** CALC_MOD_ALL	**Access level:** 3
Data type: FloatingPoint32	**Dynamic index:** MDS, p0130	**Func. diagram:** 1700, 5042, 5210, 6030, 6031
P-Group: Motor	**Units group:** 25_1	**Unit selection:** p0100
Not for motor type: REL	**Scaling:** -	**Expert list:** 1
Min 0.000000 [kgm²]	**Max** 100000.000000 [kgm²]	**Factory setting** 0.000000 [kgm²]

Description: Sets the motor moment of inertia (without load).

Dependency: IEC drives (p0100 = 0): unit kg m^2
NEMA drives (p0100 = 1): unit lb ft^2
The parameter value is included, together with p0342, in the rated starting time of the motor.
Refer to: p0342, r0345

Caution: When selecting a catalog motor (p0301), this parameter is automatically pre-assigned and is write protected. Information in p0300 should be carefully observed when removing write protection.

Note: SERVO:
p0341 * p0342 + p1498 influence the speed/torque pre-control in encoderless operation.
VECTOR:
The product of p0341 * p0342 is used when the speed controller (p0340 = 4) is calculated automatically.

p0342[0...n] Ratio between the total and motor moment of inertia / Mot MomInert Ratio

VECTOR_G

Can be changed: C2(3), U, T	**Calculated:** CALC_MOD_ALL	**Access level:** 3
Data type: FloatingPoint32	**Dynamic index:** MDS, p0130	**Func. diagram:** 1700, 5042, 5210, 6030, 6031
P-Group: Motor	**Units group:** -	**Unit selection:** -
Not for motor type: REL	**Scaling:** -	**Expert list:** 1
Min 1.000	**Max** 10000.000	**Factory setting** 1.000

Description: Sets the ratio between the total moment of inertia/mass (load + motor) and the intrinsic motor moment of inertia/mass (no load).

Dependency: This means that together with p0341, the rated starting (accelerating time) of the motor is calculated for a vector drive.
Refer to: p0341, r0345

Note: SERVO:
p0341 * p0342 + p1498 influence the speed/torque pre-control in encoderless operation.
VECTOR:
The product of p0341 * p0342 is used when the speed controller (p0340 = 4) is calculated automatically.

r0343[0...n] Rated motor current identified / Mot I_rated ident

VECTOR_G

Can be changed: -	**Calculated:** -	**Access level:** 4
Data type: FloatingPoint32	**Dynamic index:** MDS, p0130	**Func. diagram:** -
P-Group: Motor	**Units group:** -	**Unit selection:** -
Not for motor type: -	**Scaling:** -	**Expert list:** 1
Min 0.00 [Arms]	**Max** 10000.00 [Arms]	**Factory setting** - [Arms]

Description: Displays the identified rated motor current.

© Siemens AG 2012 All Rights Reserved

p0344[0...n] Motor weight (for the thermal motor model) / Mot weight th mod

VECTOR_G	**Can be changed:** C2(3), T	**Calculated:** CALC_MOD_ALL	**Access level:** 3
	Data type: FloatingPoint32	**Dynamic index:** MDS, p0130	**Func. diagram:** -
	P-Group: Motor	**Units group:** 27_1	**Unit selection:** p0100
	Not for motor type: -	**Scaling:** -	**Expert list:** 1
	Min 0.0 [kg]	**Max** 50000.0 [kg]	**Factory setting** 0.0 [kg]

Description: Sets the motor weight.

Dependency: IEC drives (p0100 = 0): unit kg

NEMA drives (p0100 = 1): unit lb

Caution: When selecting a catalog motor (p0301), this parameter is automatically pre-assigned and is write protected. Information in p0300 should be carefully observed when removing write protection.

Note: The parameter influences the thermal 3 mass model of the induction motor.

The parameter is not used for synchronous motors (p0300 = 2xx).

r0345[0...n] Nominal motor starting time / Mot t_start_rated

VECTOR_G	**Can be changed:** -	**Calculated:** -	**Access level:** 3
	Data type: FloatingPoint32	**Dynamic index:** MDS, p0130	**Func. diagram:** -
	P-Group: Motor	**Units group:** -	**Unit selection:** -
	Not for motor type: REL	**Scaling:** -	**Expert list:** 1
	Min - [s]	**Max** - [s]	**Factory setting** - [s]

Description: Displays the rated motor starting time.

This time corresponds to the time from standstill up to reaching the motor rated speed and the acceleration with motor rated torque (r0333).

Dependency: Refer to: r0313, r0333, r0336, p0341, p0342

p0346[0...n] Motor excitation build-up time / Mot t_excitation

VECTOR_G	**Can be changed:** C2(3), U, T	**Calculated:** CALC_MOD_REG	**Access level:** 3
	Data type: FloatingPoint32	**Dynamic index:** MDS, p0130	**Func. diagram:** -
	P-Group: Motor	**Units group:** -	**Unit selection:** -
	Not for motor type: -	**Scaling:** -	**Expert list:** 1
	Min -20.000 [s]	**Max** 20.000 [s]	**Factory setting** 0.000 [s]

Description: Sets the excitation build-up time of the motor.

This involves the delay time between enabling the pulses and enabling the ramp-function generator. The induction motor is magnetized during this time.

Caution: If there is insufficient magnetization under load or if the acceleration rate is too high, then an induction motor can stall (refer to the note). This is especially true for sensorless vector control or U/f control.

Notice: If the parameter is set to 0 s for separately-excited synchronous motors (p0300 = 5), then an excitation current setpoint is generated even if the drive is powered down. In the base speed range, this is the no-load excitation current (p0389). In the field-weakening range, the value is reduced with the inverse value of the actual speed. An excitation current setpoint is not generated during de-magnetizing (p0347) and if an encoder fault is detected.

When starting an encoderless separately-excited synchronous motor with vector control from standstill, the rotor position is detected using the field current ramp. The length of the ramp is pre-assigned from the motor data for p0346 = 0 s. If it crystallizes out that this time is too short, then it can be extended by entering a negative value in p0346, whereby otherwise, the excitation behavior corresponds with that for p0346 = 0 s. For all other cases, p0346 is internally limited downwards to 0 s.

Note: The parameter is calculated using p0340 = 1, 3.

For induction motors, the result depends on the rotor time constant (r0384). If this time is excessively reduced, this can result in an inadequate magnetizing of the induction motor. This is the case if the current limit is reached while building up magnetizing. For induction motors, the parameter cannot be set to 0 s (internal limit: 0.1 * r0384).

© Siemens AG 2012 All Rights Reserved

For permanent-magnet synchronous motors and vector control, the value depends on the stator time constant (r0386). Here, it defines the time to establish the current for encoderless operation immediately after the pulses have been enabled.

p0347[0...n] Motor de-excitation time / Mot t_de-excitat.

VECTOR_G

Can be changed: C2(3), U, T	**Calculated:** CALC_MOD_REG	**Access level:** 3
Data type: FloatingPoint32	**Dynamic index:** MDS, p0130	**Func. diagram:** -
P-Group: Motor	**Units group:** -	**Unit selection:** -
Not for motor type: -	**Scaling:** -	**Expert list:** 1
Min	**Max**	**Factory setting**
0.000 [s]	20.000 [s]	0.000 [s]

Description: Sets the de-magnetizing time (for induction motors) after the inverter pulses have been canceled.

The inverter pulses cannot be switched in (enabled) within this delay time.

Note: The parameter is calculated using p0340 = 1, 3.

For induction motors, the result depends on the rotor time constant (r0384).

if this time is shortened too much, then this can result in an inadequate de-magnetizing of the induction motor and in an overcurrent condition when the pulses are subsequently enabled (only when the flying restart function is activated and the motor is rotating).

p0349 System of units, motor equivalent circuit diagram data / Unit_sys mot ESB

VECTOR_G

Can be changed: C2(3)	**Calculated:** -	**Access level:** 1
Data type: Integer16	**Dynamic index:** -	**Func. diagram:** -
P-Group: Motor	**Units group:** -	**Unit selection:** -
Not for motor type: -	**Scaling:** -	**Expert list:** 1
Min	**Max**	**Factory setting**
1	2	1

Description: Sets the actual system of units for motor equivalent circuit diagram data.

Value:
1: System of units, physical
2: System of units, referred

Dependency: Refer to: p0304, p0305, p0310

Note: The reference parameter for resistances of the rated motor impedance Z = p0304 / (1.732 * p0305) is in the % units system.

Inductances are converted into a resistance using the factor 2 * Pi * p0310.

If a reference parameter (p0304, p305, p0310) is zero, then it is not possible to make a changeover to "referred" values (per unit values).

p0350[0...n] Motor stator resistance, cold / Mot R_stator cold

VECTOR_G

Can be changed: C2(3), U, T	**Calculated:** CALC_MOD_EQU	**Access level:** 2
Data type: FloatingPoint32	**Dynamic index:** MDS, p0130	**Func. diagram:** -
P-Group: Motor	**Units group:** 16_1	**Unit selection:** p0349
Not for motor type: -	**Scaling:** -	**Expert list:** 1
Min	**Max**	**Factory setting**
0.00000 [ohm]	2000.00000 [ohm]	0.00000 [ohm]

Description: Sets the stator resistance of the motor at ambient temperature p0625 (phase value).

Dependency: Refer to: p0625, r1912

Caution: When selecting a catalog motor (p0301), this parameter is automatically pre-assigned and is write protected. Information in p0300 should be carefully observed when removing write protection.

Note: The motor identification routine determines the stator resistance from the total stator resistance minus the cable resistance (p0352).

© Siemens AG 2012 All Rights Reserved

p0352[0...n] Cable resistance / Mot R_cable cold

VECTOR_G	**Can be changed:** C2(3), U, T	**Calculated:** -	**Access level:** 2
	Data type: FloatingPoint32	**Dynamic index:** MDS, p0130	**Func. diagram:** -
	P-Group: Motor	**Units group:** 16_1	**Unit selection:** p0349
	Not for motor type: -	**Scaling:** -	**Expert list:** 1
	Min	**Max**	**Factory setting**
	0.00000 [ohm]	120.00000 [ohm]	0.00000 [ohm]

Description: Resistance of the power cable between the Motor Module and motor.

Dependency: Refer to: p7003

Caution: The cable resistance should be entered prior to motor data identification. If it is used subsequently, the difference by which p0352 was changed must be subtracted from the stator resistance p0350 or motor data identification must be repeated.

Notice: Parallel circuits with one winding system (p7003 = 0):

p0352 includes the feeder cable resistance of an individual Motor Module. The total feeder cable resistance is obtained from p0352 divided by the number of activated Motor Modules (refer to r0395).

Parallel circuits with multi-winding system (p7003 = 1):

p0352 includes the complete feeder cable resistance and is directly added to the stator resistance (refer to r0395).

Note: The parameter influences the temperature adaptation of the stator resistance.

The motor identification sets the cable resistance to 20% of the measured total resistance if p0352 is zero at the time that the measurement is made. If p0352 is not zero, then the value is subtracted from the measured total stator resistance to calculate stator resistance p0350. In this case, p0350 is a minimum of 10% of the measured value.

Exception:

For parallel circuit configurations with one winding system (p07003 = 0), the cable resistance is directly measured. It is important to note that only the component of an individual Motor Module is entered into p0352.

The cable resistance is reset when quick commissioning is exited with p3900 > 0.

p0353[0...n] Motor series inductance / Mot L_series

VECTOR_G	**Can be changed:** C2(3), U, T	**Calculated:** -	**Access level:** 2
	Data type: FloatingPoint32	**Dynamic index:** MDS, p0130	**Func. diagram:** -
	P-Group: Motor	**Units group:** 15_1	**Unit selection:** p0349
	Not for motor type: -	**Scaling:** -	**Expert list:** 1
	Min	**Max**	**Factory setting**
	0.000 [mH]	1000000.000 [mH]	0.000 [mH]

Description: Sets the series inductance.

Note: For the automatic calculation with p0340 = 1, 3 or 4, the calculation of p1715 is influenced by p0353.

The series inductance is reset when quick commissioning is exited with p3900 > 0.

p0354[0...n] Motor rotor resistance cold / damping resistance d axis / Mot R_r cold/R_D d

VECTOR_G	**Can be changed:** C2(3), U, T	**Calculated:** CALC_MOD_EQU	**Access level:** 3
	Data type: FloatingPoint32	**Dynamic index:** MDS, p0130	**Func. diagram:** 6727
	P-Group: Motor	**Units group:** 16_1	**Unit selection:** p0349
	Not for motor type: PEM, REL	**Scaling:** -	**Expert list:** 1
	Min	**Max**	**Factory setting**
	0.00000 [ohm]	300.00000 [ohm]	0.00000 [ohm]

Description: Sets the rotor/secondary section resistance of the motor at the ambient temperature p0625.

For separately-excited synchronous motors: Sets the damping resistance in the rotor direction (d-axis).

This parameter value is automatically calculated using the motor model (p0340 = 1, 2) or using the motor data identification routine (p1910) (not for separately-excited synchronous motors).

Dependency: Refer to: p0625

Caution: When selecting a catalog motor (p0301), this parameter is automatically pre-assigned and is write protected. Information in p0300 should be carefully observed when removing write protection.

Note: The parameter is not used for synchronous motors (p0300 = 2xx).

© Siemens AG 2012 All Rights Reserved

p0355[0...n] Motor damping resistance, q axis / Mot R_damp q

VECTOR_G

Can be changed: C2(3), U, T	**Calculated:** CALC_MOD_EQU	**Access level:** 3
Data type: FloatingPoint32	**Dynamic index:** MDS, p0130	**Func. diagram:** 6727
P-Group: Motor	**Units group:** 16_1	**Unit selection:** p0349
Not for motor type: ASM, PEM, REL	**Scaling:** -	**Expert list:** 1
Min	**Max**	**Factory setting**
0.00000 [ohm]	300.00000 [ohm]	0.00000 [ohm]

Description: Sets the damping resistance of the separately-excited synchronous motor quadrature to the rotor direction (q axis).

This parameter value is automatically calculated using the motor model (p0340 = 1, 2).

p0356[0...n] Motor stator leakage inductance / Mot L_stator leak.

VECTOR_G

Can be changed: C2(3), U, T	**Calculated:** CALC_MOD_EQU	**Access level:** 3
Data type: FloatingPoint32	**Dynamic index:** MDS, p0130	**Func. diagram:** -
P-Group: Motor	**Units group:** 15_1	**Unit selection:** p0349
Not for motor type: -	**Scaling:** -	**Expert list:** 1
Min	**Max**	**Factory setting**
0.00000 [mH]	1000.00000 [mH]	0.00000 [mH]

Description: Induction motor, separately-excited synchronous motor: Sets the rotor leakage inductance of the motor.

Synchronous motor: Sets the stator quadrature axis inductance of the motor.

This parameter value is automatically calculated using the motor model (p0340 = 1, 2) or using the motor identification routine (p1910).

Caution: When selecting a catalog motor (p0301), this parameter is automatically pre-assigned and is write protected. Information in p0300 should be carefully observed when removing write protection.

Note: If the stator leakage inductance (p0356) for induction motors is changed outside the commissioning phase (p0010 > 0), the magnetizing inductance (p0360) is automatically adapted to the new EMF (r0337). You are then advised to repeat the measurement for the saturation characteristic (p1960).

For permanent-magnet synchronous motors (p0300 = 2), this is the non-saturated value and is, therefore, ideal for a low current.

p0357[0...n] Motor stator inductance, d axis / Mot L_stator d

VECTOR_G

Can be changed: C2(3), U, T	**Calculated:** CALC_MOD_EQU	**Access level:** 3
Data type: FloatingPoint32	**Dynamic index:** MDS, p0130	**Func. diagram:** -
P-Group: Motor	**Units group:** 15_1	**Unit selection:** p0349
Not for motor type: ASM, REL, FEM	**Scaling:** -	**Expert list:** 1
Min	**Max**	**Factory setting**
0.00000 [mH]	1000.00000 [mH]	0.00000 [mH]

Description: Sets the stator direct-axis inductance of the synchronous motor.

This parameter value is automatically calculated using the motor model (p0340 = 1, 2) or using the motor identification routine (p1910).

Note: The parameter is not used for separately-excited synchronous motors (p0300 = 5).

For permanent-magnet synchronous motors (p0300 = 2), this is the non-saturated value and is ideal for a low current.

p0358[0...n] Motor rotor leakage inductance / damping inductance, d axis / Mot L_r leak / LDd

VECTOR_G

Can be changed: C2(3), U, T	**Calculated:** CALC_MOD_EQU	**Access level:** 3
Data type: FloatingPoint32	**Dynamic index:** MDS, p0130	**Func. diagram:** 6727
P-Group: Motor	**Units group:** 15_1	**Unit selection:** p0349
Not for motor type: PEM, REL	**Scaling:** -	**Expert list:** 1
Min	**Max**	**Factory setting**
0.00000 [mH]	1000.00000 [mH]	0.00000 [mH]

Description: Sets the rotor/secondary section leakage inductance of the motor.

For separately-excited synchronous motors: Sets the damping inductance in the rotor direction (d-axis).

© Siemens AG 2012 All Rights Reserved

This value is automatically calculated using the motor model (p0340 = 1, 2) or using the motor identification routine (p1910) (not for separately-excited synchronous motors).

Caution: When selecting a catalog motor (p0301), this parameter is automatically pre-assigned and is write protected. Information in p0300 should be carefully observed when removing write protection.

Note: The parameter is not used for synchronous motors (p0300 = 2xx).

VECTOR:

If the rotor leakage inductance (p0358) for induction motors is changed outside the commissioning phase (p0010 > 0), then the magnetizing inductance (p0360) is automatically adapted to the new EMF (r0337). You are then advised to repeat the measurement for the saturation characteristic (p1960).

p0359[0...n] Motor damping inductance, q axis / Mot L_damp q

VECTOR_G

Can be changed: C2(3), U, T	**Calculated:** CALC_MOD_EQU	**Access level:** 3
Data type: FloatingPoint32	**Dynamic index:** MDS, p0130	**Func. diagram:** 6727
P-Group: Motor	**Units group:** 15_1	**Unit selection:** p0349
Not for motor type: ASM, PEM, REL	**Scaling:** -	**Expert list:** 1
Min	**Max**	**Factory setting**
0.00000 [mH]	1000.00000 [mH]	0.00000 [mH]

Description: Sets the damping inductance of the separately-excited synchronous motor quadrature to the rotor direction (q axis).

This parameter value is automatically calculated using the motor model (p0340 = 1, 2).

p0360[0...n] Motor magnetizing inductance/magn. inductance, d axis saturated / Mot Lh/Lh d sat

VECTOR_G

Can be changed: C2(3), U, T	**Calculated:** CALC_MOD_EQU	**Access level:** 3
Data type: FloatingPoint32	**Dynamic index:** MDS, p0130	**Func. diagram:** 6727
P-Group: Motor	**Units group:** 15_1	**Unit selection:** p0349
Not for motor type: PEM, REL	**Scaling:** -	**Expert list:** 1
Min	**Max**	**Factory setting**
0.00000 [mH]	10000.00000 [mH]	0.00000 [mH]

Description: Sets the magnetizing inductance of the motor.

For separately-excited synchronous motors: Sets the saturated magnetizing inductance in the rotor direction (d-axis).

This parameter value is automatically calculated using the motor model (p0340 = 1, 2) or using the motor identification routine (p1910) (not for separately-excited synchronous motors).

Caution: When selecting a catalog motor (p0301), this parameter is automatically pre-assigned and is write protected. Information in p0300 should be carefully observed when removing write protection.

Note: The parameter is not used for synchronous motors (p0300 = 2xx).

p0361[0...n] Motor magnetizing inductance q axis, saturated / Mot L_magn q sat

VECTOR_G

Can be changed: C2(3), U, T	**Calculated:** CALC_MOD_EQU	**Access level:** 3
Data type: FloatingPoint32	**Dynamic index:** MDS, p0130	**Func. diagram:** 6727
P-Group: Motor	**Units group:** 15_1	**Unit selection:** p0349
Not for motor type: ASM, PEM, REL	**Scaling:** -	**Expert list:** 1
Min	**Max**	**Factory setting**
0.00000 [mH]	10000.00000 [mH]	0.00000 [mH]

Description: Sets the saturated magnetizing inductance of the separately-excited synchronous motor quadrature to the rotor direction (q axis).

This parameter value is automatically calculated using the motor model (p0340 = 1, 2).

© Siemens AG 2012 All Rights Reserved

p0362[0...n] Motor saturation characteristic flux 1 / Mot saturat.flux 1

VECTOR_G

Can be changed: C2(3), U, T	**Calculated:** -	**Access level:** 3
Data type: FloatingPoint32	**Dynamic index:** MDS, p0130	**Func. diagram:** 6723, 6726
P-Group: Motor	**Units group:** -	**Unit selection:** -
Not for motor type: -	**Scaling:** -	**Expert list:** 1
Min	**Max**	**Factory setting**
10.0 [%]	300.0 [%]	60.0 [%]

Description:

The saturation characteristic (flux as mapping of current) is defined using 4 points.

This parameter specifies the y coordinate (flux) for the 1st value pair of the characteristic.

Induction motors (ASM) and separately-excited synchronous motors (SESM):

The saturation characteristic describes the mapping of the magnetizing current onto the motor flux.

The parameter sets the first motor flux as a [%] referred to the rated motor flux.

Permanent-magnet synchronous motors (PESM):

The saturation characteristic describes the mapping of the stator quadrature axis current onto the stator quadrature axis flux.

The parameter sets the first stator quadrature axis flux as a [%] referred to the product of the unsaturated quadrature inductance (p0356) and the rated motor current.

Dependency:

The following applies for the flux values:

p0362 < p0363 < p0364 < p0365

The following applies for the stator quadrature axis flux values (PESM):

20% < p0362 < p0363 < p0364 < p0365

Refer to: p0366

Caution:

For permanent-magnet synchronous motors (PESM):

If the parameters are not set as specified, i.e. not in ascending order and to more than 20 %, the unsaturated quadrature inductance (p0356) is always used for quadrature axis flux calculation purposes.

Note:

For induction motors, p0362 = 100 % corresponds to the rated motor flux.

For separately-excited synchronous motors p0362 = 100% corresponds to an induced terminal voltage with the magnitude of the rated motor voltage (under no-load conditions at the synchronous speed).

With permanent-magnet synchronous motors, p0362 = 100 % corresponds to the product of the unsaturated quadrature inductance (p0356) and the rated motor current (p0305).

When quick commissioning is exited with p3900 > 0, then the parameter is reset if a catalog motor has not been selected (refer to p0300).

p0363[0...n] Motor saturation characteristic flux 2 / Mot saturat.flux 2

VECTOR_G

Can be changed: C2(3), U, T	**Calculated:** -	**Access level:** 3
Data type: FloatingPoint32	**Dynamic index:** MDS, p0130	**Func. diagram:** 6723, 6726
P-Group: Motor	**Units group:** -	**Unit selection:** -
Not for motor type: -	**Scaling:** -	**Expert list:** 1
Min	**Max**	**Factory setting**
10.0 [%]	300.0 [%]	85.0 [%]

Description:

The saturation characteristic (flux as mapping of current) is defined using 4 points.

This parameter specifies the y coordinate (flux) for the 2nd value pair of the characteristic.

Induction motors (ASM) and separately-excited synchronous motors (SESM):

The saturation characteristic describes the mapping of the magnetizing current onto the motor flux.

The parameter sets the second motor flux as a [%] referred to the rated motor flux.

Permanent-magnet synchronous motors (PESM):

The saturation characteristic describes the mapping of the stator quadrature axis current onto the stator quadrature axis flux.

The parameter sets the second stator quadrature axis flux as a [%] referred to the product of the unsaturated quadrature inductance (p0356) and the rated motor current.

© Siemens AG 2012 All Rights Reserved

Dependency: The following applies for the flux values:
p0362 < p0363 < p0364 < p0365
The following applies for the stator quadrature axis flux values (PESM):
20% < p0362 < p0363 < p0364 < p0365
Refer to: p0367

Caution: For permanent-magnet synchronous motors (PESM):
If the parameters are not set as specified, i.e. not in ascending order and to more than 20 %, the unsaturated quadrature inductance (p0356) is always used for quadrature axis flux calculation purposes.

Note: For induction motors, p0363 = 100 % corresponds to the rated motor flux.
For separately-excited synchronous motors p0363 = 100% corresponds to an induced terminal voltage with the magnitude of the rated motor voltage (under no-load conditions at the synchronous speed).
With permanent-magnet synchronous motors, p0362 = 100 % corresponds to the product of the unsaturated quadrature inductance (p0356) and the rated motor current (p0305).
When quick commissioning is exited with p3900 > 0, then the parameter is reset if a catalog motor has not been selected (refer to p0300).

p0364[0...n] Motor saturation characteristic flux 3 / Mot saturat.flux 3

VECTOR_G

Can be changed: C2(3), U, T	**Calculated:** -	**Access level:** 3
Data type: FloatingPoint32	**Dynamic index:** MDS, p0130	**Func. diagram:** 6723, 6726
P-Group: Motor	**Units group:** -	**Unit selection:** -
Not for motor type: -	**Scaling:** -	**Expert list:** 1
Min	**Max**	**Factory setting**
10.0 [%]	300.0 [%]	115.0 [%]

Description: The saturation characteristic (flux as mapping of current) is defined using 4 points.
This parameter specifies the y coordinate (flux) for the 3rd value pair of the characteristic.
Induction motors (ASM) and separately-excited synchronous motors (SESM):
The saturation characteristic describes the mapping of the magnetizing current onto the motor flux.
The parameter sets the third motor flux as a [%] referred to the rated motor flux.
Permanent-magnet synchronous motors (PESM):
The saturation characteristic describes the mapping of the stator quadrature axis current onto the stator quadrature axis flux.
The parameter sets the third stator quadrature axis flux as a [%] referred to the product of the unsaturated quadrature inductance (p0356) and the rated motor current.

Dependency: The following applies for the flux values:
p0362 < p0363 < p0364 < p0365
The following applies for the stator quadrature axis flux values (PESM):
20% < p0362 < p0363 < p0364 < p0365
Refer to: p0368

Caution: For permanent-magnet synchronous motors (PESM):
If the parameters are not set as specified, i.e. not in ascending order and to more than 20 %, the unsaturated quadrature inductance (p0356) is always used for quadrature axis flux calculation purposes.

Note: For induction motors, p0364 = 100 % corresponds to the rated motor flux.
For separately-excited synchronous motors p0364 = 100% corresponds to an induced terminal voltage with the magnitude of the rated motor voltage (under no-load conditions at the synchronous speed).
With permanent-magnet synchronous motors, p0362 = 100 % corresponds to the product of the unsaturated quadrature inductance (p0356) and the rated motor current (p0305).
When quick commissioning is exited with p3900 > 0, then the parameter is reset if a catalog motor has not been selected (refer to p0300).

© Siemens AG 2012 All Rights Reserved

p0365[0...n] Motor saturation characteristic flux 4 / Mot saturat.flux 4

VECTOR_G

Can be changed: C2(3), U, T	**Calculated:** -	**Access level:** 3
Data type: FloatingPoint32	**Dynamic index:** MDS, p0130	**Func. diagram:** 6723, 6726
P-Group: Motor	**Units group:** -	**Unit selection:** -
Not for motor type: -	**Scaling:** -	**Expert list:** 1
Min	**Max**	**Factory setting**
10.0 [%]	300.0 [%]	125.0 [%]

Description:

The saturation characteristic (flux as mapping of current) is defined using 4 points.

This parameter specifies the y coordinate (flux) for the 4th value pair of the characteristic.

Induction motors (ASM) and separately-excited synchronous motors (SESM):

The saturation characteristic describes the mapping of the magnetizing current onto the motor flux.

The parameter sets the fourth motor flux as a [%] referred to the rated motor flux.

Permanent-magnet synchronous motors (PESM):

The saturation characteristic describes the mapping of the stator quadrature axis current onto the stator quadrature axis flux.

The parameter sets the fourth stator quadrature axis flux as a [%] referred to the product of the unsaturated quadrature inductance (p0356) and the rated motor current.

Dependency:

The following applies for the flux values:

p0362 < p0363 < p0364 < p0365

The following applies for the stator quadrature axis flux values (PESM):

20% < p0362 < p0363 < p0364 < p0365

Refer to: p0369

Caution:

For permanent-magnet synchronous motors (PESM):

If the parameters are not set as specified, i.e. not in ascending order and to more than 20 %, the unsaturated quadrature inductance (p0356) is always used for quadrature axis flux calculation purposes.

Note:

For induction motors, p0365 = 100 % corresponds to the rated motor flux.

For separately-excited synchronous motors p0365 = 100% corresponds to an induced terminal voltage with the magnitude of the rated motor voltage (under no-load conditions at the synchronous speed).

With permanent-magnet synchronous motors, p0362 = 100 % corresponds to the product of the unsaturated quadrature inductance (p0356) and the rated motor current (p0305).

When quick commissioning is exited with p3900 > 0, then the parameter is reset if a catalog motor has not been selected (refer to p0300).

p0366[0...n] Motor saturation characteristic I_mag 1 / Mot sat. I_mag 1

VECTOR_G

Can be changed: C2(3), U, T	**Calculated:** -	**Access level:** 3
Data type: FloatingPoint32	**Dynamic index:** MDS, p0130	**Func. diagram:** 6723, 6726
P-Group: Motor	**Units group:** -	**Unit selection:** -
Not for motor type: -	**Scaling:** -	**Expert list:** 1
Min	**Max**	**Factory setting**
5.0 [%]	800.0 [%]	50.0 [%]

Description:

The saturation characteristic (flux as mapping of current) is defined using 4 points.

This parameter specifies the x coordinate for the 1st value pair of the characteristic.

Induction motors (ASM) and separately-excited synchronous motors (SESM):

The saturation characteristic describes the mapping of the magnetizing current onto the motor flux.

The parameter sets the first magnetizing current as a [%] referred to the rated magnetizing current r0331 (ASM), which in turn is referred to the no-load excitation current (SESM).

Permanent-magnet synchronous motors (PESM):

The saturation characteristic describes the mapping of the stator quadrature axis current onto the stator quadrature axis flux.

The parameter sets the first stator quadrature axis current as a [%] referred to the rated motor current (p0305).

© Siemens AG 2012 All Rights Reserved

Dependency: The following applies for the magnetizing currents:
p0366 < p0367 < p0368 < p0369
The following applies for the stator quadrature axis current values (PESM):
20% < p0366 < p0367 < p0368 < p0369
Refer to: p0362

Caution: For permanent-magnet synchronous motors (PESM):
If the parameters are not set as specified, i.e. not in ascending order and to more than 20 %, the unsaturated quadrature inductance (p0356) is always used for quadrature axis flux calculation purposes.

Note: When quick commissioning is exited with p3900 > 0, then the parameter is reset if a catalog motor has not been selected (refer to p0300).

p0367[0...n] Motor saturation characteristic I_mag 2 / Mot sat. I_mag 2

VECTOR_G

Can be changed: C2(3), U, T	**Calculated:** -	**Access level:** 3
Data type: FloatingPoint32	**Dynamic index:** MDS, p0130	**Func. diagram:** 6723, 6726
P-Group: Motor	**Units group:** -	**Unit selection:** -
Not for motor type: -	**Scaling:** -	**Expert list:** 1
Min	**Max**	**Factory setting**
5.0 [%]	800.0 [%]	75.0 [%]

Description: The saturation characteristic (flux as mapping of current) is defined using 4 points.
This parameter specifies the x coordinate for the 2nd value pair of the characteristic.
Induction motors (ASM) and separately-excited synchronous motors (SESM):
The saturation characteristic describes the mapping of the magnetizing current onto the motor flux.
The parameter sets the second magnetizing current as a [%] referred to the rated magnetizing current r0331 (ASM), which in turn is referred to the no-load excitation current (SESM).
Permanent-magnet synchronous motors (PESM):
The saturation characteristic describes the mapping of the stator quadrature axis current onto the stator quadrature axis flux.
The parameter sets the second stator quadrature axis current as a [%] referred to the rated motor current (p0305).

Dependency: The following applies for the magnetizing currents:
p0366 < p0367 < p0368 < p0369
The following applies for the stator quadrature axis current values (PESM):
20% < p0366 < p0367 < p0368 < p0369
Refer to: p0363

Caution: For permanent-magnet synchronous motors (PESM):
If the parameters are not set as specified, i.e. not in ascending order and to more than 20 %, the unsaturated quadrature inductance (p0356) is always used for quadrature axis flux calculation purposes.

Note: When quick commissioning is exited with p3900 > 0, then the parameter is reset if a catalog motor has not been selected (refer to p0300).

p0368[0...n] Motor saturation characteristic I_mag 3 / Mot sat. I_mag 3

VECTOR_G

Can be changed: C2(3), U, T	**Calculated:** -	**Access level:** 3
Data type: FloatingPoint32	**Dynamic index:** MDS, p0130	**Func. diagram:** 6723, 6726
P-Group: Motor	**Units group:** -	**Unit selection:** -
Not for motor type: -	**Scaling:** -	**Expert list:** 1
Min	**Max**	**Factory setting**
5.0 [%]	800.0 [%]	150.0 [%]

Description: The saturation characteristic (flux as mapping of current) is defined using 4 points.
This parameter specifies the x coordinate for the 3rd value pair of the characteristic.
Induction motors (ASM) and separately-excited synchronous motors (SESM):
The saturation characteristic describes the mapping of the magnetizing current onto the motor flux.
The parameter sets the third magnetizing current as a [%] referred to the rated magnetizing current r0331 (ASM), which in turn is referred to the no-load excitation current (SESM).

© Siemens AG 2012 All Rights Reserved

Permanent-magnet synchronous motors (PESM):

The saturation characteristic describes the mapping of the stator quadrature axis current onto the stator quadrature axis flux.

The parameter sets the third stator quadrature axis current as a [%] referred to the rated motor current (p0305).

Dependency: The following applies for the magnetizing currents:

p0366 < p0367 < p0368 < p0369

The following applies for the stator quadrature axis current values (PESM):

20% < p0366 < p0367 < p0368 < p0369

Refer to: p0364

Caution: For permanent-magnet synchronous motors (PESM):

If the parameters are not set as specified, i.e. not in ascending order and to more than 20 %, the unsaturated quadrature inductance (p0356) is always used for quadrature axis flux calculation purposes.

Note: When quick commissioning is exited with p3900 > 0, then the parameter is reset if a catalog motor has not been selected (refer to p0300).

p0369[0...n] Motor saturation characteristic I_mag 4 / Mot sat. I_mag 4

VECTOR_G

Can be changed: C2(3), U, T	**Calculated:** -	**Access level:** 3
Data type: FloatingPoint32	**Dynamic index:** MDS, p0130	**Func. diagram:** 6723, 6726
P-Group: Motor	**Units group:** -	**Unit selection:** -
Not for motor type: -	**Scaling:** -	**Expert list:** 1
Min	**Max**	**Factory setting**
5.0 [%]	800.0 [%]	210.0 [%]

Description: The saturation characteristic (flux as mapping of current) is defined using 4 points.

This parameter specifies the x coordinate for the 4th value pair of the characteristic.

Induction motors (ASM) and separately-excited synchronous motors (SESM):

The saturation characteristic describes the mapping of the magnetizing current onto the motor flux.

The parameter sets the fourth magnetizing current as a [%] referred to the rated magnetizing current r0331 (ASM), which in turn is referred to the no-load excitation current (SESM).

Permanent-magnet synchronous motors (PESM):

The saturation characteristic describes the mapping of the stator quadrature axis current onto the stator quadrature axis flux.

The parameter sets the fourth stator quadrature axis current as a [%] referred to the rated motor current (p0305).

Dependency: The following applies for the magnetizing currents:

p0366 < p0367 < p0368 < p0369

The following applies for the stator quadrature axis current values (PESM):

20% < p0366 < p0367 < p0368 < p0369

Refer to: p0365

Caution: For permanent-magnet synchronous motors (PESM):

If the parameters are not set as specified, i.e. not in ascending order and to more than 20 %, the unsaturated quadrature inductance (p0356) is always used for quadrature axis flux calculation purposes.

Note: When quick commissioning is exited with p3900 > 0, then the parameter is reset if a catalog motor has not been selected (refer to p0300).

r0370[0...n] Motor stator resistance, cold / Mot R_stator cold

VECTOR_G

Can be changed: -	**Calculated:** -	**Access level:** 4
Data type: FloatingPoint32	**Dynamic index:** MDS, p0130	**Func. diagram:** -
P-Group: Motor	**Units group:** 16_1	**Unit selection:** p0349
Not for motor type: -	**Scaling:** -	**Expert list:** 1
Min	**Max**	**Factory setting**
- [ohm]	- [ohm]	- [ohm]

Description: Displays the motor stator resistance at an ambient temperature (p0625).

The value does not include the cable resistance.

Dependency: Refer to: p0625

© Siemens AG 2012 All Rights Reserved

r0372[0...n] Cable resistance / Mot R_cable

VECTOR_G	**Can be changed:** -	**Calculated:** -	**Access level:** 4
	Data type: FloatingPoint32	**Dynamic index:** MDS, p0130	**Func. diagram:** -
	P-Group: Motor	**Units group:** 16_1	**Unit selection:** p0349
	Not for motor type: -	**Scaling:** -	**Expert list:** 1
	Min - [ohm]	**Max** - [ohm]	**Factory setting** - [ohm]

Description: Displays the total cable resistance between Motor Module and motor, as well as the internal converter resistance.

Dependency: Refer to: r0238, p0352

r0373[0...n] Motor rated stator resistance / Mot R_stator rated

VECTOR_G	**Can be changed:** -	**Calculated:** -	**Access level:** 4
	Data type: FloatingPoint32	**Dynamic index:** MDS, p0130	**Func. diagram:** -
	P-Group: Motor	**Units group:** 16_1	**Unit selection:** p0349
	Not for motor type: PEM, REL, FEM	**Scaling:** -	**Expert list:** 1
	Min - [ohm]	**Max** - [ohm]	**Factory setting** - [ohm]

Description: Displays the rated motor stator resistance at rated temperature (total of p0625 and p0627).

Dependency: Refer to: p0627

Note: The parameter is not used for synchronous motors (p0300 = 2xx).

r0374[0...n] Motor rotor resistance cold / damping resistance d axis / Mot R_r cold / RDd

VECTOR_G	**Can be changed:** -	**Calculated:** -	**Access level:** 4
	Data type: FloatingPoint32	**Dynamic index:** MDS, p0130	**Func. diagram:** -
	P-Group: Motor	**Units group:** 16_1	**Unit selection:** p0349
	Not for motor type: PEM, REL	**Scaling:** -	**Expert list:** 1
	Min - [ohm]	**Max** - [ohm]	**Factory setting** - [ohm]

Description: Displays the rotor/secondary section resistance of the motor for the ambient temperature p0625.
For separately-excited synchronous motors: Displays the damping resistance in the rotor direction (d-axis).

Dependency: Refer to: p0625

Note: The parameter is not used for synchronous motors (p0300 = 2xx).

r0375[0...n] Motor damping resistance, q axis / Mot R_damp q

VECTOR_G	**Can be changed:** -	**Calculated:** -	**Access level:** 4
	Data type: FloatingPoint32	**Dynamic index:** MDS, p0130	**Func. diagram:** -
	P-Group: Motor	**Units group:** 16_1	**Unit selection:** p0349
	Not for motor type: ASM, PEM, REL	**Scaling:** -	**Expert list:** 1
	Min - [ohm]	**Max** - [ohm]	**Factory setting** - [ohm]

Description: Displays the damping resistance of the separately-excited synchronous motor quadrature to the rotor direction (q axis).

r0376[0...n] Rated motor rotor resistance / Mot R_rotor rated

VECTOR_G	**Can be changed:** -	**Calculated:** -	**Access level:** 4
	Data type: FloatingPoint32	**Dynamic index:** MDS, p0130	**Func. diagram:** -
	P-Group: Motor	**Units group:** 16_1	**Unit selection:** p0349
	Not for motor type: PEM, REL, FEM	**Scaling:** -	**Expert list:** 1
	Min - [ohm]	**Max** - [ohm]	**Factory setting** - [ohm]

Description: Displays the rated (nominal) rotor/secondary section resistance of the motor at the rated temperature (total of p0625 and p0628).

© Siemens AG 2012 All Rights Reserved

Dependency: Refer to: p0628
Note: The parameter is not used for synchronous motors (p0300 = 2xx).

r0377[0...n] Motor leakage inductance, total / Mot L_leak total

VECTOR_G

Can be changed: -	**Calculated:** -	**Access level:** 4
Data type: FloatingPoint32	**Dynamic index:** MDS, p0130	**Func. diagram:** 6640
P-Group: Motor	**Units group:** 15_1	**Unit selection:** p0349
Not for motor type: -	**Scaling:** -	**Expert list:** 1
Min	**Max**	**Factory setting**
- [mH]	- [mH]	- [mH]

Description: Induction motor, separately-excited synchronous motor:
Displays the stator leakage inductance of the motor, including the series inductance (p0353) and the motor reactor (p0233).
Synchronous motor:
Displays the stator quadrature inductance, including the series inductance (p0353) and the motor reactor (p0233).

r0378[0...n] Motor stator inductance, d axis / Mot L_stator d

VECTOR_G

Can be changed: -	**Calculated:** -	**Access level:** 4
Data type: FloatingPoint32	**Dynamic index:** MDS, p0130	**Func. diagram:** -
P-Group: Motor	**Units group:** 15_1	**Unit selection:** p0349
Not for motor type: ASM, REL, FEM	**Scaling:** -	**Expert list:** 1
Min	**Max**	**Factory setting**
- [mH]	- [mH]	- [mH]

Description: Displays the stator longitudinal inductance of the synchronous motor including the series inductance (p0353) and the motor reactor (p0233).
Note: The parameter is not used for separately-excited synchronous motors (p0300 = 5).

r0380[0...n] Motor damping inductance, d axis / Mot L_damping_d

VECTOR_G

Can be changed: -	**Calculated:** -	**Access level:** 4
Data type: FloatingPoint32	**Dynamic index:** MDS, p0130	**Func. diagram:** -
P-Group: Motor	**Units group:** 15_1	**Unit selection:** p0349
Not for motor type: ASM, PEM, REL	**Scaling:** -	**Expert list:** 1
Min	**Max**	**Factory setting**
- [mH]	- [mH]	- [mH]

Description: Displays the damping inductance of the separately-excited synchronous motor in the rotor direction (d-axis).

r0381[0...n] Motor damping inductance, q axis / Mot L_damping_q

VECTOR_G

Can be changed: -	**Calculated:** -	**Access level:** 4
Data type: FloatingPoint32	**Dynamic index:** MDS, p0130	**Func. diagram:** -
P-Group: Motor	**Units group:** 15_1	**Unit selection:** p0349
Not for motor type: ASM, PEM, REL	**Scaling:** -	**Expert list:** 1
Min	**Max**	**Factory setting**
- [mH]	- [mH]	- [mH]

Description: Displays the damping inductance of a separately-excited synchronous motor quadrature to the rotor direction (q axis).

© Siemens AG 2012 All Rights Reserved

r0382[0...n] Motor magnetizing inductance transformed / Lh d axis saturated / Mot L_m tr/Lhd sat

VECTOR_G	**Can be changed:** -	**Calculated:** -	**Access level:** 4
	Data type: FloatingPoint32	**Dynamic index:** MDS, p0130	**Func. diagram:** -
	P-Group: Motor	**Units group:** 15_1	**Unit selection:** p0349
	Not for motor type: PEM, REL	**Scaling:** -	**Expert list:** 1
	Min - [mH]	**Max** - [mH]	**Factory setting** - [mH]

Description: Displays the magnetizing inductance of the motor.

For separately-excited synchronous motors: Displays the saturated magnetizing inductance in the rotor direction (d-axis).

Note: The parameter is not used for synchronous motors (p0300 = 2xx).

r0383[0...n] Motor magnetizing inductance q axis, saturated / Mot L_magn q sat

VECTOR_G	**Can be changed:** -	**Calculated:** -	**Access level:** 4
	Data type: FloatingPoint32	**Dynamic index:** MDS, p0130	**Func. diagram:** -
	P-Group: Motor	**Units group:** 15_1	**Unit selection:** p0349
	Not for motor type: ASM, PEM, REL	**Scaling:** -	**Expert list:** 1
	Min - [mH]	**Max** - [mH]	**Factory setting** - [mH]

Description: Displays the saturated magnetizing inductance of a separately-excited synchronous motor quadrature to the rotor direction (q axis).

r0384[0...n] Motor rotor time constant / damping time constant d axis / Mot T_rotor/T_Dd

VECTOR_G	**Can be changed:** -	**Calculated:** -	**Access level:** 4
	Data type: FloatingPoint32	**Dynamic index:** MDS, p0130	**Func. diagram:** 6722
	P-Group: Motor	**Units group:** -	**Unit selection:** -
	Not for motor type: PEM, REL	**Scaling:** -	**Expert list:** 1
	Min - [ms]	**Max** - [ms]	**Factory setting** - [ms]

Description: Displays the rotor time constant.

For separately-excited synchronous motors: Displays the damping time constant in the rotor direction (d-axis).

Note: The parameter is not used for synchronous motors.

The value is calculated from the total of the inductances on the rotor side (p0358, p0360) divided by the rotor/damping resistance (p0354). The temperature adaptation of the rotor resistance for induction motors is not taken into account.

r0385[0...n] Motor damping time constant, q axis / Mot L_damping q

VECTOR_G	**Can be changed:** -	**Calculated:** -	**Access level:** 4
	Data type: FloatingPoint32	**Dynamic index:** MDS, p0130	**Func. diagram:** -
	P-Group: Motor	**Units group:** -	**Unit selection:** -
	Not for motor type: ASM, PEM, REL	**Scaling:** -	**Expert list:** 1
	Min - [ms]	**Max** - [ms]	**Factory setting** - [ms]

Description: Displays the damping time constant of a separately-excited synchronous motor quadrature to the rotor direction (q axis).

Note: The value is calculated from the total of the inductances on the damping side (p0359, p0361) divided by the damping resistance (p0355).

© Siemens AG 2012 All Rights Reserved

r0386[0...n] Motor stator leakage time constant / Mot T_stator leak

VECTOR_G

Can be changed: -	**Calculated:** -	**Access level:** 4
Data type: FloatingPoint32	**Dynamic index:** MDS, p0130	**Func. diagram:** -
P-Group: Motor	**Units group:** -	**Unit selection:** -
Not for motor type: -	**Scaling:** -	**Expert list:** 1
Min	**Max**	**Factory setting**
- [ms]	- [ms]	- [ms]

Description: Displays the stator leakage time constant.

Note: The value is calculated from the total of all leakage inductances (p0233*, p0353, p0356, p0358) divided by the total of all motor resistances (p0350, p0352, p0354). The temperature adaptation of the resistances is not taken into account.

* only applies for VECTOR (r0107).

r0387[0...n] Motor stator leakage time constant, q axis / Mot T_Sleak /T_Sq

VECTOR_G

Can be changed: -	**Calculated:** -	**Access level:** 4
Data type: FloatingPoint32	**Dynamic index:** MDS, p0130	**Func. diagram:** -
P-Group: Motor	**Units group:** -	**Unit selection:** -
Not for motor type: ASM, REL, FEM	**Scaling:** -	**Expert list:** 1
Min	**Max**	**Factory setting**
- [ms]	- [ms]	- [ms]

Description: Displays the stator leakage time constant quadrature to the rotor direction (q axis).

Note: The value is calculated from the total of all leakage inductances (p0233, p0356, p0359) divided by the total of all motor resistances (p0350, p0352, p0355).

The temperature adaptation of the resistances is not taken into account.

p0389[0...n] Excitation rated no-load current / Exc I_noload_rated

VECTOR_G

Can be changed: C2(1, 3)	**Calculated:** -	**Access level:** 1
Data type: FloatingPoint32	**Dynamic index:** MDS, p0130	**Func. diagram:** 6727
P-Group: Motor	**Units group:** -	**Unit selection:** -
Not for motor type: ASM, PEM, REL	**Scaling:** -	**Expert list:** 1
Min	**Max**	**Factory setting**
0.00 [A]	10000.00 [A]	0.00 [A]

Description: Sets the rated no-load current (I_F0) for the excitation.

p0390[0...n] Rated excitation current / Exc I_rated

VECTOR_G

Can be changed: C2(1, 3)	**Calculated:** -	**Access level:** 1
Data type: FloatingPoint32	**Dynamic index:** MDS, p0130	**Func. diagram:** 6727
P-Group: Motor	**Units group:** -	**Unit selection:** -
Not for motor type: ASM, PEM, REL	**Scaling:** -	**Expert list:** 1
Min	**Max**	**Factory setting**
0.00 [A]	10000.00 [A]	0.00 [A]

Description: Setting the rated current (I_F) of the controlled excitation rectifier (DC master).

p0391[0...n] Current controller adaptation, starting point KP / I_adapt pt KP

VECTOR_G

Can be changed: C2(3), U, T	**Calculated:** CALC_MOD_REG	**Access level:** 3
Data type: FloatingPoint32	**Dynamic index:** MDS, p0130	**Func. diagram:** 6714
P-Group: Motor	**Units group:** -	**Unit selection:** -
Not for motor type: REL	**Scaling:** -	**Expert list:** 1
Min	**Max**	**Factory setting**
0.00 [Arms]	6000.00 [Arms]	0.00 [Arms]

Description: Sets the starting point of the current-dependent current controller adaptation where the current controller gain p1715 is effective.

© Siemens AG 2012 All Rights Reserved

Dependency: Refer to: p0392, p0393, p1402, p1715

Caution: When selecting a catalog motor (p0301), this parameter is automatically pre-assigned and is write protected. Information in p0300 should be carefully observed when removing write protection.

Note: When quick commissioning is exited with p3900 > 0, then the parameter is reset if a catalog motor has not been selected (refer to p0300).

p0392[0...n] Current controller adaptation, starting point KP adapted / I_adapt pt KP adap

VECTOR_G	**Can be changed:** C2(3), U, T	**Calculated:** CALC_MOD_REG	**Access level:** 3
	Data type: FloatingPoint32	**Dynamic index:** MDS, p0130	**Func. diagram:** 6714
	P-Group: Motor	**Units group:** -	**Unit selection:** -
	Not for motor type: REL	**Scaling:** -	**Expert list:** 1
	Min 0.00 [Arms]	**Max** 6000.00 [Arms]	**Factory setting** 0.00 [Arms]

Description: Sets the starting point of the current-dependent current controller adaptation where the adapted current controller gain p1715 x p0393 is effective.

Dependency: Refer to: p0391, p0393, p1402, p1715

Caution: When selecting a catalog motor (p0301), this parameter is automatically pre-assigned and is write protected. Information in p0300 should be carefully observed when removing write protection.

Note: When quick commissioning is exited with p3900 > 0, then the parameter is reset if a catalog motor has not been selected (refer to p0300).

p0393[0...n] Current controller adaptation P gain scaling / I_adapt Kp scal

VECTOR_G	**Can be changed:** C2(3), U, T	**Calculated:** CALC_MOD_REG	**Access level:** 3
	Data type: FloatingPoint32	**Dynamic index:** MDS, p0130	**Func. diagram:** 6714
	P-Group: Motor	**Units group:** -	**Unit selection:** -
	Not for motor type: REL	**Scaling:** -	**Expert list:** 1
	Min 0.00 [%]	**Max** 1000.00 [%]	**Factory setting** 100.00 [%]

Description: Sets the factor for the current controller P gain in the adaptation range (e.g. r0078 > p0392, if p0392 > p0391).

The value is referred to p1715.

Dependency: Refer to: p0391, p0392, p1402, p1715

Caution: When selecting a catalog motor (p0301), this parameter is automatically pre-assigned and is write protected. Information in p0300 should be carefully observed when removing write protection.

Note: For p0393 = 100 % or p1402.2 = 0, the current controller adaptation is disabled and p1715 is effective over the entire range.

When quick commissioning is exited with p3900 > 0, then the parameter is reset if a catalog motor has not been selected (refer to p0300).

r0395[0...n] Actual stator resistance / R_stator act

VECTOR_G	**Can be changed:** -	**Calculated:** -	**Access level:** 3
	Data type: FloatingPoint32	**Dynamic index:** MDS, p0130	**Func. diagram:** 6300, 6730, 6731, 6732
	P-Group: Motor	**Units group:** 16_1	**Unit selection:** p0349
	Not for motor type: -	**Scaling:** -	**Expert list:** 1
	Min - [ohm]	**Max** - [ohm]	**Factory setting** - [ohm]

Description: Displays the actual stator resistance (phase value).

The parameter value also contains the temperature-independent cable resistance.

Dependency: In the case of induction motors the parameter is also affected by the motor temperature model.

Refer to: p0350, p0352, p0620

Note: In each case, only the stator resistance of the active Motor Data Set is included with the stator temperature of the thermal motor model.

© Siemens AG 2012 All Rights Reserved

r0396[0...n] Actual rotor resistance / R_rotor act

VECTOR_G

Can be changed: -	**Calculated:** -	**Access level:** 3
Data type: FloatingPoint32	**Dynamic index:** MDS, p0130	**Func. diagram:** 6730
P-Group: Motor	**Units group:** 16_1	**Unit selection:** p0349
Not for motor type: PEM, REL, FEM	**Scaling:** -	**Expert list:** 1
Min	**Max**	**Factory setting**
- [ohm]	- [ohm]	- [ohm]

Description: Displays the actual rotor/secondary section resistance (phase value).

The parameter is affected by the motor temperature model.

Dependency: Refer to: p0354, p0620

Note: In each case, only the rotor resistance of the active Motor Data Set is included with the rotor temperature of the thermal motor model.

This parameter is not used for synchronous motors (p0300 = 2xx).

p0398[0...n] Angle magn decoupling (cross saturation) coeff 1 / Magn decoupl C1

VECTOR_G

Can be changed: C2(3), U, T	**Calculated:** CALC_MOD_EQU	**Access level:** 4
Data type: FloatingPoint32	**Dynamic index:** MDS, p0130	**Func. diagram:** -
P-Group: Motor	**Units group:** -	**Unit selection:** -
Not for motor type: ASM, FEM	**Scaling:** -	**Expert list:** 1
Min	**Max**	**Factory setting**
-10.000000	10.000000	0.000000

Description: The magnetic cross coupling of the motor's d and q axes caused by saturation (current-dependent) leads to an angle offset affecting the axis system d'q'; this decouples the magnetic quantities.

The angle offset can be described as a 3rd order polynomial function of the load current consumed:

phiOffset = f(C1*iq + C3*iq^3)

This parameter is the coefficient C1; it describes the linear load impact effect.

p0399[0...n] Angle magn decoupling (cross saturation) coeff 3 / Magn decoupl C3

VECTOR_G

Can be changed: C2(3), U, T	**Calculated:** CALC_MOD_EQU	**Access level:** 4
Data type: FloatingPoint32	**Dynamic index:** MDS, p0130	**Func. diagram:** -
P-Group: Motor	**Units group:** -	**Unit selection:** -
Not for motor type: ASM, FEM	**Scaling:** -	**Expert list:** 1
Min	**Max**	**Factory setting**
-10.000000	10.000000	0.000000

Description: The magnetic cross coupling of the motor's d and q axes caused by saturation (current-dependent) leads to an angle offset affecting the axis system d'q'; this decouples the magnetic quantities.

The angle offset can be described as a 3rd order polynomial function of the load current consumed:

phiOffset = f(C1*iq + C3*iq^3)

This parameter is the coefficient C3; it describes the cubic load impact effect.

p0400[0...n] Encoder type selection / Enc_typ sel

ENC

Can be changed: C2(1, 4)	**Calculated:** -	**Access level:** 1
Data type: Integer16	**Dynamic index:** EDS, p0140	**Func. diagram:** 1580, 4704
P-Group: Encoder	**Units group:** -	**Unit selection:** -
Not for motor type: -	**Scaling:** -	**Expert list:** 1
Min	**Max**	**Factory setting**
0	10100	0

Description: Selects the encoder from the list of encoder types supported.

Value:
- 0: No encoder
- 202: DRIVE-CLiQ encoder AS20, singleturn
- 204: DRIVE-CLiQ encoder AM20, multiturn 4096
- 242: DRIVE-CLiQ encoder AS24, singleturn
- 244: DRIVE-CLiQ encoder AM24, multiturn 4096

© Siemens AG 2012 All Rights Reserved

1001: Resolver 1 speed
1002: Resolver 2 speed
1003: Resolver 3 speed
1004: Resolver 4 speed
2001: 2048, 1 Vpp, A/B C/D R
2002: 2048, 1 Vpp, A/B R
2003: 256, 1 Vpp, A/B R
2004: 400, 1 Vpp, A/B R
2005: 512, 1 Vpp, A/B R
2006: 192, 1 Vpp, A/B R
2007: 480, 1 Vpp, A/B R
2008: 800, 1 Vpp, A/B R
2010: 18000, 1 Vpp, A/B R distance-coded
2051: 2048, 1 Vpp, A/B, EnDat, Multiturn 4096
2052: 32, 1 Vpp, A/B, EnDat, Multiturn 4096
2053: 512, 1 Vpp, A/B, EnDat, Multiturn 4096
2054: 16, 1 Vpp, A/B, EnDat, Multiturn 4096
2055: 2048, 1 Vpp, A/B, EnDat, Singleturn
2081: 2048, 1 Vpp, A/B, SSI, Singleturn
2082: 2048, 1 Vpp, A/B, SSI, Multiturn 4096
2083: 2048, 1 Vpp, A/B, SSI, singleturn, error bit
2084: 2048, 1 Vpp, A/B, SSI, multiturn 4096, error bit
2110: 4000 nm, 1 Vpp, A/B R distance-coded
2111: 20000 nm, 1 Vpp, A/B R distance-coded
2112: 40000 nm, 1 Vpp, A/B R distance-coded
2151: 16000 nm, 1 Vpp, A/B, EnDat, resolution 100 nm
3001: 1024 HTL A/B R
3002: 1024 TTL A/B R
3003: 2048 HTL A/B R
3005: 1024 HTL A/B
3006: 1024 TTL A/B
3007: 2048 HTL A/B
3008: 2048 TTL A/B
3009: 1024 HTL A/B unipolar
3011: 2048 HTL A/B unipolar
3020: 2048 TTL A/B R, with sense
3081: SSI, Singleturn, 24 V
3082: SSI, Multiturn 4096, 24 V
3090: 4096, HTL, A/B, SSI, Singleturn
3109: 2000 nm, TTL, A/B R distance-coded
9999: User-defined
10000: Identify encoder
10050: Encoder with EnDat2.1 interface identified
10051: DRIVE-CLiQ encoder identified
10058: Digital encoder (absolute) identified
10059: Digital encoder (incremental) identified
10100: Identify encoder (waiting)

Caution: An encoder type with p0400 < 9999 defines an encoder for which there is an encoder parameter list. When selecting a catalog encoder (p0400 < 9999) the parameters from the encoder parameter list cannot be changed (write protection). To remove write protection, the encoder type should be set to a third-party encoder (p0400 = 9999).

Note: The connected encoder can be identified by setting p0400 to 10000 or 10100. This assumes that the encoder supports this method, which is possible in the following cases: Motor with DRIVE-CLiQ, encoder with EnDat interface, DRIVE-CLiQ encoder.

The encoder data (e.g. pulse number p0408) can only be changed when p0400 = 9999.

When using an encoder with track A/B and zero pulse, as standard, fine synchronization is not set using a zero mark. If, for a synchronous motor, fine synchronization is to be realized using a zero mark, then the following must be executed:

- set p0400 to 9999
- set p0404.15 to 1

Prerequisite:

Coarse synchronization must be selected (e.g. pole position identification) and the zero pulse of the encoder must be either mechanically or electronically (p0431) adjusted to the pole position.

© Siemens AG 2012 All Rights Reserved

For p0400 = 10000 the following applies:
If an identification is not possible, then p0400 is set to 0.
For p0400 = 10100 the following applies:
If an identification is not possible, p0400 remains set to 10100 until it becomes possible.

p0400[0...n] Encoder type selection / Enc_typ sel

VECTOR_G

Can be changed: C2(1, 4)	**Calculated:** -	**Access level:** 1
Data type: Integer16	**Dynamic index:** EDS, p0140	**Func. diagram:** 1580, 4704
P-Group: Encoder	**Units group:** -	**Unit selection:** -
Not for motor type: -	**Scaling:** -	**Expert list:** 1
Min	**Max**	**Factory setting**
0	10000	0

Description: Selects the encoder from the list of encoder types supported.

Value:
0: No encoder
3001: 1024 HTL A/B R
3002: 1024 TTL A/B R
3003: 2048 HTL A/B R
3005: 1024 HTL A/B
3006: 1024 TTL A/B
3007: 2048 HTL A/B
3008: 2048 TTL A/B
3009: 1024 HTL A/B unipolar
3011: 2048 HTL A/B unipolar
3020: 2048 TTL A/B R, with sense
9999: User-defined
10000: Identify encoder

Caution: An encoder type with p0400 < 9999 defines an encoder for which there is an encoder parameter list. When selecting a catalog encoder (p0400 < 9999) the parameters from the encoder parameter list cannot be changed (write protection). To remove write protection, the encoder type should be set to a third-party encoder (p0400 = 9999).

Note: The connected encoder can be identified by setting p0400 to 10000 or 10100. This assumes that the encoder supports this method, which is possible in the following cases: Motor with DRIVE-CLiQ, encoder with EnDat interface, DRIVE-CLiQ encoder.

The encoder data (e.g. pulse number p0408) can only be changed when p0400 = 9999.

When using an encoder with track A/B and zero pulse, as standard, fine synchronization is not set using a zero mark. If, for a synchronous motor, fine synchronization is to be realized using a zero mark, then the following must be executed:

- set p0400 to 9999
- set p0404.15 to 1

Prerequisite:

Coarse synchronization must be selected (e.g. pole position identification) and the zero pulse of the encoder must be either mechanically or electronically (p0431) adjusted to the pole position.

For p0400 = 10000 the following applies:
If an identification is not possible, then p0400 is set to 0.
For p0400 = 10100 the following applies:
If an identification is not possible, p0400 remains set to 10100 until it becomes possible.

p0401[0...n] Encoder type, OEM selection / Enc type OEM sel

ENC, VECTOR_G

Can be changed: C2(1, 4)	**Calculated:** -	**Access level:** 2
Data type: Integer16	**Dynamic index:** EDS, p0140	**Func. diagram:** 1580, 4704
P-Group: Encoder	**Units group:** -	**Unit selection:** -
Not for motor type: -	**Scaling:** -	**Expert list:** 1
Min	**Max**	**Factory setting**
0	32767	0

Description: Selects the encoder from the list of encoder types that the OEM supports.

Note: The connected encoder can be identified by p0400 = 10000. This means that the encoder must support this and is possible in the following cases: Motor with DRIVE-CLiQ, encoder with EnDat interface.

© Siemens AG 2012 All Rights Reserved

If an identification is not possible, then p0400 is set to 0.
The encoder data (e.g. pulse number p0408) can only be changed when p0400 = 9999.
Using p0400 = 20000, the encoder type can be selected from the list of OEM encoders using p0401.

p0402[0...n] Gearbox type selection / Gearbox type sel

ENC, VECTOR_G

Can be changed: C2(1, 4)	**Calculated:** -	**Access level:** 1
Data type: Integer16	**Dynamic index:** EDS, p0140	**Func. diagram:** -
P-Group: Encoder	**Units group:** -	**Unit selection:** -
Not for motor type: -	**Scaling:** -	**Expert list:** 1
Min	**Max**	**Factory setting**
1	10100	9999

Description: Selects the gearbox type to pre-set the inversion and the gearbox factor.
Measuring gear factor = motor or load revolutions / encoder revolutions.

Value:
1: Gearbox 1:1 not inverted
2: Gearbox 2:7 inverted
3: Gearbox 4:17 inverted
4: Gearbox 2:10 inverted
9999: Gearbox, user-defined
10000: Identify gearbox
10100: Identify gearbox

Dependency: Refer to: p0410, p0432, p0433

Note: Re p0402 = 1:
Automatic setting of p0410 = 0000 bin, p0432 = 1, p0433 = 1.
Re p0402 = 2:
Automatic setting of p0410 = 0011 bin, p0432 = 7, p0433 = 2.
Re p0402 = 3:
Automatic setting of p0410 = 0011 bin, p0432 = 17, p0433 = 4.
Re p0402 = 4:
Automatic setting of p0410 = 0011 bin, p0432 = 10, p0433 = 2.
Re p0402 = 9999:
No automatic setting of p0410, p0432, p0433. The parameters should be manually set.
Re p0402 = 10000:
It is only possible to identify the gearbox type for a motor with DRIVE-CLiQ. Parameters p0410, p0432 and p0433 are set corresponding to the identified gearbox. If an identification is not possible, then p0402 is set to 9999.

p0404[0...n] Encoder configuration effective / Enc_config eff

ENC, VECTOR_G

Can be changed: C2(4)	**Calculated:** -	**Access level:** 3
Data type: Unsigned32	**Dynamic index:** EDS, p0140	**Func. diagram:** 4010, 4704
P-Group: Encoder	**Units group:** -	**Unit selection:** -
Not for motor type: -	**Scaling:** -	**Expert list:** 1
Min	**Max**	**Factory setting**
-	-	0000 0000 0000 0000 0000 0000 0000 0000 bin

Description: Settings for the basic encoder properties.

Bit field:

Bit	Signal name	1 signal	0 signal	FP
00	Linear encoder	Yes	No	-
01	Absolute encoder	Yes	No	-
02	Multiturn encoder	Yes	No	-
03	Track A/B sq-wave	Yes	No	-
04	Track A/B sine	Yes	No	-
05	Track C/D	Yes	No	-
06	Hall sensor	Yes	No	-
08	EnDat encoder	Yes	No	-
09	SSI encoder	Yes	No	-
10	DRIVE-CLiQ encoder	Yes	No	-
11	Digital encoder	Yes	No	-

© Siemens AG 2012 All Rights Reserved

12	Equidistant zero mark	Yes	No	-
13	Irregular zero mark	Yes	No	-
14	Distance-coded zero mark	Yes	No	-
15	Commutation with zero mark (not ASM)	Yes	No	-
16	Acceleration	Yes	No	-
17	Track A/B analog	Yes	No	-
20	Voltage level 5 V	Yes	No	-
21	Voltage level 24 V	Yes	No	-
22	Remote sense (only SMC30)	Yes	No	-
23	Resolver excit.	Yes	No	-

Caution: This parameter is automatically pre-set for encoders from the encoder list (p0400).

When selecting a catalog encoder, this parameter cannot be changed (write protection). Information in p0400 should be carefully observed when removing write protection.

Notice: If an SSI encoder (bit 9 = 1) is used as motor encoder for permanent-magnet synchronous motors, then this is only permissible in conjunction with an additional A/B track (bit 3 = 1 or bit 4 = 1).

Note: ZM: Zero mark

SMC: Sensor Module Cabinet

If a technique to determine the commutation information/data has not been selected (e.g. track C/D, Hall sensor), and the encoder pulse number is an integer multiple of the pole number, then the following applies:

The track A/B is adjusted to match the magnetic position of the motor.

Re bit 01, 02 (absolute encoder, multiturn encoder):

These bits can only be selected for EnDat encoders, SSI encoders or DRIVE-CLiQ encoders.

Re bit 10 (DRIVE-CLiQ encoder):

This bit is only used for the large-scale integrated DRIVE-CLiQ encoders that provide their encoder data directly in DRIVE-CLiQ format without converting this data. This bit is not, therefore, set for first-generation DRIVE-CLiQ encoders.

Re bit 12 (equidistant zero mark):

The zero marks occur at regular intervals (e.g. rotary encoder with 1 zero mark per revolution or linear encoder with constant zero mark distance).

The bit activates monitoring of the zero mark distance (p0424/p0425, linear/rotary) or in the case of the linear encoder with 1 zero mark and p0424 = 0 zero mark monitoring is activated.

Re bit 13 (irregular zero mark):

The zero marks occur at irregular intervals (e.g. a linear scale with only 1 zero mark in the traversing range). The zero mark distance is not monitored.

Re bit 14 (distance-coded zero mark):

The distance (clearance) between two or several consecutive zero marks allows the absolute position to be calculated.

Re bit 15 (commutation with zero mark):

Only applicable for synchronous motors.

The function can be de-selected by priority via p0430.23.

For distance-coded zero marks, the following applies:

The phase sequence of the C/D track (if available) must be the same as the phase sequence of the encoder (A/B track).

The phase sequence of the Hall signal (if available) must be the same as the phase sequence of the motor. Further, the position of the Hall sensor must be mechanically adjusted to the motor EMF.

The fine synchronization is only started after two zero marks have been passed.

p0405[0...n] Square-wave encoder track A/B / Sq-wave enc A/B

ENC, VECTOR_G

Can be changed: C2(4)	**Calculated:** -	**Access level:** 3
Data type: Unsigned32	**Dynamic index:** EDS, p0140	**Func. diagram:** 4704
P-Group: Encoder	**Units group:** -	**Unit selection:** -
Not for motor type: -	**Scaling:** -	**Expert list:** 1
Min	**Max**	**Factory setting**
-	-	0000 1111 bin

Description: Settings for the track A/B in a square-wave encoder.

For square-wave encoders, p0404.3 must also be 1.

© Siemens AG 2012 All Rights Reserved

Bit field:

Bit	Signal name	1 signal	0 signal	FP
00	Signal	Bipolar	Unipolar	-
01	Level	TTL	HTL	-
02	Track monitoring	A/B <> -A/B	None	-
03	Zero pulse	Same as A/B track	24 V unipolar	-
04	Switching thresh	High	Low	-
05	Pulse/direction	Active	Inactive	-

Caution: This parameter is automatically pre-set for encoders from the encoder list (p0400). When selecting a catalog encoder, this parameter cannot be changed (write protection). Information in p0400 should be carefully observed when removing write protection.

Note: Re bit 02:

When the function is activated, track monitoring can be de-activated by setting p0437.26.

Re bit 05:

When the function is activated, a frequency setpoint and a direction for traveling can be entered via an encoder interface.

p0407[0...n] Linear encoder grid division / Enc grid div

ENC, VECTOR_G

Can be changed: C2(4)	**Calculated:** -	**Access level:** 3
Data type: Unsigned32	**Dynamic index:** EDS, p0140	**Func. diagram:** 4010, 4704
P-Group: Encoder	**Units group:** -	**Unit selection:** -
Not for motor type: -	**Scaling:** -	**Expert list:** 1
Min	**Max**	**Factory setting**
0 [nm]	250000000 [nm]	16000 [nm]

Description: Sets the grid division for a linear encoder.

Caution: This parameter is automatically pre-set for encoders from the encoder list (p0400). When selecting a catalog encoder, this parameter cannot be changed (write protection). Information in p0400 should be carefully observed when removing write protection.

Note: The lowest permissible value is 250 nm.

p0408[0...n] Rotary encoder pulse No. / Rot enc pulse No.

ENC, VECTOR_G

Can be changed: C2(4)	**Calculated:** -	**Access level:** 3
Data type: Unsigned32	**Dynamic index:** EDS, p0140	**Func. diagram:** 4010, 4704
P-Group: Encoder	**Units group:** -	**Unit selection:** -
Not for motor type: -	**Scaling:** -	**Expert list:** 1
Min	**Max**	**Factory setting**
0	16777215	2048

Description: Sets the number of pulses for a rotary encoder.

Caution: This parameter is automatically pre-set for encoders from the encoder list (p0400). When selecting a catalog encoder, this parameter cannot be changed (write protection). Information in p0400 should be carefully observed when removing write protection.

Note: The number of pole pairs for a resolver is entered here.

The smallest permissible value is 1 pulse.

p0410[0...n] Encoder inversion actual value / Enc inv act value

ENC, VECTOR_G

Can be changed: C2(4)	**Calculated:** -	**Access level:** 3
Data type: Unsigned16	**Dynamic index:** EDS, p0140	**Func. diagram:** 4704, 4710, 4711, 4715
P-Group: Encoder	**Units group:** -	**Unit selection:** -
Not for motor type: -	**Scaling:** -	**Expert list:** 1
Min	**Max**	**Factory setting**
-	-	0000 bin

Description: Setting to invert actual values.

© Siemens AG 2012 All Rights Reserved

Bit field:

Bit	Signal name	1 signal	0 signal	FP
00	Invert speed actual value	Yes	No	4710, 4711, 4715
01	Invert position actual value	Yes	No	4704

Note: The inversion influences the following parameters:
Bit 00: r0061, r0063 (exception: encoderless control), r0094
Bit 01: r0482, r0483

p0410[0...n] Encoder inversion actual value / Enc inv act value

ENC (Lin_enc)

Can be changed: C2(4) **Calculated:** - **Access level:** 3
Data type: Unsigned16 **Dynamic index:** EDS, p0140 **Func. diagram:** 4704, 4710, 4711, 4715
P-Group: Encoder **Units group:** - **Unit selection:** -
Not for motor type: - **Scaling:** - **Expert list:** 1

Min	Max	Factory setting
-	-	0000 bin

Description: Setting to invert actual values.

Bit field:

Bit	Signal name	1 signal	0 signal	FP
00	Invert velocity actual value	Yes	No	4710, 4711, 4715
01	Invert position actual value	Yes	No	4704

Note: The inversion influences the following parameters:
Bit 00: r0061, r0063 (exception: encoderless control), r0094
Bit 01: r0482, r0483

p0411[0...n] Measuring gear, configuration / Meas gear config

ENC, VECTOR_G

Can be changed: C2(4) **Calculated:** - **Access level:** 1
Data type: Unsigned32 **Dynamic index:** EDS, p0140 **Func. diagram:** 4704
P-Group: Encoder **Units group:** - **Unit selection:** -
Not for motor type: - **Scaling:** - **Expert list:** 1

Min	Max	Factory setting
-	-	0000 bin

Description: Sets the configuration for position tracking of a measuring gear.

Bit field:

Bit	Signal name	1 signal	0 signal	FP
00	Measuring gear, activate position tracking	Yes	No	-
01	Axis type	Linear axis	Rotary axis	-
02	Measuring gear, reset position	Yes	No	-
03	Meas. gearbox, activate pos. tracking for incremental encoders	Yes	No	-

Notice: For p0411.3 = 1 the following applies:
If position tracking is activated for incremental encoders, only the position actual value is stored. Axis or encoder motion is not detected when de-activated! Any tolerance window entered in p0413 has no effect.

Note: For the following events, the non-volatile, saved position values are automatically reset:
- when an encoder replacement has been identified.
- when changing the configuration of the Encoder Data Set (EDS).

© Siemens AG 2012 All Rights Reserved

p0412[0...n] Measuring gear, absolute encoder, rotary, revolutions, virtual / Abs rot rev

ENC, VECTOR_G

Can be changed: C2(4)	**Calculated:** -	**Access level:** 1
Data type: Unsigned32	**Dynamic index:** EDS, p0140	**Func. diagram:** 4704
P-Group: Encoder	**Units group:** -	**Unit selection:** -
Not for motor type: -	**Scaling:** -	**Expert list:** 1
Min	**Max**	**Factory setting**
0	4194303	0

Description: Sets the number of rotations that can be resolved for a rotary encoder with activated position tracking of the measuring gear.

Dependency: This parameter is only of significance for an absolute encoder (p0404.1 = 1) with activated position tracking (p0411.0 = 1) and for an incremental encoder with activated position tracking (p0411.3 = 1).

Note: The resolution that is set must be able to be represented using r0483.

For rotary axes/modulo axes, the following applies:

p0411.0 = 1:

This parameter is pre-set with p0421 and can be changed.

p0411.3 = 1:

The parameter value is pre-set to the highest possible value. The highest possible value depends on the pulse number (p0408) and the fine resolution (p0419).

For linear axes, the following applies:

p0411.0 = 1:

This parameter is pre-assigned with p0421, expanded by 6 bits for multiturn information (maximum number of overflows) and cannot be changed.

p0411.3 = 1:

The parameter value is pre-set to the highest possible value. The highest possible value depends on the pulse number (p0408) and the fine resolution (p0419).

p0413[0...n] Measuring gear, position tracking tolerance window / Pos track window

ENC, VECTOR_G

Can be changed: C2(4)	**Calculated:** -	**Access level:** 3
Data type: FloatingPoint32	**Dynamic index:** EDS, p0140	**Func. diagram:** -
P-Group: Encoder	**Units group:** -	**Unit selection:** -
Not for motor type: -	**Scaling:** -	**Expert list:** 1
Min	**Max**	**Factory setting**
0.00	4294967300.00	0.00

Description: Sets a tolerance window for position tracking.

After the system is powered up, the difference between the saved position and the actual position is determined, and depending on this, the following is initiated:

Difference within the tolerance window --> The position is reproduced as a result of the encoder actual value.

Difference outside the tolerance window --> An appropriate message is output.

Dependency: Refer to: F31501, F32501, F33501

Caution: Rotation, e.g. through a complete encoder range is not detected.

Note: The value is entered in integer (complete) encoder pulses.

For p0411.0 = 1, the value is automatically pre-assigned quarter of the encoder range.

Example:

Quarter of the encoder range = (p0408 * p0421) / 4

It is possible that the tolerance window may not be able to be precisely set due to the data type (floating point number with 23 bit mantissa).

© Siemens AG 2012 All Rights Reserved

p0414[0...n] Redundant coarse position value relevant bits (identified) / Relevant bits

ENC, VECTOR_G	**Can be changed:** C2(4)	**Calculated:** -	**Access level:** 3
	Data type: Unsigned16	**Dynamic index:** EDS, p0140	**Func. diagram:** -
	P-Group: Encoder	**Units group:** -	**Unit selection:** -
	Not for motor type: -	**Scaling:** -	**Expert list:** 1
	Min	**Max**	**Factory setting**
	0	16	16

Description: Sets the number of relevant bits for the redundant coarse position value.

p0415[0...n] Gx_XIST1 Coarse position safe most significant bit (identified) / Gx_XIST1 safe MSB

ENC, VECTOR_G	**Can be changed:** C2(4)	**Calculated:** -	**Access level:** 3
	Data type: Unsigned16	**Dynamic index:** EDS, p0140	**Func. diagram:** -
	P-Group: Encoder	**Units group:** -	**Unit selection:** -
	Not for motor type: -	**Scaling:** -	**Expert list:** 1
	Min	**Max**	**Factory setting**
	0	31	14

Description: Sets the bit number for the safe most significant bit (MSB) of the Gx_XIST1 coarse position.

Note: MSB: Most Significant Bit

p0416[0...n] Non safety-relevant meas. steps position value pos1 (detected) / nsrPos1

ENC, VECTOR_G	**Can be changed:** C2(4)	**Calculated:** -	**Access level:** 3
	Data type: Unsigned32	**Dynamic index:** EDS, p0140	**Func. diagram:** -
	P-Group: Encoder	**Units group:** -	**Unit selection:** -
	Not for motor type: -	**Scaling:** -	**Expert list:** 1
	Min	**Max**	**Factory setting**
	0	4294967295	22000

Description: Sets the non safety-relevant measuring steps of POS1.

Dependency: Refer to: r0473, p9513

p0417[0...n] Encoder safety comparison algorithm (detected) / Safety CompAlgo

ENC, VECTOR_G	**Can be changed:** C2(4)	**Calculated:** -	**Access level:** 3
	Data type: Integer16	**Dynamic index:** EDS, p0140	**Func. diagram:** -
	P-Group: Encoder	**Units group:** -	**Unit selection:** -
	Not for motor type: -	**Scaling:** -	**Expert list:** 1
	Min	**Max**	**Factory setting**
	0	255	255

Description: Sets the the comparison algorithm for the encoder position monitoring functions.

Value:
0: SMx20 safety algorithm
10: DQL binary safety algorithm
11: DQL linear non-binary safety algorithm
255: Safety algorithm unknown

Dependency: Refer to: p9541

p0418[0...n] Fine resolution Gx_XIST1 (in bits) / Enc fine Gx_XIST1

ENC, VECTOR_G	**Can be changed:** C2(4)	**Calculated:** -	**Access level:** 3
	Data type: Unsigned8	**Dynamic index:** EDS, p0140	**Func. diagram:** 4010, 4704
	P-Group: Encoder	**Units group:** -	**Unit selection:** -
	Not for motor type: -	**Scaling:** -	**Expert list:** 1
	Min	**Max**	**Factory setting**
	2	18	11

Description: Sets the fine resolution in bits of the incremental position actual values.

© Siemens AG 2012 All Rights Reserved

Note: The parameter applies for the following process data:
- Gx_XIST1
- Gx_XIST2 for reference mark or flying measurement

The fine resolution specifies the fraction between two encoder pulses. Depending on the physical measurement principle, an encoder pulse can be broken down into a different number of fractions (e.g. squarewave encoder: 2 bit = resolution 4, sin/cos encoder: Typical 11 bit = resolution 2048).

For a squarewave encoder, with the factory setting, the least significant bits have the value zero, i.e. they do not supply any useful information.

For especially high quality measuring systems, the fine resolution must be increased corresponding to the available accuracy.

p0419[0...n] Fine resolution absolute value Gx_XIST2 (in bits) / Enc fine Gx_XIST2

ENC, VECTOR_G

Can be changed: C2(4)	**Calculated:** -	**Access level:** 3
Data type: Unsigned8	**Dynamic index:** EDS, p0140	**Func. diagram:** 4704, 4710
P-Group: Encoder	**Units group:** -	**Unit selection:** -
Not for motor type: -	**Scaling:** -	**Expert list:** 1
Min	**Max**	**Factory setting**
2	18	9

Description: Sets the fine resolution in bits of the absolute position actual values.

Dependency: Refer to: p0418

Note: This parameter applies to process data Gx_XIST2 when reading the absolute value.

p0420[0...n] Encoder connection / Enc_connection

ENC, VECTOR_G

Can be changed: C2(4)	**Calculated:** -	**Access level:** 4
Data type: Unsigned16	**Dynamic index:** EDS, p0140	**Func. diagram:** -
P-Group: Encoder	**Units group:** -	**Unit selection:** -
Not for motor type: -	**Scaling:** -	**Expert list:** 1
Min	**Max**	**Factory setting**
-	-	0000 bin

Description: Selecting the encoder connection.

Bit field:

Bit	Signal name	1 signal	0 signal	FP
00	SUB-D	Yes	No	-
01	Terminal	Yes	No	-

p0421[0...n] Absolute encoder rotary multiturn resolution / Enc abs multiturn

ENC, VECTOR_G

Can be changed: C2(4)	**Calculated:** -	**Access level:** 3
Data type: Unsigned16	**Dynamic index:** EDS, p0140	**Func. diagram:** 4704
P-Group: Encoder	**Units group:** -	**Unit selection:** -
Not for motor type: -	**Scaling:** -	**Expert list:** 1
Min	**Max**	**Factory setting**
0	65535	4096

Description: Sets the number of rotations that can be resolved for a rotary absolute encoder.

Caution: This parameter is automatically pre-set for encoders from the encoder list (p0400). When selecting a catalog encoder, this parameter cannot be changed (write protection). Information in p0400 should be carefully observed when removing write protection.

© Siemens AG 2012 All Rights Reserved

p0422[0...n] Absolute encoder linear measuring step resolution / Enc abs meas step

ENC, VECTOR_G	**Can be changed:** C2(4)	**Calculated:** -	**Access level:** 3
	Data type: Unsigned32	**Dynamic index:** EDS, p0140	**Func. diagram:** 4704
	P-Group: Encoder	**Units group:** -	**Unit selection:** -
	Not for motor type: -	**Scaling:** -	**Expert list:** 1
	Min	**Max**	**Factory setting**
	0 [nm]	4294967295 [nm]	100 [nm]

Description: Sets the resolution of the absolute position for a linear absolute encoder.

Caution: This parameter is automatically pre-set for encoders from the encoder list (p0400). When selecting a catalog encoder, this parameter cannot be changed (write protection). Information in p0400 should be carefully observed when removing write protection.

Note: The serial protocol of an absolute encoder provides the position with a certain resolution , e.g. 100 nm. This value must be entered here.

p0423[0...n] Absolute encoder rotary singleturn resolution / Enc abs singleturn

ENC, VECTOR_G	**Can be changed:** C2(4)	**Calculated:** -	**Access level:** 3
	Data type: Unsigned32	**Dynamic index:** EDS, p0140	**Func. diagram:** 4704
	P-Group: Encoder	**Units group:** -	**Unit selection:** -
	Not for motor type: -	**Scaling:** -	**Expert list:** 1
	Min	**Max**	**Factory setting**
	0	1073741823	8192

Description: Sets the number of measuring steps per revolution for a rotary absolute encoder. The resolution refers to the absolute position.

Caution: This parameter is automatically pre-set for encoders from the encoder list (p0400). When selecting a catalog encoder, this parameter cannot be changed (write protection). Information in p0400 should be carefully observed when removing write protection.

p0424[0...n] Encoder, linear zero mark distance / Enc lin ZM_dist

ENC, VECTOR_G	**Can be changed:** C2(4)	**Calculated:** -	**Access level:** 3
	Data type: Unsigned16	**Dynamic index:** EDS, p0140	**Func. diagram:** -
	P-Group: Encoder	**Units group:** -	**Unit selection:** -
	Not for motor type: -	**Scaling:** -	**Expert list:** 1
	Min	**Max**	**Factory setting**
	0 [mm]	65535 [mm]	20 [mm]

Description: Sets the distance between two zero marks for a linear encoder. This information is used for zero mark monitoring.

Caution: This parameter is automatically pre-set for encoders from the encoder list (p0400). When selecting a catalog encoder, this parameter cannot be changed (write protection). Information in p0400 should be carefully observed when removing write protection.

Note: For distance-coded zero marks, this means the basic distance.

p0425[0...n] Encoder, rotary zero mark distance / Enc rot dist ZM

ENC, VECTOR_G	**Can be changed:** C2(4)	**Calculated:** -	**Access level:** 3
	Data type: Unsigned32	**Dynamic index:** EDS, p0140	**Func. diagram:** 4704, 8570
	P-Group: Encoder	**Units group:** -	**Unit selection:** -
	Not for motor type: -	**Scaling:** -	**Expert list:** 1
	Min	**Max**	**Factory setting**
	0	16777215	2048

Description: Sets the distance in pulses between two zero marks for a rotary encoder. This information is used for zero mark monitoring.

Caution: This parameter is automatically pre-set for encoders from the encoder list (p0400). When selecting a catalog encoder, this parameter cannot be changed (write protection). Information in p0400 should be carefully observed when removing write protection.

Note: For distance-coded zero marks, this means the basic distance.

© Siemens AG 2012 All Rights Reserved

p0426[0...n] Encoder zero mark differential distance / Enc ZM Dif_dist

ENC, VECTOR_G

Can be changed: C2(4)	**Calculated:** -	**Access level:** 3
Data type: Unsigned16	**Dynamic index:** EDS, p0140	**Func. diagram:** -
P-Group: Encoder	**Units group:** -	**Unit selection:** -
Not for motor type: -	**Scaling:** -	**Expert list:** 1
Min	**Max**	**Factory setting**
1	65535	1

Description: Sets the differential distance with distance-coded zero marks [signal periods].
The value corresponds to jump displacement of "zero mark with interference".

Caution: This parameter is automatically pre-set for encoders from the encoder list (p0400). When selecting a catalog encoder, this parameter cannot be changed (write protection). Information in p0400 should be carefully observed when removing write protection.

p0427[0...n] Encoder SSI baud rate / Enc SSI baud rate

ENC, VECTOR_G

Can be changed: C2(4)	**Calculated:** -	**Access level:** 3
Data type: FloatingPoint32	**Dynamic index:** EDS, p0140	**Func. diagram:** -
P-Group: Encoder	**Units group:** -	**Unit selection:** -
Not for motor type: -	**Scaling:** -	**Expert list:** 1
Min	**Max**	**Factory setting**
0 [kHz]	65535 [kHz]	100 [kHz]

Description: Sets the baud rate for an SSI encoder.

Caution: This parameter is automatically pre-set for encoders from the encoder list (p0400). When selecting a catalog encoder, this parameter cannot be changed (write protection). Information in p0400 should be carefully observed when removing write protection.

Note: SSI: Synchronous Serial Interface

p0428[0...n] Encoder SSI monoflop time / Enc SSI t_monoflop

ENC, VECTOR_G

Can be changed: C2(4)	**Calculated:** -	**Access level:** 3
Data type: Unsigned16	**Dynamic index:** EDS, p0140	**Func. diagram:** -
P-Group: Encoder	**Units group:** -	**Unit selection:** -
Not for motor type: -	**Scaling:** -	**Expert list:** 1
Min	**Max**	**Factory setting**
0 [µs]	65535 [µs]	30 [µs]

Description: Sets the minimum delay time between two data transfers of the absolute value for an SSI encoder.

Caution: This parameter is automatically pre-set for encoders from the encoder list (p0400). When selecting a catalog encoder, this parameter cannot be changed (write protection). Information in p0400 should be carefully observed when removing write protection.

p0429[0...n] Encoder SSI configuration / Enc SSI config

ENC, VECTOR_G

Can be changed: C2(4)	**Calculated:** -	**Access level:** 3
Data type: Unsigned16	**Dynamic index:** EDS, p0140	**Func. diagram:** -
P-Group: Encoder	**Units group:** -	**Unit selection:** -
Not for motor type: -	**Scaling:** -	**Expert list:** 1
Min	**Max**	**Factory setting**
-	-	0000 0000 bin

Description: Sets the configuration for an SSI encoder.

Bit field:

Bit	Signal name	1 signal	0 signal	FP
00	Transfer code	Binary code	Gray code	-
02	Transfer absolute value twice	Yes	No	-
06	Data line during the monoflop time	High level	Low level	-

Caution: This parameter is automatically pre-set for encoders from the encoder list (p0400). When selecting a catalog encoder, this parameter cannot be changed (write protection). Information in p0400 should be carefully observed when removing write protection.

© Siemens AG 2012 All Rights Reserved

Note: Re bit 06:
The quiescent signal level of the data line corresponds to the inverted, set level.

p0430[0...n] Sensor Module configuration / SM config

ENC, VECTOR_G

Can be changed: C2(4)	**Calculated:** -	**Access level:** 3
Data type: Unsigned32	**Dynamic index:** EDS, p0140	**Func. diagram:** -
P-Group: Encoder	**Units group:** -	**Unit selection:** -
Not for motor type: -	**Scaling:** -	**Expert list:** 1
Min	**Max**	**Factory setting**
-	-	1110 0000 0000 1000 0000 0000 0000 0000 bin

Description: Sets the configuration of the Sensor Module.

Bit field:

Bit	Signal name	1 signal	0 signal	FP
17	Burst oversampling	Yes	No	-
18	Continuous oversampling (reserved)	Yes	No	-
19	Safety position actual value sensing	Yes	No	-
20	Speed calculation mode (only SMC30)	Incremental diff	Flank time meas	-
21	Zero mark tolerance	Yes	No	-
22	Rot pos adapt	Yes	No	-
23	De-select commutation with zero mark	Yes	No	-
24	Commutation with selected zero mark	Yes	No	-
25	Switch off encoder voltage supply during parking	Yes	No	-
27	Extrapolate position values	Yes	No	-
28	Cubic correction	Yes	No	-
29	Phase correction	Yes	No	-
30	Amplitude correction	Yes	No	-
31	Offset correction	Yes	No	-

Notice: A bit-wise configuration is only possible if the corresponding property is also present in r0458.

Note: Re bit 17 (burst oversampling):
- if bit = 1, burst oversampling is switched on.

Re bit 18 (continuous oversampling):
- if bit = 1, continuous oversampling is switched on.

Re bit 19 (Safety position actual value sensing):
- if bit = 1, the Safety position actual value is transferred in the cyclic telegram.

Re bit 20 (speed calculation mode):
- if bit = 1, the speed is calculated via incremental difference without extrapolation.
- if bit = 0, the speed is calculated via edge time measurement with extrapolation. p0453 is effective in this mode.

Re bit 21 (zero mark tolerance):
- if bit = 1, a one-off zero mark distance error is tolerated. In the event of a defect, the fault F3x100/F3x101 does not appear, but alarm A3x400/A3x401 does.

Re bit 22 (rotor position adaptation):
- if bit = 1, the rotor position is corrected automatically. The correction speed is +/-1/4 encoder pulse per zero mark distance.

Re bit 23 (de-select commutation with zero mark):
- The bit should only be set for encoders that have not been adjusted.

Re bit 24 (commutation with selected zero mark):
- if bit = 1, the commutation position is corrected via a selected zero mark.

Re bit 25 (disconnect the encoder power supply on parking):
- if bit = 1, the encoder power supply is switched off on parking (0 V).
- if bit = 0, the encoder power supply is not switched off on parking, it is reduced from 24 V to 5 V.

Re bit 27 (extrapolate position values):
- if bit = 1, the extrapolation of the position values is activated.

Re bit 28 (cubic correction);
- if bit = 1, the cubic correction for track A/B sine is activated.

© Siemens AG 2012 All Rights Reserved

Re bit 29 (phase correction):
- if bit = 1, the phase correction for track A/B sine is activated.
Re bit 30 (amplitude correction):
- if bit = 1, the amplitude correction for track A/B sine is activated.
Re bit 31 (offset correction):
- if bit = 1, the offset correction for track A/B sine is activated.

p0430[0...n] Sensor Module configuration / SM config

ENC (Lin_enc)

Can be changed: C2(4)	**Calculated:** -	**Access level:** 3
Data type: Unsigned32	**Dynamic index:** EDS, p0140	**Func. diagram:** -
P-Group: Encoder	**Units group:** -	**Unit selection:** -
Not for motor type: -	**Scaling:** -	**Expert list:** 1
Min	**Max**	**Factory setting**
-	-	1110 0000 0000 1000 0000 0000 0000 0000 bin

Description: Sets the configuration of the Sensor Module.

Bit field:

Bit	Signal name	1 signal	0 signal	FP
17	Burst oversampling	Yes	No	-
18	Continuous oversampling (reserved)	Yes	No	-
19	Safety position actual value sensing	Yes	No	-
20	Velocity calculation mode (only SMC30)	Incremental diff	Flank time meas	-
21	Zero mark tolerance	Yes	No	-
22	Rot pos adapt	Yes	No	-
23	De-select commutation with zero mark	Yes	No	-
24	Commutation with selected zero mark	Yes	No	-
25	Switch off encoder voltage supply during parking	Yes	No	-
27	Extrapolate position values	Yes	No	-
28	Cubic correction	Yes	No	-
29	Phase correction	Yes	No	-
30	Amplitude correction	Yes	No	-
31	Offset correction	Yes	No	-

Notice: A bit-wise configuration is only possible if the corresponding property is also present in r0458.

Note: Re bit 17 (burst oversampling):
- if bit = 1, burst oversampling is switched on.
Re bit 18 (continuous oversampling):
- if bit = 1, continuous oversampling is switched on.
Re bit 19 (Safety position actual value sensing):
- if bit = 1, the Safety position actual value is transferred in the cyclic telegram.
Re bit 20 (speed calculation mode):
- if bit = 1, the speed is calculated via incremental difference without extrapolation.
- if bit = 0, the speed is calculated via edge time measurement with extrapolation. p0453 is effective in this mode.
Re bit 21 (zero mark tolerance):
- if bit = 1, a one-off zero mark distance error is tolerated. In the event of a defect, the fault F3x100/F3x101 does not appear, but alarm A3x400/A3x401 does.
Re bit 22 (rotor position adaptation):
- if bit = 1, the rotor position is corrected automatically. The correction speed is +/-1/4 encoder pulse per zero mark distance.
Re bit 23 (de-select commutation with zero mark):
- The bit should only be set for encoders that have not been adjusted.
Re bit 24 (commutation with selected zero mark):
- if bit = 1, the commutation position is corrected via a selected zero mark.
Re bit 25 (disconnect the encoder power supply on parking):
- if bit = 1, the encoder power supply is switched off on parking (0 V).
- if bit = 0, the encoder power supply is not switched off on parking, it is reduced from 24 V to 5 V.

© Siemens AG 2012 All Rights Reserved

Re bit 27 (extrapolate position values):
- if bit = 1, the extrapolation of the position values is activated.
Re bit 28 (cubic correction);
- if bit = 1, the cubic correction for track A/B sine is activated.
Re bit 29 (phase correction):
- if bit = 1, the phase correction for track A/B sine is activated.
Re bit 30 (amplitude correction):
- if bit = 1, the amplitude correction for track A/B sine is activated.
Re bit 31 (offset correction):
- if bit = 1, the offset correction for track A/B sine is activated.

p0431[0...n] Angular commutation offset / Ang_com offset

VECTOR_G

Can be changed: C2(4)	**Calculated:** -	**Access level:** 3
Data type: FloatingPoint32	**Dynamic index:** EDS, p0140	**Func. diagram:** -
P-Group: Encoder	**Units group:** -	**Unit selection:** -
Not for motor type: -	**Scaling:** -	**Expert list:** 1
Min	**Max**	**Factory setting**
-180.00 [°]	180.00 [°]	0.00 [°]

Description: Sets the angular commutation offset.

Dependency: The value is taken into account in r0094.
Refer to: r0094, r1778

Caution: When the firmware is upgraded from V2.3 to V2.4 or higher, the value must be reduced by 60° if all the following conditions are fulfilled:
- The motor is a synchronous motor (p0300 = 2, 2xx, 4, 4xx).
- The encoder is a resolver (p0404.23 = 1).
- The actual speed value is inverted (p0410.0 = 1).

Notice: The angular commutation offset cannot be generally taken from other drive systems. As a minimum - the sign of the offset determined for SIMODRIVE 611 digital and SIMODRIVE 611 universal must be reversed for SINAMICS (p0431 (SINAMICS) = -p1016 (SIMODRIVE)).

Note: Angular commutation offset, angular difference between electrical position of encoder and flux position.
For p0404.5 = 1 (track C/D) the following applies:
The angular offset in p0431 acts on track A/B, the zero mark on track C/D.
For p0404.6 = 1 (Hall sensor) the following applies:
The angular offset in p0431 acts on track A/B and the zero mark.

p0432[0...n] Gearbox factor, encoder revolutions / Grbx_fact enc_rev

ENC, VECTOR_G

Can be changed: C2(4)	**Calculated:** -	**Access level:** 3
Data type: Integer16	**Dynamic index:** EDS, p0140	**Func. diagram:** -
P-Group: Encoder	**Units group:** -	**Unit selection:** -
Not for motor type: -	**Scaling:** -	**Expert list:** 1
Min	**Max**	**Factory setting**
1	10000	1

Description: Sets the encoder revolutions for the gearbox factor of the encoder evaluation.
The gearbox factor specifies the ratio between the encoder shaft and motor shaft (for motor encoders) or between the encoder shaft and the load.

Dependency: This parameter can only be set for p0402 = 9999.
Refer to: p0402, p0410, p0433

Note: Negative gearbox factors should be implemented with p0410.

© Siemens AG 2012 All Rights Reserved

p0433[0...n] Gearbox factor, motor/load revolutions / Grbx_fact mot_rev

ENC, VECTOR_G

Can be changed: C2(4)	**Calculated:** -	**Access level:** 3
Data type: Integer16	**Dynamic index:** EDS, p0140	**Func. diagram:** -
P-Group: Encoder	**Units group:** -	**Unit selection:** -
Not for motor type: -	**Scaling:** -	**Expert list:** 1
Min	**Max**	**Factory setting**
1	10000	1

Description: Sets the motor and load revolutions for the gearbox factor of the encoder evaluation.

The gearbox factor specifies the ratio between the encoder shaft and motor shaft (for motor encoders) or between the encoder shaft and the load.

Dependency: This parameter can only be set for p0402 = 9999.

Refer to: p0402, p0410, p0432

Note: Negative gearbox factors should be implemented with p0410.

p0434[0...n] Encoder SSI error bit / Enc SSI error bit

ENC, VECTOR_G

Can be changed: C2(4)	**Calculated:** -	**Access level:** 3
Data type: Unsigned16	**Dynamic index:** EDS, p0140	**Func. diagram:** -
P-Group: Encoder	**Units group:** -	**Unit selection:** -
Not for motor type: -	**Scaling:** -	**Expert list:** 1
Min	**Max**	**Factory setting**
0	65535	0

Description: Sets the position and level of the error bit in the SSI protocol.

Notice: The bit may only be positioned before (p0446) or after (p0448) the absolute value in the SSI protocol.

Note: Value = dcba

ba: Position of the error bit in the protocol (0 ... 63).

c: Level (0: Low level, 1: High level).

d: Status of the evaluation (0: Off, 1: On with 1 error bit, 2: On with 2 error bits ... 9: On with 9 error bits).

For several error error bits, the following applies:

- the position specified under ba and the additional bits are assigned increasing consecutively.
- the level set under c applies to all error bits.

Example:

p0434 = 1013

--> The evaluation is switched in and the error bit is at position 13 with a low level.

p0434 = 1113

--> The evaluation is switched in and the error bit is at position 13 with a high level.

p0435[0...n] Encoder SSI alarm bit / Enc SSI alarm bit

ENC, VECTOR_G

Can be changed: C2(4)	**Calculated:** -	**Access level:** 3
Data type: Unsigned16	**Dynamic index:** EDS, p0140	**Func. diagram:** -
P-Group: Encoder	**Units group:** -	**Unit selection:** -
Not for motor type: -	**Scaling:** -	**Expert list:** 1
Min	**Max**	**Factory setting**
0	65535	0

Description: Sets the position and level of the alarm bit in the SSI protocol.

Notice: The bit may only be positioned before (p0446) or after (p0448) the absolute value in the SSI protocol.

Note: Value = dcba

ba: Position of the alarm bit in protocol (0 ... 63).

c: Level (0: Low level, 1: High level).

d: State of the evaluation (0: Off, 1: On).

© Siemens AG 2012 All Rights Reserved

Example:
p0435 = 1014
--> The evaluation is switched in and the alarm bit is at position 14 with a low level.
p0435 = 1114
--> The evaluation is switched in and the alarm bit is at position 14 with a high level.

p0436[0...n] Encoder SSI parity bit / Enc SSI parity bit

ENC, VECTOR_G

Can be changed: C2(4)	**Calculated:** -	**Access level:** 3
Data type: Unsigned16	**Dynamic index:** EDS, p0140	**Func. diagram:** -
P-Group: Encoder	**Units group:** -	**Unit selection:** -
Not for motor type: -	**Scaling:** -	**Expert list:** 1
Min	**Max**	**Factory setting**
0	65535	0

Description: Sets the position and parity of the parity bit in the SSI protocol.

Notice: The bit may only be positioned before (p0446) or after (p0448) the absolute value in the SSI protocol.

Note: Value = dcba
ba: Position of the parity bit in the protocol (0 ... 63).
c: Parity (0: even, 1: uneven).
d: State of the evaluation (0: Off, 1: On).
Example:
p0436 = 1015
--> The evaluation is switched in and the parity bit is at position 15 with even parity.
p0436 = 1115
--> The evaluation is switched in and the parity bit is at position 15 with uneven parity.

p0437[0...n] Sensor Module configuration extended / SM config ext

ENC, VECTOR_G

Can be changed: C2(4)	**Calculated:** -	**Access level:** 3
Data type: Unsigned32	**Dynamic index:** EDS, p0140	**Func. diagram:** -
P-Group: Encoder	**Units group:** -	**Unit selection:** -
Not for motor type: -	**Scaling:** -	**Expert list:** 1
Min	**Max**	**Factory setting**
-	-	0011 0000 0000 0000 0000 1000 0000 0000 bin

Description: Sets the extended configuration of the Sensor Module.

Bit field:

Bit	Signal name	1 signal	0 signal	FP
00	Data logger	Yes	No	-
01	Zero mark edge detection	Yes	No	-
02	Correction position actual value XIST1	Yes	No	-
04	Edge evaluation bit 0	Yes	No	-
05	Edge evaluation bit 1	Yes	No	-
06	Freeze the speed actual value for dn/dt errors	Yes	No	-
07	Accumulate uncorrected encoder pulses	Yes	No	-
11	Fault handling after PROFIdrive	Yes	No	-
12	Activate additional messages	Yes	No	-
13	Support absolute position for incremental encoder	Yes	No	4750
25	Deselect monitoring multiturn representation in Gx_XIST2	Yes	No	-
26	Deselect track monitoring	Yes	No	-
28	EnDat linear encoder monitoring incremental/absolute	Yes	No	-
29	EnDat encoder initialization with high accuracy	Yes	No	-
31	Analog unipolar track monitoring	Yes	No	-

Dependency: Refer to: p0430, r0459

© Siemens AG 2012 All Rights Reserved

Note: A value of zero is displayed if an encoder is not present.

Re bit 00:

When the data logger (trace) is activated, in the case of a fault, data before and after the event are recorded (traced) and saved in files on the non-volatile memory medium. Experts can then evaluate this data.

Re bit 01:

If bit = 0, the zero mark is evaluated by ANDing tracks A and B and the zero mark.

For bit = 1, the zero mark is evaluated depending on the direction of rotation detected. For a positive direction of rotation, the positive edge of the zero mark is considered and for a negative direction of rotation, the negative edge of the zero mark.

Re bit 02:

If the bit is set, in the event of a deviation less than the tolerance window for the zero mark (p4681, p4682), the pulses per revolution are corrected. If the bit is not set, encoder fault F3x131 is triggered.

Re Bit 04 and Bit 05:

The actual hardware only supports 1x or 4x signal evaluation.

Bit 5/4 = 0/0: Signal evaluation per period, 4x.

Bit 5/4 = 1/0: Illegal setting.

Bit 5/4 = 0/1: Signal evaluation per period, 1x.

Bit 5/4 = 1/1: Illegal setting.

Re bit 06:

If the function is active, when dn/dt monitoring responds, the speed actual value is internally frozen for a time equivalent to two current controller clock cycles. The rotor position continues to be integrated. The actual value is then re-enabled after this time has expired.

Re bit 07:

If the bit is set, the encoder pulses which have not been corrected are added to p4688 at the zero mark.

Re bit 11:

If the bit is set, the Sensor Module checks within a certain time grid whether the fault cause is still present. This enables the Sensor Module to switch from the fault state to the operating state and provide valid actual values automatically. The faults are displayed until the user acknowledges them.

Re bit 12:

Additional fault messages can be activated for extended fault diagnostics.

Re bit 13:

When the bit is set, for an incremental encoder with zero mark, the absolute value in Gn_XIST2 can be requested via Gn_STW.13.

Re bit 20:

If the bit is set, the bandwidth of the analog filter for SMx10 (resolver) and SMx20 (sin/cos encoder) can be set via p4660.

Re bit 26:

Track monitoring is de-activated for the square-wave encoders when the bit is set, even if the monitoring function is selected in p0405.2.

Re bit 28:

Monitoring of the difference between incremental and absolute position in the case of linear encoders.

Re bit 29:

When the bit is set, the EnDat encoder is initialized under a certain speed and, therefore, with high accuracy. If initialization at a higher speed is requested, fault F31151, F32151, or F33151 is output.

Re bit 31:

When monitoring is active, the levels of the individual track signals and the corresponding inverted track signals are monitored separately.

© Siemens AG 2012 All Rights Reserved

p0437[0...n] Sensor Module configuration extended / SM config ext

ENC (Lin_enc)

Can be changed: C2(4)	**Calculated:** -	**Access level:** 3
Data type: Unsigned32	**Dynamic index:** EDS, p0140	**Func. diagram:** -
P-Group: Encoder	**Units group:** -	**Unit selection:** -
Not for motor type: -	**Scaling:** -	**Expert list:** 1
Min	**Max**	**Factory setting**
-	-	0011 0000 0000 0000 0000 1000 0000 0000 bin

Description: Sets the extended configuration of the Sensor Module.

Bit field:

Bit	Signal name	1 signal	0 signal	FP
00	Data logger	Yes	No	-
01	Zero mark edge detection	Yes	No	-
02	Correction position actual value XIST1	Yes	No	-
04	Edge evaluation bit 0	Yes	No	-
05	Edge evaluation bit 1	Yes	No	-
06	Freeze the speed actual value for dn/dt errors	Yes	No	-
07	Accumulate uncorrected encoder pulses	Yes	No	-
11	Fault handling after PROFIdrive	Yes	No	-
12	Activate additional messages	Yes	No	-
13	Support absolute position for incremental encoder	Yes	No	4750
25	Deselect monitoring multiturn representation in Gx_XIST2	Yes	No	-
26	Deselect track monitoring	Yes	No	-
28	EnDat linear encoder monitoring incremental/absolute	Yes	No	-
29	EnDat encoder initialization with high accuracy	Yes	No	-
31	Analog unipolar track monitoring	Yes	No	-

Dependency: Refer to: p0430, r0459

Note: A value of zero is displayed if an encoder is not present.

Re bit 00:

When the data logger (trace) is activated, in the case of a fault, data before and after the event are recorded (traced) and saved in files on the non-volatile memory medium. Experts can then evaluate this data.

Re bit 01:

If bit = 0, the zero mark is evaluated by ANDing tracks A and B and the zero mark.

For bit = 1, the zero mark is evaluated depending on the direction detected. For a positive direction, the positive edge of the zero mark is considered and for a negative direction, the negative edge of the zero mark.

Re bit 02:

If the bit is set, in the event of a deviation less than the tolerance window for the zero mark (p4681, p4682), the pulses per revolution are corrected. If the bit is not set, encoder fault F3x131 is triggered.

Re Bit 04 and Bit 05:

Bit 5/4 = 0/0: Signal evaluation per period, 4x.

Bit 5/4 = 1/0: Signal evaluation per period, 4x.

Bit 5/4 = 0/1: Signal evaluation per period, 1x.

Bit 5/4 = 1/1: Illegal setting.

Re bit 06:

If the function is active, when dn/dt monitoring responds, the velocity actual value is internally frozen for a time equivalent to two current controller clock cycles. The rotor position continues to be integrated. The actual value is then re-enabled after this time has expired.

Re bit 07:

If the bit is set, the encoder pulses detected as faulty between two zero marks are accumulated (p4688).

Re bit 29:

When the bit is set, the EnDat encoder is initialized under a certain velocity and, therefore, with high accuracy. If initialization at a higher velocity is requested, fault F31151, F32151, or F33151 is output.

© Siemens AG 2012 All Rights Reserved

Re bit 31:

When monitoring is active, the levels of the individual track signals and the corresponding inverted track signals are monitored separately.

p0438[0...n] Squarewave encoder filter time / Enc t_filt

ENC, VECTOR_G	**Can be changed:** C2(4)	**Calculated:** -	**Access level:** 3
	Data type: FloatingPoint32	**Dynamic index:** EDS, p0140	**Func. diagram:** -
	P-Group: Encoder	**Units group:** -	**Unit selection:** -
	Not for motor type: -	**Scaling:** -	**Expert list:** 1
	Min	**Max**	**Factory setting**
	0.00 [µs]	100.00 [µs]	0.64 [µs]

Description: Sets the filter time for a squarewave encoder.

The hardware of the squarewave encoder only supports the following values:

0: No filtering

0.04 µs

0.64 µs

2.56 µs

10.24 µs

20.48 µs

Dependency: Refer to: r0452

Notice: If the filter time is too long, the track signals A/B/R may be suppressed and the appropriate messages output.

Note: The most suitable filter time depends on the number of pulses and maximum speed of the square-wave encoder.

The filter time is automatically corrected to the next value when entering a non-specified value. In this case, no message is output.

The effective filter time is displayed in r0452.

p0439[0...n] Encoder ramp-up time / Enc ramp-up time

ENC, VECTOR_G	**Can be changed:** C2(4)	**Calculated:** -	**Access level:** 3
	Data type: Unsigned16	**Dynamic index:** EDS, p0140	**Func. diagram:** -
	P-Group: Encoder	**Units group:** -	**Unit selection:** -
	Not for motor type: -	**Scaling:** -	**Expert list:** 1
	Min	**Max**	**Factory setting**
	0 [ms]	65535 [ms]	0 [ms]

Description: Sets the ramp-up time for the encoder.

The encoder supplies stable track signals once this time has elapsed.

Caution: This parameter is automatically pre-set for encoders from the encoder list (p0400).

p0440[0...n] Copy encoder serial number / Copy enc ser_no

ENC, VECTOR_G	**Can be changed:** C2(4)	**Calculated:** -	**Access level:** 3
	Data type: Integer16	**Dynamic index:** EDS, p0140	**Func. diagram:** -
	P-Group: Encoder	**Units group:** -	**Unit selection:** -
	Not for motor type: -	**Scaling:** -	**Expert list:** 1
	Min	**Max**	**Factory setting**
	0	1	0

Description: Copies the actual serial number of the encoder belonging to this Encoder Data Set (EDS) to p0441 ... p0445.

Example:

For p0440[0] = 1, the serial number of the encoder belonging EDS0 is copied to p0441[0] ... p0445[0].

Value:
0: No action
1: Transfer serial number

Dependency: Refer to: p0441, p0442, p0443, p0444, p0445, r0460, r0461, r0462, r0463, r0464, p1990

Note: For encoders with serial number, encoder replacement is monitored in order to request angular commutation calibration (adjustment) for motor encoders and absolute calibration for direct measuring systems with absolute value data. The serial number, which from then onwards is used for monitoring purposes, can be transferred using p0440.

© Siemens AG 2012 All Rights Reserved

In the following cases, copying is automatically started in the following cases:
1.) When commissioning 1FT6, 1FK6, 1FK7 motors.
2.) When writing into p0431.
3.) For p1990 = 1.
p0440 is automatically set to 0 when the copying has been completed.
In order to permanently accept the copied values, it is necessary to save in a non-volatile fashion (p0977).

p0441[0...n] Encoder commissioning serial number part 1 / Enc comm ser_no 1

ENC, VECTOR_G	**Can be changed:** C2(4)	**Calculated:** CALC_MOD_ALL	**Access level:** 4
	Data type: Unsigned32	**Dynamic index:** EDS, p0140	**Func. diagram:** -
	P-Group: Encoder	**Units group:** -	**Unit selection:** -
	Not for motor type: -	**Scaling:** -	**Expert list:** 1
	Min	**Max**	**Factory setting**
	0000 hex	FFFF FFFF hex	0000 hex

Description: Serial number part 1 of the encoder for the commissioning.
Dependency: Refer to: p0440, p0442, p0443, p0444, p0445, r0460, r0461, r0462, r0463, r0464
Note: A value of zero is displayed if an encoder is not present.

p0442[0...n] Encoder commissioning serial number part 2 / Enc comm ser_no 2

ENC, VECTOR_G	**Can be changed:** C2(4)	**Calculated:** CALC_MOD_ALL	**Access level:** 4
	Data type: Unsigned32	**Dynamic index:** EDS, p0140	**Func. diagram:** -
	P-Group: Encoder	**Units group:** -	**Unit selection:** -
	Not for motor type: -	**Scaling:** -	**Expert list:** 1
	Min	**Max**	**Factory setting**
	0000 hex	FFFF FFFF hex	0000 hex

Description: Serial number part 2 of the encoder for the commissioning.
Dependency: Refer to: p0440, p0441, p0443, p0444, p0445, r0460, r0461, r0462, r0463, r0464
Note: A value of zero is displayed if an encoder is not present.

p0443[0...n] Encoder commissioning serial number part 3 / Enc comm ser_no 3

ENC, VECTOR_G	**Can be changed:** C2(4)	**Calculated:** CALC_MOD_ALL	**Access level:** 4
	Data type: Unsigned32	**Dynamic index:** EDS, p0140	**Func. diagram:** -
	P-Group: Encoder	**Units group:** -	**Unit selection:** -
	Not for motor type: -	**Scaling:** -	**Expert list:** 1
	Min	**Max**	**Factory setting**
	0000 hex	FFFF FFFF hex	0000 hex

Description: Serial number part 3 of the encoder for the commissioning.
Dependency: Refer to: p0440, p0441, p0442, p0444, p0445, r0460, r0461, r0462, r0463, r0464
Note: A value of zero is displayed if an encoder is not present.

p0444[0...n] Encoder commissioning serial number part 4 / Enc comm ser_no 4

ENC, VECTOR_G	**Can be changed:** C2(4)	**Calculated:** CALC_MOD_ALL	**Access level:** 4
	Data type: Unsigned32	**Dynamic index:** EDS, p0140	**Func. diagram:** -
	P-Group: Encoder	**Units group:** -	**Unit selection:** -
	Not for motor type: -	**Scaling:** -	**Expert list:** 1
	Min	**Max**	**Factory setting**
	0000 hex	FFFF FFFF hex	0000 hex

Description: Serial number part 4 of the encoder for the commissioning.
Dependency: Refer to: p0440, p0441, p0442, p0443, p0445, r0460, r0461, r0462, r0463, r0464
Note: A value of zero is displayed if an encoder is not present.

© Siemens AG 2012 All Rights Reserved

p0445[0...n] Encoder commissioning serial number part 5 / Enc comm ser_no 5

ENC, VECTOR_G	**Can be changed:** C2(4)	**Calculated:** CALC_MOD_ALL	**Access level:** 4
	Data type: Unsigned32	**Dynamic index:** EDS, p0140	**Func. diagram:** -
	P-Group: Encoder	**Units group:** -	**Unit selection:** -
	Not for motor type: -	**Scaling:** -	**Expert list:** 1
	Min	**Max**	**Factory setting**
	0000 hex	FFFF FFFF hex	0000 hex

Description: Serial number part 5 of the encoder for the commissioning.

Dependency: Refer to: p0440, p0441, p0442, p0443, p0444, r0460, r0461, r0462, r0463, r0464

Note: A value of zero is displayed if an encoder is not present.

p0446[0...n] Encoder SSI number of bits before the absolute value / Enc SSI bit before

ENC, VECTOR_G	**Can be changed:** C2(4)	**Calculated:** -	**Access level:** 3
	Data type: Unsigned16	**Dynamic index:** EDS, p0140	**Func. diagram:** -
	P-Group: Encoder	**Units group:** -	**Unit selection:** -
	Not for motor type: -	**Scaling:** -	**Expert list:** 1
	Min	**Max**	**Factory setting**
	0	65535	0

Description: Sets the number of bits before the absolute value in the SSI protocol.

Caution: This parameter is automatically pre-set for encoders from the encoder list (p0400). When selecting a catalog encoder, this parameter cannot be changed (write protection). Information in p0400 should be carefully observed when removing write protection.

Note: For example, error bit, alarm bit or parity bit can be positioned at these bits.

p0447[0...n] Encoder SSI number of bits absolute value / Enc SSI bit val

ENC, VECTOR_G	**Can be changed:** C2(4)	**Calculated:** -	**Access level:** 3
	Data type: Unsigned16	**Dynamic index:** EDS, p0140	**Func. diagram:** -
	P-Group: Encoder	**Units group:** -	**Unit selection:** -
	Not for motor type: -	**Scaling:** -	**Expert list:** 1
	Min	**Max**	**Factory setting**
	0	65535	25

Description: Sets the number of bits for the absolute value in the SSI protocol.

Caution: This parameter is automatically pre-set for encoders from the encoder list (p0400). When selecting a catalog encoder, this parameter cannot be changed (write protection). Information in p0400 should be carefully observed when removing write protection.

p0448[0...n] Encoder SSI number of bits after the absolute value / Enc SSI bit after

ENC, VECTOR_G	**Can be changed:** C2(4)	**Calculated:** -	**Access level:** 3
	Data type: Unsigned16	**Dynamic index:** EDS, p0140	**Func. diagram:** -
	P-Group: Encoder	**Units group:** -	**Unit selection:** -
	Not for motor type: -	**Scaling:** -	**Expert list:** 1
	Min	**Max**	**Factory setting**
	0	65535	0

Description: Sets the number of bits after the absolute value in the SSI protocol.

Caution: This parameter is automatically pre-set for encoders from the encoder list (p0400). When selecting a catalog encoder, this parameter cannot be changed (write protection). Information in p0400 should be carefully observed when removing write protection.

Note: For example, error bit, alarm bit or parity bit can be positioned at these bits.

© Siemens AG 2012 All Rights Reserved

p0449[0...n] Encoder SSI number of bits, filler bits / Enc SSI fill bits

ENC, VECTOR_G	**Can be changed:** C2(4)	**Calculated:** -	**Access level:** 3
	Data type: Unsigned16	**Dynamic index:** EDS, p0140	**Func. diagram:** -
	P-Group: Encoder	**Units group:** -	**Unit selection:** -
	Not for motor type: -	**Scaling:** -	**Expert list:** 1
	Min	**Max**	**Factory setting**
	0	65535	1

Description: Sets the number of filler bits for double absolute value transfer in the SSI protocol.

Dependency: Refer to: p0429

Caution: This parameter is automatically pre-set for encoders from the encoder list (p0400). When selecting a catalog encoder, this parameter cannot be changed (write protection). Information in p0400 should be carefully observed when removing write protection.

Note: This parameter is only of significance for p0429.2 = 1.

r0451[0...2] Commutation angle factor / Enc commut_factor

VECTOR_G	**Can be changed:** -	**Calculated:** -	**Access level:** 3
	Data type: Unsigned16	**Dynamic index:** -	**Func. diagram:** 4710
	P-Group: Encoder	**Units group:** -	**Unit selection:** -
	Not for motor type: -	**Scaling:** -	**Expert list:** 1
	Min	**Max**	**Factory setting**
	-	-	-

Description: Displays the relationship between the electrical and mechanical pole positions.

Index: [0] = Encoder 1
[1] = Encoder 2
[2] = Encoder 3

Note: A value of zero is displayed if an encoder is not present.

r0452 Squarewave encoder filter time display / Enc t_filt displ

ENC	**Can be changed:** -	**Calculated:** -	**Access level:** 3
	Data type: FloatingPoint32	**Dynamic index:** -	**Func. diagram:** -
	P-Group: Encoder	**Units group:** -	**Unit selection:** -
	Not for motor type: -	**Scaling:** -	**Expert list:** 1
	Min	**Max**	**Factory setting**
	- [µs]	- [µs]	- [µs]

Description: Displays the effective filter time for a squarewave encoder.
The filter time is set using p0438.

Dependency: Refer to: p0438

Note: A value of zero is displayed if an encoder is not present.

r0452[0...2] Squarewave encoder filter time display / Enc t_filt displ

VECTOR_G	**Can be changed:** -	**Calculated:** -	**Access level:** 3
	Data type: FloatingPoint32	**Dynamic index:** -	**Func. diagram:** -
	P-Group: Encoder	**Units group:** -	**Unit selection:** -
	Not for motor type: -	**Scaling:** -	**Expert list:** 1
	Min	**Max**	**Factory setting**
	- [µs]	- [µs]	- [µs]

Description: Displays the effective filter time for a squarewave encoder.
The filter time is set using p0438.

Index: [0] = Encoder 1
[1] = Encoder 2
[2] = Encoder 3

Dependency: Refer to: p0438

© Siemens AG 2012 All Rights Reserved

Note: A value of zero is displayed if an encoder is not present.

p0453[0...n] Pulse encoder evaluation zero speed measuring time / Enc_ev z 0 t_meas

ENC, VECTOR_G

Can be changed: C2(4)	**Calculated:** -	**Access level:** 3
Data type: FloatingPoint32	**Dynamic index:** EDS, p0140	**Func. diagram:** -
P-Group: Encoder	**Units group:** -	**Unit selection:** -
Not for motor type: -	**Scaling:** -	**Expert list:** 1
Min	**Max**	**Factory setting**
0.10 [ms]	10000.00 [ms]	1000.00 [ms]

Description: Sets the measuring time for evaluating zero speed.
If no pulses are detected from track A/B during this time, a speed actual value of zero is output.

Dependency: Refer to: r0452

Note: This function is required for slow-running motors so that actual speeds close to zero can be output correctly.

r0455 Encoder configuration recognized / Enc config act

ENC

Can be changed: -	**Calculated:** -	**Access level:** 3
Data type: Unsigned32	**Dynamic index:** -	**Func. diagram:** -
P-Group: Encoder	**Units group:** -	**Unit selection:** -
Not for motor type: -	**Scaling:** -	**Expert list:** 1
Min	**Max**	**Factory setting**
-	-	-

Description: Displays the detected encoder configuration.
In this case, the encoder must automatically support the function (e.g. encoder with EnDat interface).

Bit field:

Bit	Signal name	1 signal	0 signal	FP
00	Linear encoder	Yes	No	-
01	Absolute encoder	Yes	No	-
02	Multiturn encoder	Yes	No	-
03	Track A/B sq-wave	Yes	No	-
04	Track A/B sine	Yes	No	-
05	Track C/D	Yes	No	-
06	Hall sensor	Yes	No	-
08	EnDat encoder	Yes	No	-
09	SSI encoder	Yes	No	-
10	DRIVE-CLiQ encoder	Yes	No	-
11	Digital encoder	Yes	No	-
12	Equidistant zero mark	Yes	No	-
13	Irregular zero mark	Yes	No	-
14	Distance-coded zero mark	Yes	No	-
15	Commutation with zero mark (not ASM)	Yes	No	-
16	Acceleration	Yes	No	-
17	Track A/B analog	Yes	No	-
20	Voltage level 5 V	Yes	No	-
21	Voltage level 24 V	Yes	No	-
22	Remote sense (only SMC30)	Yes	No	-
23	Resolver excit.	Yes	No	-

Dependency: Refer to: p0404

Note: ZM: Zero mark
This parameter is only used for diagnostics.
A value of zero is displayed if an encoder is not present.
Re bit 20, 21 (voltage level 5 V, voltage level 24 V):
The voltage level cannot be detected. Therefore, these bits are always set to 0.

© Siemens AG 2012 All Rights Reserved

r0455[0...2] Encoder configuration recognized / Enc config act

VECTOR_G

Can be changed: -	**Calculated:** -	**Access level:** 3
Data type: Unsigned32	**Dynamic index:** -	**Func. diagram:** -
P-Group: Encoder	**Units group:** -	**Unit selection:** -
Not for motor type: -	**Scaling:** -	**Expert list:** 1
Min	**Max**	**Factory setting**
-	-	-

Description: Displays the detected encoder configuration.
In this case, the encoder must automatically support the function (e.g. encoder with EnDat interface).

Index: [0] = Encoder 1
[1] = Encoder 2
[2] = Encoder 3

Bit field:

Bit	Signal name	1 signal	0 signal	FP
00	Linear encoder	Yes	No	-
01	Absolute encoder	Yes	No	-
02	Multiturn encoder	Yes	No	-
03	Track A/B sq-wave	Yes	No	-
04	Track A/B sine	Yes	No	-
05	Track C/D	Yes	No	-
06	Hall sensor	Yes	No	-
08	EnDat encoder	Yes	No	-
09	SSI encoder	Yes	No	-
10	DRIVE-CLiQ encoder	Yes	No	-
11	Digital encoder	Yes	No	-
12	Equidistant zero mark	Yes	No	-
13	Irregular zero mark	Yes	No	-
14	Distance-coded zero mark	Yes	No	-
15	Commutation with zero mark (not ASM)	Yes	No	-
16	Acceleration	Yes	No	-
17	Track A/B analog	Yes	No	-
20	Voltage level 5 V	Yes	No	-
21	Voltage level 24 V	Yes	No	-
22	Remote sense (only SMC30)	Yes	No	-
23	Resolver excit.	Yes	No	-

Dependency: Refer to: p0404

Note: ZM: Zero mark
This parameter is only used for diagnostics.
A value of zero is displayed if an encoder is not present.
Re bit 20, 21 (voltage level 5 V, voltage level 24 V):
The voltage level cannot be detected. Therefore, these bits are always set to 0.

r0456 Encoder configuration supported / Enc_config supp

ENC

Can be changed: -	**Calculated:** -	**Access level:** 3
Data type: Unsigned32	**Dynamic index:** -	**Func. diagram:** -
P-Group: Encoder	**Units group:** -	**Unit selection:** -
Not for motor type: -	**Scaling:** -	**Expert list:** 1
Min	**Max**	**Factory setting**
-	-	-

Description: Displays the encoder configuration supported by the Sensor Module.

Bit field:

Bit	Signal name	1 signal	0 signal	FP
00	Linear encoder	Yes	No	-
01	Absolute encoder	Yes	No	-
02	Multiturn encoder	Yes	No	-
03	Track A/B sq-wave	Yes	No	-
04	Track A/B sine	Yes	No	-
05	Track C/D	Yes	No	-

© Siemens AG 2012 All Rights Reserved

06	Hall sensor	Yes	No	-
08	EnDat encoder	Yes	No	-
09	SSI encoder	Yes	No	-
10	DRIVE-CLiQ encoder	Yes	No	-
11	Digital encoder	Yes	No	-
12	Equidistant zero mark	Yes	No	-
13	Irregular zero mark	Yes	No	-
14	Distance-coded zero mark	Yes	No	-
15	Commutation with zero mark (not ASM)	Yes	No	-
16	Acceleration	Yes	No	-
17	Track A/B analog	Yes	No	-
20	Voltage level 5 V	Yes	No	-
21	Voltage level 24 V	Yes	No	-
22	Remote sense (only SMC30)	Yes	No	-
23	Resolver excit.	Yes	No	-

Dependency: Refer to: p0404

Note: ZM: Zero mark
This parameter is only used for diagnostics.
A value of zero is displayed if an encoder is not present.

r0456[0...2] Encoder configuration supported / Enc_config supp

VECTOR_G

Can be changed: -	**Calculated:** -	**Access level:** 3
Data type: Unsigned32	**Dynamic index:** -	**Func. diagram:** -
P-Group: Encoder	**Units group:** -	**Unit selection:** -
Not for motor type: -	**Scaling:** -	**Expert list:** 1
Min	**Max**	**Factory setting**
-	-	-

Description: Displays the encoder configuration supported by the Sensor Module.

Index: [0] = Encoder 1
[1] = Encoder 2
[2] = Encoder 3

Bit field:

Bit	Signal name	1 signal	0 signal	FP
00	Linear encoder	Yes	No	-
01	Absolute encoder	Yes	No	-
02	Multiturn encoder	Yes	No	-
03	Track A/B sq-wave	Yes	No	-
04	Track A/B sine	Yes	No	-
05	Track C/D	Yes	No	-
06	Hall sensor	Yes	No	-
08	EnDat encoder	Yes	No	-
09	SSI encoder	Yes	No	-
10	DRIVE-CLiQ encoder	Yes	No	-
11	Digital encoder	Yes	No	-
12	Equidistant zero mark	Yes	No	-
13	Irregular zero mark	Yes	No	-
14	Distance-coded zero mark	Yes	No	-
15	Commutation with zero mark (not ASM)	Yes	No	-
16	Acceleration	Yes	No	-
17	Track A/B analog	Yes	No	-
20	Voltage level 5 V	Yes	No	-
21	Voltage level 24 V	Yes	No	-
22	Remote sense (only SMC30)	Yes	No	-
23	Resolver excit.	Yes	No	-

Dependency: Refer to: p0404

Note: ZM: Zero mark
This parameter is only used for diagnostics.
A value of zero is displayed if an encoder is not present.

© Siemens AG 2012 All Rights Reserved

r0458 Sensor Module properties / SM properties

ENC

Can be changed: -	**Calculated:** -	**Access level:** 3
Data type: Unsigned32	**Dynamic index:** -	**Func. diagram:** 4704
P-Group: Encoder	**Units group:** -	**Unit selection:** -
Not for motor type: -	**Scaling:** -	**Expert list:** 1
Min	**Max**	**Factory setting**
-	-	-

Description: Sets the Sensor Module configuration.

Bit field:

Bit	Signal name	1 signal	0 signal	FP
00	Encoder data available	Yes	No	-
01	Motor data available	Yes	No	-
02	Temperature sensor connection available	Yes	No	-
03	Connection for PTC for motor with DRIVE-CLiQ also available	Yes	No	-
04	Module temperature available	Yes	No	-
05	Absolute encoder p0408/p0421, no power of 2	Yes	No	-
06	Sensor Module permits parking/unparking	Yes	No	-
07	Hall sensor can be combined with actual value inversion	Yes	No	-
08	Evaluation through several temperature channels possible	Yes	No	-
09	Encoder fault and its associated information available	Yes	No	-
10	Speed diagnostics in the Sensor Module	Yes	No	-
11	Configuring without park state possible	Yes	No	-
12	Extended functions available	Yes	No	-
13	Extended encoder fault handling	Yes	No	-
14	Extended singleturn/multiturn information available	Yes	No	-
15	Valuation figures available	Yes	No	-
16	Pole position identification	Yes	No	-
17	Burst oversampling	Yes	No	-
18	Continuous oversampling	Yes	No	-
19	Safety position actual value sensing	Yes	No	-
20	Extended speed calculation being used (only SMC30)	Yes	No	-
21	Zero mark tolerance	Yes	No	-
22	Rot pos adapt	Yes	No	-
23	Commutation with zero mark can be de-selected	Yes	No	-
24	Commutation with selected zero mark	Yes	No	-
25	Disconnection of encoder power supply on parking supported	Yes	No	-
26	Parking with temperature evaluation	Yes	No	-
27	SSI position value extrapolation	Yes	No	-
28	Cubic correction	Yes	No	-
29	Phase correction	Yes	No	-
30	Amplitude correction	Yes	No	-
31	Offset correction	Yes	No	-

Dependency: Refer to: p0437, p0600, p0601

Note: A value of zero is displayed if an encoder is not present.

Re bit 11:

When the property is set, the following parameters can be changed without the actual value in the encoder interface becoming invalid (state r0481.14 = 1 "parking encoder active"):

p0314, p0315, p0430, p0431, p0441, p0442, p0443, p0444, p0445

Re bit 12:

The extended functions can be configured using p0437.

© Siemens AG 2012 All Rights Reserved

Re bit 13:
Encoder faults can be acknowledged via Gn_STW.15.
Re bit 14:
Only for internal Siemens use.
Re bit 23:
When the property is set, commutation with zero mark can be de-selected using p0430.23.
Re bit 24:
If the property is set, commutation to the selected zero mark can be carried out.

r0458 Sensor Module properties / SM properties

ENC (Lin_enc)

Can be changed: -	**Calculated:** -	**Access level:** 3
Data type: Unsigned32	**Dynamic index:** -	**Func. diagram:** 4704
P-Group: Encoder	**Units group:** -	**Unit selection:** -
Not for motor type: -	**Scaling:** -	**Expert list:** 1
Min	**Max**	**Factory setting**
-	-	-

Description: Sets the Sensor Module configuration.

Bit field:

Bit	Signal name	1 signal	0 signal	FP
00	Encoder data available	Yes	No	-
01	Motor data available	Yes	No	-
02	Temperature sensor connection available	Yes	No	-
03	Connection for PTC for motor with DRIVE-CLiQ also available	Yes	No	-
04	Module temperature available	Yes	No	-
05	Absolute encoder p0408/p0421, no power of 2	Yes	No	-
06	Sensor Module permits parking/unparking	Yes	No	-
07	Hall sensor can be combined with actual value inversion	Yes	No	-
08	Evaluation through several temperature channels possible	Yes	No	-
09	Encoder fault and its associated information available	Yes	No	-
10	Velocity diagnostics in the Sensor Module	Yes	No	-
11	Configuring without park state possible	Yes	No	-
12	Extended functions available	Yes	No	-
13	Extended encoder fault handling	Yes	No	-
14	Extended singleturn/multiturn information available	Yes	No	-
15	Valuation figures available	Yes	No	-
16	Pole position identification	Yes	No	-
17	Burst oversampling	Yes	No	-
18	Continuous oversampling	Yes	No	-
19	Safety position actual value sensing	Yes	No	-
20	Extended velocity calculation available (only SMC30)	Yes	No	-
21	Zero mark tolerance	Yes	No	-
22	Rot pos adapt	Yes	No	-
23	Commutation with zero mark can be de-selected	Yes	No	-
24	Commutation with selected zero mark	Yes	No	-
25	Disconnection of encoder power supply on parking supported	Yes	No	-
26	Parking with temperature evaluation	Yes	No	-
27	SSI position value extrapolation	Yes	No	-
28	Cubic correction	Yes	No	-
29	Phase correction	Yes	No	-
30	Amplitude correction	Yes	No	-
31	Offset correction	Yes	No	-

© Siemens AG 2012 All Rights Reserved

Dependency: Refer to: p0437, p0600, p0601

Note: A value of zero is displayed if an encoder is not present.

Re bit 11:

When the property is set, the following parameters can be changed without the actual value in the encoder interface becoming invalid (state r0481.14 = 1 "parking encoder active"):

p0314, p0315, p0430, p0431, p0441, p0442, p0443, p0444, p0445

Re bit 12:

The extended functions can be configured using p0437.

Re bit 13:

Encoder faults can be acknowledged via Gn_STW.15.

Re bit 14:

Only for internal Siemens use.

Re bit 23:

When the property is set, commutation with zero mark can be de-selected using p0430.23.

Re bit 24:

If the property is set, commutation to the selected zero mark can be carried out.

r0458[0...2] Sensor Module properties / SM properties

VECTOR_G

Can be changed: -	**Calculated:** -	**Access level:** 3
Data type: Unsigned32	**Dynamic index:** -	**Func. diagram:** 4704
P-Group: Encoder	**Units group:** -	**Unit selection:** -
Not for motor type: -	**Scaling:** -	**Expert list:** 1
Min	**Max**	**Factory setting**
-	-	-

Description: Sets the Sensor Module configuration.

Index:
[0] = Encoder 1
[1] = Encoder 2
[2] = Encoder 3

Bit field:

Bit	Signal name	1 signal	0 signal	FP
00	Encoder data available	Yes	No	-
01	Motor data available	Yes	No	-
02	Temperature sensor connection available	Yes	No	-
03	Connection for PTC for motor with DRIVE-CLiQ also available	Yes	No	-
04	Module temperature available	Yes	No	-
05	Absolute encoder p0408/p0421, no power of 2	Yes	No	-
06	Sensor Module permits parking/unparking	Yes	No	-
07	Hall sensor can be combined with actual value inversion	Yes	No	-
08	Evaluation through several temperature channels possible	Yes	No	-
09	Encoder fault and its associated information available	Yes	No	-
10	Speed diagnostics in the Sensor Module	Yes	No	-
11	Configuring without park state possible	Yes	No	-
12	Extended functions available	Yes	No	-
13	Extended encoder fault handling	Yes	No	-
14	Extended singleturn/multiturn information available	Yes	No	-
15	Valuation figures available	Yes	No	-
16	Pole position identification	Yes	No	-
17	Burst oversampling	Yes	No	-
18	Continuous oversampling	Yes	No	-
19	Safety position actual value sensing	Yes	No	-
20	Extended speed calculation being used (only SMC30)	Yes	No	-
21	Zero mark tolerance	Yes	No	-

© Siemens AG 2012 All Rights Reserved

22	Rot pos adapt	Yes	No	-
23	Commutation with zero mark can be de-selected	Yes	No	-
24	Commutation with selected zero mark	Yes	No	-
25	Disconnection of encoder power supply on parking supported	Yes	No	-
26	Parking with temperature evaluation	Yes	No	-
27	SSI position value extrapolation	Yes	No	-
28	Cubic correction	Yes	No	-
29	Phase correction	Yes	No	-
30	Amplitude correction	Yes	No	-
31	Offset correction	Yes	No	-

Dependency: Refer to: p0437, p0600, p0601

Note: A value of zero is displayed if an encoder is not present.

Re bit 11:

When the property is set, the following parameters can be changed without the actual value in the encoder interface becoming invalid (state r0481.14 = 1 "parking encoder active"):

p0314, p0315, p0430, p0431, p0441, p0442, p0443, p0444, p0445

Re bit 12:

The extended functions can be configured using p0437.

Re bit 13:

Encoder faults can be acknowledged via Gn_STW.15.

Re bit 14:

Only for internal Siemens use.

Re bit 23:

When the property is set, commutation with zero mark can be de-selected using p0430.23.

Re bit 24:

If the property is set, commutation to the selected zero mark can be carried out.

r0459 Sensor Module properties extended / SM prop ext

ENC

Can be changed: -	**Calculated:** -	**Access level:** 3
Data type: Unsigned32	**Dynamic index:** -	**Func. diagram:** -
P-Group: Encoder	**Units group:** -	**Unit selection:** -
Not for motor type: -	**Scaling:** -	**Expert list:** 1
Min	**Max**	**Factory setting**
-	-	-

Description: Displays the extended properties supported by the Sensor Module.

Bit field:

Bit	Signal name	1 signal	0 signal	FP
00	Data logger	Yes	No	-
01	Zero mark edge detection	Yes	No	-
02	Correction position actual value XIST1	Yes	No	-
04	Edge evaluation bit 0	Yes	No	-
05	Edge evaluation bit 1	Yes	No	-
06	Freeze the speed actual value for dn/dt errors	Yes	No	-
07	Accumulate uncorrected encoder pulses	Yes	No	-
09	Function p0426, p0439 supported	Yes	No	-
10	Pulse/direction interface	Yes	No	-
11	Fault handling after PROFIdrive	Yes	No	-
12	Activate additional messages	Yes	No	-
13	Absolute position for incremental encoder supported	Yes	No	-
14	Spindle functionality	Yes	No	-
15	Additional temperature sensor available	Yes	No	-
16	Internal encoder temperature available	Yes	No	-
25	Deselect monitoring multiturn representation in Gx_XIST2	Yes	No	-
26	Track monitoring de-selection	Yes	No	-

© Siemens AG 2012 All Rights Reserved

28	EnDat linear encoder monitoring incremental/absolute	Yes	No	-
29	EnDat encoder initialization with high accuracy	Yes	No	-
31	Analog unipolar track monitoring	Yes	No	-

Dependency: Refer to: p0437

Note: A value of zero is displayed if an encoder is not present.

Re bit 09:

Parameter p0426 or p0439 has been modified. These functions are not supported by the connected Sensor Module.

r0459 Sensor Module properties extended / SM prop ext

ENC (Lin_enc)

Can be changed: -	**Calculated:** -	**Access level:** 3
Data type: Unsigned32	**Dynamic index:** -	**Func. diagram:** -
P-Group: Encoder	**Units group:** -	**Unit selection:** -
Not for motor type: -	**Scaling:** -	**Expert list:** 1
Min	**Max**	**Factory setting**
-	-	-

Description: Displays the extended properties supported by the Sensor Module.

Bit field:

Bit	Signal name	1 signal	0 signal	FP
00	Data logger	Yes	No	-
01	Zero mark edge detection	Yes	No	-
02	Correction position actual value XIST1	Yes	No	-
04	Edge evaluation bit 0	Yes	No	-
05	Edge evaluation bit 1	Yes	No	-
06	Freeze actual velocity for dn/dt errors	Yes	No	-
07	Accumulate uncorrected encoder pulses	Yes	No	-
09	Function p0426, p0439 supported	Yes	No	-
10	Pulse/direction interface	Yes	No	-
11	Fault handling after PROFIdrive	Yes	No	-
12	Activate additional messages	Yes	No	-
13	Absolute position for incremental encoder supported	Yes	No	-
14	Spindle functionality	Yes	No	-
15	Additional temperature sensor available	Yes	No	-
16	Internal encoder temperature available	Yes	No	-
25	Deselect monitoring multiturn representation in Gx_XIST2	Yes	No	-
26	Track monitoring de-selection	Yes	No	-
28	EnDat linear encoder monitoring incremental/absolute	Yes	No	-
29	EnDat encoder initialization with high accuracy	Yes	No	-
31	Analog unipolar track monitoring	Yes	No	-

Dependency: Refer to: p0437

Note: A value of zero is displayed if an encoder is not present.

Re bit 09:

Parameter p0426 or p0439 has been modified. These functions are not supported by the connected Sensor Module.

© Siemens AG 2012 All Rights Reserved

r0459[0...2] Sensor Module properties extended / SM prop ext

VECTOR_G

Can be changed: -	**Calculated:** -	**Access level:** 3
Data type: Unsigned32	**Dynamic index:** -	**Func. diagram:** -
P-Group: Encoder	**Units group:** -	**Unit selection:** -
Not for motor type: -	**Scaling:** -	**Expert list:** 1
Min	**Max**	**Factory setting**
-	-	-

Description: Displays the extended properties supported by the Sensor Module.

Index:
[0] = Encoder 1
[1] = Encoder 2
[2] = Encoder 3

Bit field:

Bit	Signal name	1 signal	0 signal	FP
00	Data logger	Yes	No	-
01	Zero mark edge detection	Yes	No	-
02	Correction position actual value XIST1	Yes	No	-
04	Edge evaluation bit 0	Yes	No	-
05	Edge evaluation bit 1	Yes	No	-
06	Freeze the speed actual value for dn/dt errors	Yes	No	-
07	Accumulate uncorrected encoder pulses	Yes	No	-
09	Function p0426, p0439 supported	Yes	No	-
10	Pulse/direction interface	Yes	No	-
11	Fault handling after PROFIdrive	Yes	No	-
12	Activate additional messages	Yes	No	-
13	Absolute position for incremental encoder supported	Yes	No	-
14	Spindle functionality	Yes	No	-
15	Additional temperature sensor available	Yes	No	-
16	Internal encoder temperature available	Yes	No	-
25	Deselect monitoring multiturn representation in Gx_XIST2	Yes	No	-
26	Track monitoring de-selection	Yes	No	-
28	EnDat linear encoder monitoring incremental/absolute	Yes	No	-
29	EnDat encoder initialization with high accuracy	Yes	No	-
31	Analog unipolar track monitoring	Yes	No	-

Dependency: Refer to: p0437

Note: A value of zero is displayed if an encoder is not present.

Re bit 09:

Parameter p0426 or p0439 has been modified. These functions are not supported by the connected Sensor Module.

r0460 Encoder serial number part 1 / Enc ser_no 1

ENC

Can be changed: -	**Calculated:** -	**Access level:** 3
Data type: Unsigned32	**Dynamic index:** -	**Func. diagram:** -
P-Group: Encoder	**Units group:** -	**Unit selection:** -
Not for motor type: -	**Scaling:** -	**Expert list:** 1
Min	**Max**	**Factory setting**
-	-	-

Description: Displays the actual serial number part 1 of the appropriate encoder.

Dependency: Refer to: p0441, p0442, p0443, p0444, p0445, r0461, r0462, r0463, r0464

© Siemens AG 2012 All Rights Reserved

r0460[0...2] Encoder serial number part 1 / Enc ser_no 1

VECTOR_G	**Can be changed:** -	**Calculated:** -	**Access level:** 3
	Data type: Unsigned32	**Dynamic index:** -	**Func. diagram:** -
	P-Group: Encoder	**Units group:** -	**Unit selection:** -
	Not for motor type: -	**Scaling:** -	**Expert list:** 1
	Min	**Max**	**Factory setting**
	-	-	-

Description: Displays the actual serial number part 1 of the appropriate encoder.

Index:
[0] = Encoder 1
[1] = Encoder 2
[2] = Encoder 3

Dependency: Refer to: p0441, p0442, p0443, p0444, p0445, r0461, r0462, r0463, r0464

r0461 Encoder serial number part 2 / Enc ser_no 2

ENC	**Can be changed:** -	**Calculated:** -	**Access level:** 3
	Data type: Unsigned32	**Dynamic index:** -	**Func. diagram:** -
	P-Group: Encoder	**Units group:** -	**Unit selection:** -
	Not for motor type: -	**Scaling:** -	**Expert list:** 1
	Min	**Max**	**Factory setting**
	-	-	-

Description: Displays the actual serial number part 2 of the appropriate encoder.

Dependency: Refer to: p0441, p0442, p0443, p0444, p0445, r0460, r0462, r0463, r0464

r0461[0...2] Encoder serial number part 2 / Enc ser_no 2

VECTOR_G	**Can be changed:** -	**Calculated:** -	**Access level:** 3
	Data type: Unsigned32	**Dynamic index:** -	**Func. diagram:** -
	P-Group: Encoder	**Units group:** -	**Unit selection:** -
	Not for motor type: -	**Scaling:** -	**Expert list:** 1
	Min	**Max**	**Factory setting**
	-	-	-

Description: Displays the actual serial number part 2 of the appropriate encoder.

Index:
[0] = Encoder 1
[1] = Encoder 2
[2] = Encoder 3

Dependency: Refer to: p0441, p0442, p0443, p0444, p0445, r0460, r0462, r0463, r0464

r0462 Encoder serial number part 3 / Enc ser_no 3

ENC	**Can be changed:** -	**Calculated:** -	**Access level:** 3
	Data type: Unsigned32	**Dynamic index:** -	**Func. diagram:** -
	P-Group: Encoder	**Units group:** -	**Unit selection:** -
	Not for motor type: -	**Scaling:** -	**Expert list:** 1
	Min	**Max**	**Factory setting**
	-	-	-

Description: Displays the actual serial number part 3 of the appropriate encoder.

Dependency: Refer to: p0441, p0442, p0443, p0444, p0445, r0460, r0461, r0463, r0464

© Siemens AG 2012 All Rights Reserved

r0462[0...2] Encoder serial number part 3 / Enc ser_no 3

VECTOR_G	**Can be changed:** -	**Calculated:** -	**Access level:** 3
	Data type: Unsigned32	**Dynamic index:** -	**Func. diagram:** -
	P-Group: Encoder	**Units group:** -	**Unit selection:** -
	Not for motor type: -	**Scaling:** -	**Expert list:** 1
	Min	**Max**	**Factory setting**
	-	-	-

Description: Displays the actual serial number part 3 of the appropriate encoder.

Index:
[0] = Encoder 1
[1] = Encoder 2
[2] = Encoder 3

Dependency: Refer to: p0441, p0442, p0443, p0444, p0445, r0460, r0461, r0463, r0464

r0463 Encoder serial number part 4 / Enc ser_no 4

ENC	**Can be changed:** -	**Calculated:** -	**Access level:** 3
	Data type: Unsigned32	**Dynamic index:** -	**Func. diagram:** -
	P-Group: Encoder	**Units group:** -	**Unit selection:** -
	Not for motor type: -	**Scaling:** -	**Expert list:** 1
	Min	**Max**	**Factory setting**
	-	-	-

Description: Displays the actual serial number part 4 of the appropriate encoder.

Dependency: Refer to: p0441, p0442, p0443, p0444, p0445, r0460, r0461, r0462, r0464

r0463[0...2] Encoder serial number part 4 / Enc ser_no 4

VECTOR_G	**Can be changed:** -	**Calculated:** -	**Access level:** 3
	Data type: Unsigned32	**Dynamic index:** -	**Func. diagram:** -
	P-Group: Encoder	**Units group:** -	**Unit selection:** -
	Not for motor type: -	**Scaling:** -	**Expert list:** 1
	Min	**Max**	**Factory setting**
	-	-	-

Description: Displays the actual serial number part 4 of the appropriate encoder.

Index:
[0] = Encoder 1
[1] = Encoder 2
[2] = Encoder 3

Dependency: Refer to: p0441, p0442, p0443, p0444, p0445, r0460, r0461, r0462, r0464

r0464 Encoder serial number part 5 / Enc ser_no 5

ENC	**Can be changed:** -	**Calculated:** -	**Access level:** 3
	Data type: Unsigned32	**Dynamic index:** -	**Func. diagram:** -
	P-Group: Encoder	**Units group:** -	**Unit selection:** -
	Not for motor type: -	**Scaling:** -	**Expert list:** 1
	Min	**Max**	**Factory setting**
	-	-	-

Description: Displays the actual serial number part 5 of the appropriate encoder.

Dependency: Refer to: p0441, p0442, p0443, p0444, p0445, r0460, r0461, r0462, r0463

© Siemens AG 2012 All Rights Reserved

r0464[0...2] Encoder serial number part 5 / Enc ser_no 5

VECTOR_G	**Can be changed:** -	**Calculated:** -	**Access level:** 3
	Data type: Unsigned32	**Dynamic index:** -	**Func. diagram:** -
	P-Group: Encoder	**Units group:** -	**Unit selection:** -
	Not for motor type: -	**Scaling:** -	**Expert list:** 1
	Min	**Max**	**Factory setting**
	-	-	-

Description: Displays the actual serial number part 5 of the appropriate encoder.

Index:
[0] = Encoder 1
[1] = Encoder 2
[2] = Encoder 3

Dependency: Refer to: p0441, p0442, p0443, p0444, p0445, r0460, r0461, r0462, r0463

r0465[0...27] Encoder 1 identification number/serial number / Enc1 ID_no/Ser_no

ENC, VECTOR_G	**Can be changed:** -	**Calculated:** -	**Access level:** 3
	Data type: Unsigned8	**Dynamic index:** -	**Func. diagram:** -
	P-Group: Encoder	**Units group:** -	**Unit selection:** -
	Not for motor type: -	**Scaling:** -	**Expert list:** 1
	Min	**Max**	**Factory setting**
	-	-	-

Description: Displays the identification/serial number of encoder 1.
Index 0 = first character of the identification number
...
Index x = 20 hex (blank) --> separation between the identification number of serial number
Index x + 1 = 2F hex (slash) --> separation between the identification number of serial number
Index x + 2 = 20 hex (blank) --> separation between the identification number of serial number
Index x + 3 = first character of the serial number
...
Index y with contents = last character of the serial number

Dependency: Refer to: r0460, r0461, r0462, r0463, r0464

Notice: An ASCII table (excerpt) can be found, for example, in the appendix to the List Manual.

Note: The individual characters of the identification number/serial number are available coded as ASCII characters.

r0466[0...27] Encoder 2 identification number/serial number / Enc2 ID_no/Ser_no

VECTOR_G	**Can be changed:** -	**Calculated:** -	**Access level:** 3
	Data type: Unsigned8	**Dynamic index:** -	**Func. diagram:** -
	P-Group: Encoder	**Units group:** -	**Unit selection:** -
	Not for motor type: -	**Scaling:** -	**Expert list:** 1
	Min	**Max**	**Factory setting**
	-	-	-

Description: Displays the identification/serial number of encoder 2.
Index 0 = first character of the identification number
...
Index x = 20 hex (blank) --> separation between the identification number of serial number
Index x + 1 = 2F hex (slash) --> separation between the identification number of serial number
Index x + 2 = 20 hex (blank) --> separation between the identification number of serial number
Index x + 3 = first character of the serial number
...
Index y with contents = last character of the serial number

Dependency: Refer to: r0460, r0461, r0462, r0463, r0464

Notice: An ASCII table (excerpt) can be found, for example, in the appendix to the List Manual.

Note: The individual characters of the identification number/serial number are available coded as ASCII characters.

© Siemens AG 2012 All Rights Reserved

r0467[0...27] Encoder 3 identification number/serial number / Enc3 ID_no/Ser_no

VECTOR_G	**Can be changed:** -	**Calculated:** -	**Access level:** 3
	Data type: Unsigned8	**Dynamic index:** -	**Func. diagram:** -
	P-Group: Encoder	**Units group:** -	**Unit selection:** -
	Not for motor type: -	**Scaling:** -	**Expert list:** 1
	Min	**Max**	**Factory setting**
	-	-	-

Description: Displays the identification/serial number of encoder 3.
Index 0 = first character of the identification number
...
Index x = 20 hex (blank) --> separation between the identification number of serial number
Index x + 1 = 2F hex (slash) --> separation between the identification number of serial number
Index x + 2 = 20 hex (blank) --> separation between the identification number of serial number
Index x + 3 = first character of the serial number
...
Index y with contents = last character of the serial number

Dependency: Refer to: r0460, r0461, r0462, r0463, r0464

Notice: An ASCII table (excerpt) can be found, for example, in the appendix to the List Manual.

Note: The individual characters of the identification number/serial number are available coded as ASCII characters.

r0469 Absolute encoder linear measuring step / Enc lin meas step

ENC	**Can be changed:** -	**Calculated:** -	**Access level:** 3
	Data type: Unsigned32	**Dynamic index:** -	**Func. diagram:** -
	P-Group: Encoder	**Units group:** -	**Unit selection:** -
	Not for motor type: -	**Scaling:** -	**Expert list:** 1
	Min	**Max**	**Factory setting**
	- [nm]	- [nm]	- [nm]

Description: Displays the resolution of the absolute position for a linear absolute encoder.

Dependency: Refer to: p0422, p9514

r0469[0...2] Absolute encoder linear measuring step / Enc lin meas step

VECTOR_G	**Can be changed:** -	**Calculated:** -	**Access level:** 3
	Data type: Unsigned32	**Dynamic index:** -	**Func. diagram:** -
	P-Group: Encoder	**Units group:** -	**Unit selection:** -
	Not for motor type: -	**Scaling:** -	**Expert list:** 1
	Min	**Max**	**Factory setting**
	- [nm]	- [nm]	- [nm]

Description: Displays the resolution of the absolute position for a linear absolute encoder.

Index: [0] = Encoder 1
[1] = Encoder 2
[2] = Encoder 3

Dependency: Refer to: p0422, p9514

r0470 Redundant coarse value valid bits / Valid bits

ENC	**Can be changed:** -	**Calculated:** -	**Access level:** 3
	Data type: Unsigned16	**Dynamic index:** -	**Func. diagram:** -
	P-Group: Encoder	**Units group:** -	**Unit selection:** -
	Not for motor type: -	**Scaling:** -	**Expert list:** 1
	Min	**Max**	**Factory setting**
	-	-	-

Description: Displays the valid bits of the redundant coarse position value.

Dependency: Refer to: p9323, p9523

© Siemens AG 2012 All Rights Reserved

r0470[0...2] Redundant coarse value valid bits / Valid bits

VECTOR_G	**Can be changed:** -	**Calculated:** -	**Access level:** 3
	Data type: Unsigned16	**Dynamic index:** -	**Func. diagram:** -
	P-Group: Encoder	**Units group:** -	**Unit selection:** -
	Not for motor type: -	**Scaling:** -	**Expert list:** 1
	Min	**Max**	**Factory setting**
	-	-	-

Description: Displays the valid bits of the redundant coarse position value.

Index: [0] = Encoder 1
[1] = Encoder 2
[2] = Encoder 3

Dependency: Refer to: p9323, p9523

r0471 Redundant coarse value fine resolution bits / Fine bit

ENC	**Can be changed:** -	**Calculated:** -	**Access level:** 3
	Data type: Integer16	**Dynamic index:** -	**Func. diagram:** -
	P-Group: Encoder	**Units group:** -	**Unit selection:** -
	Not for motor type: -	**Scaling:** -	**Expert list:** 1
	Min	**Max**	**Factory setting**
	-	-	-

Description: Displays the number of valid bits for the fine resolution of the redundant coarse position value.

Dependency: Refer to: p9324, p9524

r0471[0...2] Redundant coarse value fine resolution bits / Fine bit

VECTOR_G	**Can be changed:** -	**Calculated:** -	**Access level:** 3
	Data type: Integer16	**Dynamic index:** -	**Func. diagram:** -
	P-Group: Encoder	**Units group:** -	**Unit selection:** -
	Not for motor type: -	**Scaling:** -	**Expert list:** 1
	Min	**Max**	**Factory setting**
	-	-	-

Description: Displays the number of valid bits for the fine resolution of the redundant coarse position value.

Index: [0] = Encoder 1
[1] = Encoder 2
[2] = Encoder 3

Dependency: Refer to: p9324, p9524

r0472 Redundant coarse position value relevant bits / Relevant bits

ENC	**Can be changed:** -	**Calculated:** -	**Access level:** 3
	Data type: Unsigned16	**Dynamic index:** -	**Func. diagram:** -
	P-Group: Encoder	**Units group:** -	**Unit selection:** -
	Not for motor type: -	**Scaling:** -	**Expert list:** 1
	Min	**Max**	**Factory setting**
	-	-	-

Description: Displays the number of relevant bits for the redundant coarse position value.

© Siemens AG 2012 All Rights Reserved

r0472[0...2] Redundant coarse position value relevant bits / Relevant bits

VECTOR_G

Can be changed: -	**Calculated:** -	**Access level:** 3
Data type: Unsigned16	**Dynamic index:** -	**Func. diagram:** -
P-Group: Encoder	**Units group:** -	**Unit selection:** -
Not for motor type: -	**Scaling:** -	**Expert list:** 1
Min	**Max**	**Factory setting**
-	-	-

Description: Displays the number of relevant bits for the redundant coarse position value.

Index:
[0] = Encoder 1
[1] = Encoder 2
[2] = Encoder 3

r0473 Non safety-relevant measuring steps position value pos1 / nsrPos1

ENC

Can be changed: -	**Calculated:** -	**Access level:** 3
Data type: Unsigned32	**Dynamic index:** -	**Func. diagram:** -
P-Group: Encoder	**Units group:** -	**Unit selection:** -
Not for motor type: -	**Scaling:** -	**Expert list:** 1
Min	**Max**	**Factory setting**
-	-	-

Description: Displays the non safety-relevant measuring steps of POS1.

Dependency: Refer to: p0416, p9513

r0473[0...2] Non safety-relevant measuring steps position value pos1 / nsrPos1

VECTOR_G

Can be changed: -	**Calculated:** -	**Access level:** 3
Data type: Unsigned32	**Dynamic index:** -	**Func. diagram:** -
P-Group: Encoder	**Units group:** -	**Unit selection:** -
Not for motor type: -	**Scaling:** -	**Expert list:** 1
Min	**Max**	**Factory setting**
-	-	-

Description: Displays the non safety-relevant measuring steps of POS1.

Index:
[0] = Encoder 1
[1] = Encoder 2
[2] = Encoder 3

Dependency: Refer to: p0416, p9513

r0474 Redundant coarse position value configuration / Red pos config

ENC

Can be changed: -	**Calculated:** -	**Access level:** 3
Data type: Unsigned32	**Dynamic index:** -	**Func. diagram:** -
P-Group: Encoder	**Units group:** -	**Unit selection:** -
Not for motor type: -	**Scaling:** -	**Expert list:** 1
Min	**Max**	**Factory setting**
-	-	-

Description: Displays the encoder configuration for the redundant coarse position value.

Bit field:

Bit	Signal name	1 signal	0 signal	FP
00	Incrementer	Yes	No	-
01	Encoder CRC least significant byte first	Yes	No	-
02	Redundant coarse position val. most significant bit left-aligned	Yes	No	-
04	Binary comparison not possible	Yes	No	-

Dependency: Refer to: p9315, p9515

© Siemens AG 2012 All Rights Reserved

r0474[0...2] Redundant coarse position value configuration / Red pos config

VECTOR_G

Can be changed: -	**Calculated:** -	**Access level:** 3
Data type: Unsigned32	**Dynamic index:** -	**Func. diagram:** -
P-Group: Encoder	**Units group:** -	**Unit selection:** -
Not for motor type: -	**Scaling:** -	**Expert list:** 1
Min	**Max**	**Factory setting**
-	-	-

Description: Displays the encoder configuration for the redundant coarse position value.

Index:
[0] = Encoder 1
[1] = Encoder 2
[2] = Encoder 3

Bit field:

Bit	Signal name	1 signal	0 signal	FP
00	Incrementer	Yes	No	-
01	Encoder CRC least significant byte first	Yes	No	-
02	Redundant coarse position val. most significant bit left-aligned	Yes	No	-
04	Binary comparison not possible	Yes	No	-

Dependency: Refer to: p9315, p9515

r0475 Gx_XIST1 coarse position safe most significant bit / Gx_XIST1 safe MSB

ENC

Can be changed: -	**Calculated:** -	**Access level:** 3
Data type: Unsigned16	**Dynamic index:** -	**Func. diagram:** -
P-Group: Encoder	**Units group:** -	**Unit selection:** -
Not for motor type: -	**Scaling:** -	**Expert list:** 1
Min	**Max**	**Factory setting**
-	-	-

Description: Displays the bit number for the safe most significant bit (MSB) of the Gx_XIST1 coarse position.

Note: MSB: Most Significant Bit

r0475[0...2] Gx_XIST1 coarse position safe most significant bit / Gx_XIST1 safe MSB

VECTOR_G

Can be changed: -	**Calculated:** -	**Access level:** 3
Data type: Unsigned16	**Dynamic index:** -	**Func. diagram:** -
P-Group: Encoder	**Units group:** -	**Unit selection:** -
Not for motor type: -	**Scaling:** -	**Expert list:** 1
Min	**Max**	**Factory setting**
-	-	-

Description: Displays the bit number for the safe most significant bit (MSB) of the Gx_XIST1 coarse position.

Index:
[0] = Encoder 1
[1] = Encoder 2
[2] = Encoder 3

Note: MSB: Most Significant Bit

r0477 CO: Measuring gear, position difference / Meas gear pos diff

ENC

Can be changed: -	**Calculated:** -	**Access level:** 1
Data type: Integer32	**Dynamic index:** -	**Func. diagram:** -
P-Group: Encoder	**Units group:** -	**Unit selection:** -
Not for motor type: -	**Scaling:** -	**Expert list:** 1
Min	**Max**	**Factory setting**
-	-	-

Description: Displays the position difference before the measuring gear between powering down and powering up.

Dependency: Refer to: F31501, F32501, F33501

Note: The increments are displayed in the format the same as r0483. The position difference should be read in encoder increments.

© Siemens AG 2012 All Rights Reserved

r0477[0...2] CO: Measuring gear, position difference / Meas gear pos diff

VECTOR_G

Can be changed: -	**Calculated:** -	**Access level:** 1
Data type: Integer32	**Dynamic index:** -	**Func. diagram:** -
P-Group: Encoder	**Units group:** -	**Unit selection:** -
Not for motor type: -	**Scaling:** -	**Expert list:** 1
Min	**Max**	**Factory setting**
-	-	-

Description: Displays the position difference before the measuring gear between powering down and powering up.

Index:
[0] = Encoder 1
[1] = Encoder 2
[2] = Encoder 3

Dependency: Refer to: F31501, F32501, F33501

Note: The increments are displayed in the format the same as r0483. The position difference should be read in encoder increments.

r0479 CO: Diagnostics encoder position actual value Gn_XIST1 / Diag Gn_XIST1

ENC

Can be changed: -	**Calculated:** -	**Access level:** 3
Data type: Integer32	**Dynamic index:** -	**Func. diagram:** 4704
P-Group: Encoder	**Units group:** -	**Unit selection:** -
Not for motor type: -	**Scaling:** -	**Expert list:** 1
Min	**Max**	**Factory setting**
-	-	-

Description: Displays the encoder actual position value Gn_XIST1 according to PROFIdrive for diagnostics.
In contrast to r0482, the value is updated in each DRIVE-CLiQ basic clock cycle and displayed with sign.

Caution: Following ramping-up or after a data set changeover, the new value is present at connector inputs which are interconnected to connector output r0479 and under certain circumstances take 100 ms to become available.
Reason:
These interconnections are updated in the background, unlike interconnections involving other connector outputs (e.g. CO: r0482).
The value is immediately available when non-cyclically reading r0479 (e.g. via the expert list).

r0479[0...2] CO: Diagnostics encoder position actual value Gn_XIST1 / Diag Gn_XIST1

VECTOR_G

Can be changed: -	**Calculated:** -	**Access level:** 3
Data type: Integer32	**Dynamic index:** -	**Func. diagram:** 4704
P-Group: Encoder	**Units group:** -	**Unit selection:** -
Not for motor type: -	**Scaling:** -	**Expert list:** 1
Min	**Max**	**Factory setting**
-	-	-

Description: Displays the encoder actual position value Gn_XIST1 according to PROFIdrive for diagnostics.
In contrast to r0482, the value is updated in each DRIVE-CLiQ basic clock cycle and displayed with sign.

Index:
[0] = Encoder 1
[1] = Encoder 2
[2] = Encoder 3

Caution: Following ramping-up or after a data set changeover, the new value is present at connector inputs which are interconnected to connector output r0479 and under certain circumstances take 100 ms to become available.
Reason:
These interconnections are updated in the background, unlike interconnections involving other connector outputs (e.g. CO: r0482).
The value is immediately available when non-cyclically reading r0479 (e.g. via the expert list).

© Siemens AG 2012 All Rights Reserved

p0480 CI: Encoder control word Gn_STW signal source / Enc Gn_STW S_src

ENC

Can be changed: T	**Calculated:** -	**Access level:** 3
Data type: Unsigned32 / Integer16	**Dynamic index:** -	**Func. diagram:** 1580, 4720, 4750
P-Group: Encoder	**Units group:** -	**Unit selection:** -
Not for motor type: -	**Scaling:** -	**Expert list:** 1
Min	**Max**	**Factory setting**
-	-	0

Description: Sets the signal source for the encoder control word Gn_STW according to PROFIdrive.

Note: When the function module "basic positioner" (r0108.4 = 1) is activated, the following BICO interconnection is established:

CI: p0480[0] = r2520[0], CI: p0480[1] = r2520[1] and CI: p0480[2] = r2520[2]

p0480[0...2] CI: Encoder control word Gn_STW signal source / Enc Gn_STW S_src

VECTOR_G

Can be changed: T	**Calculated:** -	**Access level:** 3
Data type: Unsigned32 / Integer16	**Dynamic index:** -	**Func. diagram:** 1580, 4720, 4750
P-Group: Encoder	**Units group:** -	**Unit selection:** -
Not for motor type: -	**Scaling:** -	**Expert list:** 1
Min	**Max**	**Factory setting**
-	-	0

Description: Sets the signal source for the encoder control word Gn_STW according to PROFIdrive.

Index:
[0] = Encoder 1
[1] = Encoder 2
[2] = Encoder 3

Note: When the function module "basic positioner" (r0108.4 = 1) is activated, the following BICO interconnection is established:

CI: p0480[0] = r2520[0], CI: p0480[1] = r2520[1] and CI: p0480[2] = r2520[2]

r0481 CO: Encoder status word Gn_ZSW / Enc Gn_ZSW

ENC

Can be changed: -	**Calculated:** -	**Access level:** 3
Data type: Unsigned16	**Dynamic index:** -	**Func. diagram:** 4704, 4730, 4750
P-Group: Encoder	**Units group:** -	**Unit selection:** -
Not for motor type: -	**Scaling:** -	**Expert list:** 1
Min	**Max**	**Factory setting**
-	-	-

Description: Displays the encoder status word Gn_ZSW according to PROFIdrive.

Bit field:

Bit	Signal name	1 signal	0 signal	FP
00	Function 1 active	Yes	No	-
01	Function 2 active	Yes	No	-
02	Function 3 active	Yes	No	-
03	Function 4 active	Yes	No	-
04	Value 1	Displayed in r0483	Not present	-
05	Value 2	Displayed in r0483	Not present	-
06	Value 3	Displayed in r0483	Not present	-
07	Value 4	Displayed in r0483	Not present	-
08	Measuring probe 1 deflected	Yes	No	-
09	Measuring probe 2 deflected	Yes	No	-
11	Encoder fault acknowledge active	Yes	No	9676
13	Absolute value cyclically	Displayed in r0483	No	-
14	Parking encoder active	Yes	No	-
15	Encoder fault	Displayed in r0483	None	-

Notice: Information on Gn_STW/Gn_ZSW can, e.g. be found in the following literature:

SINAMICS S120 Function Manual Drive Functions

© Siemens AG 2012 All Rights Reserved

Note: Re bit 14:
Displays the acknowledgement for "activate parking encoder" (Gn_STW.14 = 1) or encoder position actual value (Gn_XIST1) invalid.
Re bit 14, 15:
r0481.14 = 1 and r0481.15 = 0 can have one of the following causes:
- the encoder is parked.
- the encoder is de-activated.
- the encoder is being commissioned.
- no parameterized encoder available.
- encoder data set is being changed over.
r0481.14 = 1 and r0481.15 = 1 has the following significance:
An encoder error has occurred and the encoder position actual value (Gn_XIST1) is invalid.

r0481[0...2] CO: Encoder status word Gn_ZSW / Enc Gn_ZSW

VECTOR_G

Can be changed: -	**Calculated:** -	**Access level:** 3
Data type: Unsigned16	**Dynamic index:** -	**Func. diagram:** 4010, 4704, 4730, 4750
P-Group: Encoder	**Units group:** -	**Unit selection:** -
Not for motor type: -	**Scaling:** -	**Expert list:** 1
Min	**Max**	**Factory setting**
-	-	-

Description: Displays the encoder status word Gn_ZSW according to PROFIdrive.

Index:
[0] = Encoder 1
[1] = Encoder 2
[2] = Encoder 3

Bit field:

Bit	Signal name	1 signal	0 signal	FP
00	Function 1 active	Yes	No	-
01	Function 2 active	Yes	No	-
02	Function 3 active	Yes	No	-
03	Function 4 active	Yes	No	-
04	Value 1	Displayed in r0483	Not present	-
05	Value 2	Displayed in r0483	Not present	-
06	Value 3	Displayed in r0483	Not present	-
07	Value 4	Displayed in r0483	Not present	-
08	Measuring probe 1 deflected	Yes	No	-
09	Measuring probe 2 deflected	Yes	No	-
11	Encoder fault acknowledge active	Yes	No	9676
13	Absolute value cyclically	Displayed in r0483	No	-
14	Parking encoder active	Yes	No	-
15	Encoder fault	Displayed in r0483	None	-

Notice: Information on Gn_STW/Gn_ZSW can, e.g. be found in the following literature:
SINAMICS S120 Function Manual Drive Functions

Note: Re bit 14:
Displays the acknowledgement for "activate parking encoder" (Gn_STW.14 = 1) or encoder position actual value (Gn_XIST1) invalid.
Re bit 14, 15:
r0481.14 = 1 and r0481.15 = 0 can have one of the following causes:
- the encoder is parked.
- the encoder is de-activated.
- the encoder is being commissioned.
- no parameterized encoder available.
- encoder data set is being changed over.
r0481.14 = 1 and r0481.15 = 1 has the following significance:
An encoder error has occurred and the encoder position actual value (Gn_XIST1) is invalid.

© Siemens AG 2012 All Rights Reserved

r0482 CO: Encoder actual position value Gn_XIST1 / Enc Gn_XIST1

ENC

Can be changed: -	**Calculated:** -	**Access level:** 3
Data type: Unsigned32	**Dynamic index:** -	**Func. diagram:** 4704, 4735, 4740, 4750
P-Group: Encoder	**Units group:** -	**Unit selection:** -
Not for motor type: -	**Scaling:** -	**Expert list:** 1
Min	**Max**	**Factory setting**
-	-	-

Description: Displays the encoder actual position value Gn_XIST1 according to PROFIdrive.

Note:
- this value is reset if necessary when the "parking encoder" (r0481.14) function is de-selected.
- in this value, the measuring gear (p0432, p0433) is only taken into account when the position tracking is activated (p0411.0 = 1).
- The update time for the position control (EPOS) corresponds to the position controller clock cycle p0115[4].
- The update time in isochronous operation corresponds to the bus cycle time r2064[1].
- The update time in isochronous operation and with position control (EPOS) corresponds to the position controller clock cycle p0115[4].
- The update time in non-isochronous operation or without position control (EPOS) comprises the following:

Update time = 4 * least common multiple (LCM) of all current controller clock cycles (p0115[0]) in the drive group (infeed + drives). The minimum update time is 1 ms.

Example 1: infeed, servo

Update time = 4 * LCM(250 µs, 125 µs) = 4 * 250 µs = 1 ms

Example 2: infeed, servo, vector

Update time = 4 * LCM(250 µs, 125 µs, 500 µs) = 4 * 500 µs = 2 ms

r0482[0...2] CO: Encoder actual position value Gn_XIST1 / Enc Gn_XIST1

VECTOR_G

Can be changed: -	**Calculated:** -	**Access level:** 3
Data type: Unsigned32	**Dynamic index:** -	**Func. diagram:** 1580, 1680, 4704, 4735, 4740, 4750
P-Group: Encoder	**Units group:** -	**Unit selection:** -
Not for motor type: -	**Scaling:** -	**Expert list:** 1
Min	**Max**	**Factory setting**
-	-	-

Description: Displays the encoder actual position value Gn_XIST1 according to PROFIdrive.

Index:
[0] = Encoder 1
[1] = Encoder 2
[2] = Encoder 3

Note:
- this value is reset if necessary when the "parking encoder" (r0481.14) function is de-selected.
- in this value, the measuring gear (p0432, p0433) is only taken into account when the position tracking is activated (p0411.0 = 1).
- The update time for the position control (EPOS) corresponds to the position controller clock cycle p0115[4].
- The update time in isochronous operation corresponds to the bus cycle time r2064[1].
- The update time in isochronous operation and with position control (EPOS) corresponds to the position controller clock cycle p0115[4].
- The update time in non-isochronous operation or without position control (EPOS) comprises the following:

Update time = 4 * least common multiple (LCM) of all current controller clock cycles (p0115[0]) in the drive group (infeed + drives). The minimum update time is 1 ms.

Example 1: infeed, servo

Update time = 4 * LCM(250 µs, 125 µs) = 4 * 250 µs = 1 ms

Example 2: infeed, servo, vector

Update time = 4 * LCM(250 µs, 125 µs, 500 µs) = 4 * 500 µs = 2 ms

© Siemens AG 2012 All Rights Reserved

r0483 CO: Encoder actual position value Gn_XIST2 / Enc Gn_XIST2

ENC	**Can be changed:** -	**Calculated:** -	**Access level:** 3
	Data type: Unsigned32	**Dynamic index:** -	**Func. diagram:** 4704, 4750
	P-Group: Encoder	**Units group:** -	**Unit selection:** -
	Not for motor type: -	**Scaling:** -	**Expert list:** 1
	Min	**Max**	**Factory setting**
	-	-	-

Description: Displays the encoder actual position value Gn_XIST2 according to PROFIdrive.

Recommend.: Possible causes of the error codes:
Error code 4097 and 4098: Defective Control Unit hardware.
Error codes 4099 and 4100: Too many measuring pulses have occurred.

Notice: The encoder position actual value must be requested using the encoder control word Gn_STW.13.

Note: - in this value, the measuring gear (p0432, p0433) is only taken into account when the position tracking is activated (p0411.0 = 1).
- if GxZSW.15 = 1 (r0481), then an error code with the following significance is located in Gx_XIST2 (r0483):
1: Encoder fault.
2: Possible position shift in Gx_XIST1.
3: Encoder parking not possible.
4: Abort, reference mark search.
5: Abort, retrieve reference value.
6: Abort, flying measurement.
7: Abort, retrieve measured value.
8: Abort, absolute value transfer.
3841: Function not supported.
4097: Abort, reference mark search due to an initialization error.
4098: Abort, flying measurement due to an initialization error.
4099: Abort, reference mark search due to a measuring error.
4100: Abort, flying measurement due to a measuring error.

r0483[0...2] CO: Encoder actual position value Gn_XIST2 / Enc Gn_XIST2

VECTOR_G	**Can be changed:** -	**Calculated:** -	**Access level:** 3
	Data type: Unsigned32	**Dynamic index:** -	**Func. diagram:** 1580, 1680, 4704, 4750
	P-Group: Encoder	**Units group:** -	**Unit selection:** -
	Not for motor type: -	**Scaling:** -	**Expert list:** 1
	Min	**Max**	**Factory setting**
	-	-	-

Description: Displays the encoder actual position value Gn_XIST2 according to PROFIdrive.

Recommend.: Possible causes of the error codes:
Error code 4097 and 4098: Defective Control Unit hardware.
Error codes 4099 and 4100: Too many measuring pulses have occurred.

Index: [0] = Encoder 1
[1] = Encoder 2
[2] = Encoder 3

Notice: The encoder position actual value must be requested using the encoder control word Gn_STW.13.

Note: - in this value, the measuring gear (p0432, p0433) is only taken into account when the position tracking is activated (p0411.0 = 1).
- if GxZSW.15 = 1 (r0481), then an error code with the following significance is located in Gx_XIST2 (r0483):
1: Encoder fault.
2: Possible position shift in Gx_XIST1.
3: Encoder parking not possible.
4: Abort, reference mark search.
5: Abort, retrieve reference value.

© Siemens AG 2012 All Rights Reserved

6: Abort, flying measurement.
7: Abort, retrieve measured value.
8: Abort, absolute value transfer.
3841: Function not supported.
4097: Abort, reference mark search due to an initialization error.
4098: Abort, flying measurement due to an initialization error.
4099: Abort, reference mark search due to a measuring error.
4100: Abort, flying measurement due to a measuring error.

r0484 CO: Redundant coarse encoder position + CRC / Enc red pos+CRC

ENC

Can be changed: -	**Calculated:** -	**Access level:** 3
Data type: Unsigned32	**Dynamic index:** -	**Func. diagram:** -
P-Group: Encoder	**Units group:** -	**Unit selection:** -
Not for motor type: -	**Scaling:** -	**Expert list:** 1
Min	**Max**	**Factory setting**
-	-	-

Description:
Displays the redundant coarse encoder position including CRC (Cyclic Redundancy Check).
Upper 16 bits:
CRC over the redundant coarse encoder position.
Lower 16 bits:
Redundant coarse encoder position.
On an SMx Sensor Module, the encoder coarse position count direction is opposite to r0482 (encoder actual value Gn_XIST1). The value contains 2 bit fine resolution.
With a DRIVE-CLiQ encoder, the encoder coarse position count direction is the same as r0482.

Dependency:
The values are valid when the safety position actual value sensing is activated (p0430.19 = 1).
Refer to: p0430

Note:
This absolute value does not change, contrary to r0482, when de-selecting the function "parking axis".

r0484[0...2] CO: Redundant coarse encoder position + CRC / Enc red pos+CRC

VECTOR_G

Can be changed: -	**Calculated:** -	**Access level:** 3
Data type: Unsigned32	**Dynamic index:** -	**Func. diagram:** -
P-Group: Encoder	**Units group:** -	**Unit selection:** -
Not for motor type: -	**Scaling:** -	**Expert list:** 1
Min	**Max**	**Factory setting**
-	-	-

Description:
Displays the redundant coarse encoder position including CRC (Cyclic Redundancy Check).
Upper 16 bits:
CRC over the redundant coarse encoder position.
Lower 16 bits:
Redundant coarse encoder position.
On an SMx Sensor Module, the encoder coarse position count direction is opposite to r0482 (encoder actual value Gn_XIST1). The value contains 2 bit fine resolution.
With a DRIVE-CLiQ encoder, the encoder coarse position count direction is the same as r0482.

Index:
[0] = Encoder 1
[1] = Encoder 2
[2] = Encoder 3

Dependency:
The values are valid when the safety position actual value sensing is activated (p0430.19 = 1).
Refer to: p0430

Note:
This absolute value does not change, contrary to r0482, when de-selecting the function "parking axis".

© Siemens AG 2012 All Rights Reserved

r0485 CO: Measuring gear, encoder raw value incremental / Enc raw val incr

ENC

Can be changed: -	**Calculated:** -	**Access level:** 1
Data type: Unsigned32	**Dynamic index:** -	**Func. diagram:** -
P-Group: Encoder	**Units group:** -	**Unit selection:** -
Not for motor type: -	**Scaling:** -	**Expert list:** 1
Min	**Max**	**Factory setting**
-	-	-

Description: Displays the raw value of the incremental encoder actual value before the measuring gear.

r0485[0...2] CO: Measuring gear, encoder raw value incremental / Enc raw val incr

VECTOR_G

Can be changed: -	**Calculated:** -	**Access level:** 1
Data type: Unsigned32	**Dynamic index:** -	**Func. diagram:** -
P-Group: Encoder	**Units group:** -	**Unit selection:** -
Not for motor type: -	**Scaling:** -	**Expert list:** 1
Min	**Max**	**Factory setting**
-	-	-

Description: Displays the raw value of the incremental encoder actual value before the measuring gear.

Index:
[0] = Encoder 1
[1] = Encoder 2
[2] = Encoder 3

r0486 CO: Measuring gear, encoder raw value absolute / Enc raw val abs

ENC

Can be changed: -	**Calculated:** -	**Access level:** 1
Data type: Unsigned32	**Dynamic index:** -	**Func. diagram:** -
P-Group: Encoder	**Units group:** -	**Unit selection:** -
Not for motor type: -	**Scaling:** -	**Expert list:** 1
Min	**Max**	**Factory setting**
-	-	-

Description: Displays the raw value of the absolute encoder actual value before the measuring gear.

r0486[0...2] CO: Measuring gear, encoder raw value absolute / Enc raw val abs

VECTOR_G

Can be changed: -	**Calculated:** -	**Access level:** 1
Data type: Unsigned32	**Dynamic index:** -	**Func. diagram:** -
P-Group: Encoder	**Units group:** -	**Unit selection:** -
Not for motor type: -	**Scaling:** -	**Expert list:** 1
Min	**Max**	**Factory setting**
-	-	-

Description: Displays the raw value of the absolute encoder actual value before the measuring gear.

Index:
[0] = Encoder 1
[1] = Encoder 2
[2] = Encoder 3

r0487 Diagnostic encoder control word Gn_STW / Enc Gn_STW

ENC

Can be changed: -	**Calculated:** -	**Access level:** 3
Data type: Unsigned16	**Dynamic index:** -	**Func. diagram:** 1580, 4704, 4720, 4740
P-Group: Encoder	**Units group:** -	**Unit selection:** -
Not for motor type: -	**Scaling:** -	**Expert list:** 1
Min	**Max**	**Factory setting**
-	-	-

Description: Displays the encoder control word Gn_STW according to PROFIdrive for diagnostics.

© Siemens AG 2012 All Rights Reserved

Bit field:

Bit	Signal name	1 signal	0 signal	FP
00	Request function 1	Yes	No	-
01	Request function 2	Yes	No	-
02	Request function 3	Yes	No	-
03	Request function 4	Yes	No	-
04	Request command bit 0	Yes	No	-
05	Request command bit 1	Yes	No	-
06	Request command bit 2	Yes	No	-
07	Flying measurement mode/search for reference mark	Flying measurement	Reference marks	-
13	Request absolute value cyclic	Yes	No	-
14	Request parking encoder	Yes	No	-
15	Request acknowledge encoder fault	Yes	No	-

Notice: Information on Gn_STW/Gn_ZSW should be taken from the corresponding product documentation.

Note: The signal source for the encoder control word is set with p0480.

r0487[0...2] Diagnostic encoder control word Gn_STW / Enc Gn_STW

VECTOR_G

Can be changed: - **Calculated:** - **Access level:** 3

Data type: Unsigned16 **Dynamic index:** - **Func. diagram:** 1580, 4704, 4720, 4740

P-Group: Encoder **Units group:** - **Unit selection:** -

Not for motor type: - **Scaling:** - **Expert list:** 1

Min	Max	Factory setting
-	-	-

Description: Displays the encoder control word Gn_STW according to PROFIdrive for diagnostics.

Index:
[0] = Encoder 1
[1] = Encoder 2
[2] = Encoder 3

Bit field:

Bit	Signal name	1 signal	0 signal	FP
00	Request function 1	Yes	No	-
01	Request function 2	Yes	No	-
02	Request function 3	Yes	No	-
03	Request function 4	Yes	No	-
04	Request command bit 0	Yes	No	-
05	Request command bit 1	Yes	No	-
06	Request command bit 2	Yes	No	-
07	Flying measurement mode/search for reference mark	Flying measurement	Reference marks	-
13	Request absolute value cyclic	Yes	No	-
14	Request parking encoder	Yes	No	-
15	Request acknowledge encoder fault	Yes	No	-

Notice: Information on Gn_STW/Gn_ZSW should be taken from the corresponding product documentation.

Note: The signal source for the encoder control word is set with p0480.

p0488 Measuring probe 1 input terminal / Meas probe 1 inp

ENC

Can be changed: U, T **Calculated:** - **Access level:** 3

Data type: Integer16 **Dynamic index:** - **Func. diagram:** 4740

P-Group: Encoder **Units group:** - **Unit selection:** -

Not for motor type: - **Scaling:** - **Expert list:** 1

Min	Max	Factory setting
0	8	0

Description: Sets the input terminal to connect probe 1.

Value:
0: No meas probe
1: DI/DO 9 (X122.10/X121.8)
2: DI/DO 10 (X122.12/X121.10)
3: DI/DO 11 (X122.13/X121.11)
4: DI/DO 13 (X132.10/X131.2)
5: DI/DO 14 (X132.12/X131.4)

© Siemens AG 2012 All Rights Reserved

6: DI/DO 15 (X132.13/X131.5)
7: DI/DO 8 (X122.9/X121.7)
8: DI/DO 12 (X132.9/X131.1)

Dependency: Refer to: p0489, p0728

Notice: To the terminal designation:
The first designation is valid for CU320, the second for CU310.
To select the values:
For Cx32, NX10 and NX15, only DI/DO 8, 9, 10, 11 can be selected as fast inputs (refer to the Equipment Manual).

Note: DI/DO: Bidirectional Digital Input/Output
The terminal must be set as input (p0728).
Refer to the encoder interface for PROFIdrive.
If parameterization is rejected, check whether the terminal is already being used in p0580, p0680, p2517 or p2518.

p0488[0...2] Measuring probe 1 input terminal / Meas probe 1 inp

VECTOR_G

Can be changed: U, T	**Calculated:** -	**Access level:** 3
Data type: Integer16	**Dynamic index:** -	**Func. diagram:** 4740
P-Group: Encoder	**Units group:** -	**Unit selection:** -
Not for motor type: -	**Scaling:** -	**Expert list:** 1
Min	**Max**	**Factory setting**
0	8	0

Description: Sets the input terminal to connect probe 1.

Value:
0: No meas probe
1: DI/DO 9 (X122.10/X121.8)
2: DI/DO 10 (X122.12/X121.10)
3: DI/DO 11 (X122.13/X121.11)
4: DI/DO 13 (X132.10/X131.2)
5: DI/DO 14 (X132.12/X131.4)
6: DI/DO 15 (X132.13/X131.5)
7: DI/DO 8 (X122.9/X121.7)
8: DI/DO 12 (X132.9/X131.1)

Index:
[0] = Encoder 1
[1] = Encoder 2
[2] = Encoder 3

Dependency: Refer to: p0489, p0728

Notice: To the terminal designation:
The first designation is valid for CU320, the second for CU310.
To select the values:
For Cx32, NX10 and NX15, only DI/DO 8, 9, 10, 11 can be selected as fast inputs (refer to the Equipment Manual).

Note: DI/DO: Bidirectional Digital Input/Output
The terminal must be set as input (p0728).
Refer to the encoder interface for PROFIdrive.
If parameterization is rejected, check whether the terminal is already being used in p0580, p0680, p2517 or p2518.

p0489 Measuring probe 2 input terminal / Meas probe 2 inp

ENC

Can be changed: U, T	**Calculated:** -	**Access level:** 3
Data type: Integer16	**Dynamic index:** -	**Func. diagram:** 4740
P-Group: Encoder	**Units group:** -	**Unit selection:** -
Not for motor type: -	**Scaling:** -	**Expert list:** 1
Min	**Max**	**Factory setting**
0	8	0

Description: Sets the input terminal to connect probe 2.

Value:
0: No meas probe
1: DI/DO 9 (X122.10/X121.8)
2: DI/DO 10 (X122.12/X121.10)
3: DI/DO 11 (X122.13/X121.11)

© Siemens AG 2012 All Rights Reserved

4: DI/DO 13 (X132.10/X131.2)
5: DI/DO 14 (X132.12/X131.4)
6: DI/DO 15 (X132.13/X131.5)
7: DI/DO 8 (X122.9/X121.7)
8: DI/DO 12 (X132.9/X131.1)

Dependency: Refer to: p0488, p0728

Notice: To the terminal designation:
The first designation is valid for CU320, the second for CU310.
To select the values:
For Cx32, NX10 and NX15, only DI/DO 8, 9, 10, 11 can be selected as fast inputs (refer to the Equipment Manual).

Note: DI/DO: Bidirectional Digital Input/Output
The terminal must be set as input (p0728).
Refer to the encoder interface for PROFIdrive.
If parameterization is rejected, check whether the terminal is already being used in p0580, p0680, p2517 or p2518.

p0489[0...2] Measuring probe 2 input terminal / Meas probe 2 inp

VECTOR_G

Can be changed: U, T	**Calculated:** -	**Access level:** 3
Data type: Integer16	**Dynamic index:** -	**Func. diagram:** 4740
P-Group: Encoder	**Units group:** -	**Unit selection:** -
Not for motor type: -	**Scaling:** -	**Expert list:** 1
Min	**Max**	**Factory setting**
0	8	0

Description: Sets the input terminal to connect probe 2.

Value:
0: No meas probe
1: DI/DO 9 (X122.10/X121.8)
2: DI/DO 10 (X122.12/X121.10)
3: DI/DO 11 (X122.13/X121.11)
4: DI/DO 13 (X132.10/X131.2)
5: DI/DO 14 (X132.12/X131.4)
6: DI/DO 15 (X132.13/X131.5)
7: DI/DO 8 (X122.9/X121.7)
8: DI/DO 12 (X132.9/X131.1)

Index:
[0] = Encoder 1
[1] = Encoder 2
[2] = Encoder 3

Dependency: Refer to: p0488, p0728

Notice: To the terminal designation:
The first designation is valid for CU320, the second for CU310.
To select the values:
For Cx32, NX10 and NX15, only DI/DO 8, 9, 10, 11 can be selected as fast inputs (refer to the Equipment Manual).

Note: DI/DO: Bidirectional Digital Input/Output
The terminal must be set as input (p0728).
Refer to the encoder interface for PROFIdrive.
If parameterization is rejected, check whether the terminal is already being used in p0580, p0680, p2517 or p2518.

p0491 Motor encoder fault response ENCODER / Fault resp ENCODER

VECTOR_G

Can be changed: T	**Calculated:** -	**Access level:** 3
Data type: Integer16	**Dynamic index:** -	**Func. diagram:** -
P-Group: Encoder	**Units group:** -	**Unit selection:** -
Not for motor type: -	**Scaling:** -	**Expert list:** 1
Min	**Max**	**Factory setting**
0	5	0

Description: Sets the behavior for the ENCODER fault response (motor encoder).
This means, for example, if an encoder fault occurs, encoderless operation can be automatically selected with a shutdown behavior that can be selected.

© Siemens AG 2012 All Rights Reserved

Value:
0: Encoder fault results in OFF2
1: Enc fault results in encoderless oper. and oper. continues
2: Encoder fault results in encoderless operation and OFF1
3: Encoder fault results in encoderless operation and OFF3
4: Encoder fault results in an armature short-cct int/DC braking
5: Enc fault results in encoderless op, operation continues, alarm

Dependency: The following parameters are relevant for encoderless operation.
Refer to: p0341, p0342, p1470, p1472, p1517, p1612, p1755
Refer to: F07575

Caution: For a value = 1, 2, 3, the following applies:
- encoderless operation must have been started.
For a value = 1, the following applies:
- in spite of the motor encoder fault that has occurred, the motor continues to operate.

Note: For a value = 1, 2, 3, the following applies:
- Refer to the status signal "encoderless operation due to a fault" (BO: r1407.13).
- Not possible for separately excited synchronous motors (p0300 = 5).

p0492 Square-wave encoder, maximum speed difference per sampling cycle / n_dif max/samp_cyc

ENC

Can be changed: U, T	**Calculated:** CALC_MOD_REG	**Access level:** 3
Data type: FloatingPoint32	**Dynamic index:** -	**Func. diagram:** -
P-Group: Encoder	**Units group:** -	**Unit selection:** -
Not for motor type: -	**Scaling:** -	**Expert list:** 1
Min	**Max**	**Factory setting**
0.00 [rpm]	210000.00 [rpm]	0.00 [rpm]

Description: Sets the maximum permissible speed difference within the current controller sampling time for squarewave encoders.

Dependency: Refer to: F31118, A31418

Note: For a value of 0.0, the speed change monitoring is disabled.
if the set maximum speed difference is only exceeded for one sampling time of the current controller, then an appropriate alarm is output. However, if the maximum speed difference is exceeded over several sampling times, then a corresponding fault is output.

p0492 Square-wave encoder, max. velocity difference per sampling cycle / v_dif max/samp_cyc

ENC (Lin_enc)

Can be changed: U, T	**Calculated:** CALC_MOD_REG	**Access level:** 3
Data type: FloatingPoint32	**Dynamic index:** -	**Func. diagram:** -
P-Group: Encoder	**Units group:** -	**Unit selection:** -
Not for motor type: -	**Scaling:** -	**Expert list:** 1
Min	**Max**	**Factory setting**
0.00 [m/min]	1000.00 [m/min]	0.00 [m/min]

Description: Sets the maximum permissible velocity difference within the current controller sampling time for square-wave encoders.

Dependency: Refer to: F31118, A31418

Note: For a value of 0.0, velocity change monitoring is disabled.
if the set maximum velocity difference is only exceeded for one sampling time of the current controller, then an appropriate alarm is output. However, if the maximum speed difference is exceeded over several sampling times, then a corresponding fault is output.

© Siemens AG 2012 All Rights Reserved

p0492 Maximum speed difference per sampling cycle / n_dif max/samp_cyc

VECTOR_G

Can be changed: U, T	**Calculated:** CALC_MOD_REG	**Access level:** 3
Data type: FloatingPoint32	**Dynamic index:** -	**Func. diagram:** -
P-Group: Encoder	**Units group:** -	**Unit selection:** -
Not for motor type: -	**Scaling:** -	**Expert list:** 1
Min	**Max**	**Factory setting**
0.00 [rpm]	210000.00 [rpm]	0.00 [rpm]

Description: Sets the maximum permissible speed difference within the current controller sampling time.

Dependency: Refer to: r1408

Refer to: F07902, F31118, A31418, F32118, A32418, F33118, A33418

Note: For a value of 0.0, the speed change monitoring is disabled.

The following applies for square-wave encoders:

If the speed difference exceeds the threshold value p0492, depending on p0491, either encoderless closed-loop speed/torque control is selected or the drive is powered down with fault F3x118.

The following applies for other speed encoders:

If the speed difference exceeds threshold value p0492, in order to avoid subsequent faults, the old speed actual value is kept and after time p2178 shut down with fault F07902 (motor stalled).

p0493 Zero mark selection, input terminal / ZM_sel inp_term

ENC

Can be changed: U, T	**Calculated:** -	**Access level:** 3
Data type: Integer16	**Dynamic index:** -	**Func. diagram:** -
P-Group: Encoder	**Units group:** -	**Unit selection:** -
Not for motor type: -	**Scaling:** -	**Expert list:** 1
Min	**Max**	**Factory setting**
0	8	0

Description: Sets the input terminal for selecting the reference mark via BERO/switching signal when performing referencing with several zero marks.

The encoder interface supplies the position of the reference mark, which was detected immediately after the positive edge of the BERO signal.

Value:
0: No selection via BERO
1: DI/DO 9 (X122.10/X121.8)
2: DI/DO 10 (X122.12/X121.10)
3: DI/DO 11 (X122.13/X121.11)
4: DI/DO 13 (X132.10/X131.2)
5: DI/DO 14 (X132.12/X131.4)
6: DI/DO 15 (X132.13/X131.5)
7: DI/DO 8 (X122.9/X121.7)
8: DI/DO 12 (X132.9/X131.1)

Notice: For Cx32, NX10 and NX15, only DI/DO 9, 10, 11 can be selected as fast inputs (refer to the Equipment Manual).

To the terminal designation:

The first designation is valid for CU320, the second for CU310.

Note: Refer to the encoder interface for PROFIdrive.

The terminal must be set as input (p0728).

For p0493 = 0 (factory setting) the following applies:

- there is no logic operation between the reference mark search and an input signal.

For p0493 > 0, the following applies:

- the positive edge of the input signal is evaluated. If the negative edge is to be evaluated, signal inversion must be parameterized via p0490.

- if a parameter change is rejected, a check should be performed as to whether the input terminal is already being used in p0580, p0680, p2517, or p2518.

© Siemens AG 2012 All Rights Reserved

p0493[0...n] Zero mark selection, input terminal / ZM_sel inp_term

VECTOR_G	**Can be changed:** U, T	**Calculated:** -	**Access level:** 3
	Data type: Integer16	**Dynamic index:** EDS, p0140	**Func. diagram:** -
	P-Group: Encoder	**Units group:** -	**Unit selection:** -
	Not for motor type: -	**Scaling:** -	**Expert list:** 1
	Min	**Max**	**Factory setting**
	0	8	0

Description: Sets the input terminal for selecting the reference mark via BERO/switching signal when performing referencing with several zero marks.

The encoder interface supplies the position of the reference mark, which was detected immediately after the positive edge of the BERO signal.

Value:
0: No selection via BERO
1: DI/DO 9 (X122.10/X121.8)
2: DI/DO 10 (X122.12/X121.10)
3: DI/DO 11 (X122.13/X121.11)
4: DI/DO 13 (X132.10/X131.2)
5: DI/DO 14 (X132.12/X131.4)
6: DI/DO 15 (X132.13/X131.5)
7: DI/DO 8 (X122.9/X121.7)
8: DI/DO 12 (X132.9/X131.1)

Notice: For Cx32, NX10 and NX15, only DI/DO 9, 10, 11 can be selected as fast inputs (refer to the Equipment Manual).

To the terminal designation:

The first designation is valid for CU320, the second for CU310.

Note: Refer to the encoder interface for PROFIdrive.

The terminal must be set as input (p0728).

For p0493 = 0 (factory setting) the following applies:

- there is no logic operation between the reference mark search and an input signal.

For p0493 > 0, the following applies:

- the positive edge of the input signal is evaluated. If the negative edge is to be evaluated, signal inversion must be parameterized via p0490.

- if a parameter change is rejected, a check should be performed as to whether the input terminal is already being used in p0580, p0680, p2517, or p2518.

p0494[0...n] Equivalent zero mark, input terminal / ZM_equiv input

VECTOR_G	**Can be changed:** U, T	**Calculated:** -	**Access level:** 3
	Data type: Integer16	**Dynamic index:** EDS, p0140	**Func. diagram:** -
	P-Group: Encoder	**Units group:** -	**Unit selection:** -
	Not for motor type: -	**Scaling:** -	**Expert list:** 1
	Min	**Max**	**Factory setting**
	0	8	0

Description: Selects the input terminal for connecting an equivalent zero mark (external encoder zero mark).

Value:
0: No equivalent zero mark (evaluation of the encoder zero mark)
1: DI/DO 9 (X122.10/X121.8)
2: DI/DO 10 (X122.12/X121.10)
3: DI/DO 11 (X122.13/X121.11)
4: DI/DO 13 (X132.10/X131.2)
5: DI/DO 14 (X132.12/X131.4)
6: DI/DO 15 (X132.13/X131.5)
7: DI/DO 8 (X122.9/X121.7)
8: DI/DO 12 (X132.9/X131.1)

Notice: For Cx32, NX10 and NX15, only DI/DO 9, 10, 11 can be selected as fast inputs (refer to the Equipment Manual).

For p0494 = 0 (factory setting), the setting in p0495 is effective.

To the terminal designation:

The first designation is valid for CU320, the second for CU310.

© Siemens AG 2012 All Rights Reserved

Note: Refer to the encoder interface for PROFIdrive.
The terminal must be set as input.

p0495 Equivalent zero mark, input terminal / ZM_equiv input

ENC

Can be changed: U, T	**Calculated:** -	**Access level:** 3
Data type: Integer16	**Dynamic index:** -	**Func. diagram:** 4735
P-Group: Encoder	**Units group:** -	**Unit selection:** -
Not for motor type: -	**Scaling:** -	**Expert list:** 1
Min	**Max**	**Factory setting**
0	8	0

Description: Selects the input terminal for connecting an equivalent zero mark (external encoder zero mark).

Value:
0: No equivalent zero mark (evaluation of the encoder zero mark)
1: DI/DO 9 (X122.10/X121.8)
2: DI/DO 10 (X122.12/X121.10)
3: DI/DO 11 (X122.13/X121.11)
4: DI/DO 13 (X132.10/X131.2)
5: DI/DO 14 (X132.12/X131.4)
6: DI/DO 15 (X132.13/X131.5)
7: DI/DO 8 (X122.9/X121.7)
8: DI/DO 12 (X132.9/X131.1)

Notice: For Cx32, NX10 and NX15, only DI/DO 9, 10, 11 can be selected as fast inputs (refer to the Equipment Manual).
For p0494 > 0, the setting in p0494 and p0495 is invalid.
To the terminal designation:
The first designation is valid for CU320, the second for CU310.

Note: Refer to the encoder interface for PROFIdrive.
The terminal must be set as input.
For p0495 = 0 (factory setting), the encoder zero mark is evaluated as zero mark.
For p0495 > 0, the following applies:
Depending on the direction of motion, the positive or negative edge at the appropriate input is evaluated.
- increasing position actual values (r0482) --> the 0/1 edge is evaluated.
- decreasing position actual values (r0482) --> the 1/0 edge is evaluated.
Only one zero mark is supported. If function 2, 3 or 4 is selected, this results in a fault message in Gn_ZSW.
The inversion of the inputs via p0490 affects the function "referencing with equivalent zero mark". This is the reason that the edge evaluation is interchanged as a function of the direction of motion.
An input can only be assigned to one encoder as measuring probe 1, 2 or equivalent zero mark. Exception: The same encoder can be simultaneously used as measuring probe and equivalent zero mark as both functions cannot be simultaneously requested.

p0495[0...2] Equivalent zero mark, input terminal / ZM_equiv input

VECTOR_G

Can be changed: U, T	**Calculated:** -	**Access level:** 3
Data type: Integer16	**Dynamic index:** -	**Func. diagram:** 4735
P-Group: Encoder	**Units group:** -	**Unit selection:** -
Not for motor type: -	**Scaling:** -	**Expert list:** 1
Min	**Max**	**Factory setting**
0	8	0

Description: Selects the input terminal for connecting an equivalent zero mark (external encoder zero mark).

Value:
0: No equivalent zero mark (evaluation of the encoder zero mark)
1: DI/DO 9 (X122.10/X121.8)
2: DI/DO 10 (X122.12/X121.10)
3: DI/DO 11 (X122.13/X121.11)
4: DI/DO 13 (X132.10/X131.2)
5: DI/DO 14 (X132.12/X131.4)
6: DI/DO 15 (X132.13/X131.5)
7: DI/DO 8 (X122.9/X121.7)
8: DI/DO 12 (X132.9/X131.1)

© Siemens AG 2012 All Rights Reserved

Index: [0] = Encoder 1
[1] = Encoder 2
[2] = Encoder 3

Dependency: Refer to: p0494

Notice: For Cx32, NX10 and NX15, only DI/DO 9, 10, 11 can be selected as fast inputs (refer to the Equipment Manual).
For p0494 > 0, the setting in p0494 and p0495 is invalid.
To the terminal designation:
The first designation is valid for CU320, the second for CU310.

Note: Refer to the encoder interface for PROFIdrive.
The terminal must be set as input.
For p0495 = 0 (factory setting), the encoder zero mark is evaluated as zero mark.
For p0495 > 0, the following applies:
Depending on the direction of motion, the positive or negative edge at the appropriate input is evaluated.
- increasing position actual values (r0482) --> the 0/1 edge is evaluated.
- decreasing position actual values (r0482) --> the 1/0 edge is evaluated.
Only one zero mark is supported. If function 2, 3 or 4 is selected, this results in a fault message in Gn_ZSW.
The inversion of the inputs via p0490 affects the function "referencing with equivalent zero mark". This is the reason that the edge evaluation is interchanged as a function of the direction of motion.
An input can only be assigned to one encoder as measuring probe 1, 2 or equivalent zero mark. Exception: The same encoder can be simultaneously used as measuring probe and equivalent zero mark as both functions cannot be simultaneously requested.

p0496 Encoder diagnostic signal selection / Enc diag select

ENC

Can be changed: U, T	**Calculated:** -	**Access level:** 4
Data type: Integer16	**Dynamic index:** -	**Func. diagram:** -
P-Group: Encoder	**Units group:** -	**Unit selection:** -
Not for motor type: -	**Scaling:** -	**Expert list:** 1
Min	**Max**	**Factory setting**
0	86	0

Description: Selects the trace signal to be output in r0497, r0498 and r0499 for encoder diagnostics.

Value:
0: Inactive
1: r0497: Mechanical revolution
10: r0498: Raw value, track A, r0499: Raw value, track B
11: r0498: Fine position X (-A/2), r0499: Fine position Y (-B/2)
12: r0498: Fine position Phi, r0499: -
13: r0498: Offset correction X, r0499: Offset correction Y
14: r0498: Phase correction X, r0499: Amplitude correction Y
15: r0498: Cubic correction X, r0499: Fine position X
16: r0498: oversampling channel A, r0499: oversampling channel B
17: r0498: fan-out, amount, r0499: fan-out, number
18: r0498: Oversampling angle, r0499: Oversampling amount
20: r0498: Raw value, track C, r0499: Raw value, track D
21: r0498: CD position X (-D/2), r0499: CD position Y (C/2)
22: r0498: CD position Phi, r0499: CD pos. Phi - mech. revolution
23: r0497: Zero mark status
24: r0498: Raw value, track R, r0499: Zero mark status
25: r0498: Raw value, track A, r0499: Raw value, track R
30: r0497: Absolute position serial
31: r0497: Absolute position, incremental
32: r0497: Zero mark position
33: r0497: Correction absolute position difference
40: r0498: Raw temperature, r0499: Temperature in 0.1 °C
41: r0498: Resistance in 0.1 Ohm, r0499: Temperature in 0.1 °C
42: r0497: Resistance 2500 Ohm
51: r0497: Absolute speed difference (dn/dt)
52: r0497: Xact1 corrected quadrants
60: Analog sensor: r0498: raw val chann. A, r0499: raw val chann. B
61: Analog sensor: r0498: fine pos chann. A,r0499: fine pos chann. B

© Siemens AG 2012 All Rights Reserved

62: Analog sensor: r0498: Fine pos before characteristic, r0499: -
70: Resolver: r0498: Transformation ratio, r0499: phase
80: Spindle: r0498: Sensor S1 (raw), r0499: Sensor S4 (raw)
81: Spindle: r0498: Sensor S5 (raw), r0499: -
85: Spindle: r0498: Sensor S1 (cal), r0499: Sensor S4 (cal)
86: Spindle: r0498: Sensor S5 (cal), r0499: -

Dependency: Refer to: r0497, r0498, r0499

Notice: The setting option depends on the following properties:

Sensor Module type, hardware version, firmware version (Sensor Module and Control Units), order number (last digit).

Not all combinations are supported.

Note: Re p0496 = 1: 360 ° <--> 2^32

Re p0496 = 10 (resolver): 2900 mV <--> 26214 dec

Re p0496 = 10, 20 (sin/cos 1 Vpp, EnDat): 500 mV <--> 21299 dec

Re p0496 = 11 (resolver): 2900 mV <--> 13107 dec, internal processor offset is corrected

Re p0496 = 11, 21 (sin/cos 1 Vpp, EnDat): 500 mV <--> 10650 dec, internal processor offset is corrected

Re p0496 = 12: 180 ° fine position <--> 32768 dec

Re p0496 = 13 (resolver): 2900 mV <--> 13107 dec

Re p0496 = 13 (sin/cos 1 Vpp, EnDat): 500 mV <--> 10650 dec

Re p0496 = 14: 1 ° <--> 286 dec, 100% <--> 16384 dec

Re p0496 = 15: 100 % <--> 16384 dec

Re p0496 = 16: (resolver): channel A: 2900 mV <--> 26214 dec, channel B: 2900 mV <--> 26214 dec

Re p0496 = 16: (sin/cos 1 Vpp, EnDat) channel A: 500 mV <--> 21299 dec, channel B: 500 mV <--> 21299 dec

Re p0496 = 17 (resolver): absolute value: 2900 mV <--> 13107 dec, number: 1 ... 8

Re p0496 = 17 (sin/cos 1 Vpp, EnDat): absolute value 500 mV <--> 10650 dec, number: 1 ... 8

Re p0496 = 18 (resolver): angle: signal period <--> 2^16, absolute value: 2900 mV <--> 13107 dec

Re p0496 = 18 (sin/cos 1 Vpp, EnDat): angle: signal period <--> 2^16, absolute value: 500 mV <--> 10650 dec

Re p0496 = 22: 180 ° <--> 32768 dec

Re p0496 = 23, 24: r0497.31 (r0499.15) set for at least 1 current controller cycle when encoder zero mark detected

Re p0496 = 24, 25: 500 mV <--> 21299 dec

Re p0496 = 30: Rotary: 1 singleturn measuring step <--> 1 dec, linear: 1 measuring step <--> 1 dec

Re p0496 = 31: Absolute position, incremental in 1/4 encoder pulses

Re p0496 = 32: Zero mark position in 1/4 encoder pulses

Re p0496 = 33: counter offset absolute value in 1/4 encoder pulses

Re p0496 = 40: r0498 <--> (R_KTY/1 kOhm - 0.9) * 32768

Re p0496 = 42: 2500 Ohm <--> 2^32

Re p0496 = 51: 1 rpm <--> 1000 dec

Re p0496 = 52: In 1/4 encoder pulses

Re p0496 = 60: voltage, channel A in mV, voltage, channel B in mV

Re p0496 = 61: Channel A: encoder periods <--> 2^16, channel B: encoder periods <--> 2^16

Re p0496 = 62: encoder periods <--> 2^16

Re p0496 = 70: r: 100% <--> 10000 dec, phase: 180 ° <--> 18000 dec

Re p0496 = 80, 81, 85, 86: 1V <--> 1000 inc

p0496[0...2] Encoder diagnostic signal selection / Enc diag select

VECTOR_G

Can be changed: U, T	**Calculated:** -	**Access level:** 4
Data type: Integer16	**Dynamic index:** -	**Func. diagram:** -
P-Group: Encoder	**Units group:** -	**Unit selection:** -
Not for motor type: -	**Scaling:** -	**Expert list:** 1
Min	**Max**	**Factory setting**
0	86	0

Description: Selects the trace signal to be output in r0497, r0498 and r0499 for encoder diagnostics.

Value:
0: Inactive
1: r0497: Mechanical revolution

© Siemens AG 2012 All Rights Reserved

10: r0498: Raw value, track A, r0499: Raw value, track B
11: r0498: Fine position X (-A/2), r0499: Fine position Y (-B/2)
12: r0498: Fine position Phi, r0499: -
13: r0498: Offset correction X, r0499: Offset correction Y
14: r0498: Phase correction X, r0499: Amplitude correction Y
15: r0498: Cubic correction X, r0499: Fine position X
16: r0498: oversampling channel A, r0499: oversampling channel B
17: r0498: fan-out, amount, r0499: fan-out, number
18: r0498: Oversampling angle, r0499: Oversampling amount
20: r0498: Raw value, track C, r0499: Raw value, track D
21: r0498: CD position X (-D/2), r0499: CD position Y (C/2)
22: r0498: CD position Phi, r0499: CD pos. Phi - mech. revolution
23: r0497: Zero mark status
24: r0498: Raw value, track R, r0499: Zero mark status
25: r0498: Raw value, track A, r0499: Raw value, track R
30: r0497: Absolute position serial
31: r0497: Absolute position, incremental
32: r0497: Zero mark position
33: r0497: Correction absolute position difference
40: r0498: Raw temperature, r0499: Temperature in 0.1 °C
41: r0498: Resistance in 0.1 Ohm, r0499: Temperature in 0.1 °C
42: r0497: Resistance 2500 Ohm
51: r0497: Absolute speed difference (dn/dt)
52: r0497: Xact1 corrected quadrants
60: Analog sensor: r0498: raw val chann. A, r0499: raw val chann. B
61: Analog sensor: r0498: fine pos chann. A,r0499: fine pos chann. B
62: Analog sensor: r0498: Fine pos before characteristic, r0499: -
70: Resolver: r0498: Transformation ratio, r0499: phase
80: Spindle: r0498: Sensor S1 (raw), r0499: Sensor S4 (raw)
81: Spindle: r0498: Sensor S5 (raw), r0499: -
85: Spindle: r0498: Sensor S1 (cal), r0499: Sensor S4 (cal)
86: Spindle: r0498: Sensor S5 (cal), r0499: -

Index: [0] = Encoder 1
[1] = Encoder 2
[2] = Encoder 3

Dependency: Refer to: r0497, r0498, r0499

Notice: The setting option depends on the following properties:

Sensor Module type, hardware version, firmware version (Sensor Module and Control Units), order number (last digit).

Not all combinations are supported.

Note: Re p0496 = 1: 360 ° <--> 2^32

Re p0496 = 10 (resolver): 2900 mV <--> 26214 dec

Re p0496 = 10, 20 (sin/cos 1 Vpp, EnDat): 500 mV <--> 21299 dec

Re p0496 = 11 (resolver): 2900 mV <--> 13107 dec, internal processor offset is corrected

Re p0496 = 11, 21 (sin/cos 1 Vpp, EnDat): 500 mV <--> 10650 dec, internal processor offset is corrected

Re p0496 = 12: 180 ° fine position <--> 32768 dec

Re p0496 = 13 (resolver): 2900 mV <--> 13107 dec

Re p0496 = 13 (sin/cos 1 Vpp, EnDat): 500 mV <--> 10650 dec

Re p0496 = 14: 1 ° <--> 286 dec, 100% <--> 16384 dec

Re p0496 = 15: 100 % <--> 16384 dec

Re p0496 = 16: (resolver): channel A: 2900 mV <--> 26214 dec, channel B: 2900 mV <--> 26214 dec

Re p0496 = 16: (sin/cos 1 Vpp, EnDat) channel A: 500 mV <--> 21299 dec, channel B: 500 mV <--> 21299 dec

Re p0496 = 17 (resolver): absolute value: 2900 mV <--> 13107 dec, number: 1 ... 8

Re p0496 = 17 (sin/cos 1 Vpp, EnDat): absolute value 500 mV <--> 10650 dec, number: 1 ... 8

Re p0496 = 18 (resolver): angle: signal period <--> 2^16, absolute value: 2900 mV <--> 13107 dec

Re p0496 = 18 (sin/cos 1 Vpp, EnDat): angle: signal period <--> 2^16, absolute value: 500 mV <--> 10650 dec

Re p0496 = 22: 180 ° <--> 32768 dec

Re p0496 = 23, 24: r0497.31 (r0499.15) set for at least 1 current controller cycle when encoder zero mark detected

Re p0496 = 24, 25: 500 mV <--> 21299 dec

© Siemens AG 2012 All Rights Reserved

Re p0496 = 30: Rotary: 1 singleturn measuring step <--> 1 dec, linear: 1 measuring step <--> 1 dec
Re p0496 = 31: Absolute position, incremental in 1/4 encoder pulses
Re p0496 = 32: Zero mark position in 1/4 encoder pulses
Re p0496 = 33: counter offset absolute value in 1/4 encoder pulses
Re p0496 = 40: r0498 <--> (R_KTY/1 kOhm - 0.9) * 32768
Re p0496 = 42: 2500 Ohm <--> 2^32
Re p0496 = 51: 1 rpm <--> 1000 dec
Re p0496 = 52: In 1/4 encoder pulses
Re p0496 = 60: voltage, channel A in mV, voltage, channel B in mV
Re p0496 = 61: Channel A: encoder periods <--> 2^16, channel B: encoder periods <--> 2^16
Re p0496 = 62: encoder periods <--> 2^16
Re p0496 = 70: r: 100% <--> 10000 dec, phase: 180 ° <--> 18000 dec
Re p0496 = 80, 81, 85, 86: 1V <--> 1000 inc

r0497 Encoder diagnostic signal double word / Enc diag DW

ENC

Can be changed: -	**Calculated:** -	**Access level:** 4
Data type: Unsigned32	**Dynamic index:** -	**Func. diagram:** -
P-Group: Encoder	**Units group:** -	**Unit selection:** -
Not for motor type: -	**Scaling:** -	**Expert list:** 1
Min	**Max**	**Factory setting**
-	-	-

Description: Displays the trace signal for encoder diagnostics (double word).
The signal to be output is selected in p0496.

Dependency: Refer to: p0496, r0498, r0499

r0497[0...2] CO: Encoder diagnostic signal double word / Enc diag DW

VECTOR_G

Can be changed: -	**Calculated:** -	**Access level:** 4
Data type: Unsigned32	**Dynamic index:** -	**Func. diagram:** -
P-Group: Encoder	**Units group:** -	**Unit selection:** -
Not for motor type: -	**Scaling:** -	**Expert list:** 1
Min	**Max**	**Factory setting**
-	-	-

Description: Displays the trace signal for encoder diagnostics (double word).
The signal to be output is selected in p0496.

Index: [0] = Encoder 1
[1] = Encoder 2
[2] = Encoder 3

Dependency: Refer to: p0496, r0498, r0499

r0498 Encoder diagnostic signal low word / Enc diag low word

ENC

Can be changed: -	**Calculated:** -	**Access level:** 4
Data type: Integer16	**Dynamic index:** -	**Func. diagram:** -
P-Group: Encoder	**Units group:** -	**Unit selection:** -
Not for motor type: -	**Scaling:** -	**Expert list:** 1
Min	**Max**	**Factory setting**
-	-	-

Description: Displays the trace signal for encoder diagnostics (low component).
The signal to be output is selected in p0496.

Dependency: Refer to: p0496, r0497, r0499

© Siemens AG 2012 All Rights Reserved

r0498[0...2] CO: Encoder diagnostic signal low word / Enc diag low word

VECTOR_G	**Can be changed:** -	**Calculated:** -	**Access level:** 4
	Data type: Integer16	**Dynamic index:** -	**Func. diagram:** -
	P-Group: Encoder	**Units group:** -	**Unit selection:** -
	Not for motor type: -	**Scaling:** -	**Expert list:** 1
	Min	**Max**	**Factory setting**
	-	-	-

Description: Displays the trace signal for encoder diagnostics (low component).
The signal to be output is selected in p0496.

Index: [0] = Encoder 1
[1] = Encoder 2
[2] = Encoder 3

Dependency: Refer to: p0496, r0497, r0499

r0499 Encoder diagnostic signal high word / Enc diag high word

ENC	**Can be changed:** -	**Calculated:** -	**Access level:** 4
	Data type: Integer16	**Dynamic index:** -	**Func. diagram:** -
	P-Group: Encoder	**Units group:** -	**Unit selection:** -
	Not for motor type: -	**Scaling:** -	**Expert list:** 1
	Min	**Max**	**Factory setting**
	-	-	-

Description: Displays the trace signal for encoder diagnostics (high component).
The signal to be output is selected in p0496.

Dependency: Refer to: p0496, r0497, r0498

r0499[0...2] CO: Encoder diagnostic signal high word / Enc diag high word

VECTOR_G	**Can be changed:** -	**Calculated:** -	**Access level:** 4
	Data type: Integer16	**Dynamic index:** -	**Func. diagram:** -
	P-Group: Encoder	**Units group:** -	**Unit selection:** -
	Not for motor type: -	**Scaling:** -	**Expert list:** 1
	Min	**Max**	**Factory setting**
	-	-	-

Description: Displays the trace signal for encoder diagnostics (high component).
The signal to be output is selected in p0496.

Index: [0] = Encoder 1
[1] = Encoder 2
[2] = Encoder 3

Dependency: Refer to: p0496, r0497, r0498

p0500 Technology application / Tec application

VECTOR_G	**Can be changed:** C2(1, 5), T	**Calculated:** -	**Access level:** 2
	Data type: Integer16	**Dynamic index:** -	**Func. diagram:** -
	P-Group: Applications	**Units group:** -	**Unit selection:** -
	Not for motor type: -	**Scaling:** -	**Expert list:** 1
	Min	**Max**	**Factory setting**
	0	2	1

Description: Sets the technology application.
The parameter influences the calculation of open-loop and closed-loop control parameters that is e.g. initiated using p0578.

Value:
0: Standard drive (VECTOR)
1: Pumps and fans
2: Sensorless closed-loop control down to f = 0 (passive loads)

Dependency: Refer to: p2175, p2177

© Siemens AG 2012 All Rights Reserved

Note: The calculation of parameters dependent on the technology application can be called up as follows:
- when exiting quick commissioning using p3900 > 0
- when writing p0340 = 1, 3, 5
- when writing p0578 = 1

For p0500 = 0 and when the calculation is initiated, the following parameters are set:
p1574 = 10 V (for separately-excited synchronous motors: 20 V)
p1750.2 = 0
p1802 = 4 (SVM/FLB without overcontrol)
p1803 = 106 %
For p0500 = 1 and when the calculation is initiated, the following parameters are set:
p1574 = 2 V (for separately-excited synchronous motors: 4 V)
p1750.2 = 0
p1802 = 9 (edge modulation), if r0192.0 = 1
p1802 = 4, if r0192.0 = 0
p1803 = 106 %
For p0500 = 2 and when the calculation is initiated, the following parameters are set:
p1574 = 2 V (for separately-excited synchronous motors: 4 V)
p1750.2 = 1: Encoderless control of the induction motor is effective down to zero frequency.
This operating mode is possible for passive loads. These include applications where the load does not generate regenerative torque when breaking away and the motor comes to a standstill (zero speed) itself when the pulses are inhibited.
p1802 = 4 (SVM/FLB without overcontrol)
p1803 = 106 %
The setting of p1750 is only relevant for induction motors.
p1802 and p1803 are only changed, in all cases, if a sine-wave output filter (p0230 = 3, 4) has not been selected.

p0505 Selecting the system of units / Unit sys select

B_INF, ENC, VECTOR_G

Can be changed: C2(5)	**Calculated:** -	**Access level:** 1
Data type: Integer16	**Dynamic index:** -	**Func. diagram:** -
P-Group: Applications	**Units group:** -	**Unit selection:** -
Not for motor type: -	**Scaling:** -	**Expert list:** 1
Min	**Max**	**Factory setting**
1	4	1

Description: Sets the actual system of units.

Value:
1: SI system of units
2: System of units, referred/SI
3: US system of units
4: System of units, referred/US

Dependency: The parameter cannot be changed when master control is active.

Caution: If a per unit representation is selected and if the reference parameters (e.g. p2000) are subsequently changed, then the physical significance of several control parameters is also adapted at the same time. As a consequence, the control behavior can change (see p1576, p1621, p1744, p1752, p1755 and p1609, p1612, p1619, p1620).

Note: Reference parameter for the unit system % are, for example, p2000 ... p2004. Depending on what has been selected, these are displayed using either SI or US units.

p0528 Controller gain, system of units / Ctrl_gain unit_sys

ENC

Can be changed: C2(5)	**Calculated:** -	**Access level:** 4
Data type: Integer16	**Dynamic index:** -	**Func. diagram:** -
P-Group: Applications	**Units group:** -	**Unit selection:** -
Not for motor type: -	**Scaling:** -	**Expert list:** 1
Min	**Max**	**Factory setting**
0	1	0

Description: Sets the system of units for the controller gains.

© Siemens AG 2012 All Rights Reserved

Value: 0: Representation, physical/% (p0505)
1: Representation, no dimensions (referred)

Note: For p0528 = 0 (physical/%), the following applies:
Using p0505, the dependent parameters can be changed over between physical and % representation.
For SERVO (r0107) the following applies:
The parameter is pre-assigned a value of 0 and cannot be changed.

p0528 Controller gain, system of units / Ctrl_gain unit_sys

VECTOR_G

Can be changed: C2(5)	**Calculated:** -	**Access level:** 4
Data type: Integer16	**Dynamic index:** -	**Func. diagram:** -
P-Group: Applications	**Units group:** -	**Unit selection:** -
Not for motor type: -	**Scaling:** -	**Expert list:** 1
Min	**Max**	**Factory setting**
0	1	1

Description: Sets the system of units for the controller gains.

Value: 0: Representation, physical/% (p0505)
1: Representation, no dimensions (referred)

Note: For VECTOR (r0107) the following applies:
The parameter is pre-assigned a value of 1 and cannot be changed.

p0530[0...n] Bearing version selection / Bearing vers sel

VECTOR_G

Can be changed: C2(1, 3)	**Calculated:** -	**Access level:** 1
Data type: Unsigned16	**Dynamic index:** MDS, p0130	**Func. diagram:** -
P-Group: Motor	**Units group:** -	**Unit selection:** -
Not for motor type: FEM	**Scaling:** -	**Expert list:** 1
Min	**Max**	**Factory setting**
0	104	0

Description: Sets the bearing version.
Corresponding to the bearing version entered, its code number (p0531) is automatically set.
0 = No selection
1 = Manual entry
101 = STANDARD
102 = PERFORMANCE
103 = HIGH PERFORMANCE
104 = ADVANCED LIFETIME

Dependency: Refer to: p0301, p0531, p0532, p1082

Caution: For p0530 = 101, 102, 103, 104, the maximum bearing speed (p0532) is write protected. Write protection is withdrawn with p0530 = 1.

Notice: If p0530 is changed during quick commissioning (p0010 = 1), then the maximum speed p1082, which is also associated with quick commissioning, is pre-assigned appropriately. This is not the case when commissioning the motor (p0010 = 3). The maximum speed of the bearing is factored into the limit for the maximum speed p1082.

Note: For a motor with DRIVE-CLiQ, p0530 can only be set to 1.

p0531[0...n] Bearing code number selection / Bearing codeNo sel

VECTOR_G

Can be changed: C2(3)	**Calculated:** -	**Access level:** 1
Data type: Unsigned16	**Dynamic index:** MDS, p0130	**Func. diagram:** -
P-Group: Motor	**Units group:** -	**Unit selection:** -
Not for motor type: FEM	**Scaling:** -	**Expert list:** 1
Min	**Max**	**Factory setting**
0	65535	0

Description: Display and setting the code number of the bearing.
When setting p0301 and p0530 the code number is automatically preassigned and is write protected. The information in p0530 should be observed when removing write protection.

Dependency: Refer to: p0301, p0530, p0532, p1082

© Siemens AG 2012 All Rights Reserved

Notice: If p0531 is changed during quick commissioning (p0010 = 1), then the maximum speed p1082, which is also associated with quick commissioning, is pre-assigned appropriately. This is not the case when commissioning the motor (p0010 = 3). The maximum speed of the bearing is factored into the limit for the maximum speed p1082.

Note: p0531 cannot be changed on a motor with DRIVE-CLiQ.

p0532[0...n] Bearing maximum speed / Bearing n_max

VECTOR_G

Can be changed: C2(1, 3)	**Calculated:** -	**Access level:** 2
Data type: FloatingPoint32	**Dynamic index:** MDS, p0130	**Func. diagram:** -
P-Group: Motor	**Units group:** -	**Unit selection:** -
Not for motor type: FEM	**Scaling:** -	**Expert list:** 1
Min	**Max**	**Factory setting**
0.0 [rpm]	210000.0 [rpm]	0.0 [rpm]

Description: Sets the maximum speed of the bearing.

Dependency: Refer to: p0301, p0530, p1082

Caution: This parameter is pre-assigned in the case of motors from the motor list (p0301) if a bearing version (p0530) is selected. When selecting a catalog motor, this parameter cannot be changed (write protection). The information in p0530 should be observed when removing write protection.

Notice: If p0532 is changed during quick commissioning (p0010 = 1), then the maximum speed p1082, which is also associated with quick commissioning, is pre-assigned appropriately. This is not the case when commissioning the motor (p0010 = 3). The maximum speed of the bearing is factored into the limit for the maximum speed p1082.

r0565[0...15] CO: Probe time stamp / Probe time stamp

CU_G130_DP, CU_G130_PN, CU_G150_DP, CU_G150_PN

Can be changed: -	**Calculated:** -	**Access level:** 3
Data type: Unsigned16	**Dynamic index:** -	**Func. diagram:** -
P-Group: Displays, signals	**Units group:** -	**Unit selection:** -
Not for motor type: -	**Scaling:** -	**Expert list:** 1
Min	**Max**	**Factory setting**
-	-	-

Description: Display parameters for MT_ZS_1 to MT_ZS_16

Displays the measuring time for an edge at the digital input for the "central measuring probe evaluation stage3" function.

The measuring time is specified as 16-bit value with a resolution of 0.25 µs.

Priority: MT1..MT8, oldest...newest time stamp

r0566[0...3] CO: Probe time stamp reference / Prb timestamp ref

CU_G130_DP, CU_G130_PN, CU_G150_DP, CU_G150_PN

Can be changed: -	**Calculated:** -	**Access level:** 3
Data type: Unsigned16	**Dynamic index:** -	**Func. diagram:** -
P-Group: Displays, signals	**Units group:** -	**Unit selection:** -
Not for motor type: -	**Scaling:** -	**Expert list:** 1
Min	**Max**	**Factory setting**
-	-	-

Description: Display parameters for MT_ZSB1 to MT_ZSB4

r0567 CO: Probe diagnostics word / Probe diag word

CU_G130_DP, CU_G130_PN, CU_G150_DP, CU_G150_PN

Can be changed: -	**Calculated:** -	**Access level:** 3
Data type: Unsigned16	**Dynamic index:** -	**Func. diagram:** -
P-Group: -	**Units group:** -	**Unit selection:** -
Not for motor type: -	**Scaling:** -	**Expert list:** 1
Min	**Max**	**Factory setting**
-	-	-

Description: Display parameters for MT_DIAG

© Siemens AG 2012 All Rights Reserved

p0570 Inhibit list values effective number / Inhib list no

VECTOR_G

Can be changed: U, T	**Calculated:** -	**Access level:** 2
Data type: Unsigned8	**Dynamic index:** -	**Func. diagram:** -
P-Group: Applications	**Units group:** -	**Unit selection:** -
Not for motor type: -	**Scaling:** -	**Expert list:** 1
Min	**Max**	**Factory setting**
0	50	0

Description: Sets the number of parameters in the inhibit list p0571 that should be withdrawn from the automatic motor and closed-loop control parameter calculation (refer to p0340, p0578), starting from index 0.

Note: Defines the number of entries in p0571 that should be taken into account. This means that a value of 0 de-activates the complete list.

p0571[0...49] Inhibit list, motor/closed-loop control parameter calculation / Inhib list calc

VECTOR_G

Can be changed: U, T	**Calculated:** -	**Access level:** 2
Data type: Integer16	**Dynamic index:** -	**Func. diagram:** -
P-Group: Applications	**Units group:** -	**Unit selection:** -
Not for motor type: -	**Scaling:** -	**Expert list:** 1
Min	**Max**	**Factory setting**
0	2142	0

Description: The inhibit list contains parameters that should be withdrawn from the automatic motor and closed-loop control parameter calculation (p0340, p0578).

Value:
0: No parameter
600: Motor temperature sensor
640: Current limit
1082: Maximum speed
1460: Speed controller P gain
1462: Speed controller integral time
1470: Speed controller P gain, encoderless
1472: Speed controller integral time, encoderless
1520: Torque limit upper/motoring
1521: Torque limit lower/regenerative
1530: Power limit motoring
1531: Power limit regenerative
1590: Flux controller P gain
1592: Flux controller integral time
2141: Speed threshold 1
2142: Hysteresis speed 1

Note: p0570 defines the number of entries (starting at index 0) for which the inhibit should apply. p0572 can be used to define for which drive data sets the inhibit list should apply.

If a motor data set is entered into a parameter number, then this is not overwritten as soon as only one drive data set refers to the motor data set (p0186).

p0572[0...n] Activate/de-activate inhibit list / Inh_list act/deact

VECTOR_G

Can be changed: U, T	**Calculated:** -	**Access level:** 2
Data type: Integer16	**Dynamic index:** DDS, p0180	**Func. diagram:** -
P-Group: Applications	**Units group:** -	**Unit selection:** -
Not for motor type: -	**Scaling:** -	**Expert list:** 1
Min	**Max**	**Factory setting**
0	1	0

Description: Setting for activating/de-activating the inhibit list.

Depending on the setting, the parameters of the inhibit list (p0571) should be overwritten when calculating the motor and closed-loop control parameters for the particular drive data set (DDS).

Value:
0: No
1: Yes

© Siemens AG 2012 All Rights Reserved

Note: If value = 0:
The automatic calculation (p0340, p0578) also overwrites the parameters of the inhibit list (p0571).
If value = 1:
The automatic calculation (p0340, p0578) does not overwrite the parameters of the inhibit list (p0571).

p0573 Inhibit automatic reference value calculation / Inhibit calc

B_INF, VECTOR_G

Can be changed: U, T	**Calculated:** -	**Access level:** 2
Data type: Integer16	**Dynamic index:** -	**Func. diagram:** -
P-Group: Applications	**Units group:** -	**Unit selection:** -
Not for motor type: -	**Scaling:** -	**Expert list:** 1
Min	**Max**	**Factory setting**
0	1	0

Description: Setting to inhibit the calculation of reference parameters (e.g. p2000) when automatically calculating the motor and closed-loop control parameters (p0340, p3900).

Value:
0: No
1: Yes

Notice: The inhibit for the reference value calculation is canceled when new motor parameters (e.g. p0305) are entered and only one drive data set exists (p0180 = 1). This is the case during initial commissioning.
Once the motor and control parameters have been calculated (p0340, p3900), the inhibit for the reference value calculation is automatically re-activated.

Note: If value = 0:
The automatic calculation (p0340, p3900) overwrites the reference parameters.
If value = 1:
The automatic calculation (p0340, p3900) does not overwrite the reference parameters.

p0578[0...n] Calculate technology-dependent parameters / Calc tec par

VECTOR_G

Can be changed: C2(5), T	**Calculated:** -	**Access level:** 2
Data type: Integer16	**Dynamic index:** DDS, p0180	**Func. diagram:** -
P-Group: Applications	**Units group:** -	**Unit selection:** -
Not for motor type: -	**Scaling:** -	**Expert list:** 1
Min	**Max**	**Factory setting**
0	1	0

Description: This parameter is used to calculate all parameters that depend on the technology of the application (p0500).
All of the parameters are calculated that can also be determined using p0340 = 5.

Value:
0: No calculation
1: Complete calculation

Note: At the end of the calculations, p0578 is automatically set to 0.

p0595 Technological unit selection / Tech unit select

VECTOR_G (Tech_ctrl)

Can be changed: C2(5)	**Calculated:** -	**Access level:** 1
Data type: Integer16	**Dynamic index:** -	**Func. diagram:** -
P-Group: Applications	**Units group:** -	**Unit selection:** -
Not for motor type: -	**Scaling:** -	**Expert list:** 1
Min	**Max**	**Factory setting**
1	32	1

Description: Selects the units for the parameters of the technology controller.

Value:
1: %
2: 1 referred, no dimensions
3: bar
4: °C
5: Pa
6: ltr/s
7: m³/s
8: ltr/min
9: m³/min

© Siemens AG 2012 All Rights Reserved

10: ltr/h
11: m³/h
12: kg/s
13: kg/min
14: kg/h
15: t/min
16: t/h
17: N
18: kN
19: Nm
20: psi
21: °F
22: gallon/s
23: inch³/s
24: gallon/min
25: inch³/min
26: gallon/h
27: inch³/h
28: lb/s
29: lb/min
30: lb/h
31: lbf
32: lbf ft

Dependency: Only units of parameters with unit group 9_1 can be changed over using this parameter.
Refer to: p0596

p0596 Technological unit reference quantity / Tech unit ref qty

VECTOR_G (Tech_ctrl)

Can be changed: T	**Calculated:** -	**Access level:** 1
Data type: FloatingPoint32	**Dynamic index:** -	**Func. diagram:** -
P-Group: -	**Units group:** -	**Unit selection:** -
Not for motor type: -	**Scaling:** -	**Expert list:** 1
Min	**Max**	**Factory setting**
0.01	340.28235E36	1.00

Description: Sets the reference quantity for the technological units.
When changing over using changeover parameter p0595 to absolute units, all of the parameters involved refer to the reference quantity.

Dependency: Refer to: p0595

Notice: When changing over from one technological unit into another, or when changing the reference parameter, a changeover is not made.

p0600[0...n] Motor temperature sensor for monitoring / Mot temp_sensor

VECTOR_G

Can be changed: C2(3), U, T	**Calculated:** CALC_MOD_ALL	**Access level:** 2
Data type: Integer16	**Dynamic index:** MDS, p0130	**Func. diagram:** 8016
P-Group: Motor	**Units group:** -	**Unit selection:** -
Not for motor type: -	**Scaling:** -	**Expert list:** 1
Min	**Max**	**Factory setting**
0	21	0

Description: Sets the sensor to monitor the motor temperature.

Value:
0: No sensor
1: Temperature sensor via encoder 1
2: Temperature sensor via encoder 2
3: Temperature sensor via encoder 3
10: Temperature sensor via a BICO interconnection
11: Temperature sensor via Motor Module / CU terminals
20: Temperature sensor via a BICO interconnection p0608
21: Temperature sensor via a BICO interconnection p0609

Dependency: Refer to: r0458, p0601, p0603

© Siemens AG 2012 All Rights Reserved

Caution: If, for a selected temperature sensor (p0600 > 0), the motor temperature sensor is not connected but another sensor, then the temperature adaptation of the motor resistances must be switched out. Otherwise, in controlled-loop operation, torque errors will occur that will mean that the drive will not be able to be stopped.

Notice: The parameter is calculated in the drive using p0340 and is inhibited for p0340 > 0.

Note: Re p0600 = 0:
With induction motors, the motor temperature is calculated using the motor temperature model (see also p0612.1).
Re p0600 = 1, 2, 3:
Bimetallic switch (p0601 = 4) and PT100 temperature sensor (p0601 = 5) are not supported.
Re p0600 = 10:
The BICO interconnection should be executed via connector input p0603.
Re p0600 = 11:
For SINAMICS S120 AC Drive (AC/AC) and using the Control Unit Adapter CUA31, the temperature sensor is connected at the adapter (X210).
Re p0600 = 20, 21:
The BICO interconnection should be executed via connector input p0608 or p0609.
Associated parameters: p0601, p4600 ... p4603, p4610 ... p4613

p0601 Temperature sensor, sensor type / Temp_sens type

B_INF

Can be changed: C2(3), U, T	**Calculated:** -	**Access level:** 2
Data type: Integer16	**Dynamic index:** -	**Func. diagram:** -
P-Group: Motor	**Units group:** -	**Unit selection:** -
Not for motor type: -	**Scaling:** -	**Expert list:** 1
Min	**Max**	**Factory setting**
0	4	0

Description: Sets the sensor type for the temperature measurement at input X21 (booksize) or X41 (chassis).
The measured value is displayed in r0035.

Value:
0: No sensor
1: PTC alarm & timer
2: KTY84
4: Bimetallic NC contact alarm & timer

Dependency: Refer to: r0035

Note: The measured value display depends on the selected sensor type.
Re p0601 = 0 (no sensor):
--> r0035 = -200 °C
Re p0601 = 1 (PTC alarm & timer):
Tripping resistance = 1650 Ohm (lower resistance --> r0035 = -50 °C, higher resistance --> r0035 = 250 °C).
Re p0601 = 2 (KTY84):
Displays the temperature in °C.
Re p0601 = 4 (bimetallic NC contact alarm & timer):
r0035 = -50 °C
--> The tripping resistance is less than 100 Ohm (bimetallic NC contact is closed or has a short-circuit).
r0035 = 250 °C
--> The tripping resistance is greater than 100 Ohm (bimetallic NC contact is open, not connected or has a wire breakage).
When using the following components, a value of 4 is set as the factory setting and can no longer be changed:
- Basic Line Module (BLM) with internal Braking Module.
- Active Line Module (ALM) with line filter Active Interface Module (AIM, p0220[0] = 41 ... 45).
In these cases, in addition to the temperature display, the temperature is also monitored.

© Siemens AG 2012 All Rights Reserved

p0601[0...n] Motor temperature sensor type / Mot_temp_sens type

VECTOR_G	**Can be changed:** C2(3), U, T	**Calculated:** -	**Access level:** 2
	Data type: Integer16	**Dynamic index:** MDS, p0130	**Func. diagram:** 8016
	P-Group: Motor	**Units group:** -	**Unit selection:** -
	Not for motor type: -	**Scaling:** -	**Expert list:** 1
	Min	**Max**	**Factory setting**
	0	11	2

Description: Sets the sensor type for the motor temperature monitoring.

Value:
0: No sensor
1: PTC alarm & timer
2: KTY84
3: KTY84 and PTC (only for motors with DRIVE-CLiQ):
4: Bimetallic NC contact alarm & timer (only for temp_eval via MM)
5: PT100
10: Evaluation via several temperature channels SME12x
11: Evaluation via several temperature channels BICO

Dependency: The thermal motor model is only calculated for p0612.1 = 1.

Refer to: r0458, p0600, p0612

Note: The temperature sensor for the temperature evaluation is set in p0600.

For p0600 = 10 (temperature sensor via a BICO interconnection), the setting in p0601 has no significance.

Information on using temperature sensors is provided in the following literature:

- hardware description of the appropriate components

- SINAMICS S120 Commissioning Manual

Re p0601 = 1 (PTC alarm & timer):

Tripping resistance = 1650 Ohm.

After the tripping resistance has been exceeded, an appropriate alarm is output and after the delay time set in p0606 has expired, an appropriate fault is output.

Re p0601 = 3 (KTY84 and PTC (only for motors with DRIVE-CLiQ)):

For motors with DRIVE-CLiQ and 2 temperature sensors, the value is automatically set.

Re p0601 = 4 (bimetallic NC contact alarm & timer (only for temperature evaluation via the Motor Module)):

Tripping resistance = 100 Ohm.

After tripping, an appropriate alarm is output and after the delay time set in p0606 has expired, an appropriate fault is output.

Re p0601 = 5 (PT100):

It is only possible to evaluate a PT100 for p0600 = 11 and r0192 bit 15 = 1.

Re p0601 = 10 (evaluation through several temperature channels (SME12x)):

Not permitted for p0600 = 0, 10, 11.

Associated parameters: p4600 ... p4603 (can be switched via EDS)

For r0458.8 = 1, a temperature evaluation is supported through several temperature channels.

Examples:

When evaluating using SME120 or SME125, 4 temperature channels are available (parameterized using p4600, p4601, p4602, p4603).

When evaluating using CU310 and CUA32, 2 temperature channels are available (encoder interface, parameterization via p4600 / terminal block, parameterization via p4601).

Re p0601 = 11 (evaluation via several temperature channels (BICO)):

Not permitted for p0600 = 0, 10, 11.

Associated parameters: p4610 ... p4613 (can be switched via MDS)

© Siemens AG 2012 All Rights Reserved

p0602 Par_circuit power unit number, temperature sensor / PU_No temp_sensor

VECTOR_G (Parallel)

Can be changed: C2(3), U, T	**Calculated:** -	**Access level:** 2
Data type: Unsigned16	**Dynamic index:** -	**Func. diagram:** -
P-Group: Motor	**Units group:** -	**Unit selection:** -
Not for motor type: -	**Scaling:** -	**Expert list:** 1
Min	**Max**	**Factory setting**
0	10	0

Description: Sets the power unit number to which the temperature sensor is connected. The value corresponds to the Power unit Data Set number (PDS) of the power unit. The number of power unit data sets is defined in p0120.

p0603 CI: Motor temperature signal source / Mot temp S_src

VECTOR_G

Can be changed: C2(3), T	**Calculated:** -	**Access level:** 2
Data type: Unsigned32 / FloatingPoint32	**Dynamic index:** -	**Func. diagram:** 8016
P-Group: Motor	**Units group:** -	**Unit selection:** -
Not for motor type: -	**Scaling:** p2006	**Expert list:** 1
Min	**Max**	**Factory setting**
-	-	0

Description: Sets the signal source to evaluate the motor temperature via a BICO interconnection.

Dependency: Refer to: p0600

Note: Temperature sensor KTY: Valid temperature range -48 °C ... 248 °C.

PTC temperature sensor:

For a value = -50 °C, the following applies: Motor temperature < nominal response temperature of the PTC.

For a value = 250 °C, the following applies: Motor temperature >= nominal response temperature of the PTC.

Note:

When using a Terminal Module 31 (TM31), the following applies:

- the sensor type used is set using p4100.
- the temperature signal is interconnected using CO: r4105.

p0604[0...n] Mot_temp_mod 1/KTY alarm threshold / Mod 1/KTY A thresh

VECTOR_G

Can be changed: C2(3), U, T	**Calculated:** -	**Access level:** 2
Data type: FloatingPoint32	**Dynamic index:** MDS, p0130	**Func. diagram:** 8016
P-Group: Motor	**Units group:** 21_1	**Unit selection:** p0505
Not for motor type: -	**Scaling:** -	**Expert list:** 1
Min	**Max**	**Factory setting**
0.0 [°C]	200.0 [°C]	130.0 [°C]

Description: Sets the alarm threshold for monitoring the motor temperature for motor temperature model 1 or KTY.

After the alarm threshold is exceeded, alarm A07910 is output and timer (p0606) is started.

If the delay time has expired and the alarm threshold has, in the meantime, not been fallen below, then fault F07011 is output.

Dependency: Refer to: p0606, p0612

Refer to: F07011, A07910

Caution: When selecting a catalog motor (p0301), this parameter is automatically pre-assigned and is write protected. Information in p0300 should be carefully observed when removing write protection.

Note: The hysteresis is 2 K.

When quick commissioning is exited with p3900 > 0, then the parameter is reset if a catalog motor has not been selected (refer to p0300).

© Siemens AG 2012 All Rights Reserved

p0605[0...n] Mot_temp_mod 1/2 threshold / Threshold

VECTOR_G

Can be changed: C2(3), U, T	**Calculated:** -	**Access level:** 2
Data type: FloatingPoint32	**Dynamic index:** MDS, p0130	**Func. diagram:** 8016, 8017
P-Group: Motor	**Units group:** 21_1	**Unit selection:** p0505
Not for motor type: -	**Scaling:** -	**Expert list:** 1
Min	**Max**	**Factory setting**
0.0 [°C]	200.0 [°C]	145.0 [°C]

Description: Sets the threshold for monitoring the motor temperature for motor temperature model 1/2.

Motor temperature model 1 (p0612.0 = 1): alarm threshold

- Alarm A07910 is output after the alarm threshold is exceeded.

Motor temperature model 2 (p0612.1 = 1): fault threshold

- Fault F07911 is output after the fault threshold is exceeded.

Dependency: Refer to: p0606, p0611, p0612

Refer to: F07011, A07012

Caution: When selecting a catalog motor (p0301), this parameter is automatically pre-assigned and is write protected. Information in p0300 should be carefully observed when removing write protection.

Note: The hysteresis is 2 K.

When quick commissioning is exited with p3900 > 0, then the parameter is reset if a catalog motor has not been selected (refer to p0300).

p0606[0...n] Mot_temp_mod 2/KTY timer / Mod 2/KTY t_timer

VECTOR_G

Can be changed: C2(3), U, T	**Calculated:** -	**Access level:** 2
Data type: FloatingPoint32	**Dynamic index:** MDS, p0130	**Func. diagram:** 8016
P-Group: Motor	**Units group:** -	**Unit selection:** -
Not for motor type: -	**Scaling:** -	**Expert list:** 1
Min	**Max**	**Factory setting**
0.000 [s]	600.000 [s]	0.000 [s]

Description: Sets the timer for monitoring the motor temperature for motor temperature model 2 or KTY.

This timer is started when the temperature alarm threshold (p0604) is exceeded.

If the timer has expired and the alarm threshold has, in the meantime, not been fallen below, then fault F07011 is output.

If the temperature fault threshold (p0605) is prematurely exceeded before the timer has expired, then fault F07011 is immediately output.

Dependency: Refer to: p0604, p0605

Refer to: F07011, A07910

Note: With p0606 = 0 s, the timer is de-activated and only the fault threshold is effective.

KTY sensor: When setting the minimum value, the timer is disabled and a fault is not output until p0605 is exceeded.

PTC sensor, bimetallic NC contact: The timer minimum value has no special significance.

p0607[0...n] Temperature sensor fault timer / Sensor fault time

VECTOR_G

Can be changed: C2(3), U, T	**Calculated:** -	**Access level:** 2
Data type: FloatingPoint32	**Dynamic index:** MDS, p0130	**Func. diagram:** -
P-Group: Motor	**Units group:** -	**Unit selection:** -
Not for motor type: -	**Scaling:** -	**Expert list:** 1
Min	**Max**	**Factory setting**
0.000 [s]	600.000 [s]	0.100 [s]

Description: Sets the timer between the output of alarm and fault for a temperature sensor fault.

If there is a sensor fault, this timer is started.

If the sensor fault is still present after the timer has expired, a corresponding fault is output.

Notice: The parameterized time is internally rounded-off to an integer multiple of 48 ms.

Note: If the motor is an induction motor, the timer is switched off when setting the minimum value and no alarm is output. Temperature monitoring is then based on the thermal model.

© Siemens AG 2012 All Rights Reserved

p0608[0...3] CI: Motor temperature signal source 2 / Mot_temp S_src 2

VECTOR_G	**Can be changed:** C2(3), T	**Calculated:** -	**Access level:** 2
	Data type: Unsigned32 / FloatingPoint32	**Dynamic index:** -	**Func. diagram:** 8016
	P-Group: Motor	**Units group:** -	**Unit selection:** -
	Not for motor type: -	**Scaling:** p2006	**Expert list:** 1
	Min	**Max**	**Factory setting**
	-	-	0

Description: Sets signal source 2 to evaluate the motor temperature via a BICO interconnection.

Index:
[0] = Motor temperature channel 1
[1] = Motor temperature channel 2
[2] = Motor temperature channel 3
[3] = Motor temperature channel 4

Dependency: Refer to: p0600

Note: Temperature sensor KTY:

Valid temperature range -48 °C ... 248 °C.

Temperature sensor PTC/bimetal:

For a value of -50 °C, the following applies: Motor temperature < nominal response temperature of the PTC (bimetal contact closed).

For a value of 250 °C, the following applies: Motor temperature >= nominal response temperature of the PTC (bimetal contact open).

Note:

When using a Terminal Module 120 (TM120), the following applies:

- the sensor type used is set using p4100.
- the temperature signal is interconnected using connector output r4105.

p0609[0...3] CI: Motor temperature signal source 3 / Mot_temp S_src 3

VECTOR_G	**Can be changed:** C2(3), T	**Calculated:** -	**Access level:** 2
	Data type: Unsigned32 / FloatingPoint32	**Dynamic index:** -	**Func. diagram:** 8016
	P-Group: Motor	**Units group:** -	**Unit selection:** -
	Not for motor type: -	**Scaling:** p2006	**Expert list:** 1
	Min	**Max**	**Factory setting**
	-	-	0

Description: Sets signal source 3 to evaluate the motor temperature via a BICO interconnection.

Index:
[0] = Motor temperature channel 1
[1] = Motor temperature channel 2
[2] = Motor temperature channel 3
[3] = Motor temperature channel 4

Dependency: Refer to: p0600

Note: Temperature sensor KTY:

Valid temperature range -48 °C ... 248 °C.

Temperature sensor PTC/bimetal:

For a value of -50 °C, the following applies: Motor temperature < nominal response temperature of the PTC (bimetal contact closed).

For a value of 250 °C, the following applies: Motor temperature >= nominal response temperature of the PTC (bimetal contact open).

Note:

When using a Terminal Module 120 (TM120), the following applies:

- the sensor type used is set using p4100.
- the temperature signal is interconnected using connector output r4105.

© Siemens AG 2012 All Rights Reserved

p0610[0...n] Motor overtemperature response / Mot temp response

VECTOR_G

Can be changed: C2(3), T	**Calculated:** -	**Access level:** 2
Data type: Integer16	**Dynamic index:** MDS, p0130	**Func. diagram:** 8016
P-Group: Motor	**Units group:** -	**Unit selection:** -
Not for motor type: -	**Scaling:** -	**Expert list:** 1
Min	**Max**	**Factory setting**
0	2	2

Description: Sets the system response when the motor temperature reaches the alarm threshold.

Value:
0: No response only alarm no reduction of I_max
1: Alarm with reduction of I_max and fault
2: Alarm and fault no reduction of I_max

Dependency: Refer to: p0601, p0604, p0605
Refer to: F07011, A07910

Note: The I_max reduction is not executed for PTC (p0601 = 1) or bimetallic NC contact (p0601 = 4).
The I_max reduction results in a lower output frequency.

p0611[0...n] I2t motor model thermal time constant / I2t mot_mod T

VECTOR_G

Can be changed: C2(3), U, T	**Calculated:** -	**Access level:** 3
Data type: FloatingPoint32	**Dynamic index:** MDS, p0130	**Func. diagram:** 8017
P-Group: Motor	**Units group:** -	**Unit selection:** -
Not for motor type: ASM, REL, FEM	**Scaling:** -	**Expert list:** 1
Min	**Max**	**Factory setting**
0 [s]	20000 [s]	0 [s]

Description: Sets the winding time constant.
The time constant specifies the warm-up time of the cold stator winding when loaded with the motor standstill current up until a temperature rise of 63 % of the continuously permissible winding temperature has been reached.

Dependency: This parameter is only used for synchronous motors (p0300 = 2xx).
Refer to: r0034, p0612, p0615
Refer to: F07011, A07012, A07910

Caution: This parameter is automatically pre-set from the motor database for motors from the motor list (p0301).
When selecting a catalog motor, this parameter cannot be changed (write protection). Information in p0300 should be carefully observed when removing write protection.

Note: When parameter p0611 is reset to 0, then this switches out the thermal I2t motor model (also refer to p0612).
If no temperature sensor is parameterized, then the ambient temperature for the thermal motor model is referred to p0625.

p0612[0...n] Mot_temp_mod activation / Mot_temp_mod act

VECTOR_G

Can be changed: U, T	**Calculated:** -	**Access level:** 2
Data type: Unsigned16	**Dynamic index:** MDS, p0130	**Func. diagram:** 8017
P-Group: -	**Units group:** -	**Unit selection:** -
Not for motor type: REL, FEM	**Scaling:** -	**Expert list:** 1
Min	**Max**	**Factory setting**
-	-	0010 bin

Description: Setting to activate the motor temperature model.

Bit field:

Bit	Signal name	1 signal	0 signal	FP
00	Activating motor temperature model 1 (I2t)	Yes	No	-
01	Activate motor temperature model 2	Yes	No	-

Dependency: Refer to: r0034, p0604, p0605, p0606, p0611, p0615, p0625, p0626, p0627, p0628
Refer to: F07011, A07012, A07910

Note: Mot_temp_mod: motor temperature model
Re bit 00:
This bit is only used for permanent-magnet synchronous motors (p0300 = 2xx). It is only possible to activate this motor temperature model (I2t) for a time constant greater than zero (p0611 > 0).

© Siemens AG 2012 All Rights Reserved

Re bit 01:
This bit is used to activate/deactivate the motor temperature model for induction motors.

p0615[0...n] Mot_temp_mod 1 (I2t) fault threshold / I2t F thresh

VECTOR_G

Can be changed: C2(3), U, T	**Calculated:** -	**Access level:** 2
Data type: FloatingPoint32	**Dynamic index:** MDS, p0130	**Func. diagram:** 8017
P-Group: Motor	**Units group:** 21_1	**Unit selection:** p0505
Not for motor type: ASM, REL, FEM	**Scaling:** -	**Expert list:** 1
Min	**Max**	**Factory setting**
0.0 [°C]	220.0 [°C]	180.0 [°C]

Description: Sets the fault threshold for monitoring the motor temperature for motor temperature model 1 (I2t).
- Fault F07911 is output after the fault threshold is exceeded.

Dependency: The parameter is only used for permanent-magnet synchronous motors (p0300 = 2xx).
Refer to: r0034, p0611, p0612
Refer to: F07011, A07012

Caution: When selecting a catalog motor (p0301), this parameter is automatically pre-assigned and is write protected. Information in p0300 should be carefully observed when removing write protection.

Note: The hysteresis is 2 K.

p0616[0...n] Motor overtemperature alarm threshold 1 / Mot temp alarm 1

VECTOR_G

Can be changed: C2(3), U, T	**Calculated:** -	**Access level:** 2
Data type: FloatingPoint32	**Dynamic index:** MDS, p0130	**Func. diagram:** 8016
P-Group: Motor	**Units group:** 21_1	**Unit selection:** p0505
Not for motor type: -	**Scaling:** -	**Expert list:** 1
Min	**Max**	**Factory setting**
0.0 [°C]	200.0 [°C]	130.0 [°C]

Description: Sets the alarm threshold 1 for monitoring the motor temperature.

Note: The alarm threshold is not, as for p0604, coupled to the timer p0606. The hysteresis for canceling the fault is 2 K.

p0620[0...n] Thermal adaptation, stator and rotor resistance / Mot therm_adapt R

VECTOR_G

Can be changed: C2(3), U, T	**Calculated:** CALC_MOD_ALL	**Access level:** 2
Data type: Integer16	**Dynamic index:** MDS, p0130	**Func. diagram:** -
P-Group: Motor	**Units group:** -	**Unit selection:** -
Not for motor type: -	**Scaling:** -	**Expert list:** 1
Min	**Max**	**Factory setting**
0	2	1

Description: Sets the thermal adaptation of the stator/primary section resistance and rotor/secondary section resistance according to r0395 and r0396.

Value:
0: No thermal adaptation of stator and rotor resistances
1: Resistances adapted to the temperatures of the thermal model
2: Resistances adapted to the measured stator winding temperature

Note: For p0620 = 1, the following applies:
The stator resistance is adapted using the temperature in r0035 and the rotor resistance together with the model temperature in r0633.
For p0620 = 2, the following applies:
The stator resistance is adapted using the temperature in r0035. If applicable, the rotor temperature for adapting the rotor resistance is calculated from the stator temperature (r0035) as follows:
theta_R = (r0628 + r0625) / (r0627 + r0625) * r0035
For separately-excited synchronous motors and p0620 = 1, p0620 = 2 is internally and automatically used for calculating. There is no thermal model to adapt the damping resistances.

© Siemens AG 2012 All Rights Reserved

p0621[0...n] Identification stator resistance after restart / Rst_ident Restart

VECTOR_G (n/M)

Can be changed: C2(3), T	**Calculated:** -	**Access level:** 2
Data type: Integer16	**Dynamic index:** MDS, p0130	**Func. diagram:** -
P-Group: Motor	**Units group:** -	**Unit selection:** -
Not for motor type: PEM, REL, FEM	**Scaling:** -	**Expert list:** 1
Min	**Max**	**Factory setting**
0	2	0

Description: Selects the identification of the stator resistance after booting the Control Unit (only for vector control).

The identification is used to measure the actual stator resistance and from the ratio of the result of motor data identification (p0350) to the matching ambient temperature (p0625) the actual mean temperature of the stator winding is calculated. The result is used to initialize the thermal motor model.

p0621 = 1:

Identification of the stator resistance only when the drive is powered up for the first time (pulse enable) after booting the Control Unit.

p0621 = 2:

Identification of the stator resistance every time the drive is powered up (pulse enable).

Value:
0: No Rs identification
1: Rs identification after switching-on again
2: Rs identification after switching-on each time

Dependency:
- perform motor data identification (see p1910) with cold motor.
- enter ambient temperature at time of motor data identification in p0625.

Refer to: p0622, r0623

Notice: The calculated stator temperature can only be compared with the measured value of a temperature sensor (KTY) to a certain extent, as the sensor is usually the warmest point of the stator winding, whereas the measured value of identification reflects the mean value of the stator winding.

Furthermore this is a short-time measurement with limited accuracy that is performed during the magnetizing phase of the induction motor.

Note: The measurement is carried out:
- For induction motors
- When vector control is active (see p1300)
- If a temperature sensor (KTY) has not been connected
- When the motor is at a standstill when switched on

When a flying restart is performed on a rotating motor, the temperatures of the thermal motor model are set to a third of the overtemperatures. This occurs only once, however, when the CU is booted (e.g. after a power failure).

If identification is activated, the magnetizing time is determined via p0622 and not via p0346. Quick magnetizing (p1401.6) is de-energized internally and alarm A07416 is displayed. The speed is enabled after completion of the measurement.

p0622[0...n] Motor excitation time for Rs_ident after powering up again / t_excit Rs_id

VECTOR_G (n/M)

Can be changed: C2(3), U, T	**Calculated:** CALC_MOD_REG	**Access level:** 3
Data type: FloatingPoint32	**Dynamic index:** MDS, p0130	**Func. diagram:** -
P-Group: Motor	**Units group:** -	**Unit selection:** -
Not for motor type: PEM, REL, FEM	**Scaling:** -	**Expert list:** 1
Min	**Max**	**Factory setting**
0.000 [s]	20.000 [s]	0.000 [s]

Description: Sets the excitation time of the motor for the stator resistance identification after powering up again (restart).

Dependency: Refer to: p0621, r0623

Note: For p0622 < p0346 the following applies:

If identification is activated, the magnetizing time is influenced by p0622. The speed is enabled after measurement is complete, but not before the time in p0346 has elapsed (see r0056 bit 4). The time taken for measurement also depends on the settling time of the measured current.

© Siemens AG 2012 All Rights Reserved

For p0622 >= p0346 the following applies:

Parameter p0622 is internally limited to the magnetizing time p0346, so that p0346 represents the maximum possible magnetizing time during identification. The entire measurement period (magnetizing plus measurement settling time plus measuring time) will always be greater than p0346.

r0623 Stator resistance of Rs identification after powering up again / R_stator Rs-Id

VECTOR_G (n/M)	**Can be changed:** -	**Calculated:** -	**Access level:** 4
	Data type: FloatingPoint32	**Dynamic index:** -	**Func. diagram:** -
	P-Group: Motor identification	**Units group:** -	**Unit selection:** -
	Not for motor type: PEM, REL, FEM	**Scaling:** -	**Expert list:** 1
	Min - [ohm]	**Max** - [ohm]	**Factory setting** - [ohm]

Description: Displays the identified stator resistance after the Rs identification after powering up again.

Dependency: Refer to: p0621, p0622

p0624[0...n] Motor temperature offset PT100 / Mot T_offset PT100

VECTOR_G	**Can be changed:** C2(3), U, T	**Calculated:** -	**Access level:** 3
	Data type: FloatingPoint32	**Dynamic index:** MDS, p0130	**Func. diagram:** 8016
	P-Group: Motor	**Units group:** 21_2	**Unit selection:** p0505
	Not for motor type: -	**Scaling:** -	**Expert list:** 1
	Min -100.0 [K]	**Max** 100.0 [K]	**Factory setting** 0.0 [K]

Description: Sets the temperature offset for the PT100 measured value.

If there is a difference between the motor temperature displayed in r0035 and the actual motor temperature, this offset can be entered in this parameter, thereby compensating for the difference.

Dependency: Refer to: p0600, p0601, p0602

Note: The parameter only takes effect with the following settings:

- Temperature sensor of the power unit detected (p0600 = 11).
- Sensor type PT100 selected (p0601 = 5).

If the resistance in series with the PT100 (e.g. the cable resistance of the feeder cable) is known, the following conversion formula must be used:

Offset in p0624 = Measured resistance in ohms x 2.5 K/Ohm

Example:

Measured cable resistance = 2 Ohm

--> 2 Ohm x 2.5 K / Ohm = 5.0 K

p0625[0...n] Motor ambient temperature / Mot T_ambient

VECTOR_G	**Can be changed:** C2(3), U, T	**Calculated:** CALC_MOD_EQU	**Access level:** 3
	Data type: FloatingPoint32	**Dynamic index:** MDS, p0130	**Func. diagram:** 8016
	P-Group: Motor	**Units group:** 21_1	**Unit selection:** p0505
	Not for motor type: -	**Scaling:** -	**Expert list:** 1
	Min -40 [°C]	**Max** 80 [°C]	**Factory setting** 20 [°C]

Description: Defines the ambient temperature of the motor for calculating the motor temperature model.

Note: The parameters for stator and rotor resistance (p0350, p0354) refer to this temperature.

If the thermal I2t motor model is activated for permanent-magnet synchronous motors (refer to p0611), p0625 is included in the model calculation if a temperature sensor is not being used (see p0601).

© Siemens AG 2012 All Rights Reserved

p0626[0...n] Motor overtemperature, stator core / Mot T_over core

VECTOR_G	**Can be changed:** C2(3), U, T	**Calculated:** CALC_MOD_EQU	**Access level:** 3
	Data type: FloatingPoint32	**Dynamic index:** MDS, p0130	**Func. diagram:** 8016
	P-Group: Motor	**Units group:** 21_2	**Unit selection:** p0505
	Not for motor type: PEM, REL, FEM	**Scaling:** -	**Expert list:** 1
	Min	**Max**	**Factory setting**
	20 [K]	200 [K]	50 [K]

Description: Defines the rated overtemperature of the stator core referred to the ambient temperature.

Dependency: For 1LA5 and 1LA7 motors (refer to p0300), the parameter is pre-set as a function of p0307 and p0311.
Refer to: p0625

Note: When quick commissioning is exited with p3900 > 0, then the parameter is reset if a catalog motor has not been selected (refer to p0300).

p0627[0...n] Motor overtemperature, stator winding / Mot T_over stator

VECTOR_G	**Can be changed:** C2(3), U, T	**Calculated:** CALC_MOD_EQU	**Access level:** 3
	Data type: FloatingPoint32	**Dynamic index:** MDS, p0130	**Func. diagram:** 8016
	P-Group: Motor	**Units group:** 21_2	**Unit selection:** p0505
	Not for motor type: PEM, REL, FEM	**Scaling:** -	**Expert list:** 1
	Min	**Max**	**Factory setting**
	20 [K]	200 [K]	80 [K]

Description: Defines the rated overtemperature of the stator winding referred to the ambient temperature.

Dependency: For 1LA5 and 1LA7 motors (refer to p0300), the parameter is pre-set as a function of p0307 and p0311.
Refer to: p0625

Note: When quick commissioning is exited with p3900 > 0, then the parameter is reset if a catalog motor has not been selected (refer to p0300).

p0628[0...n] Motor overtemperature rotor winding / Mot T_over rotor

VECTOR_G	**Can be changed:** C2(3), U, T	**Calculated:** CALC_MOD_EQU	**Access level:** 3
	Data type: FloatingPoint32	**Dynamic index:** MDS, p0130	**Func. diagram:** 8016
	P-Group: Motor	**Units group:** 21_2	**Unit selection:** p0505
	Not for motor type: PEM, REL, FEM	**Scaling:** -	**Expert list:** 1
	Min	**Max**	**Factory setting**
	20 [K]	200 [K]	100 [K]

Description: Defines the rated overtemperature of the squirrel cage rotor referred to ambient temperature.

Dependency: For 1LA5 and 1LA7 motors (refer to p0300), the parameter is pre-set as a function of p0307 and p0311.
Refer to: p0625

Note: When quick commissioning is exited with p3900 > 0, then the parameter is reset if a catalog motor has not been selected (refer to p0300).

r0630[0...n] Mot_temp_mod ambient temperature / Mod T_ambient

VECTOR_G	**Can be changed:** -	**Calculated:** -	**Access level:** 4
	Data type: FloatingPoint32	**Dynamic index:** MDS, p0130	**Func. diagram:** 8016
	P-Group: Motor	**Units group:** 21_1	**Unit selection:** p0505
	Not for motor type: REL, FEM	**Scaling:** p2006	**Expert list:** 1
	Min	**Max**	**Factory setting**
	- [°C]	- [°C]	- [°C]

Description: Displays the ambient temperature of the motor temperature model.

© Siemens AG 2012 All Rights Reserved

r0631[0...n] Mot_temp_mod stator iron temperature / Mod T_stator

VECTOR_G	**Can be changed:** -	**Calculated:** -	**Access level:** 4
	Data type: FloatingPoint32	**Dynamic index:** MDS, p0130	**Func. diagram:** 8016
	P-Group: Motor	**Units group:** 21_1	**Unit selection:** p0505
	Not for motor type: REL, FEM	**Scaling:** p2006	**Expert list:** 1
	Min	**Max**	**Factory setting**
	- [°C]	- [°C]	- [°C]

Description: Displays the stator core temperature of the motor temperature model.

r0632[0...n] Mot_temp_mod stator winding temperature / Mod T_winding

VECTOR_G	**Can be changed:** -	**Calculated:** -	**Access level:** 4
	Data type: FloatingPoint32	**Dynamic index:** MDS, p0130	**Func. diagram:** 8016
	P-Group: Motor	**Units group:** 21_1	**Unit selection:** p0505
	Not for motor type: REL, FEM	**Scaling:** p2006	**Expert list:** 1
	Min	**Max**	**Factory setting**
	- [°C]	- [°C]	- [°C]

Description: Displays the stator winding temperature of the motor temperature model.

r0633[0...n] Mot_temp_mod rotor temperature / Mod T_rotor

VECTOR_G	**Can be changed:** -	**Calculated:** -	**Access level:** 4
	Data type: FloatingPoint32	**Dynamic index:** MDS, p0130	**Func. diagram:** 8016
	P-Group: Motor	**Units group:** 21_1	**Unit selection:** p0505
	Not for motor type: REL, FEM	**Scaling:** p2006	**Expert list:** 1
	Min	**Max**	**Factory setting**
	- [°C]	- [°C]	- [°C]

Description: Displays the rotor temperature of the motor temperature model.

Note: For motor temperature model 3 (p0612.2 = 1), this parameter is not valid:

p0634[0...n] Q flux flux constant unsaturated / PSIQ KPSI UNSAT

VECTOR_G	**Can be changed:** C2(3), U, T	**Calculated:** -	**Access level:** 3
	Data type: FloatingPoint32	**Dynamic index:** MDS, p0130	**Func. diagram:** -
	P-Group: Motor	**Units group:** -	**Unit selection:** -
	Not for motor type: ASM, FEM	**Scaling:** -	**Expert list:** 1
	Min	**Max**	**Factory setting**
	0.000 [Vsrms]	100.000 [Vsrms]	0.000 [Vsrms]

Description: The non-linear and cross-coupled quadrature axis flux functions are defined using 4 coefficients.
The parameter weights the unsaturated component of the quadrature axis flux function.

p0635[0...n] Q flux quadrature axis current constant unsaturated / PSIQ KIQ UNSAT

VECTOR_G	**Can be changed:** C2(3), U, T	**Calculated:** -	**Access level:** 3
	Data type: FloatingPoint32	**Dynamic index:** MDS, p0130	**Func. diagram:** -
	P-Group: Motor	**Units group:** -	**Unit selection:** -
	Not for motor type: ASM, FEM	**Scaling:** -	**Expert list:** 1
	Min	**Max**	**Factory setting**
	0.00 [Arms]	10000.00 [Arms]	0.00 [Arms]

Description: The non-linear and cross-coupled quadrature axis flux functions are defined using 4 coefficients.
This parameter describes the interdependency of the unsaturated component of the quadrature axis current.

Dependency: Refer to: p0634

© Siemens AG 2012 All Rights Reserved

p0636[0...n] Q flux direct axis current constant unsaturated / PSIQ KID UNSAT

VECTOR_G

Can be changed: C2(3), U, T	**Calculated:** -	**Access level:** 3
Data type: FloatingPoint32	**Dynamic index:** MDS, p0130	**Func. diagram:** -
P-Group: Motor	**Units group:** -	**Unit selection:** -
Not for motor type: ASM, FEM	**Scaling:** -	**Expert list:** 1
Min	**Max**	**Factory setting**
0.00 [Arms]	10000.00 [Arms]	0.00 [Arms]

Description: The non-linear and cross-coupled quadrature axis flux functions are defined using 4 coefficients.
This parameter describes the interdependency of the unsaturated component of the direct axis current.

Dependency: Refer to: p0634

p0637[0...n] Q flux flux gradient saturated / PSIQ Grad SAT

VECTOR_G

Can be changed: C2(3), U, T	**Calculated:** -	**Access level:** 3
Data type: FloatingPoint32	**Dynamic index:** MDS, p0130	**Func. diagram:** -
P-Group: Motor	**Units group:** -	**Unit selection:** -
Not for motor type: ASM, FEM	**Scaling:** -	**Expert list:** 1
Min	**Max**	**Factory setting**
0.00 [mH]	10000.00 [mH]	0.00 [mH]

Description: The non-linear and cross-coupled quadrature axis flux functions are defined using 4 coefficients.
This parameter describes the gradients of the saturated component over the quadrature axis current.

Dependency: Refer to: p0634, p0635, p0636

p0640[0...n] Current limit / Current limit

VECTOR_G

Can be changed: C2(1, 3), U, T	**Calculated:** CALC_MOD_ALL	**Access level:** 2
Data type: FloatingPoint32	**Dynamic index:** DDS, p0180	**Func. diagram:** 5722, 6640
P-Group: Motor	**Units group:** -	**Unit selection:** -
Not for motor type: -	**Scaling:** -	**Expert list:** 1
Min	**Max**	**Factory setting**
0.00 [Arms]	10000.00 [Arms]	0.00 [Arms]

Description: Sets the current limit.

Dependency: Refer to: r0209, p0323

Note: The parameter is part of the quick commissioning (p0010 = 1); this means that it is appropriately pre-assigned when changing p0305, p0323 and p0338.

The current limit p0640 is limited to r0209 and p0323. The limit to p0323 is not realized if a value of zero is entered there.

The resulting current limit is displayed in r0067 and if required, r0067 is reduced by the thermal model of the Motor Module.

The torque and power limits (p1520, p1521, p1530, p1531) matching the current limit are automatically calculated when exiting the quick commissioning using p3900 > 0 or using the automatic parameterization with p0340 = 3, 5.

For VECTOR the following applies (p0107):

p0640 is limited to 4.0 x p0305.

p0640 is pre-assigned for the automatic self commissioning routine (e.g. to 1.5 x p0305, with p0305 = r0207[1]).

p0640 must be entered when commissioning the system. This is the reason that p0640 is not calculated by the automatic parameterization when exiting the quick commissioning (p3900 > 0).

For SERVO the following applies (p0107):

p0640 is pre-assigned as follows using the automatic parameterization (p0340 = 1, p3900 > 0) taking into account the limits r0209 and r0323:

- for induction motors: p0640 = 1.5 x p0305
- for synchronous motors: p0640 = p0338

© Siemens AG 2012 All Rights Reserved

p0641[0...n] CI: Current limit, variable / Curr lim var

VECTOR_G	**Can be changed:** T	**Calculated:** -	**Access level:** 3
	Data type: Unsigned32 / FloatingPoint32	**Dynamic index:** CDS, p0170	**Func. diagram:** 6640
	P-Group: Closed-loop control	**Units group:** -	**Unit selection:** -
	Not for motor type: -	**Scaling:** PERCENT	**Expert list:** 1
	Min	**Max**	**Factory setting**
	-	-	1

Description: Sets the signal source for the variable current limit.
The value is referred to p0640.

p0643[0...n] Overvoltage protection for synchronous motors / Overvolt_protect

VECTOR_G (n/M)	**Can be changed:** C2(3)	**Calculated:** -	**Access level:** 3
	Data type: Integer16	**Dynamic index:** MDS, p0130	**Func. diagram:** -
	P-Group: Motor	**Units group:** -	**Unit selection:** -
	Not for motor type: -	**Scaling:** -	**Expert list:** 1
	Min	**Max**	**Factory setting**
	0	1	0

Description: Sets the overvoltage protection for synchronous motors in the field-weakening range.

Value:
0: No measure
1: Voltage Protection Module (VPM)

Dependency: Refer to: p0316, p1082, p1231, p9601, p9801
Refer to: F07906, F07907

Notice: When the speed limiting is removed, the user is responsible for implementing a suitable overvoltage protection.

Note: In the field-weakening range, synchronous motors can, when a fault condition exists, generate high DC link voltages. The following possibilities exist to protect the drive system from being destroyed due to overvoltage:
- limit the maximum speed (p1082) without any additional protection.
The maximum speed without protection is calculated as follows:
Rotary motors: p1082 [rpm] <= 11.695 * r0297/p0316 [Nm/A]
Linear motors: p1082 [m/min] <= 73.484 *r0297/0316 [N/A]
- use a Voltage Protection Module (VPM) in conjunction with the function "Safe Torque Off" (p9601, p9801).
When a fault condition exists, the VPM short-circuits the motors. During the short-circuit, the pulses must be suppressed - this means that the terminals for the function "Safe Torque Off" must be connected to the VPM.
- activating the internal voltage protection (IVP) with p1231 = 3.

p0650[0...n] Actual motor operating hours / Mot t_oper act

VECTOR_G	**Can be changed:** T	**Calculated:** -	**Access level:** 3
	Data type: Unsigned32	**Dynamic index:** MDS, p0130	**Func. diagram:** -
	P-Group: Motor	**Units group:** -	**Unit selection:** -
	Not for motor type: -	**Scaling:** -	**Expert list:** 1
	Min	**Max**	**Factory setting**
	0 [h]	4294967295 [h]	0 [h]

Description: Displays the operating hours for the corresponding motor.
The motor operating time counter continues to run when the pulses are enabled. When the pulse enable is withdrawn, the counter is held and the value saved.

Dependency: The following prerequisites must be fulfilled in order to be able to save the operating hours counter in a non-volatile fashion:
- firmware with V2.2 or higher.
- Control Unit 320 (CU320) with hardware version C or higher (module with NVRAM).
Refer to: p0651
Refer to: A01590

Note: The operating hours counter in p0650 can only be reset to 0.
The operating hours counter only runs with motor data set 0 and 1 (MDS).

© Siemens AG 2012 All Rights Reserved

p0651[0...n] Motor operating hours maintenance interval / Mot t_op maint

VECTOR_G	**Can be changed:** T	**Calculated:** -	**Access level:** 3
	Data type: Unsigned32	**Dynamic index:** MDS, p0130	**Func. diagram:** -
	P-Group: Motor	**Units group:** -	**Unit selection:** -
	Not for motor type: -	**Scaling:** -	**Expert list:** 1
	Min	**Max**	**Factory setting**
	0 [h]	150000 [h]	0 [h]

Description: Sets the service/maintenance intervals in hours for the appropriate motor.
An appropriate fault is output when the operating hours set here are reached.

Dependency: Refer to: p0650
Refer to: A01590

Note: For p0651 = 0, the operating hours counter is disabled.
When setting p0651 to 0, then p0650 is automatically set to 0.
The operating hours counter only runs with motor data set 0 and 1 (MDS).

p0652[0...n] Motor stator resistance, scaling / Mot R_stator scal

VECTOR_G	**Can be changed:** C2(3), U, T	**Calculated:** CALC_MOD_EQU	**Access level:** 4
	Data type: FloatingPoint32	**Dynamic index:** MDS, p0130	**Func. diagram:** -
	P-Group: Motor	**Units group:** -	**Unit selection:** -
	Not for motor type: ASM, PEM, REL	**Scaling:** -	**Expert list:** 1
	Min	**Max**	**Factory setting**
	10.0 [%]	300.0 [%]	100.0 [%]

Description: Sets the factor to evaluate the stator resistance.

Dependency: Refer to: p0350, r0370

p0653[0...n] Motor stator leakage inductance, scaling / Mot L_S_leak scal

VECTOR_G	**Can be changed:** C2(3), U, T	**Calculated:** CALC_MOD_EQU	**Access level:** 4
	Data type: FloatingPoint32	**Dynamic index:** MDS, p0130	**Func. diagram:** -
	P-Group: Motor	**Units group:** -	**Unit selection:** -
	Not for motor type: ASM, PEM, REL	**Scaling:** -	**Expert list:** 1
	Min	**Max**	**Factory setting**
	10.0 [%]	300.0 [%]	100.0 [%]

Description: Sets the factor to evaluate the stator leakage induction.

Dependency: Refer to: p0356, r0377

p0655[0...n] Motor magnetizing inductance, d axis saturated scaling / Mot L_m d sat scal

VECTOR_G	**Can be changed:** C2(3), U, T	**Calculated:** CALC_MOD_EQU	**Access level:** 4
	Data type: FloatingPoint32	**Dynamic index:** MDS, p0130	**Func. diagram:** 6727
	P-Group: Motor	**Units group:** -	**Unit selection:** -
	Not for motor type: ASM, PEM, REL	**Scaling:** -	**Expert list:** 1
	Min	**Max**	**Factory setting**
	10.0 [%]	300.0 [%]	100.0 [%]

Description: Factor to evaluate the magnetizing inductance in the direction of the rotor axis (d axis).

Dependency: Refer to: p0360, r0382

© Siemens AG 2012 All Rights Reserved

p0656[0...n] Motor magnetizing inductance, q axis, saturated scaling / Mot L_m q sat scal

VECTOR_G	**Can be changed:** C2(3), U, T	**Calculated:** CALC_MOD_EQU	**Access level:** 4
	Data type: FloatingPoint32	**Dynamic index:** MDS, p0130	**Func. diagram:** 6727
	P-Group: Motor	**Units group:** -	**Unit selection:** -
	Not for motor type: ASM, PEM, REL	**Scaling:** -	**Expert list:** 1
	Min	**Max**	**Factory setting**
	10.0 [%]	300.0 [%]	100.0 [%]

Description: Factor to evaluate the magnetizing inductance quadrature to the rotor axis (q axis).

Dependency: Refer to: p0361, r0383

p0657[0...n] Motor damping inductance, d axis scaling / Mot L_damp d scal

VECTOR_G	**Can be changed:** C2(3), U, T	**Calculated:** CALC_MOD_EQU	**Access level:** 4
	Data type: FloatingPoint32	**Dynamic index:** MDS, p0130	**Func. diagram:** 6727
	P-Group: Motor	**Units group:** -	**Unit selection:** -
	Not for motor type: ASM, PEM, REL	**Scaling:** -	**Expert list:** 1
	Min	**Max**	**Factory setting**
	10.0 [%]	300.0 [%]	100.0 [%]

Description: Factor to evaluate the damping inductance in the direction of the rotor axis (d axis).

Dependency: Refer to: p0358, r0380

p0658[0...n] Motor damping inductance, q axis scaling / Mot L_damp q scal

VECTOR_G	**Can be changed:** C2(3), U, T	**Calculated:** CALC_MOD_EQU	**Access level:** 4
	Data type: FloatingPoint32	**Dynamic index:** MDS, p0130	**Func. diagram:** 6727
	P-Group: Motor	**Units group:** -	**Unit selection:** -
	Not for motor type: ASM, PEM, REL	**Scaling:** -	**Expert list:** 1
	Min	**Max**	**Factory setting**
	10.0 [%]	300.0 [%]	100.0 [%]

Description: Factor to evaluate the damping inductance quadrature to the rotor axis (q axis).

Dependency: Refer to: p0359, r0381

p0659[0...n] Motor damping resistance, d axis scaling / Mot R_damp d scal

VECTOR_G	**Can be changed:** C2(3), U, T	**Calculated:** CALC_MOD_EQU	**Access level:** 4
	Data type: FloatingPoint32	**Dynamic index:** MDS, p0130	**Func. diagram:** 6727
	P-Group: Motor	**Units group:** -	**Unit selection:** -
	Not for motor type: ASM, PEM, REL	**Scaling:** -	**Expert list:** 1
	Min	**Max**	**Factory setting**
	10.0 [%]	300.0 [%]	100.0 [%]

Description: Factor to evaluate the damping resistance in the direction of the rotor axis (d axis).

Dependency: Refer to: p0354, r0374

p0660[0...n] Motor damping resistance, q axis scaling / Mot R_damp q scal

VECTOR_G	**Can be changed:** C2(3), U, T	**Calculated:** CALC_MOD_EQU	**Access level:** 4
	Data type: FloatingPoint32	**Dynamic index:** MDS, p0130	**Func. diagram:** 6727
	P-Group: Motor	**Units group:** -	**Unit selection:** -
	Not for motor type: ASM, PEM, REL	**Scaling:** -	**Expert list:** 1
	Min	**Max**	**Factory setting**
	10.0 [%]	300.0 [%]	100.0 [%]

Description: Factor to evaluate the damping resistance quadrature to the rotor axis (q axis).

Dependency: Refer to: p0355, r0375

© Siemens AG 2012 All Rights Reserved

p0680[0...7] Central measuring probe, input terminal / Cen meas inp

CU_G130_DP, CU_G130_PN, CU_G150_DP, CU_G150_PN

Can be changed: U, T	**Calculated:** -	**Access level:** 3
Data type: Integer16	**Dynamic index:** -	**Func. diagram:** -
P-Group: Encoder	**Units group:** -	**Unit selection:** -
Not for motor type: -	**Scaling:** -	**Expert list:** 1
Min	**Max**	**Factory setting**
0	8	0

Description: Sets the digital input used for the function "central measuring probe evaluation".
p0680[0]: Digital input, measuring probe 1
p0680[1]: Digital input, measuring probe 2
...
p0680[7]: Digital input, measuring probe 8

Value:
0: No meas probe
1: DI/DO 9 (X122.10/X121.8)
2: DI/DO 10 (X122.12/X121.10)
3: DI/DO 11 (X122.13/X121.11)
4: DI/DO 13 (X132.10/X131.2)
5: DI/DO 14 (X132.12/X131.4)
6: DI/DO 15 (X132.13/X131.5)
7: DI/DO 8 (X122.9/X121.7)
8: DI/DO 12 (X132.9/X131.1)

Dependency: Refer to: p0728

Notice: To the terminal designation:
The first designation is valid for CU320, the second for CU310.
To select the values:
For Cx32, NX10 and NX15, only DI/DO 8, 9, 10, 11 can be selected as fast inputs (refer to the Equipment Manual).

Note: DI/DO: Bidirectional Digital Input/Output
Prerequisite: The DI/DO must be set as input (p0728.x = 0).
If a parameter change is rejected, a check should be performed as to whether the input terminal is already being used in p0488, p0489, p0493, p0494, p0495, p0580, p2517 or p2518.

p0681 BI: Central measuring probe, synchronizing signal signal source / Cen meas sync_sig

CU_G130_DP, CU_G130_PN, CU_G150_DP, CU_G150_PN

Can be changed: T	**Calculated:** -	**Access level:** 3
Data type: Unsigned32 / Binary	**Dynamic index:** -	**Func. diagram:** -
P-Group: Commands	**Units group:** -	**Unit selection:** -
Not for motor type: -	**Scaling:** -	**Expert list:** 1
Min	**Max**	**Factory setting**
-	-	0

Description: Sets the signal source for the synchronizing signal (SYN) of the function "central measuring probe evaluation".
The signal is used to synchronize the common system time between the master and slave.

Notice: The parameter may be protected as a result of p0922 or p2079 and cannot be changed.

p0682 CI: Central measuring probe, control word signal source / Cen meas STW S_src

CU_G130_DP, CU_G130_PN, CU_G150_DP, CU_G150_PN

Can be changed: T	**Calculated:** -	**Access level:** 3
Data type: Unsigned32 / Integer16	**Dynamic index:** -	**Func. diagram:** -
P-Group: Displays, signals	**Units group:** -	**Unit selection:** -
Not for motor type: -	**Scaling:** -	**Expert list:** 1
Min	**Max**	**Factory setting**
-	-	0

Description: Sets the signal source for the control word of the function "central measuring probe evaluation".

© Siemens AG 2012 All Rights Reserved

p0684 Central measuring probe evaluation technique / Cen meas eval_tech

CU_G130_DP, CU_G130_PN, CU_G150_DP, CU_G150_PN

Can be changed: U, T	**Calculated:** -	**Access level:** 3
Data type: Integer16	**Dynamic index:** -	**Func. diagram:** -
P-Group: Encoder	**Units group:** -	**Unit selection:** -
Not for motor type: -	**Scaling:** -	**Expert list:** 1
Min	**Max**	**Factory setting**
0	16	0

Description: Sets the evaluation technique for the "central measuring probe evaluation" function.

Value:
0: Measurement with handshake
1: Measurement without handshake, 2 edges
16: Measurement without handshake, more than 2 edges

Notice:
Re p0684 = 16:
This evaluation procedure is only activated after parameter save and POWER ON.

Note:
During measurement without a handshake, the probe may have a higher evaluation frequency.
The setting "Measurement without handshake" must be supported by the higher-level control. This setting cannot be used for SIMOTION D with integrated SINAMICS or with CX32.
Re p0684 = 0:
Changing this evaluation procedure to p0684 = 1 is possible in the RUN state.
Changing this evaluation procedure to p0684 = 16 is only activated after parameter save and POWER ON.
Permissible combinations in p0922 are: p0922 = 391, 392, 393 or 394
Re p0684 = 1:
Changing this evaluation procedure to p0684 = 0 is possible in the RUN state.
Changing this evaluation procedure to p0684 = 16 is only activated after parameter save and POWER ON.
Permissible combinations in p0922 are: p0922 = 391, 392, 393 or 394
Re p0684 = 16:
Changing this evaluation procedure to p0684 = 0 or to p0684 = 1 is only activated after parameter save and POWER ON.
Permissible combinations in p0922 are: p0922 = 395

r0685 Central measuring probe, control word display / Cen meas STW disp

CU_G130_DP, CU_G130_PN, CU_G150_DP, CU_G150_PN

Can be changed: -	**Calculated:** -	**Access level:** 3
Data type: Unsigned16	**Dynamic index:** -	**Func. diagram:** -
P-Group: Commands	**Units group:** -	**Unit selection:** -
Not for motor type: -	**Scaling:** -	**Expert list:** 1
Min	**Max**	**Factory setting**
-	-	-

Description: Displays the control word for the function "central measuring probe evaluation".

Bit field:

Bit	Signal name	1 signal	0 signal	FP
00	Falling edge, measuring probe 1	Yes	No	-
01	Falling edge, measuring probe 2	Yes	No	-
02	Falling edge, measuring probe 3	Yes	No	-
03	Falling edge, measuring probe 4	Yes	No	-
04	Falling edge, measuring probe 5	Yes	No	-
05	Falling edge, measuring probe 6	Yes	No	-
06	Falling edge, measuring probe 7	Yes	No	-
07	Falling edge, measuring probe 8	Yes	No	-
08	Rising edge, measuring probe 1	Yes	No	-
09	Rising edge, measuring probe 2	Yes	No	-
10	Rising edge, measuring probe 3	Yes	No	-
11	Rising edge, measuring probe 4	Yes	No	-
12	Rising edge, measuring probe 5	Yes	No	-
13	Rising edge, measuring probe 6	Yes	No	-
14	Rising edge, measuring probe 7	Yes	No	-
15	Rising edge, measuring probe 8	Yes	No	-

© Siemens AG 2012 All Rights Reserved

r0686[0...7] CO: Central measuring probe, measuring time rising edge / CenMeas t_meas 0/1

CU_G130_DP, CU_G130_PN, CU_G150_DP, CU_G150_PN	**Can be changed:** -	**Calculated:** -	**Access level:** 3
	Data type: Unsigned16	**Dynamic index:** -	**Func. diagram:** -
	P-Group: Displays, signals	**Units group:** -	**Unit selection:** -
	Not for motor type: -	**Scaling:** -	**Expert list:** 1
	Min	**Max**	**Factory setting**
	-	-	-

Description: Displays the measuring time for a rising edge at the digital input for the "central measuring probe evaluation" function.
The measuring time is specified as 16-bit value with a resolution of 0.25 µs.
r0686[0]: Measuring time, rising edge measuring probe 1
r0686[1]: Measuring time, rising edge measuring probe 2
r0686[2]: Measuring time, rising edge measuring probe 3
r0686[3]: Measuring time, rising edge measuring probe 4
r0686[4]: Measuring time, rising edge measuring probe 5
r0686[5]: Measuring time, rising edge measuring probe 6
r0686[6]: Measuring time, rising edge measuring probe 7
r0686[7]: Measuring time, rising edge measuring probe 8

Note: The parameter is only active for the evaluation procedure p0684 = 0, 1.
For p0684 = 16, r0686[0...7] = 0 is displayed.

r0687[0...7] CO: Central measuring probe, measuring time falling edge / CenMeas t_meas 1/0

CU_G130_DP, CU_G130_PN, CU_G150_DP, CU_G150_PN	**Can be changed:** -	**Calculated:** -	**Access level:** 3
	Data type: Unsigned16	**Dynamic index:** -	**Func. diagram:** -
	P-Group: Displays, signals	**Units group:** -	**Unit selection:** -
	Not for motor type: -	**Scaling:** -	**Expert list:** 1
	Min	**Max**	**Factory setting**
	-	-	-

Description: Displays the measuring time for a falling edge at the digital input for the "central measuring probe evaluation" function.
The measuring time is specified as 16-bit value with a resolution of 0.25 µs.
r0687[0]: Measuring time, falling edge measuring probe 1
r0687[1]: Measuring time, falling edge measuring probe 2
r0687[2]: Measuring time, falling edge measuring probe 3
r0687[3]: Measuring time, falling edge measuring probe 4
r0687[4]: Measuring time, falling edge measuring probe 5
r0687[5]: Measuring time, falling edge measuring probe 6
r0687[6]: Measuring time, falling edge measuring probe 7
r0687[7]: Measuring time, falling edge measuring probe 8

Note: The parameter is only active for the evaluation procedure p0684 = 0, 1.
For p0684 = 16, r0687[0...7] = 0 is displayed.

r0688 CO: Central measuring probe, status word display / Cen meas ZSW disp

CU_G130_DP, CU_G130_PN, CU_G150_DP, CU_G150_PN	**Can be changed:** -	**Calculated:** -	**Access level:** 3
	Data type: Unsigned16	**Dynamic index:** -	**Func. diagram:** -
	P-Group: Displays, signals	**Units group:** -	**Unit selection:** -
	Not for motor type: -	**Scaling:** -	**Expert list:** 1
	Min	**Max**	**Factory setting**
	-	-	-

Description: Displays the status word for the function "central measuring probe evaluation".

© Siemens AG 2012 All Rights Reserved

Bit field:	Bit	Signal name	1 signal	0 signal	FP
	00	Digital input, measuring probe 1	High	Low	-
	01	Digital input, measuring probe 2	High	Low	-
	02	Digital input, measuring probe 3	High	Low	-
	03	Digital input, measuring probe 4	High	Low	-
	04	Digital input, measuring probe 5	High	Low	-
	05	Digital input, measuring probe 6	High	Low	-
	06	Digital input, measuring probe 7	High	Low	-
	07	Digital input, measuring probe 8	High	Low	-
	08	Sub-sampling, measuring probe 1	High	Low	-
	09	Sub-sampling, measuring probe 2	High	Low	-
	10	Sub-sampling, measuring probe 3	High	Low	-
	11	Sub-sampling, measuring probe 4	High	Low	-
	12	Sub-sampling, measuring probe 5	High	Low	-
	13	Sub-sampling, measuring probe 6	High	Low	-
	14	Sub-sampling, measuring probe 7	High	Low	-
	15	Sub-sampling, measuring probe 8	High	Low	-

p0700[0...n] Macro Binector Input (BI) / Macro BI

B_INF, VECTOR_G

Can be changed: C2(1), T | **Calculated:** - | **Access level:** 1
Data type: Unsigned32 | **Dynamic index:** CDS, p0170 | **Func. diagram:** -
P-Group: Commands | **Units group:** - | **Unit selection:** -
Not for motor type: - | **Scaling:** - | **Expert list:** 1

Min	Max	Factory setting
0	999999	0

Description: Runs the corresponding macro files.
The binector inputs of the corresponding command data set are appropriately interconnected.
The selected macro file must be available on the memory card/device memory.
Example:
p0700 = 6 --> macro file PM000006.ACX is run.

Dependency: Refer to: p0015, p1000, p1500, r8571

Caution: When executing a specific macro, the corresponding programmed settings are made and become active.

Notice: No errors were issued during quick commissioning (p3900 = 1) when writing to parameters of the QUICK_IBN group!

Note: The macros in the specified directory are displayed in r8571. r8571 is not in the expert list of the commissioning software.
Macros available as standard are described in the technical documentation of the particular product.
BI: Binector Input
CDS: Command Data Set

p0700 Macro Binector Input (BI) for TMs / Macro BI TM

TB30, TM31

Can be changed: C2(1), T | **Calculated:** - | **Access level:** 1
Data type: Unsigned32 | **Dynamic index:** - | **Func. diagram:** -
P-Group: Commands | **Units group:** - | **Unit selection:** -
Not for motor type: - | **Scaling:** - | **Expert list:** 1

Min	Max	Factory setting
0	999999	0

Description: Runs the corresponding macro files.
The selected macro file must be available on the memory card/device memory.
Example:
p0700 = 6 --> macro file PM000006.ACX is run.

Dependency: Refer to: r8571

Caution: When executing a specific macro, the corresponding programmed settings are made and become active.

Notice: No errors were issued during quick commissioning (p3900 = 1) when writing to parameters of the QUICK_IBN group!

© Siemens AG 2012 All Rights Reserved

Note: The macros in the specified directory are displayed in r8571. r8571 is not in the expert list of the commissioning software.
Macros available as standard are described in the technical documentation of the particular product.
BI: Binector Input
CDS: Command Data Set

r0721 CU digital inputs, terminal actual value / CU DI actual value

CU_G130_DP, CU_G130_PN, CU_G150_DP, CU_G150_PN

Can be changed: -	**Calculated:** -	**Access level:** 2
Data type: Unsigned32	**Dynamic index:** -	**Func. diagram:** 1510, 2020, 2030, 2031, 2100, 2120, 2130, 2131, 2132, 2133
P-Group: Commands	**Units group:** -	**Unit selection:** -
Not for motor type: -	**Scaling:** -	**Expert list:** 1
Min	**Max**	**Factory setting**
-	-	-

Description: Displays the actual value at the digital inputs.
This means that the actual input signal can be checked at terminal DI x or DI/DO x prior to switching from the simulation mode (p0795.x = 1) to terminal mode (p0795.x = 0).

Bit field:

Bit	Signal name	1 signal	0 signal	FP
00	DI 0 (X122.1/X121.1)	High	Low	-
01	DI 1 (X122.2/X121.2)	High	Low	-
02	DI 2 (X122.3/X121.3)	High	Low	-
03	DI 3 (X122.4/X121.4)	High	Low	-
04	DI 4 (X132.1 / -)	High	Low	-
05	DI 5 (X132.2 / -)	High	Low	-
06	DI 6 (X132.3 / -)	High	Low	-
07	DI 7 (X132.4 / -)	High	Low	-
08	DI/DO 8 (X122.9/X121.7)	High	Low	-
09	DI/DO 9 (X122.10/X121.8)	High	Low	-
10	DI/DO 10 (X122.12/X121.10)	High	Low	-
11	DI/DO 11 (X122.13/X121.11)	High	Low	-
12	DI/DO 12 (X132.9/X131.1)	High	Low	-
13	DI/DO 13 (X132.10/X131.2)	High	Low	-
14	DI/DO 14 (X132.12/X131.4)	High	Low	-
15	DI/DO 15 (X132.13/X131.5)	High	Low	-
16	DI 16 (X122.5/X120.3)	High	Low	-
17	DI 17 (X122.6/X120.4)	High	Low	-
20	DI 20 (X132.5/X120.9)	High	Low	-
21	DI 21 (X132.6/X120.10)	High	Low	-

Notice: To the terminal designation:
The first designation is valid for CU320, the second for CU310.

Note: If a DI/DO is parameterized as output (p0728.x = 1), then r0721.x = 0 is displayed.
DI: Digital Input
DI/DO: Bidirectional Digital Input/Output

r0722.0...21 CO/BO: CU digital inputs, status / CU DI status

CU_G130_DP, CU_G130_PN, CU_G150_DP, CU_G150_PN

Can be changed: -	**Calculated:** -	**Access level:** 1
Data type: Unsigned32	**Dynamic index:** -	**Func. diagram:** 1510, 2020, 2030, 2031, 2100, 2120, 2130, 2131, 2132, 2133
P-Group: Commands	**Units group:** -	**Unit selection:** -
Not for motor type: -	**Scaling:** -	**Expert list:** 1
Min	**Max**	**Factory setting**
-	-	-

Description: Displays the status of the digital inputs.

© Siemens AG 2012 All Rights Reserved

Bit field:

Bit	Signal name	1 signal	0 signal	FP
00	DI 0 (X122.1/X121.1)	High	Low	-
01	DI 1 (X122.2/X121.2)	High	Low	-
02	DI 2 (X122.3/X121.3)	High	Low	-
03	DI 3 (X122.4/X121.4)	High	Low	-
04	DI 4 (X132.1 / -)	High	Low	-
05	DI 5 (X132.2 / -)	High	Low	-
06	DI 6 (X132.3 / -)	High	Low	-
07	DI 7 (X132.4 / -)	High	Low	-
08	DI/DO 8 (X122.9/X121.7)	High	Low	-
09	DI/DO 9 (X122.10/X121.8)	High	Low	-
10	DI/DO 10 (X122.12/X121.10)	High	Low	-
11	DI/DO 11 (X122.13/X121.11)	High	Low	-
12	DI/DO 12 (X132.9/X131.1)	High	Low	-
13	DI/DO 13 (X132.10/X131.2)	High	Low	-
14	DI/DO 14 (X132.12/X131.4)	High	Low	-
15	DI/DO 15 (X132.13/X131.5)	High	Low	-
16	DI 16 (X122.5/X120.3)	High	Low	-
17	DI 17 (X122.6/X120.4)	High	Low	-
20	DI 20 (X132.5/X120.9)	High	Low	-
21	DI 21 (X132.6/X120.10)	High	Low	-

Dependency: Refer to: r0723

Notice: To the terminal designation:
The first designation is valid for CU320, the second for CU310.

Note: DI: Digital Input
DI/DO: Bidirectional Digital Input/Output

r0723.0...21 CO/BO: CU digital inputs, status inverted / CU DI status inv

CU_G130_DP, CU_G130_PN, CU_G150_DP, CU_G150_PN

Can be changed: -	**Calculated:** -	**Access level:** 1
Data type: Unsigned32	**Dynamic index:** -	**Func. diagram:** 1510, 2020, 2030, 2031, 2100, 2120, 2130, 2131, 2132, 2133
P-Group: Commands	**Units group:** -	**Unit selection:** -
Not for motor type: -	**Scaling:** -	**Expert list:** 1
Min	**Max**	**Factory setting**
-	-	-

Description: Displays the inverted status of the digital inputs.

Bit field:

Bit	Signal name	1 signal	0 signal	FP
00	DI 0 (X122.1/X121.1)	High	Low	-
01	DI 1 (X122.2/X121.2)	High	Low	-
02	DI 2 (X122.3/X121.3)	High	Low	-
03	DI 3 (X122.4/X121.4)	High	Low	-
04	DI 4 (X132.1 / -)	High	Low	-
05	DI 5 (X132.2 / -)	High	Low	-
06	DI 6 (X132.3 / -)	High	Low	-
07	DI 7 (X132.4 / -)	High	Low	-
08	DI/DO 8 (X122.9/X121.7)	High	Low	-
09	DI/DO 9 (X122.10/X121.8)	High	Low	-
10	DI/DO 10 (X122.12/X121.10)	High	Low	-
11	DI/DO 11 (X122.13/X121.11)	High	Low	-
12	DI/DO 12 (X132.9/X131.1)	High	Low	-
13	DI/DO 13 (X132.10/X131.2)	High	Low	-
14	DI/DO 14 (X132.12/X131.4)	High	Low	-
15	DI/DO 15 (X132.13/X131.5)	High	Low	-
16	DI 16 (X122.5/X120.3)	High	Low	-
17	DI 17 (X122.6/X120.4)	High	Low	-
20	DI 20 (X132.5/X120.9)	High	Low	-
21	DI 21 (X132.6/X120.10)	High	Low	-

Dependency: Refer to: r0722

© Siemens AG 2012 All Rights Reserved

Notice: To the terminal designation:
The first designation is valid for CU320, the second for CU310.

Note: DI: Digital Input
DI/DO: Bidirectional Digital Input/Output

p0728 CU, set input or output / CU DI or DO

CU_G130_DP, CU_G130_PN, CU_G150_DP, CU_G150_PN

Can be changed: T	**Calculated:** -	**Access level:** 1
Data type: Unsigned32	**Dynamic index:** -	**Func. diagram:** 1510, 2030, 2031, 2130, 2131, 2132, 2133
P-Group: Commands	**Units group:** -	**Unit selection:** -
Not for motor type: -	**Scaling:** -	**Expert list:** 1
Min	**Max**	**Factory setting**
-	-	0000 0000 0000 0000 bin

Description: Sets the bidirectional digital inputs/outputs as an input or output.

Bit field:

Bit	Signal name	1 signal	0 signal	FP
08	DI/DO 8 (X122.9/X121.7)	Output	Input	-
09	DI/DO 9 (X122.10/X121.8)	Output	Input	-
10	DI/DO 10 (X122.12/X121.10)	Output	Input	-
11	DI/DO 11 (X122.13/X121.11)	Output	Input	-
12	DI/DO 12 (X132.9/X131.1)	Output	Input	-
13	DI/DO 13 (X132.10/X131.2)	Output	Input	-
14	DI/DO 14 (X132.12/X131.4)	Output	Input	-
15	DI/DO 15 (X132.13/X131.5)	Output	Input	-

Notice: To the terminal designation:
The first designation is valid for CU320, the second for CU310.

Note: DI/DO: Bidirectional Digital Input/Output

r0729 CU digital outputs access authority / CU DO acc_auth

CU_G130_DP, CU_G130_PN, CU_G150_DP, CU_G150_PN

Can be changed: -	**Calculated:** -	**Access level:** 1
Data type: Unsigned32	**Dynamic index:** -	**Func. diagram:** 2030, 2031, 2130, 2131, 2132, 2133
P-Group: Commands	**Units group:** -	**Unit selection:** -
Not for motor type: -	**Scaling:** -	**Expert list:** 1
Min	**Max**	**Factory setting**
-	-	-

Description: Displays the access authority at the digital outputs.
Bit = 1:
The control has access authority to the digital output via PROFIBUS or direct access.
Bit = 0:
The drive has access authority to the digital output or the digital input/output is not set as digital output or is not available.

Bit field:

Bit	Signal name	1 signal	0 signal	FP
08	DI/DO 8 (X122.9/X121.7)	High	Low	-
09	DI/DO 9 (X122.10/X121.8)	High	Low	-
10	DI/DO 10 (X122.12/X121.10)	High	Low	-
11	DI/DO 11 (X122.13/X121.11)	High	Low	-
12	DI/DO 12 (X132.9/X131.1)	High	Low	-
13	DI/DO 13 (X132.10/X131.2)	High	Low	-
14	DI/DO 14 (X132.12/X131.4)	High	Low	-
15	DI/DO 15 (X132.13/X131.5)	High	Low	-

Dependency: Refer to: p0728, p0738, p0739, p0740, p0741, p0742, p0743, p0744, p0745, r0747, p0748

Notice: To the terminal designation:
The first designation is valid for CU320, the second for CU310.

Note: The DI/DO must be connected as output (p0728).
DI/DO: Bidirectional Digital Input/Output

© Siemens AG 2012 All Rights Reserved

p0738 BI: CU, signal source for terminal DI/DO 8 / CU S_src DI/DO 8

CU_G130_DP, CU_G130_PN, CU_G150_DP, CU_G150_PN	**Can be changed:** U, T	**Calculated:** -	**Access level:** 1
	Data type: Unsigned32 / Binary	**Dynamic index:** -	**Func. diagram:** 1510, 2030, 2130
	P-Group: Commands	**Units group:** -	**Unit selection:** -
	Not for motor type: -	**Scaling:** -	**Expert list:** 1
	Min	**Max**	**Factory setting**
	-	-	0

Description: Sets the signal source for terminal DI/DO 8 (X122.9 / X121.7).
To the terminal designation:
The first designation is valid for CU320, the second for CU310.

Notice: The parameter may be protected as a result of p0922 or p2079 and cannot be changed.

Note: Prerequisite: The DI/DO must be set as an output (p0728.8 = 1).
DI/DO: Bidirectional Digital Input/Output

p0739 BI: CU, signal source for terminal DI/DO 9 / CU S_src DI/DO 9

CU_G130_DP, CU_G130_PN, CU_G150_DP, CU_G150_PN	**Can be changed:** U, T	**Calculated:** -	**Access level:** 1
	Data type: Unsigned32 / Binary	**Dynamic index:** -	**Func. diagram:** 2030, 2130
	P-Group: Commands	**Units group:** -	**Unit selection:** -
	Not for motor type: -	**Scaling:** -	**Expert list:** 1
	Min	**Max**	**Factory setting**
	-	-	0

Description: Sets the signal source for terminal DI/DO 9 (X122.10 / X121.8).
To the terminal designation:
The first designation is valid for CU320, the second for CU310.

Notice: The parameter may be protected as a result of p0922 or p2079 and cannot be changed.

Note: Prerequisite: The DI/DO must be set as an output (p0728.9 = 1).
DI/DO: Bidirectional Digital Input/Output

p0740 BI: CU, signal source for terminal DI/DO 10 / CU S_src DI/DO 10

CU_G130_DP, CU_G130_PN, CU_G150_DP, CU_G150_PN	**Can be changed:** U, T	**Calculated:** -	**Access level:** 1
	Data type: Unsigned32 / Binary	**Dynamic index:** -	**Func. diagram:** 2031, 2131
	P-Group: Commands	**Units group:** -	**Unit selection:** -
	Not for motor type: -	**Scaling:** -	**Expert list:** 1
	Min	**Max**	**Factory setting**
	-	-	0

Description: Sets the signal source for terminal DI/DO 10 (X122.12 / X121.10).
To the terminal designation:
The first designation is valid for CU320, the second for CU310.

Notice: The parameter may be protected as a result of p0922 or p2079 and cannot be changed.

Note: Prerequisite: The DI/DO must be set as an output (p0728.10 = 1).
DI/DO: Bidirectional Digital Input/Output

p0741 BI: CU, signal source for terminal DI/DO 11 / CU S_src DI/DO 11

CU_G130_DP, CU_G130_PN, CU_G150_DP, CU_G150_PN	**Can be changed:** U, T	**Calculated:** -	**Access level:** 1
	Data type: Unsigned32 / Binary	**Dynamic index:** -	**Func. diagram:** 1510, 2031, 2131
	P-Group: Commands	**Units group:** -	**Unit selection:** -
	Not for motor type: -	**Scaling:** -	**Expert list:** 1
	Min	**Max**	**Factory setting**
	-	-	0

Description: Sets the signal source for terminal DI/DO 11 (X122.13 / X121.11).

© Siemens AG 2012 All Rights Reserved

To the terminal designation:
The first designation is valid for CU320, the second for CU310.

Notice: The parameter may be protected as a result of p0922 or p2079 and cannot be changed.

Note: Prerequisite: The DI/DO must be set as an output (p0728.11 = 1).
DI/DO: Bidirectional Digital Input/Output

p0742 BI: CU, signal source for terminal DI/DO 12 / CU S_src DI/DO 12

CU_G130_DP, CU_G130_PN, CU_G150_DP, CU_G150_PN

Can be changed: U, T	**Calculated:** -	**Access level:** 1
Data type: Unsigned32 / Binary	**Dynamic index:** -	**Func. diagram:** 1510, 2132
P-Group: Commands	**Units group:** -	**Unit selection:** -
Not for motor type: -	**Scaling:** -	**Expert list:** 1
Min	**Max**	**Factory setting**
-	-	0

Description: Sets the signal source for terminal DI/DO 12 (X132.9 / X131.1).
To the terminal designation:
The first designation is valid for CU320, the second for CU310.

Notice: The parameter may be protected as a result of p0922 or p2079 and cannot be changed.

Note: Prerequisite: The DI/DO must be set as an output (p0728.12 = 1).
DI/DO: Bidirectional Digital Input/Output

p0743 BI: CU, signal source for terminal DI/DO 13 / CU S_src DI/DO 13

CU_G130_DP, CU_G130_PN, CU_G150_DP, CU_G150_PN

Can be changed: U, T	**Calculated:** -	**Access level:** 1
Data type: Unsigned32 / Binary	**Dynamic index:** -	**Func. diagram:** 2132
P-Group: Commands	**Units group:** -	**Unit selection:** -
Not for motor type: -	**Scaling:** -	**Expert list:** 1
Min	**Max**	**Factory setting**
-	-	0

Description: Sets the signal source for terminal DI/DO 13 (X132.10 / X131.2).
To the terminal designation:
The first designation is valid for CU320, the second for CU310.

Notice: The parameter may be protected as a result of p0922 or p2079 and cannot be changed.

Note: Prerequisite: The DI/DO must be set as an output (p0728.13 = 1).
DI/DO: Bidirectional Digital Input/Output

p0744 BI: CU, signal source for terminal DI/DO 14 / CU S_src DI/DO 14

CU_G130_DP, CU_G130_PN, CU_G150_DP, CU_G150_PN

Can be changed: U, T	**Calculated:** -	**Access level:** 1
Data type: Unsigned32 / Binary	**Dynamic index:** -	**Func. diagram:** 2133
P-Group: Commands	**Units group:** -	**Unit selection:** -
Not for motor type: -	**Scaling:** -	**Expert list:** 1
Min	**Max**	**Factory setting**
-	-	0

Description: Sets the signal source for terminal DI/DO 14 (X132.12 / X131.4).
To the terminal designation:
The first designation is valid for CU320, the second for CU310.

Notice: The parameter may be protected as a result of p0922 or p2079 and cannot be changed.

Note: Prerequisite: The DI/DO must be set as an output (p0728.14 = 1).
DI/DO: Bidirectional Digital Input/Output

© Siemens AG 2012 All Rights Reserved

p0745 BI: CU, signal source for terminal DI/DO 15 / CU S_src DI/DO 15

CU_G130_DP, CU_G130_PN, CU_G150_DP, CU_G150_PN

Can be changed: U, T	**Calculated:** -	**Access level:** 1
Data type: Unsigned32 / Binary	**Dynamic index:** -	**Func. diagram:** 1510, 2133
P-Group: Commands	**Units group:** -	**Unit selection:** -
Not for motor type: -	**Scaling:** -	**Expert list:** 1
Min	**Max**	**Factory setting**
-	-	0

Description: Sets the signal source for terminal DI/DO 15 (X132.13 / X131.5you).
To the terminal designation:
The first designation is valid for CU320, the second for CU310.

Notice: The parameter may be protected as a result of p0922 or p2079 and cannot be changed.

Note: Prerequisite: The DI/DO must be set as an output (p0728.15 = 1).
DI/DO: Bidirectional Digital Input/Output

r0747 CU, digital outputs status / CU DO status

CU_G130_DP, CU_G130_PN, CU_G150_DP, CU_G150_PN

Can be changed: -	**Calculated:** -	**Access level:** 1
Data type: Unsigned32	**Dynamic index:** -	**Func. diagram:** 2130, 2131, 2132, 2133
P-Group: Commands	**Units group:** -	**Unit selection:** -
Not for motor type: -	**Scaling:** -	**Expert list:** 1
Min	**Max**	**Factory setting**
-	-	-

Description: Displays the status of digital outputs.

Bit field:

Bit	Signal name	1 signal	0 signal	FP
08	DI/DO 8 (X122.9/X121.7)	High	Low	-
09	DI/DO 9 (X122.10/X121.8)	High	Low	-
10	DI/DO 10 (X122.12/X121.10)	High	Low	-
11	DI/DO 11 (X122.13/X121.11)	High	Low	-
12	DI/DO 12 (X132.9/X131.1)	High	Low	-
13	DI/DO 13 (X132.10/X131.2)	High	Low	-
14	DI/DO 14 (X132.12/X131.4)	High	Low	-
15	DI/DO 15 (X132.13/X131.5)	High	Low	-

Notice: To the terminal designation:
The first designation is valid for CU320, the second for CU310.

Note: Inversion using p0748 has been taken into account.
DI/DO: Bidirectional Digital Input/Output

p0748 CU, invert digital outputs / CU DO inv

CU_G130_DP, CU_G130_PN, CU_G150_DP, CU_G150_PN

Can be changed: U, T	**Calculated:** -	**Access level:** 1
Data type: Unsigned32	**Dynamic index:** -	**Func. diagram:** 2030, 2031, 2130, 2131, 2132, 2133
P-Group: Commands	**Units group:** -	**Unit selection:** -
Not for motor type: -	**Scaling:** -	**Expert list:** 1
Min	**Max**	**Factory setting**
-	-	0000 0000 0000 0000 bin

Description: Setting to invert the signals at the digital outputs.

Bit field:

Bit	Signal name	1 signal	0 signal	FP
08	DI/DO 8 (X122.9/X121.7)	Inverted	Not inverted	-
09	DI/DO 9 (X122.10/X121.8)	Inverted	Not inverted	-
10	DI/DO 10 (X122.12/X121.10)	Inverted	Not inverted	-
11	DI/DO 11 (X122.13/X121.11)	Inverted	Not inverted	-
12	DI/DO 12 (X132.9/X131.1)	Inverted	Not inverted	-
13	DI/DO 13 (X132.10/X131.2)	Inverted	Not inverted	-

© Siemens AG 2012 All Rights Reserved

14	DI/DO 14 (X132.12/X131.4)	Inverted	Not inverted	-
15	DI/DO 15 (X132.13/X131.5)	Inverted	Not inverted	-

Notice: If telegram 39x is set via p0922 in SINAMICS Integrated, the inversion of the output has no effect.
To the terminal designation:
The first designation is valid for CU320, the second for CU310.

Note: DI/DO: Bidirectional Digital Input/Output

p0771[0...2] CI: Test sockets signal source / Test skt S_src

CU_G130_DP, CU_G130_PN, CU_G150_DP, CU_G150_PN

Can be changed: U, T	**Calculated:** -	**Access level:** 2
Data type: Unsigned32 / Integer16	**Dynamic index:** -	**Func. diagram:** 8134
P-Group: Terminals	**Units group:** -	**Unit selection:** -
Not for motor type: -	**Scaling:** PERCENT	**Expert list:** 1
Min	**Max**	**Factory setting**
-	-	0

Description: Sets the signal source for the signal to be output at the test sockets.

Index: [0] = T0
[1] = T1
[2] = T2

Dependency: Can only be set when p0776 = 99.
Refer to: r0772, r0774, p0776, p0777, p0778, p0779, p0780, p0783, p0784, r0786

r0772[0...2] Test sockets output signal / TestSktsSignalVal

CU_G130_DP, CU_G130_PN, CU_G150_DP, CU_G150_PN

Can be changed: -	**Calculated:** -	**Access level:** 2
Data type: FloatingPoint32	**Dynamic index:** -	**Func. diagram:** 8134
P-Group: Terminals	**Units group:** -	**Unit selection:** -
Not for motor type: -	**Scaling:** -	**Expert list:** 1
Min	**Max**	**Factory setting**
- [%]	- [%]	- [%]

Description: Displays the actual value of the signal to be output.

Index: [0] = T0
[1] = T1
[2] = T2

Dependency: Refer to: p0771, r0774, p0776, p0777, p0778, p0779, p0780, p0783, p0784, r0786

r0774[0...2] Test sockets output voltage / TestSkts U_output

CU_G130_DP, CU_G130_PN, CU_G150_DP, CU_G150_PN

Can be changed: -	**Calculated:** -	**Access level:** 2
Data type: FloatingPoint32	**Dynamic index:** -	**Func. diagram:** -
P-Group: Terminals	**Units group:** -	**Unit selection:** -
Not for motor type: -	**Scaling:** -	**Expert list:** 1
Min	**Max**	**Factory setting**
- [V]	- [V]	- [V]

Description: Displays the actual output voltage for the test sockets.

Index: [0] = T0
[1] = T1
[2] = T2

Dependency: Refer to: p0771, r0772, p0776, p0777, p0778, p0779, p0780, p0783, p0784, r0786

© Siemens AG 2012 All Rights Reserved

p0776[0...2] Test socket mode / Test skt mode

CU_G130_DP, CU_G130_PN, CU_G150_DP, CU_G150_PN

Can be changed: U, T	**Calculated:** -	**Access level:** 4
Data type: Integer16	**Dynamic index:** -	**Func. diagram:** 8134
P-Group: Terminals	**Units group:** -	**Unit selection:** -
Not for motor type: -	**Scaling:** -	**Expert list:** 1
Min	**Max**	**Factory setting**
96	99	99

Description: Sets the mode for the test sockets.

Value:
96: Physical address (32-bit integer signal unsigned)
97: Physical address (32-bit integer signal)
98: Physical address (32-bit floating-point signal)
99: BICO signal

Index:
[0] = T0
[1] = T1
[2] = T2

Dependency: Refer to: p0771, r0772, r0774, p0777, p0778, p0779, p0780, p0783, p0784, r0786, p0788, p0789, r0790

p0777[0...2] Test socket characteristic value x1 / Test skt char x1

CU_G130_DP, CU_G130_PN, CU_G150_DP, CU_G150_PN

Can be changed: U, T	**Calculated:** -	**Access level:** 2
Data type: FloatingPoint32	**Dynamic index:** -	**Func. diagram:** 8134
P-Group: Terminals	**Units group:** -	**Unit selection:** -
Not for motor type: -	**Scaling:** -	**Expert list:** 1
Min	**Max**	**Factory setting**
-100000.00 [%]	100000.00 [%]	0.00 [%]

Description: The scaling characteristic for the test sockets is defined using two points.
This parameter specifies the x coordinate (percentage) of the first point on the characteristic.

Index:
[0] = T0
[1] = T1
[2] = T2

Dependency: Can only be set when p0776 = 99.
Refer to: p0778, p0779, p0780, r0786

Note: The value 0.00 % corresponds to 2.49 V.

p0778[0...2] Test socket characteristic value y1 / Test skt char y1

CU_G130_DP, CU_G130_PN, CU_G150_DP, CU_G150_PN

Can be changed: U, T	**Calculated:** -	**Access level:** 2
Data type: FloatingPoint32	**Dynamic index:** -	**Func. diagram:** 8134
P-Group: Terminals	**Units group:** -	**Unit selection:** -
Not for motor type: -	**Scaling:** -	**Expert list:** 1
Min	**Max**	**Factory setting**
0.00 [V]	4.98 [V]	2.49 [V]

Description: The scaling characteristic for the test sockets is defined using two points. This parameter specifies the y coordinate (output voltage) of the first point on the characteristic.

Index:
[0] = T0
[1] = T1
[2] = T2

Dependency: Can only be set when p0776 = 99.
Refer to: p0777, p0779, p0780, r0786

© Siemens AG 2012 All Rights Reserved

p0779[0...2] Test socket characteristic value x2 / Test skt char x2

CU_G130_DP, CU_G130_PN, CU_G150_DP, CU_G150_PN

Can be changed: U, T	**Calculated:** -	**Access level:** 2
Data type: FloatingPoint32	**Dynamic index:** -	**Func. diagram:** 8134
P-Group: Terminals	**Units group:** -	**Unit selection:** -
Not for motor type: -	**Scaling:** -	**Expert list:** 1
Min	**Max**	**Factory setting**
-100000.00 [%]	427.9E9 [%]	100.00 [%]

Description: The scaling characteristic for the test sockets is defined using two points. This parameter specifies the x coordinate (percentage) of the second point on the characteristic.

Index:
[0] = T0
[1] = T1
[2] = T2

Dependency: Can only be set when p0776 = 99.
Refer to: p0777, p0778, p0780, r0786

Note: The value 100.00 % corresponds to 4.98 V.

p0780[0...2] Test socket characteristic value y2 / Test skt char y2

CU_G130_DP, CU_G130_PN, CU_G150_DP, CU_G150_PN

Can be changed: U, T	**Calculated:** -	**Access level:** 2
Data type: FloatingPoint32	**Dynamic index:** -	**Func. diagram:** 8134
P-Group: Terminals	**Units group:** -	**Unit selection:** -
Not for motor type: -	**Scaling:** -	**Expert list:** 1
Min	**Max**	**Factory setting**
0.00 [V]	4.98 [V]	4.98 [V]

Description: The scaling characteristic for the test sockets is defined using two points. This parameter specifies the y coordinate (output voltage) of the second point on the characteristic.

Index:
[0] = T0
[1] = T1
[2] = T2

Dependency: Can only be set when p0776 = 99.
Refer to: p0777, p0778, p0779, r0786

p0783[0...2] Test sockets offset / Test skt offset

CU_G130_DP, CU_G130_PN, CU_G150_DP, CU_G150_PN

Can be changed: U, T	**Calculated:** -	**Access level:** 2
Data type: FloatingPoint32	**Dynamic index:** -	**Func. diagram:** 8134
P-Group: Terminals	**Units group:** -	**Unit selection:** -
Not for motor type: -	**Scaling:** -	**Expert list:** 1
Min	**Max**	**Factory setting**
-4.98 [V]	4.98 [V]	0.00 [V]

Description: Sets an additional offset for the test sockets.

Index:
[0] = T0
[1] = T1
[2] = T2

p0784[0...2] Test socket limit on/off / TestSktLim on/off

CU_G130_DP, CU_G130_PN, CU_G150_DP, CU_G150_PN

Can be changed: U, T	**Calculated:** -	**Access level:** 2
Data type: Integer16	**Dynamic index:** -	**Func. diagram:** 8134
P-Group: Terminals	**Units group:** -	**Unit selection:** -
Not for motor type: -	**Scaling:** -	**Expert list:** 1
Min	**Max**	**Factory setting**
0	1	0

Description: Sets the limit for a signal to be output via test sockets.

Value:
0: Limiting off
1: Limiting on

© Siemens AG 2012 All Rights Reserved

Index: [0] = T0
[1] = T1
[2] = T2

Note: Limiting on:
If signals are output outside the permissible measuring range, the signal is limited to 4.98 V or to 0 V.
Limiting off:
If signals are output outside the permissible measuring range, this causes signal overflow. In the case of signal overflow, the signal jumps from 0 V to 4.98 V or from 4.98 V to 0 V.

r0786[0...2] Test socket scaling per volt / TestSktScale/Volt

CU_G130_DP, CU_G130_PN, CU_G150_DP, CU_G150_PN

Can be changed: -	**Calculated:** -	**Access level:** 2
Data type: FloatingPoint32	**Dynamic index:** -	**Func. diagram:** 8134
P-Group: Terminals	**Units group:** -	**Unit selection:** -
Not for motor type: -	**Scaling:** -	**Expert list:** 1
Min	**Max**	**Factory setting**
-	-	-

Description: Displays the scaling of the signal to be output.
A change in the output voltage by 1 volt corresponds to the value in this parameter. The units are determined by the interconnected test signal.

Index: [0] = T0
[1] = T1
[2] = T2

Dependency: Refer to: p0771, r0772, r0774, p0777, p0778, p0779, p0780, p0783, p0784

Note: Example:
r0786[0] = 1500.0 and the measuring signal is r0063 (CO: Actual speed smoothed [rpm]).
A change of 1 V at the output of test socket T0 corresponds to 1500.0 [rpm].

p0788[0...2] Test sockets physical address / Test skt PhyAddr

CU_G130_DP, CU_G130_PN, CU_G150_DP, CU_G150_PN

Can be changed: U, T	**Calculated:** -	**Access level:** 4
Data type: Unsigned32	**Dynamic index:** -	**Func. diagram:** -
P-Group: Terminals	**Units group:** -	**Unit selection:** -
Not for motor type: -	**Scaling:** -	**Expert list:** 1
Min	**Max**	**Factory setting**
0000 bin	1111 1111 1111 1111 1111 1111 1111 1111 bin	0000 bin

Description: Sets the physical address to output signals via the test sockets.

Index: [0] = T0
[1] = T1
[2] = T2

Dependency: Changes only become effective if p0776 does not equal 99.
Refer to: p0789, r0790

p0789[0...2] Test sockets physical address gain / TestSktPhyAddrGain

CU_G130_DP, CU_G130_PN, CU_G150_DP, CU_G150_PN

Can be changed: U, T	**Calculated:** -	**Access level:** 4
Data type: FloatingPoint32	**Dynamic index:** -	**Func. diagram:** -
P-Group: Terminals	**Units group:** -	**Unit selection:** -
Not for motor type: -	**Scaling:** -	**Expert list:** 1
Min	**Max**	**Factory setting**
-340.28235E36	340.28235E36	1.00000

Description: Sets the gain of a signal output of a physical address via test sockets.

Index: [0] = T0
[1] = T1
[2] = T2

© Siemens AG 2012 All Rights Reserved

Dependency: Changes only become effective if p0776 does not equal 99.
Refer to: p0788

r0790[0...2] Test sockets physical address signal value / TestSktsPhyAddrVal

CU_G130_DP, CU_G130_PN, CU_G150_DP, CU_G150_PN

Can be changed: -	**Calculated:** -	**Access level:** 4
Data type: Unsigned32	**Dynamic index:** -	**Func. diagram:** -
P-Group: Terminals	**Units group:** -	**Unit selection:** -
Not for motor type: -	**Scaling:** -	**Expert list:** 1
Min	**Max**	**Factory setting**
-	-	-

Description: Displays the actual value of a signal determined via a physical address.

Index:
[0] = T0
[1] = T1
[2] = T2

Dependency: Only effective when p0776 = 97 or p0776 = 96.
Refer to: p0788

p0795 CU digital inputs simulation mode / CU DI simulation

CU_G130_DP, CU_G130_PN, CU_G150_DP, CU_G150_PN

Can be changed: U, T	**Calculated:** -	**Access level:** 2
Data type: Unsigned32	**Dynamic index:** -	**Func. diagram:** 1510, 2020, 2030, 2031, 2100, 2120, 2130, 2131, 2132, 2133
P-Group: Commands	**Units group:** -	**Unit selection:** -
Not for motor type: -	**Scaling:** -	**Expert list:** 1
Min	**Max**	**Factory setting**
-	-	0000 0000 0000 0000 0000 0000 0000 0000 bin

Description: Sets the simulation mode for digital inputs.

Bit field:

Bit	Signal name	1 signal	0 signal	FP
00	DI 0 (X122.1/X121.1)	Simulation	Terminal eval	-
01	DI 1 (X122.2/X121.2)	Simulation	Terminal eval	-
02	DI 2 (X122.3/X121.3)	Simulation	Terminal eval	-
03	DI 3 (X122.4/X121.4)	Simulation	Terminal eval	-
04	DI 4 (X132.1 / -)	Simulation	Terminal eval	-
05	DI 5 (X132.2 / -)	Simulation	Terminal eval	-
06	DI 6 (X132.3 / -)	Simulation	Terminal eval	-
07	DI 7 (X132.4 / -)	Simulation	Terminal eval	-
08	DI/DO 8 (X122.9/X121.7)	Simulation	Terminal eval	-
09	DI/DO 9 (X122.10/X121.8)	Simulation	Terminal eval	-
10	DI/DO 10 (X122.12/X121.10)	Simulation	Terminal eval	-
11	DI/DO 11 (X122.13/X121.11)	Simulation	Terminal eval	-
12	DI/DO 12 (X132.9/X131.1)	Simulation	Terminal eval	-
13	DI/DO 13 (X132.10/X131.2)	Simulation	Terminal eval	-
14	DI/DO 14 (X132.12/X131.4)	Simulation	Terminal eval	-
15	DI/DO 15 (X132.13/X131.5)	Simulation	Terminal eval	-
16	DI 16 (X122.5/X120.3)	Simulation	Terminal eval	-
17	DI 17 (X122.6/X120.4)	Simulation	Terminal eval	-
20	DI 20 (X132.5/X120.9)	Simulation	Terminal eval	-
21	DI 21 (X132.6/X120.10)	Simulation	Terminal eval	-

Dependency: The setpoint for the input signals is specified using p0796.
Refer to: p0796, p9620

Notice: If a digital input is used as signal source for the function "STO" (BI: p9620) then it is not permissible to select the simulation mode and this is rejected.
To the terminal designation:
The first designation stands for CU320, the second for CU310.

© Siemens AG 2012 All Rights Reserved

Note: This parameter is not saved when data is backed-up (p0971, p0977).
DI: Digital Input
DI/DO: Bidirectional Digital Input/Output

p0796 CU digital inputs simulation mode setpoint / CU DI simul setp

CU_G130_DP, CU_G130_PN, CU_G150_DP, CU_G150_PN

Can be changed: U, T	**Calculated:** -	**Access level:** 2
Data type: Unsigned32	**Dynamic index:** -	**Func. diagram:** 1510, 2020, 2030, 2031, 2100, 2120, 2130, 2131, 2132, 2133
P-Group: Commands	**Units group:** -	**Unit selection:** -
Not for motor type: -	**Scaling:** -	**Expert list:** 1
Min -	**Max** -	**Factory setting** 0000 0000 0000 0000 0000 0000 0000 0000 bin

Description: Sets the setpoint for the input signals in the digital input simulation mode.

Bit field:

Bit	Signal name	1 signal	0 signal	FP
00	DI 0 (X122.1/X121.1)	High	Low	-
01	DI 1 (X122.2/X121.2)	High	Low	-
02	DI 2 (X122.3/X121.3)	High	Low	-
03	DI 3 (X122.4/X121.4)	High	Low	-
04	DI 4 (X132.1 / -)	High	Low	-
05	DI 5 (X132.2 / -)	High	Low	-
06	DI 6 (X132.3 / -)	High	Low	-
07	DI 7 (X132.4 / -)	High	Low	-
08	DI/DO 8 (X122.9/X121.7)	High	Low	-
09	DI/DO 9 (X122.10/X121.8)	High	Low	-
10	DI/DO 10 (X122.12/X121.10)	High	Low	-
11	DI/DO 11 (X122.13/X121.11)	High	Low	-
12	DI/DO 12 (X132.9/X131.1)	High	Low	-
13	DI/DO 13 (X132.10/X131.2)	High	Low	-
14	DI/DO 14 (X132.12/X131.4)	High	Low	-
15	DI/DO 15 (X132.13/X131.5)	High	Low	-
16	DI 16 (X122.5/X120.3)	High	Low	-
17	DI 17 (X122.6/X120.4)	High	Low	-
20	DI 20 (X132.5/X120.9)	High	Low	-
21	DI 21 (X132.6/X120.10)	High	Low	-

Dependency: The simulation of a digital input is selected using p0795.
Refer to: p0795

Notice: To the terminal designation:
The first designation is valid for CU320, the second for CU310.

Note: This parameter is not saved when data is backed-up (p0971, p0977).
DI: Digital Input
DI/DO: Bidirectional Digital Input/Output

p0799[0...2] CU inputs/outputs, sampling time / CU I/O t_sampl

CU_G130_DP, CU_G130_PN, CU_G150_DP, CU_G150_PN

Can be changed: C1(3)	**Calculated:** -	**Access level:** 3
Data type: FloatingPoint32	**Dynamic index:** -	**Func. diagram:** 2020, 2030, 2031
P-Group: Commands	**Units group:** -	**Unit selection:** -
Not for motor type: -	**Scaling:** -	**Expert list:** 1
Min 0.00 [µs]	**Max** 5000.00 [µs]	**Factory setting** 4000.00 [µs]

Description: Sets the sampling time for the inputs and outputs of the Control Unit.

Index: [0] = Digital inputs/outputs (DI/DO)
[1] = Not available - analog inputs (AI)
[2] = Not available - analog outputs (AO)

© Siemens AG 2012 All Rights Reserved

Dependency: The parameter can only be modified for p0009 = 3, 29.
Refer to: p0009

Note: The changed sampling time is immediately effective after a completed sub-boot (p0009 -> 0).

p0806 BI: Inhibit master control / PcCtrl inhibit

B_INF, VECTOR_G

Can be changed: T	**Calculated:** -	**Access level:** 3
Data type: Unsigned32 / Binary	**Dynamic index:** -	**Func. diagram:** -
P-Group: Commands	**Units group:** -	**Unit selection:** -
Not for motor type: -	**Scaling:** -	**Expert list:** 1
Min	**Max**	**Factory setting**
-	-	0

Description: Sets the signal source to block the master control.

Dependency: Refer to: r0807

Note: The commissioning software (drive control panel) uses the master control, for example.

r0807.0 BO: Master control active / PcCtrl active

B_INF, VECTOR_G

Can be changed: -	**Calculated:** -	**Access level:** 2
Data type: Unsigned8	**Dynamic index:** -	**Func. diagram:** -
P-Group: Displays, signals	**Units group:** -	**Unit selection:** -
Not for motor type: -	**Scaling:** -	**Expert list:** 1
Min	**Max**	**Factory setting**
-	-	-

Description: Displays what has the master control.
The drive can be controlled via the BICO interconnection or from external (e.g. the commissioning software).

Bit field:

Bit	Signal name	1 signal	0 signal	FP
00	Master control active	Yes	No	5030, 6031

Dependency: Refer to: p0806

Notice: The master control only influences control word 1 and speed setpoint 1. Other control words/setpoints can be transferred from another automation device.

Note: Bit 0 = 0: BICO interconnection active
Bit 0 = 1: Master control for PC/AOP
The commissioning software (drive control panel) uses the master control, for example.

p0809[0...2] Copy Command Data Set CDS / Copy CDS

VECTOR_G

Can be changed: T	**Calculated:** -	**Access level:** 2
Data type: Unsigned8	**Dynamic index:** -	**Func. diagram:** 8560
P-Group: Commands	**Units group:** -	**Unit selection:** -
Not for motor type: -	**Scaling:** -	**Expert list:** 1
Min	**Max**	**Factory setting**
0	15	0

Description: Copies one Command Data Set (CDS) into another.

Index: [0] = Source Command Data Set
[1] = Target Command Data Set
[2] = Start copying procedure

Note: Procedure:
1. In Index 0, enter which command data set should be copied.
2. In Index 1, enter the command data set that is to be copied into.
3. Start copying: Set index 2 from 0 to 1.
p0809[2] is automatically set to 0 when copying is completed.

© Siemens AG 2012 All Rights Reserved

p0810 BI: Command data set selection CDS bit 0 / CDS select., bit 0

VECTOR_G	**Can be changed:** T	**Calculated:** -	**Access level:** 3
	Data type: Unsigned32 / Binary	**Dynamic index:** -	**Func. diagram:** 8560
	P-Group: Commands	**Units group:** -	**Unit selection:** -
	Not for motor type: -	**Scaling:** -	**Expert list:** 1
	Min	**Max**	**Factory setting**
	-	-	0

Description: Sets the signal source to select the Command Data Set bit 0 (CDS bit 0).

Dependency: Refer to: r0050, p0811, r0836

Notice: The parameter may be protected as a result of p0922 or p2079 and cannot be changed.

Note: The Command Data Set selected using the binector inputs is displayed in r0836.
The currently effective command data set is displayed in r0050.
A Command Data Set can be copied using p0809.

p0811 BI: Command data set selection CDS bit 1 / CDS select., bit 1

VECTOR_G	**Can be changed:** T	**Calculated:** -	**Access level:** 3
	Data type: Unsigned32 / Binary	**Dynamic index:** -	**Func. diagram:** 8560
	P-Group: Commands	**Units group:** -	**Unit selection:** -
	Not for motor type: -	**Scaling:** -	**Expert list:** 1
	Min	**Max**	**Factory setting**
	-	-	0

Description: Sets the signal source to select the Command Data Set bit 1 (CDS bit 1).

Dependency: Refer to: r0050, p0810, r0836

Note: The Command Data Set selected using the binector inputs is displayed in r0836.
The currently effective command data set is displayed in r0050.
A Command Data Set can be copied using p0809.

p0819[0...2] Copy Drive Data Set DDS / Copy DDS

VECTOR_G	**Can be changed:** C2(15)	**Calculated:** -	**Access level:** 2
	Data type: Unsigned8	**Dynamic index:** -	**Func. diagram:** 8565
	P-Group: Data sets	**Units group:** -	**Unit selection:** -
	Not for motor type: -	**Scaling:** -	**Expert list:** 1
	Min	**Max**	**Factory setting**
	0	31	0

Description: Copies one Drive Data Set (DDS) into another.

Index: [0] = Source Drive Data Set
[1] = Target Drive Data Set
[2] = Start copying procedure

Note: Procedure:
1. In Index 0, enter which drive data set is to be copied.
2. In Index 1, enter the drive data set data that is to be copied into.
3. Start copying: Set index 2 from 0 to 1.
p0819[2] is automatically set to 0 when copying is completed.

p0820[0...n] BI: Drive Data Set selection DDS bit 0 / DDS select., bit 0

VECTOR_G	**Can be changed:** C2(15), T	**Calculated:** -	**Access level:** 3
	Data type: Unsigned32 / Binary	**Dynamic index:** CDS, p0170	**Func. diagram:** 8565, 8575
	P-Group: Data sets	**Units group:** -	**Unit selection:** -
	Not for motor type: -	**Scaling:** -	**Expert list:** 1
	Min	**Max**	**Factory setting**
	-	-	0

Description: Sets the signal source to select the Drive Data Set, bit 0 (DDS, bit 0).

© Siemens AG 2012 All Rights Reserved

Dependency: Refer to: r0051, r0837
Notice: The parameter may be protected as a result of p0922 or p2079 and cannot be changed.

p0821[0...n] BI: Drive Data Set selection DDS bit 1 / DDS select., bit 1

VECTOR_G	**Can be changed:** C2(15), T	**Calculated:** -	**Access level:** 3
	Data type: Unsigned32 / Binary	**Dynamic index:** CDS, p0170	**Func. diagram:** 8565
	P-Group: Data sets	**Units group:** -	**Unit selection:** -
	Not for motor type: -	**Scaling:** -	**Expert list:** 1
	Min	**Max**	**Factory setting**
	-	-	0

Description: Sets the signal source to select the Drive Data Set, bit 1 (DDS, bit 1).
Dependency: Refer to: r0051, r0837
Notice: The parameter may be protected as a result of p0922 or p2079 and cannot be changed.

p0822[0...n] BI: Drive Data Set selection DDS bit 2 / DDS select., bit 2

VECTOR_G	**Can be changed:** C2(15), T	**Calculated:** -	**Access level:** 3
	Data type: Unsigned32 / Binary	**Dynamic index:** CDS, p0170	**Func. diagram:** 8565
	P-Group: Data sets	**Units group:** -	**Unit selection:** -
	Not for motor type: -	**Scaling:** -	**Expert list:** 1
	Min	**Max**	**Factory setting**
	-	-	0

Description: Sets the signal source to select the Drive Data Set, bit 2 (DDS, bit 2).
Dependency: Refer to: r0051, r0837
Notice: The parameter may be protected as a result of p0922 or p2079 and cannot be changed.

p0823[0...n] BI: Drive Data Set selection DDS bit 3 / DDS select., bit 3

VECTOR_G	**Can be changed:** C2(15), T	**Calculated:** -	**Access level:** 3
	Data type: Unsigned32 / Binary	**Dynamic index:** CDS, p0170	**Func. diagram:** 8565
	P-Group: Data sets	**Units group:** -	**Unit selection:** -
	Not for motor type: -	**Scaling:** -	**Expert list:** 1
	Min	**Max**	**Factory setting**
	-	-	0

Description: Sets the signal source to select the Drive Data Set, bit 3 (DDS, bit 3).
Dependency: Refer to: r0051, r0837
Notice: The parameter may be protected as a result of p0922 or p2079 and cannot be changed.

p0824[0...n] BI: Drive Data Set selection DDS bit 4 / DDS select., bit 4

VECTOR_G	**Can be changed:** C2(15), T	**Calculated:** -	**Access level:** 3
	Data type: Unsigned32 / Binary	**Dynamic index:** CDS, p0170	**Func. diagram:** 8565, 8575
	P-Group: Data sets	**Units group:** -	**Unit selection:** -
	Not for motor type: -	**Scaling:** -	**Expert list:** 1
	Min	**Max**	**Factory setting**
	-	-	0

Description: Sets the signal source to select the Drive Data Set, bit 4 (DDS, bit 4).
Dependency: Refer to: r0051, r0837
Notice: The parameter may be protected as a result of p0922 or p2079 and cannot be changed.

© Siemens AG 2012 All Rights Reserved

p0826[0...n] Motor changeover, motor number / Mot_chng mot No.

VECTOR_G

Can be changed: C2(3)	**Calculated:** -	**Access level:** 2
Data type: Unsigned16	**Dynamic index:** MDS, p0130	**Func. diagram:** 8575
P-Group: Motor	**Units group:** -	**Unit selection:** -
Not for motor type: -	**Scaling:** -	**Expert list:** 1
Min	**Max**	**Factory setting**
0	15	0

Description: Sets the freely-assignable motor number for the motor changeover.

Dependency: Refer to: p0827

Caution: When changing over motor data sets with the same motor number (e.g. star-delta changeover) and for a motor with brake, the motor brake remains open during the changeover.

Note: When the motor data sets are changed over, the following applies:

The same motor number signifies the same thermal model.

For the same motor number, the correction values of the Rs, Lh or kT adaptation are applied for the data set changeover (refer to r1782, r1787, r1797).

p0827[0...n] Motor changeover status word bit number / Mot_chg ZSW bitNo.

VECTOR_G

Can be changed: C2(3)	**Calculated:** -	**Access level:** 2
Data type: Unsigned16	**Dynamic index:** MDS, p0130	**Func. diagram:** 8575
P-Group: Motor	**Units group:** -	**Unit selection:** -
Not for motor type: -	**Scaling:** -	**Expert list:** 1
Min	**Max**	**Factory setting**
0	15	0

Description: Sets the bit number for every motor data set.

Example:

p0827[0] = 0: For MDS0, r0830.0 is switched.

p0827[1] = 5: For MDS1, r0830.5 is switched.

Dependency: Refer to: p0826, r0830

Note: A motor is only changed over (a new motor selected) after the pulses have been suppressed.

When the motor data sets are changed over, the following applies:

Bit numbers that are not identical, signify that the motor must be changed over.

p0828[0...n] BI: Motor changeover, feedback signal / Mot_chng fdbk sig

VECTOR_G

Can be changed: C2(3), T	**Calculated:** -	**Access level:** 3
Data type: Unsigned32 / Binary	**Dynamic index:** CDS, p0170	**Func. diagram:** 8575
P-Group: Motor	**Units group:** -	**Unit selection:** -
Not for motor type: -	**Scaling:** -	**Expert list:** 1
Min	**Max**	**Factory setting**
-	-	0

Description: Sets the signal source for the feedback signal when changing over the motor.

For p0833.0 = 1 the following applies:

This feedback signal (0/1 edge) is required after a motor changeover to enable the pulses.

Dependency: Refer to: p0833

Notice: The parameter may be protected as a result of p0922 or p2079 and cannot be changed.

© Siemens AG 2012 All Rights Reserved

r0830.0...15 CO/BO: Motor changeover, status word / Mot_chngov ZSW

VECTOR_G

Can be changed: -	**Calculated:** -	**Access level:** 2
Data type: Unsigned16	**Dynamic index:** -	**Func. diagram:** 8575
P-Group: Displays, signals	**Units group:** -	**Unit selection:** -
Not for motor type: -	**Scaling:** -	**Expert list:** 1
Min	**Max**	**Factory setting**
-	-	-

Description:

Displays the status word of the motor changeover.

These signals can be connected to digital outputs to change over the motor.

Bit field:

Bit	Signal name	1 signal	0 signal	FP
00	Motor selection, bit 0	High	Low	-
01	Motor selection, bit 1	High	Low	-
02	Motor selection, bit 2	High	Low	-
03	Motor selection, bit 3	High	Low	-
04	Motor selection, bit 4	High	Low	-
05	Motor selection, bit 5	High	Low	-
06	Motor selection, bit 6	High	Low	-
07	Motor selection, bit 7	High	Low	-
08	Motor selection, bit 8	High	Low	-
09	Motor selection, bit 9	High	Low	-
10	Motor selection, bit 10	High	Low	-
11	Motor selection, bit 11	High	Low	-
12	Motor selection, bit 12	High	Low	-
13	Motor selection, bit 13	High	Low	-
14	Motor selection, bit 14	High	Low	-
15	Motor selection, bit 15	High	Low	-

Dependency:

Refer to: p0827

p0831[0...15] BI: Motor changeover, contactor feedback / Mot_chg cont fdbk

VECTOR_G

Can be changed: U, T	**Calculated:** -	**Access level:** 3
Data type: Unsigned32 / Binary	**Dynamic index:** -	**Func. diagram:** 8575
P-Group: Motor	**Units group:** -	**Unit selection:** -
Not for motor type: -	**Scaling:** -	**Expert list:** 1
Min	**Max**	**Factory setting**
-	-	0

Description:

Sets the signal source for the feedback signal of the contactors when changing over motors.

There is a fixed inter-relationship between energizing the contactor and the feedback signal.

Example:

A changeover is to be made between MDS0 (motor 0) and MDS1 (motor 1). The contactors should be switched using bit 4 (contactor 0) and 5 (contactor 1). The changeover should be made with an interconnection of the feedback signal.

Implementation:

MDS0: p0827[0] = 4, interconnect output to switch contactor 0 to r0830.4, p0831[4] = "input, feedback signal, contactor 0"

MDS1: p0827[1] = 5, interconnect output to switch contactor 1 to r0830.5, p0831[5] = "input, feedback signal, contactor 1"

The following sequence applies when changing over from MDS0 to MDS1:

1. The status bit r0830.4 is deleted. When the feedback signal (p0831[4]) is connected, the system waits until the feedback signal "contactor open" is displayed. If the feedback signal is not connected, then the system waits for the switch-off interlocking time of 320 ms.

2. The status bit r0830.5 is set. If the feedback signal (p0831[5]) is connected, the system waits until the feedback signal "contactor closed" is displayed. If the feedback signal is not connected, then the system waits for the switch-on interlocking time of 160 ms.

© Siemens AG 2012 All Rights Reserved

Index:
[0] = Feedback signal contactor 0
[1] = Feedback signal contactor 1
[2] = Feedback signal contactor 2
[3] = Feedback signal contactor 3
[4] = Feedback signal contactor 4
[5] = Feedback signal contactor 5
[6] = Feedback signal contactor 6
[7] = Feedback signal contactor 7
[8] = Feedback signal contactor 8
[9] = Feedback signal contactor 9
[10] = Feedback signal contactor 10
[11] = Feedback signal contactor 11
[12] = Feedback signal contactor 12
[13] = Feedback signal contactor 13
[14] = Feedback signal contactor 14
[15] = Feedback signal contactor 15

r0832.0...15 CO/BO: Mot. changeover, contactor feedback sig. status word / Mot_chng fdbk ZSW

VECTOR_G

Can be changed: -	**Calculated:** -	**Access level:** 2
Data type: Unsigned32	**Dynamic index:** -	**Func. diagram:** 8575
P-Group: Displays, signals	**Units group:** -	**Unit selection:** -
Not for motor type: -	**Scaling:** -	**Expert list:** 1
Min	**Max**	**Factory setting**
-	-	-

Description: Displays the status word of the contactor feedback signals when changing over a motor.

Bit field:

Bit	Signal name	1 signal	0 signal	FP
00	Feedback signal contactor 0	Closed	Opened	-
01	Feedback signal contactor 1	Closed	Opened	-
02	Feedback signal contactor 2	Closed	Opened	-
03	Feedback signal contactor 3	Closed	Opened	-
04	Feedback signal contactor 4	Closed	Opened	-
05	Feedback signal contactor 5	Closed	Opened	-
06	Feedback signal contactor 6	Closed	Opened	-
07	Feedback signal contactor 7	Closed	Opened	-
08	Feedback signal contactor 8	Closed	Opened	-
09	Feedback signal contactor 9	Closed	Opened	-
10	Feedback signal contactor 10	Closed	Opened	-
11	Feedback signal contactor 11	Closed	Opened	-
12	Feedback signal contactor 12	Closed	Opened	-
13	Feedback signal contactor 13	Closed	Opened	-
14	Feedback signal contactor 14	Closed	Opened	-
15	Feedback signal contactor 15	Closed	Opened	-

Dependency: Refer to: p0831

p0833 Data set changeover configuration / DS_chng config

VECTOR_G

Can be changed: C2(15)	**Calculated:** -	**Access level:** 2
Data type: Unsigned16	**Dynamic index:** -	**Func. diagram:** 8575
P-Group: Data sets	**Units group:** -	**Unit selection:** -
Not for motor type: -	**Scaling:** -	**Expert list:** 1
Min	**Max**	**Factory setting**
-	-	0010 bin

Description: Sets the configuration for the motor and encoder changeover.

Bit field:

Bit	Signal name	1 signal	0 signal	FP
00	Contactor changeover from the application/drive	application	Drive	-
01	Pulse suppression by application/drive	application	Drive	-
02	Suppress drive parking for EDS changeover	Yes	No	-

© Siemens AG 2012 All Rights Reserved

Note: Re bit 00:

When the bit is set and the motor has to be changed over, then p0827 must be set differently in the appropriate motor data sets.

Re bit 02:

The bit defines whether, for an EDS changeover, the status signal Gn_ZSW.14 is suppressed (parking encoder active).

Re motor changeover to running motor:

The "flying restart" function should also be activated (p1200) when changing over to a motor that is already running.

r0835.2 CO/BO: Data set changeover status word / DDS_ZSW

ENC

Can be changed: -	**Calculated:** -	**Access level:** 2
Data type: Unsigned16	**Dynamic index:** -	**Func. diagram:** 8575
P-Group: Displays, signals	**Units group:** -	**Unit selection:** -
Not for motor type: -	**Scaling:** -	**Expert list:** 1
Min	**Max**	**Factory setting**
-	-	-

Description: Displays the status word for the drive data set changeover.

Bit field:

Bit	Signal name	1 signal	0 signal	FP
02	Internal parameter calculation active	Yes	No	-

Note: Re bit 02:

A data set changeover is delayed by the time required for the internal parameter calculation.

r0835.0...11 CO/BO: Data set changeover status word / DDS_ZSW

VECTOR_G

Can be changed: -	**Calculated:** -	**Access level:** 2
Data type: Unsigned16	**Dynamic index:** -	**Func. diagram:** 8575
P-Group: Displays, signals	**Units group:** -	**Unit selection:** -
Not for motor type: -	**Scaling:** -	**Expert list:** 1
Min	**Max**	**Factory setting**
-	-	-

Description: Displays the status word for the drive data set changeover.

Bit field:

Bit	Signal name	1 signal	0 signal	FP
00	Motor changeover active	Yes	No	8575
01	Encoder changeover active	Yes	No	-
02	Internal parameter calculation active	Yes	No	-
04	Armature short circuit active	Yes	No	-
05	Identification running	Yes	No	-
06	Friction characteristic record running	Yes	No	-
07	Rotating measurement running	Yes	No	-
08	Motor data identification running	Yes	No	-
10	Wait for pulse suppression	Yes	No	-
11	Wait for motor changeover feedback signal	Yes	No	-

Note: This parameter is only supplied with up-to-date values if data set changeover has been selected or is running.

Re bit 00:

The signal is only influenced when a motor changeover is set via p0827 (unequal bit numbers).

Re bit 01:

The signal is only influenced when an encoder changeover is set via p0187, p0188, or p0189.

Re bit 02:

A data set changeover is delayed by the time required for the internal parameter calculation.

Re bit 04:

A data set changeover is only carried out when the armature short circuit is not activated.

Re bit 05:

The following applies for SERVO:

A data set changeover is only carried out when pole position identification, encoder adjustment, motor data identification, and rotating measurement are not running.

© Siemens AG 2012 All Rights Reserved

The following applies for VECTOR:
A data set changeover is only carried out when pole position identification is not running.
Re bit 06:
A data set changeover is only carried out when the friction characteristic record is not running.
Re bit 07 (VECTOR only):
A data set changeover is only carried out when rotating measurement is not running.
Re bit 08 (VECTOR only):
A data set changeover is only carried out when motor data identification is not running.
Re bit 10:
A motor changeover is set with p0833.1 = 1. It can only be carried out when the application performs pulse suppression.
Re bit 11:
A motor changeover is set with p0833.0 = 1. The pulses are only enabled when the "Motor changeover feedback" signal is detected.

r0836.0...3 CO/BO: Command Data Set CDS selected / CDS selected

B_INF, VECTOR_G

Can be changed: -	**Calculated:** -	**Access level:** 2
Data type: Unsigned8	**Dynamic index:** -	**Func. diagram:** 1530, 8560
P-Group: Displays, signals	**Units group:** -	**Unit selection:** -
Not for motor type: -	**Scaling:** -	**Expert list:** 1
Min	**Max**	**Factory setting**
-	-	-

Description: Displays the command data set (CDS) selected via the binector input.

Bit field:

Bit	Signal name	1 signal	0 signal	FP
00	CDS select. bit 0	ON	OFF	-
01	CDS select. bit 1	ON	OFF	-
02	CDS select. bit 2	ON	OFF	-
03	CDS select. bit 3	ON	OFF	-

Dependency: Refer to: r0050, p0810, p0811

Note: Command data sets are selected via binector input p0810 and following.
The currently effective command data set is displayed in r0050.

r0837.0...4 CO/BO: Drive Data Set DDS selected / DDS selected

ENC, VECTOR_G

Can be changed: -	**Calculated:** -	**Access level:** 2
Data type: Unsigned8	**Dynamic index:** -	**Func. diagram:** 8565
P-Group: Displays, signals	**Units group:** -	**Unit selection:** -
Not for motor type: -	**Scaling:** -	**Expert list:** 1
Min	**Max**	**Factory setting**
-	-	-

Description: Displays the drive data set (DDS) selected via the binector input.

Bit field:

Bit	Signal name	1 signal	0 signal	FP
00	DDS select. bit 0	ON	OFF	-
01	DDS select. bit 1	ON	OFF	-
02	DDS select. bit 2	ON	OFF	-
03	DDS select. bit 3	ON	OFF	-
04	DDS select. bit 4	ON	OFF	-

Dependency: Refer to: r0051, p0820, p0821, p0822, p0823, p0824

Note: Drive data sets are selected via binector input p0820 and following.
The currently effective drive data set is displayed in r0051.
If there is only one data set, then a value of 0 is displayed in this parameter and not the selection via binector inputs.

© Siemens AG 2012 All Rights Reserved

r0838[0...3] Motor/Encoder Data Set selected / MDS/EDS selected

VECTOR_G	**Can be changed:** -	**Calculated:** -	**Access level:** 2
	Data type: Unsigned8	**Dynamic index:** -	**Func. diagram:** 8565
	P-Group: Displays, signals	**Units group:** -	**Unit selection:** -
	Not for motor type: -	**Scaling:** -	**Expert list:** 1
	Min	**Max**	**Factory setting**
	-	-	-

Description: Displays the selected Motor Data Set (MDS) and the selected Encoder Data Sets (EDS).

Index:
[0] = Motor Data Set MDS selected
[1] = Encoder 1 Encoder Data Set EDS selected
[2] = Encoder 2 Encoder Data Set EDS selected
[3] = Encoder 3 Encoder Data Set EDS selected

Dependency: Refer to: r0049, p0186, p0187, p0188, p0189

Note: Value 99 means the following: No encoder assigned (not configured).

p0839 Motor changeover contactor control delay time / Mot_chg ctrl t_del

VECTOR_G	**Can be changed:** C2(3)	**Calculated:** -	**Access level:** 2
	Data type: Unsigned16	**Dynamic index:** -	**Func. diagram:** -
	P-Group: Motor	**Units group:** -	**Unit selection:** -
	Not for motor type: -	**Scaling:** -	**Expert list:** 1
	Min	**Max**	**Factory setting**
	0 [ms]	500 [ms]	0 [ms]

Description: Sets the delay time for the contactor control for the motor changeover.

Note: The delay time is taken into account in the following cases:
- for feedback signal, previous contactor "Open". The new motor contactor is controlled (energized) after the delay time has expired.
- for the feedback signal, new motor contactor "Closed". The pulses are enabled after the delay time has expired.

p0840[0...n] BI: ON / OFF (OFF1) / ON / OFF (OFF1)

B_INF, VECTOR_G	**Can be changed:** T	**Calculated:** -	**Access level:** 3
	Data type: Unsigned32 / Binary	**Dynamic index:** CDS, p0170	**Func. diagram:** 2501, 2610, 8720, 8820, 8920
	P-Group: Commands	**Units group:** -	**Unit selection:** -
	Not for motor type: -	**Scaling:** -	**Expert list:** 1
	Min	**Max**	**Factory setting**
	-	-	0

Description: Sets the signal source for the command "ON/OFF (OFF1)".
For the PROFIdrive profile, this command corresponds to control word 1 bit 0 (STW1.0).

Recommend.: When the setting for this binector input is changed, the motor can only be switched on by means of an appropriate signal change of the source.

Dependency: Refer to: p1055, p1056

Caution: When "master control from PC" is activated, this binector input is ineffective.

Notice: For binector input p0840 = 0 signal, the motor can be moved, jogging using binector input p1055 or p1056.
The command "ON/OFF (OFF1)" can be issued using binector input p0840 or p1055/p1056.
For binector input p0840 = 0 signal, the switch-on inhibit is acknowledged.
Only the signal source that originally powered up can also power down again.
The parameter may be protected as a result of p0922 or p2079 and cannot be changed.

Note: For drives with closed-loop speed control (p1300 = 20, 21), the following applies:
- BI: p0840 = 0 signal: OFF1 (braking with the ramp-function generator, then pulse suppression)

© Siemens AG 2012 All Rights Reserved

For drives with closed-loop torque control (p1300 = 22, 23), the following applies:
- BI: p0840 = 0 signal: immediate pulse suppression
For drives with closed-loop torque control (activated using p1501), the following applies:
- BI: p0840 = 0 signal: No dedicated braking response, but pulse cancelation when standstill is detected (p1226, p1227)
For drives with closed-loop speed/torque control, the following applies:
- BI: p0840 = 0/1 signal: ON (pulses can be enabled)
For active infeeds (Active Line Module and Smart Line Module) the following applies:
- BI: p0840 = 0 signal: OFF1 (reduce Vdc along the ramp, then pulse suppression and pre-charging contactor/line contactor open)
- BI: p0840 = 0/1 signal: ON (pre-charging contactor/line contactor close, pulses can be enabled)
For passive infeeds (Basic Line Module) the following applies:
- BI: p0840 = 0 signal: OFF1 (pre-charging contactor/line contactor open)
- BI: p0840 = 0/1 signal: ON (pre-charging contactor/line contactor close)
r0863.1 of a drive can also be selected as signal source.

p0844[0...n] BI: No coast-down / coast-down (OFF2) signal source 1 / OFF2 S_src 1

B_INF, VECTOR_G

Can be changed: T	**Calculated:** -	**Access level:** 3
Data type: Unsigned32 / Binary	**Dynamic index:** CDS, p0170	**Func. diagram:** 2501, 8720, 8820, 8920
P-Group: Commands	**Units group:** -	**Unit selection:** -
Not for motor type: -	**Scaling:** -	**Expert list:** 1
Min	**Max**	**Factory setting**
-	-	1

Description: Sets the first signal source for the command "No coast down/coast down (OFF2)".
The following signals are AND'ed:
- BI: p0844 "No coast-down / coast-down (OFF2) signal source 1"
- BI: p0845 "No coast-down / coast-down (OFF2) signal source 2"
For the PROFIdrive profile, the result of the AND logic operation corresponds to control word 1 bit 1 (STW1.1).
BI: p0844 = 0 signal or BI: p0845 = 0 signal
- OFF2 (immediate pulse suppression and switch on inhibit)
BI: p0844 = 1 signal and BI: p0845 = 1 signal
- No OFF2 (enable is possible)

Caution: When "master control from PC" is activated, this binector input is ineffective.

Notice: The parameter may be protected as a result of p0922 or p2079 and cannot be changed.

Note: For Active Line Modules, Smart Line Modules and binector input p0844 = 0 signal or p0845 = 0 signal, the following applies:
- pre-charging contactor/line contactor is additionally opened.

p0845[0...n] BI: No coast-down / coast-down (OFF2) signal source 2 / OFF2 S_src 2

B_INF, VECTOR_G

Can be changed: T	**Calculated:** -	**Access level:** 3
Data type: Unsigned32 / Binary	**Dynamic index:** CDS, p0170	**Func. diagram:** 2501, 8720, 8820, 8920
P-Group: Commands	**Units group:** -	**Unit selection:** -
Not for motor type: -	**Scaling:** -	**Expert list:** 1
Min	**Max**	**Factory setting**
-	-	1

Description: Sets the second signal source for the command "No coast down/coast down (OFF2)".
The following signals are AND'ed:
- BI: p0844 "No coast-down / coast-down (OFF2) signal source 1"
- BI: p0845 "No coast-down / coast-down (OFF2) signal source 2"

© Siemens AG 2012 All Rights Reserved

For the PROFIdrive profile, the result of the AND logic operation corresponds to control word 1 bit 1 (STW1.1).
BI: p0844 = 0 signal or BI: p0845 = 0 signal
- OFF2 (immediate pulse suppression and switch on inhibit)
BI: p0844 = 1 signal and BI: p0845 = 1 signal
- No OFF2 (enable is possible)

Caution: When "master control from PC" is activated, this binector input is effective.

Note: For Active Line Modules, Smart Line Modules and binector input p0844 = 0 signal or p0845 = 0 signal, the following applies:
- pre-charging contactor/line contactor is additionally opened.

p0848[0...n] BI: No Quick Stop / Quick Stop (OFF3) signal source 1 / OFF3 S_src 1

VECTOR_G

Can be changed: T	**Calculated:** -	**Access level:** 3
Data type: Unsigned32 / Binary	**Dynamic index:** CDS, p0170	**Func. diagram:** 2501
P-Group: Commands	**Units group:** -	**Unit selection:** -
Not for motor type: -	**Scaling:** -	**Expert list:** 1
Min	**Max**	**Factory setting**
-	-	1

Description: Sets the first signal source for the command "No quick stop/quick stop (OFF3)".
The following signals are AND'ed:
- BI: p0848 "No quick stop / quick stop (OFF3) signal source 1"
- BI: p0849 "No quick stop / quick stop (OFF3) signal source 2"
For the PROFIdrive profile, the result of the AND logic operation corresponds to control word 1 bit 2 (STW1.2).
BI: p0848 = 0 signal or BI: p0849 = 0 signal
- OFF3 (braking along the OFF3 ramp (p1135), then pulse suppression and switch on inhibit)
BI: p0848 = 1 signal and BI: p0849 = 1 signal
- No OFF3 (enable is possible)

Caution: When "master control from PC" is activated, this binector input is ineffective.

Notice: The parameter may be protected as a result of p0922 or p2079 and cannot be changed.

p0849[0...n] BI: No Quick Stop / Quick Stop (OFF3) signal source 2 / OFF3 S_src 2

VECTOR_G

Can be changed: T	**Calculated:** -	**Access level:** 3
Data type: Unsigned32 / Binary	**Dynamic index:** CDS, p0170	**Func. diagram:** 2501
P-Group: Commands	**Units group:** -	**Unit selection:** -
Not for motor type: -	**Scaling:** -	**Expert list:** 1
Min	**Max**	**Factory setting**
-	-	1

Description: Sets the second signal source for the command "No quick stop/quick stop (OFF3)".
The following signals are AND'ed:
- BI: p0848 "No quick stop / quick stop (OFF3) signal source 1"
- BI: p0849 "No quick stop / quick stop (OFF3) signal source 2"
For the PROFIdrive profile, the result of the AND logic operation corresponds to control word 1 bit 2 (STW1.2).
BI: p0848 = 0 signal or BI: p0849 = 0 signal
- OFF3 (braking along the OFF3 ramp (p1135), then pulse suppression and switch on inhibit)
BI: p0848 = 1 signal and BI: p0849 = 1 signal
- No OFF3 (enable is possible)

Caution: When "master control from PC" is activated, this binector input is effective.

© Siemens AG 2012 All Rights Reserved

p0852[0...n] BI: Enable operation/inhibit operation / Operation enable

VECTOR_G

Can be changed: T	**Calculated:** -	**Access level:** 3
Data type: Unsigned32 / Binary	**Dynamic index:** CDS, p0170	**Func. diagram:** 2501, 8820, 8920
P-Group: Commands	**Units group:** -	**Unit selection:** -
Not for motor type: -	**Scaling:** -	**Expert list:** 1
Min	**Max**	**Factory setting**
-	-	1

Description: Sets the signal source for the command "enable operation/inhibit operation".
For the PROFIdrive profile, this command corresponds to control word 1 bit 3 (STW1.3).
BI: p0852 = 0 signal
Inhibit operation (suppress pulses).
BI: p0852 = 1 signal
Enable operation (pulses can be enabled).

Caution: When "master control from PC" is activated, this binector input is ineffective.

Notice: The parameter may be protected as a result of p0922 or p2079 and cannot be changed.

p0854[0...n] BI: Control by PLC/no control by PLC / Master ctrl by PLC

B_INF, VECTOR_G

Can be changed: T	**Calculated:** -	**Access level:** 3
Data type: Unsigned32 / Binary	**Dynamic index:** CDS, p0170	**Func. diagram:** 2501, 8720, 8820, 8920
P-Group: Commands	**Units group:** -	**Unit selection:** -
Not for motor type: -	**Scaling:** -	**Expert list:** 1
Min	**Max**	**Factory setting**
-	-	1

Description: Sets the signal source for the command "control by PLC/no control by PLC".
For the PROFIdrive profile, this command corresponds to control word 1 bit 10 (STW1.10).
BI: p0854 = 0 signal
No control by PLC
BI: p0852 = 1 signal
Master ctrl by PLC.

Caution: When "master control from PC" is activated, this binector input is ineffective.

Notice: The parameter may be protected as a result of p0922 or p2079 and cannot be changed.

Note: This bit is used to initiate a response for the drives when the control fails (F07220). If there is no control available, then binector input p0854 should be set to 1.
If a control is available, then STW1.10 must be set to 1 (PZD1) so that the received data is updated. This applies regardless of the setting in p0854 and even in the case of free telegram configuration (p0922 = 999).

p0854 BI: Control by PLC/no control by PLC / Master ctrl by PLC

ENC

Can be changed: T	**Calculated:** -	**Access level:** 3
Data type: Unsigned32 / Binary	**Dynamic index:** -	**Func. diagram:** 2501, 8720, 8820, 8920
P-Group: Commands	**Units group:** -	**Unit selection:** -
Not for motor type: -	**Scaling:** -	**Expert list:** 1
Min	**Max**	**Factory setting**
-	-	1

Description: Sets the signal source for the command "control by PLC/no control by PLC".
For the PROFIdrive profile, this command corresponds to control word 1 bit 10 (STW1.10).

© Siemens AG 2012 All Rights Reserved

BI: p0854 = 0 signal
No control by PLC
BI: p0852 = 1 signal
Master ctrl by PLC.

Caution: When "master control from PC" is activated, this binector input is ineffective.

Notice: The parameter may be protected as a result of p0922 or p2079 and cannot be changed.

Note: This bit is used to initiate a response for the drives when the control fails (F07220). If there is no control available, then binector input p0854 should be set to 1.

If a control is available, then STW1.10 must be set to 1 (PZD1) so that the received data is updated. This applies regardless of the setting in p0854 and even in the case of free telegram configuration (p0922 = 999).

p0855[0...n] BI: Unconditionally release holding brake / Uncond open brake

VECTOR_G

Can be changed: T	**Calculated:** -	**Access level:** 3
Data type: Unsigned32 / Binary	**Dynamic index:** CDS, p0170	**Func. diagram:** 2501, 2701, 2707
P-Group: Commands	**Units group:** -	**Unit selection:** -
Not for motor type: -	**Scaling:** -	**Expert list:** 1
Min	**Max**	**Factory setting**
-	-	0

Description: Sets the signal source for the command "unconditionally open holding brake".

Dependency: Refer to: p0858

Notice: The parameter may be protected as a result of p0922 or p2079 and cannot be changed.

Note: The signal via BI: p0858 (unconditionally close holding brake) has a higher priority than via BI: p0855 (unconditionally open holding brake).

p0856[0...n] BI: Speed controller enable / n_ctrl enable

VECTOR_G

Can be changed: T	**Calculated:** -	**Access level:** 3
Data type: Unsigned32 / Binary	**Dynamic index:** CDS, p0170	**Func. diagram:** 2501, 2701, 2707
P-Group: Commands	**Units group:** -	**Unit selection:** -
Not for motor type: -	**Scaling:** -	**Expert list:** 1
Min	**Max**	**Factory setting**
-	-	1

Description: Sets the signal source for the command "enable speed controller" (r0898.12).
0 signal: Set the I component and speed controller output to zero.
1 signal: Enable speed controller.

Dependency: Refer to: r0898

Note: If "enable speed controller" is withdrawn, then an existing brake will be closed.
If "speed controller enable" is withdrawn, the pulses are not suppressed.

p0857 Power unit monitoring time / PU t_monit

B_INF, VECTOR_G

Can be changed: T	**Calculated:** -	**Access level:** 2
Data type: FloatingPoint32	**Dynamic index:** -	**Func. diagram:** 8760, 8864, 8964
P-Group: Commands	**Units group:** -	**Unit selection:** -
Not for motor type: -	**Scaling:** -	**Expert list:** 1
Min	**Max**	**Factory setting**
100.0 [ms]	60000.0 [ms]	6000.0 [ms]

Description: Sets the monitoring time for the power unit.

© Siemens AG 2012 All Rights Reserved

The following applies for infeeds and drives:

The monitoring time is started after an 0/1 edge of the ON/OFF1 command. If the power unit does not return a READY signal within the monitoring time, then fault F06000 (infeeds) or F07802 (drives) is output.

For drives, the following also applies:

After the pulse enable (operation enabled, p0852), the monitoring time is re-started. If the infeed does not signal ready to the drive within the monitoring time (using BI: p0864 of the drive), fault F07840 is initiated.

Dependency: Refer to: F06000, F07802, F07840, F30027

Notice: The maximum time to pre-charge the DC link is monitored in the power unit and cannot be changed. The maximum duration of the pre-charging depends on the power class and the power unit design.

The monitoring time for the pre-charging is started after the ON command (BI: p0840 = 0/1 signal). Fault F30027 is output when the maximum pre-charging duration is exceeded.

Note: The factory setting for p0857 depends on the power class and the design of the power unit.

The monitoring time for the ready signal of the power unit includes the time to pre-charge the DC link and, if relevant, the de-bounce time of the contactors.

If an excessively low value is entered into p0857, then after enable, this results in the corresponding fault.

p0858[0...n] BI: Unconditionally close holding brake / Uncond close brake

VECTOR_G

Can be changed: T	**Calculated:** -	**Access level:** 2
Data type: Unsigned32 / Binary	**Dynamic index:** CDS, p0170	**Func. diagram:** 2501, 2701, 2707
P-Group: Commands	**Units group:** -	**Unit selection:** -
Not for motor type: -	**Scaling:** -	**Expert list:** 1
Min	**Max**	**Factory setting**
-	-	0

Description: Sets the signal source for the command "unconditionally close holding brake".

Dependency: Refer to: p0855

Note: The signal via BI: p0858 (unconditionally close holding brake) has a higher priority than via BI: p0855 (unconditionally open holding brake).

For a 1 signal via BI: p0858, the command "unconditionally close the holding brake" is executed and internally a zero setpoint is entered.

p0860 BI: Line cont. fdbk sig / Line contact feedb

B_INF, VECTOR_G

Can be changed: T	**Calculated:** -	**Access level:** 3
Data type: Unsigned32 / Binary	**Dynamic index:** -	**Func. diagram:** 2634, 8734, 8834, 8934
P-Group: Commands	**Units group:** -	**Unit selection:** -
Not for motor type: -	**Scaling:** -	**Expert list:** 1
Min	**Max**	**Factory setting**
-	-	863.1

Description: Sets the signal source for the feedback signal from the line contactor.

Recommend.: When the monitoring is activated (BI: p0860 not equal to r0863.1), then to control the line contactor, signal BO: r0863.1 of its own drive object should be used.

Dependency: Refer to: p0861, r0863

Refer to: F07300

Notice: The line contactor monitoring is de-activated if the control signal of the particular drive object is set as the signal source for the feedback signal of the line contactor (BI: p0860 = r0863.1).

Note: The state of the line contactor is monitored depending on signal BO: r0863.1.

When the monitoring is activated (BI: p0860 not equal to r0863.1), fault F07300 is then also output if the contactor is closed before it is controlled using r0863.1.

© Siemens AG 2012 All Rights Reserved

p0861 Line contactor monitoring time / LineContact t_mon

B_INF, VECTOR_G

Can be changed: T	**Calculated:** -	**Access level:** 2
Data type: FloatingPoint32	**Dynamic index:** -	**Func. diagram:** 2634, 8734, 8834, 8934
P-Group: Commands	**Units group:** -	**Unit selection:** -
Not for motor type: -	**Scaling:** -	**Expert list:** 1
Min	**Max**	**Factory setting**
0 [ms]	5000 [ms]	100 [ms]

Description: Sets the monitoring time of the line contactor.

This time starts each time that the line contactor switches (r0863.1). If a feedback signal is not received from the line contactor within the time, a message is output.

Dependency: Refer to: p0860, r0863

Refer to: F07300

Note: The monitoring function is disabled for the factory setting of p0860.

p0862 Power unit ON delay / PU t_on

B_INF, VECTOR_G

Can be changed: T	**Calculated:** -	**Access level:** 3
Data type: FloatingPoint32	**Dynamic index:** -	**Func. diagram:** 2610, 8732, 8832, 8932
P-Group: Commands	**Units group:** -	**Unit selection:** -
Not for motor type: -	**Scaling:** -	**Expert list:** 1
Min	**Max**	**Factory setting**
0 [ms]	65000 [ms]	0 [ms]

Description: Sets the delay time for the control command of the power unit and a line contactor, if used.

Note: This means that it is possible to realize a shifted (delayed) pre-charging or power-on using a single ON command.

When the infeed units are active, before the line contactor is closed, an offset adjustment of the current measurement is carried out for a duration of 120 ms (p3491).

r0863.0...2 CO/BO: Drive coupling status word/control word / CoupleZSW/STW

B_INF, VECTOR_G

Can be changed: -	**Calculated:** -	**Access level:** 2
Data type: Unsigned16	**Dynamic index:** -	**Func. diagram:** -
P-Group: Commands	**Units group:** -	**Unit selection:** -
Not for motor type: -	**Scaling:** -	**Expert list:** 1
Min	**Max**	**Factory setting**
-	-	-

Description: Displays the status and control words of the drive coupling.

Bit field:

Bit	Signal name	1 signal	0 signal	FP
00	Closed-loop control operation	Yes	No	2610, 6495, 8732, 8832, 8932, 9794
01	Energize contactor	Yes	No	2610, 2634, 8732, 8734, 8832, 8834, 8932, 8934
02	Infeed line supply failure	Yes	No	-

Dependency: Refer to: p0864

© Siemens AG 2012 All Rights Reserved

Note: Re bit 00:
Bit 0 signals that the infeed is ready.
When the operating signal is transferred via BO: r0863.0 this allows several drives to start (run-up) staggered over time when they are simultaneously powered up.
To realize this, the following connections/interconnections are required:
Drive 1: Interconnect BI: p0864 with BO: r0863.0 of the infeed
Drive 2: Interconnect BI: p0864 with BO: r0863.0 of drive 1
Drive 3: Interconnect BI: p0864 with BO: r0863.0 of drive 2, etc.
The first drive only transfers the operating signal to the next drive after it has reached its ready condition.
Re bit 01:
Bit 1 is used to control an external line contactor.
Re bit 02:
This bit only signals line supply failure for Active Infeed (A_INF) and Smart Infeed (S_INF).

p0864 BI: Infeed operation / INF operation

VECTOR_G

Can be changed: T	**Calculated:** -	**Access level:** 2
Data type: Unsigned32 / Binary	**Dynamic index:** -	**Func. diagram:** 1773, 1774, 2610
P-Group: Commands	**Units group:** -	**Unit selection:** -
Not for motor type: -	**Scaling:** -	**Expert list:** 1
Min	**Max**	**Factory setting**
-	-	0

Description: Sets the signal source for the operating signal of the infeed (e.g. BO: r0863.0).
Dependency: Refer to: r0863
Note: The sequence control of a servo/vector drive requires this signal.
The following applies for an infeed without DRIVE-CLiQ:
For these infeeds, the "ready" message is available via an output terminal. This signal must be connected to a digital input. The drives supplied from this infeed must use this signal as ready signal (BI: p0864 = digital input).

p0868 Power unit DC switch debounce time / PU DC sw t_deboun

VECTOR_G

Can be changed: T	**Calculated:** -	**Access level:** 3
Data type: FloatingPoint32	**Dynamic index:** -	**Func. diagram:** -
P-Group: Commands	**Units group:** -	**Unit selection:** -
Not for motor type: -	**Scaling:** -	**Expert list:** 1
Min	**Max**	**Factory setting**
0 [ms]	65000 [ms]	65000 [ms]

Description: Sets the debounce time for the DC circuit breaker for Motor Modules in "chassis" format.
Note: The following applies if p0868 = 65000 ms:
The debounce time defined internally in the power unit's EEPROM is implemented.

r0873 CO/BO: Infeed, total operation / INF total oper

B_INF

Can be changed: -	**Calculated:** -	**Access level:** 2
Data type: Unsigned16	**Dynamic index:** -	**Func. diagram:** 8732, 8832
P-Group: Commands	**Units group:** -	**Unit selection:** -
Not for motor type: -	**Scaling:** -	**Expert list:** 1
Min	**Max**	**Factory setting**
-	-	-

Description: Displays the operational readiness of the infeeds when using Smart Line Module (SLM) and Basic Line Module (BLM) together (mixed operation).
In order that signal BO: r0873 is available at one of the infeeds, then BI: p0874 of the one infeed must be interconnected to BO: r0863.0 of the other infeed.
Dependency: Refer to: r0863, p0874
Note: Mixed operation is not possible with the Active Line Module (ALM)!

© Siemens AG 2012 All Rights Reserved

p0874 BI: Smart/ Basic Line Module operation / SLM/BLM operation

B_INF

Can be changed: T	**Calculated:** -	**Access level:** 2
Data type: Unsigned32 / Binary	**Dynamic index:** -	**Func. diagram:** 8732, 8832
P-Group: Commands	**Units group:** -	**Unit selection:** -
Not for motor type: -	**Scaling:** -	**Expert list:** 1
Min	**Max**	**Factory setting**
-	-	0

Description: Setting to interconnect the ready signal for mixed operation of Smart Line Module (SLM) and Basic Line Module (BLM).

In order that signal BO: r0873 is available at one of the infeeds, then BI: p0874 of the one infeed must be interconnected to BO: r0863.0 of the other infeed.

Dependency: Refer to: r0863, r0873

Note: Mixed operation is not possible with the Active Line Module (ALM)!

p0894 Parking pre-setting / Parking pre-set

ENC, VECTOR_G

Can be changed: U, T	**Calculated:** -	**Access level:** 4
Data type: Unsigned32	**Dynamic index:** -	**Func. diagram:** -
P-Group: Displays, signals	**Units group:** -	**Unit selection:** -
Not for motor type: -	**Scaling:** -	**Expert list:** 1
Min	**Max**	**Factory setting**
-	-	0000 bin

Description: Pre-setting for the "Parking axis" and "Parking encoder" function.

Bit field:

Bit	Signal name	1 signal	0 signal	FP
00	Default with interconnection	Park	Do not park	-

Dependency: Refer to: p0480, p0897

Note: Re bit 00:

If there is at least one BICO interconnection for "Parking axis" or "Parking encoder", this default setting is taken into consideration during power-up.

p0895[0...n] BI: Activate/de-activate power unit components / PU_comp act/deact

B_INF, VECTOR_G

Can be changed: T	**Calculated:** -	**Access level:** 1
Data type: Unsigned32 / Binary	**Dynamic index:** PDS, p0120	**Func. diagram:** -
P-Group: Displays, signals	**Units group:** -	**Unit selection:** -
Not for motor type: -	**Scaling:** -	**Expert list:** 1
Min	**Max**	**Factory setting**
-	-	1

Description: Sets the signal source to activate/de-activate a power unit component.

Dependency: BI: p0895 = 0 signal

De-activating power unit components

BI: p0895 = 1 signal

Activating power unit components

Refer to: p0125, r0126

Refer to: A05054

Caution: It is not permissible to de-activate drive objects with safety functions enabled.

Notice: For Active Line Modules in the "Chassis" format, the Voltage Sensing Module (VSM, p0145) belonging to the power unit is automatically activated/deactivated.

Note: The power unit is only de-activated when the pulses are suppressed.

For units connected in parallel, when one of the power units is de-activated, then the enable in p7001 is withdrawn.

© Siemens AG 2012 All Rights Reserved

r0896.0 BO: Parking axis, status word / Parking axis, ZSW

VECTOR_G

Can be changed: -	**Calculated:** -	**Access level:** 2
Data type: Unsigned8	**Dynamic index:** -	**Func. diagram:** -
P-Group: Displays, signals	**Units group:** -	**Unit selection:** -
Not for motor type: -	**Scaling:** -	**Expert list:** 1
Min	**Max**	**Factory setting**
-	-	-

Description: Displays the status word for the "parking axis" function.

Bit field:

Bit	Signal name	1 signal	0 signal	FP
00	Parking axis active	Yes	No	-

Dependency: Refer to: p0897

p0897 BI: Parking axis selection / Parking axis sel

VECTOR_G

Can be changed: T	**Calculated:** -	**Access level:** 2
Data type: Unsigned32 / Binary	**Dynamic index:** -	**Func. diagram:** -
P-Group: Displays, signals	**Units group:** -	**Unit selection:** -
Not for motor type: -	**Scaling:** -	**Expert list:** 1
Min	**Max**	**Factory setting**
-	-	0

Description: Sets the signal source to select the "parking axis" function.

Dependency: BI: p0897 = 0 signal
The function "parking axis" is not selected.
BI: p0897 = 1 signal
The function "parking axis" is selected.
Refer to: r0896

Notice: The parameter may be protected as a result of p0922 or p2079 and cannot be changed.

Note: After it has been selected the "parking axis" function only becomes active when the pulses are suppressed.

r0898.0...10 CO/BO: Control word sequence control infeed / STW seq_ctrl INF

B_INF

Can be changed: -	**Calculated:** -	**Access level:** 2
Data type: Unsigned16	**Dynamic index:** -	**Func. diagram:** 8720
P-Group: Displays, signals	**Units group:** -	**Unit selection:** -
Not for motor type: -	**Scaling:** -	**Expert list:** 1
Min	**Max**	**Factory setting**
-	-	-

Description: Displays control word 1 of the infeed.

Bit field:

Bit	Signal name	1 signal	0 signal	FP
00	ON/OFF1	Yes	No	-
01	OC / OFF2	Yes	No	-
10	Master ctrl by PLC	Yes	No	-

Note: OC: Operating condition

r0898.0...15 CO/BO: Control word drive object 1 / STW DO1

CU_G130_DP, CU_G130_PN, CU_G150_DP, CU_G150_PN

Can be changed: -	**Calculated:** -	**Access level:** 2
Data type: Unsigned16	**Dynamic index:** -	**Func. diagram:** -
P-Group: Displays, signals	**Units group:** -	**Unit selection:** -
Not for motor type: -	**Scaling:** -	**Expert list:** 1
Min	**Max**	**Factory setting**
-	-	-

Description: Displays the control word of drive object 1 (Control Unit).

© Siemens AG 2012 All Rights Reserved

Bit field:

Bit	Signal name	1 signal	0 signal	FP
00	Synchronization signal SYN	Yes	No	-
01	Real time synchronization PING	Yes	No	-
07	Acknowledge fault	Yes	No	-
12	Master sign-of-life bit 0	Yes	No	-
13	Master sign-of-life bit 1	Yes	No	-
14	Master sign-of-life bit 2	Yes	No	-
15	Master sign-of-life bit 3	Yes	No	-

r0898.10 CO/BO: Control word sequence control encoder DO / STW seq_ctrl encDO

ENC

Can be changed: - **Calculated:** - **Access level:** 2
Data type: Unsigned16 **Dynamic index:** - **Func. diagram:** -
P-Group: Displays, signals **Units group:** - **Unit selection:** -
Not for motor type: - **Scaling:** - **Expert list:** 1

Min	Max	Factory setting
-	-	-

Description: Displays the control word for sequence control on the encoder drive object.

Bit field:

Bit	Signal name	1 signal	0 signal	FP
10	Master ctrl by PLC	Yes	No	-

r0898.0...14 CO/BO: Control word sequence control / STW seq_ctrl

VECTOR_G

Can be changed: - **Calculated:** - **Access level:** 2
Data type: Unsigned16 **Dynamic index:** - **Func. diagram:** 1530, 2501
P-Group: Displays, signals **Units group:** - **Unit selection:** -
Not for motor type: - **Scaling:** - **Expert list:** 1

Min	Max	Factory setting
-	-	-

Description: Displays the control word of the sequence control.

Bit field:

Bit	Signal name	1 signal	0 signal	FP
00	ON/OFF1	Yes	No	-
01	OC / OFF2	Yes	No	-
02	OC / OFF3	Yes	No	-
03	Operation enable	Yes	No	-
04	Ramp-function generator enable	Yes	No	-
05	Continue ramp-function generator	Yes	No	-
06	Speed setpoint enable	Yes	No	-
07	Command open brake	Yes	No	-
08	Jog 1	Yes	No	-
09	Jog 2	Yes	No	-
10	Master ctrl by PLC	Yes	No	-
12	Speed controller enable	Yes	No	-
14	Command close brake	Yes	No	-

Note: OC: Operating condition

r0899.0...12 CO/BO: Status word sequence control infeed / ZSW seq_ctrl INF

B_INF

Can be changed: - **Calculated:** - **Access level:** 2
Data type: Unsigned16 **Dynamic index:** - **Func. diagram:** 8726
P-Group: Displays, signals **Units group:** - **Unit selection:** -
Not for motor type: - **Scaling:** - **Expert list:** 1

Min	Max	Factory setting
-	-	-

Description: Displays the status word of the infeed sequence control.

Bit field:

Bit	Signal name	1 signal	0 signal	FP
00	Rdy for switch on	Yes	No	-
01	Ready	Yes	No	-
02	Operation enabled	Yes	No	-

© Siemens AG 2012 All Rights Reserved

04	No OFF2 active	OFF2 inactive	OFF2 active	-
06	Sw on inhibit	Yes	No	-
09	Control request	Yes	No	-
11	Pre-charging compl	Yes	No	-
12	Line contactor closed	Yes	No	-

Note: Re bits 00, 01, 02, 04, 06, 09:
For PROFIdrive, these signals are used for status word 1.

r0899.0...15 CO/BO: Status word drive object 1 / ZSW DO1

CU_G130_DP, CU_G130_PN, CU_G150_DP, CU_G150_PN

Can be changed: - **Calculated:** - **Access level:** 2
Data type: Unsigned16 **Dynamic index:** - **Func. diagram:** -
P-Group: Displays, signals **Units group:** - **Unit selection:** -
Not for motor type: - **Scaling:** - **Expert list:** 1

Min	Max	Factory setting
-	-	-

Description: Displays the status word from drive object 1 (Control Unit).

Bit field:

Bit	Signal name	1 signal	0 signal	FP
00	reserved	Yes	No	-
03	Fault present	Yes	No	-
07	Alarm present	Yes	No	-
08	System time synchronized	Yes	No	-
12	Slave sign-of-life bit 0	Yes	No	-
13	Slave sign-of-life bit 1	Yes	No	-
14	Slave sign-of-life bit 2	Yes	No	-
15	Slave sign-of-life bit 3	Yes	No	-

r0899.7...9 CO/BO: Status word sequence control encoder DO / ZSW seq_ctrl encDO

ENC

Can be changed: - **Calculated:** - **Access level:** 2
Data type: Unsigned16 **Dynamic index:** - **Func. diagram:** -
P-Group: Displays, signals **Units group:** - **Unit selection:** -
Not for motor type: - **Scaling:** - **Expert list:** 1

Min	Max	Factory setting
-	-	-

Description: Displays the status word for sequence control on the encoder drive object.

Bit field:

Bit	Signal name	1 signal	0 signal	FP
07	Drive ready	Yes	No	-
09	Control request	Yes	No	-

Note: For PROFIdrive, this signal is used for status word ZSW2_ENC.

r0899.0...15 CO/BO: Status word sequence control / ZSW seq_ctrl

VECTOR_G

Can be changed: - **Calculated:** - **Access level:** 2
Data type: Unsigned16 **Dynamic index:** - **Func. diagram:** 1530, 2503
P-Group: Displays, signals **Units group:** - **Unit selection:** -
Not for motor type: - **Scaling:** - **Expert list:** 1

Min	Max	Factory setting
-	-	-

Description: Displays the status word of the sequence control.

Bit field:

Bit	Signal name	1 signal	0 signal	FP
00	Rdy for switch on	Yes	No	-
01	Ready	Yes	No	-
02	Operation enabled	Yes	No	-
03	Jog active	Yes	No	-
04	No coasting active	OFF2 inactive	OFF2 active	-
05	No Quick Stop active	OFF3 inactive	OFF3 active	-
06	Switching on inhibited active	Yes	No	-

© Siemens AG 2012 All Rights Reserved

07	Drive ready	Yes	No	-
08	Controller enable	Yes	No	-
09	Control request	Yes	No	-
11	Pulses enabled	Yes	No	-
12	Open holding brake	Yes	No	-
13	Command close holding brake	Yes	No	-
14	Pulse enable from the brake control	Yes	No	-
15	Setpoint enable from the brake control	Yes	No	-

Note: Re bits 00, 01, 02, 04, 05, 06, 09:
For PROFIdrive, these signals are used for status word 1.
Re bit 13:
When the "Safe Brake Control" (SBC) is activated and selected, the brake is no longer controlled using this signal.
Re bit 14, 15:
These signals are only of significance when the "extended brake control" function module is activated (r0108.14 = 1).

p0918 PROFIBUS address / PB address

CU_G130_DP, CU_G150_DP

Can be changed: T	**Calculated:** -	**Access level:** 2
Data type: Unsigned16	**Dynamic index:** -	**Func. diagram:** 1520, 2410
P-Group: Communications	**Units group:** -	**Unit selection:** -
Not for motor type: -	**Scaling:** -	**Expert list:** 1
Min	**Max**	**Factory setting**
1	126	126

Description: Displays or sets the PROFIBUS address for PROFIBUS interface on the Control Unit.
The address can be set as follows:
1) Using the address switch on the Control Unit.
--> p0918 can then only be read and displays the selected address.
--> A change only becomes effective after a POWER ON.
2) Using p0918
--> Only if the address 00 hex, 7F hex, 80 hex, or FF hex has been set using the address switch.
--> The address is saved in a non-volatile fashion using the function "copy from RAM to ROM".
--> A change only becomes effective after a POWER ON.

Note: Permissible PROFIBUS addresses: 1 ... 126 (01 hex ... 7E hex)
Address 126 is used for commissioning.
Every PROFIBUS address change only becomes effective after a POWER ON.
The parameter is not influenced by setting the factory setting.

p0922 IF1 PROFIdrive telegram selection / IF1 PD Telegr_sel

B_INF

Can be changed: C2(1), T	**Calculated:** -	**Access level:** 1
Data type: Unsigned16	**Dynamic index:** -	**Func. diagram:** 1520, 2420, 2423, 2447, 2457, 2481, 2483
P-Group: Communications	**Units group:** -	**Unit selection:** -
Not for motor type: -	**Scaling:** -	**Expert list:** 1
Min	**Max**	**Factory setting**
370	999	999

Description: Sets the send and receive telegram.

Value:
370: SIEMENS telegram 370, PZD-1/1
371: SIEMENS telegram 371, PZD-5/8
999: Free telegram configuration with BICO

Dependency: Refer to: F01505, F01506

Note: If a value is not equal to 999, a telegram is set and the automatically set interconnections in the telegram are inhibited.
The inhibited interconnections can only be changed again after setting value 999.

© Siemens AG 2012 All Rights Reserved

p0922 IF1 PROFIdrive telegram selection / IF1 PD Telegr_sel

CU_G130_DP, CU_G130_PN, CU_G150_DP, CU_G150_PN

Can be changed: C2(1), T	**Calculated:** -	**Access level:** 1
Data type: Unsigned16	**Dynamic index:** -	**Func. diagram:** 1520, 2420, 2423, 2481, 2483
P-Group: Communications	**Units group:** -	**Unit selection:** -
Not for motor type: -	**Scaling:** -	**Expert list:** 1
Min 390	**Max** 999	**Factory setting** 999

Description: Sets the send and receive telegram.

Value:
390: SIEMENS telegram 390, PZD-2/2
391: SIEMENS telegram 391, PZD-3/7
392: SIEMENS telegram 392, PZD-3/15
393: SIEMENS telegram 393, PZD-4/21
394: SIEMENS telegram 394, PZD-3/3
395: SIEMENS telegram 395, PZD-4/25
999: Free telegram configuration with BICO

p0922 IF1 PROFIdrive telegram selection / IF1 PD Telegr_sel

ENC

Can be changed: C2(1), T	**Calculated:** -	**Access level:** 1
Data type: Unsigned16	**Dynamic index:** -	**Func. diagram:** 1520, 2415, 2416, 2419, 2420, 2421, 2422, 2423
P-Group: Communications	**Units group:** -	**Unit selection:** -
Not for motor type: -	**Scaling:** -	**Expert list:** 1
Min 81	**Max** 999	**Factory setting** 999

Description: Sets the send and receive telegram.

Value:
81: SIEMENS telegram 81, PZD-2/6
82: SIEMENS telegram 82, PZD-2/7
83: SIEMENS telegram 83, PZD-2/8
999: Free telegram configuration with BICO

Dependency: Refer to: p2038
Refer to: F01505, F01506

Note: If a value is not equal to 999, a telegram is set and the automatically set interconnections in the telegram are inhibited.
The inhibited interconnections can only be changed again after setting value 999.

p0922 IF1 PROFIdrive telegram selection / IF1 PD Telegr_sel

VECTOR_G

Can be changed: C2(1), T	**Calculated:** -	**Access level:** 1
Data type: Unsigned16	**Dynamic index:** -	**Func. diagram:** 1520, 2415, 2416, 2419, 2420, 2421, 2422, 2423
P-Group: Communications	**Units group:** -	**Unit selection:** -
Not for motor type: -	**Scaling:** -	**Expert list:** 1
Min 1	**Max** 999	**Factory setting** 999

Description: Sets the send and receive telegram.

Value:
1: Standard telegram 1, PZD-2/2
2: Standard telegram 2, PZD-4/4
20: Standard telegram 20, PZD-2/6
220: SIEMENS telegram 220, PZD-10/10
352: SIEMENS telegram 352, PZD-6/6
999: Free telegram configuration with BICO

Dependency: Refer to: F01505, F01506

© Siemens AG 2012 All Rights Reserved

Caution: Telegrams 2, 3 and 4 are not suitable for sensorless vector control (p1300 = 20).
For sensorless vector control, it is necessary that the setpoint speed is entered at the ramp-function generator input (e.g. p1070) and not after the ramp-function generator (p1155).

Note: If a value is not equal to 999, a telegram is set and the automatically set interconnections in the telegram are inhibited.
The inhibited interconnections can only be changed again after setting value 999.

p0922 IF1 PROFIdrive telegram selection / IF1 PD Telegr_sel

VECTOR_G (n/M)

Can be changed: C2(1), T	**Calculated:** -	**Access level:** 1
Data type: Unsigned16	**Dynamic index:** -	**Func. diagram:** 1520, 2415, 2416, 2419, 2420, 2421, 2422, 2423
P-Group: Communications	**Units group:** -	**Unit selection:** -
Not for motor type: -	**Scaling:** -	**Expert list:** 1
Min	**Max**	**Factory setting**
1	999	999

Description: Sets the send and receive telegram.

Value:
1: Standard telegram 1, PZD-2/2
2: Standard telegram 2, PZD-4/4
3: Standard telegram 3, PZD-5/9
4: Standard telegram 4, PZD-6/14
20: Standard telegram 20, PZD-2/6
220: SIEMENS telegram 220, PZD-10/10
352: SIEMENS telegram 352, PZD-6/6
999: Free telegram configuration with BICO

Dependency: Refer to: F01505, F01506

Caution: Telegrams 2, 3 and 4 are not suitable for sensorless vector control (p1300 = 20).
For sensorless vector control, it is necessary that the setpoint speed is entered at the ramp-function generator input (e.g. p1070) and not after the ramp-function generator (p1155).

Note: If a value is not equal to 999, a telegram is set and the automatically set interconnections in the telegram are inhibited.
The inhibited interconnections can only be changed again after setting value 999.

r0924[0...1] ZSW bit pulses enabled / ZSW pulse enab

VECTOR_G

Can be changed: -	**Calculated:** -	**Access level:** 3
Data type: Unsigned16	**Dynamic index:** -	**Func. diagram:** 2454, 2456
P-Group: Communications	**Units group:** -	**Unit selection:** -
Not for motor type: -	**Scaling:** -	**Expert list:** 1
Min	**Max**	**Factory setting**
-	-	-

Description: Displays the position of the "Pulses enabled" status signal in the PROFIdrive telegram.

Index:
[0] = Signal number
[1] = Bit position

p0925 PROFIdrive clock synchronous sign-of-life tolerance / PD SoL_tol

ENC, VECTOR_G (n/M)

Can be changed: U, T	**Calculated:** -	**Access level:** 3
Data type: Unsigned16	**Dynamic index:** -	**Func. diagram:** 2410
P-Group: Communications	**Units group:** -	**Unit selection:** -
Not for motor type: -	**Scaling:** -	**Expert list:** 1
Min	**Max**	**Factory setting**
0	65535	1

Description: Sets the number of tolerated consecutive sign-of-life errors of the clock-cycle synchronous master.
The sign-of-life signal is normally received in PZD4 (control word 2) from the master.

Dependency: Refer to: p2045, r2065
Refer to: F01912

© Siemens AG 2012 All Rights Reserved

Note: The sign-of-life monitoring is disabled for p0925 = 65535.

r0930 PROFIdrive operating mode / PD operating mode

VECTOR_G

Can be changed: -	**Calculated:** -	**Access level:** 3
Data type: Unsigned16	**Dynamic index:** -	**Func. diagram:** -
P-Group: Setpoints	**Units group:** -	**Unit selection:** -
Not for motor type: -	**Scaling:** -	**Expert list:** 1
Min	**Max**	**Factory setting**
-	-	-

Description: Displays the operating mode.
1: Closed-loop speed controlled operation with ramp-function generator
2: Closed-loop position controlled operation
3: Closed-loop speed controlled operation without ramp-function generator

r0944 CO: Counter for fault buffer changes / Fault buff change

All objects

Can be changed: -	**Calculated:** -	**Access level:** 2
Data type: Unsigned16	**Dynamic index:** -	**Func. diagram:** 8060
P-Group: Messages	**Units group:** -	**Unit selection:** -
Not for motor type: -	**Scaling:** -	**Expert list:** 1
Min	**Max**	**Factory setting**
-	-	-

Description: Displays fault buffer changes. This counter is incremented every time the fault buffer changes.
Recommend.: Used to check whether the fault buffer has been read out consistently.
Dependency: Refer to: r0945, r0947, r0948, r0949, r2109

r0945[0...63] Fault code / Fault code

All objects

Can be changed: -	**Calculated:** -	**Access level:** 2
Data type: Unsigned16	**Dynamic index:** -	**Func. diagram:** 1750, 8060
P-Group: Messages	**Units group:** -	**Unit selection:** -
Not for motor type: -	**Scaling:** -	**Expert list:** 1
Min	**Max**	**Factory setting**
-	-	-

Description: Displays the numbers of faults that have occurred.
Dependency: Refer to: r0947, r0948, r0949, r2109, r2130, r2133, r2136, r3120, r3122
Notice: The properties of the fault buffer should be taken from the corresponding product documentation.
Note: The buffer parameters are cyclically updated in the background (refer to status signal in r2139).
Fault buffer structure (general principle):
r0945[0], r0949[0], r0948[0], r2109[0], r3115[0] --> actual fault case, fault 1
. . .
r0945[7], r0949[7], r0948[7], r2109[7], r3115[7] --> actual fault case, fault 8
r0945[8], r0949[8], r0948[8], r2109[8], r3115[8] --> 1st acknowledged fault case, fault 1
. . .
r0945[15], r0949[15], r0948[15], r2109[15], r3115[15] --> 1st acknowledged fault case, fault 8
. . .
r0945[56], r0949[56], r0948[56], r2109[56], r3115[56] --> 7th acknowledged fault case, fault 1
. . .
r0945[63], r0949[63], r0948[63], r2109[63], r3115[63] --> 7th acknowledged fault case, fault 8

© Siemens AG 2012 All Rights Reserved

r0946[0...65534] Fault code list / Fault code list

All objects	**Can be changed:** -	**Calculated:** -	**Access level:** 3
	Data type: Unsigned16	**Dynamic index:** -	**Func. diagram:** 8060
	P-Group: Messages	**Units group:** -	**Unit selection:** -
	Not for motor type: -	**Scaling:** -	**Expert list:** 0
	Min	**Max**	**Factory setting**
	-	-	-

Description: Lists the fault codes stored in the drive unit.
The indices can only be accessed with a valid fault code.

Dependency: The parameter assigned to the fault code is entered in r0951 under the same index.

r0947[0...63] Fault number / Fault number

All objects	**Can be changed:** -	**Calculated:** -	**Access level:** 3
	Data type: Unsigned16	**Dynamic index:** -	**Func. diagram:** 1750, 8060
	P-Group: Messages	**Units group:** -	**Unit selection:** -
	Not for motor type: -	**Scaling:** -	**Expert list:** 1
	Min	**Max**	**Factory setting**
	-	-	-

Description: This parameter is identical to r0945.

r0948[0...63] Fault time received in milliseconds / t_fault recv ms

All objects	**Can be changed:** -	**Calculated:** -	**Access level:** 3
	Data type: Unsigned32	**Dynamic index:** -	**Func. diagram:** 1750, 8060
	P-Group: Messages	**Units group:** -	**Unit selection:** -
	Not for motor type: -	**Scaling:** -	**Expert list:** 1
	Min	**Max**	**Factory setting**
	- [ms]	- [ms]	- [ms]

Description: Displays the system runtime in milliseconds when the fault occurred.

Dependency: Refer to: r0945, r0947, r0949, r2109, r2114, r2130, r2133, r2136, r3115, r3120, r3122

Notice: The time comprises r2130 (days) and r0948 (milliseconds).

Note: The buffer parameters are cyclically updated in the background (refer to status signal in r2139).
The structure of the fault buffer and the assignment of the indices is shown in r0945.
When the parameter is read via PROFIdrive, the TimeDifference data type applies.

r0949[0...63] Fault value / Fault value

All objects	**Can be changed:** -	**Calculated:** -	**Access level:** 3
	Data type: Integer32	**Dynamic index:** -	**Func. diagram:** 1750, 8060
	P-Group: Messages	**Units group:** -	**Unit selection:** -
	Not for motor type: -	**Scaling:** -	**Expert list:** 1
	Min	**Max**	**Factory setting**
	-	-	-

Description: Displays additional information about the fault that occurred (as integer number).

Dependency: Refer to: r0945, r0947, r0948, r2109, r2130, r2133, r2136, r3115, r3120, r3122

Note: The buffer parameters are cyclically updated in the background (refer to status signal in r2139).
The structure of the fault buffer and the assignment of the indices is shown in r0945.

© Siemens AG 2012 All Rights Reserved

p0952 Fault cases, counter / Fault cases qty

All objects	**Can be changed:** U, T	**Calculated:** -	**Access level:** 3
	Data type: Unsigned16	**Dynamic index:** -	**Func. diagram:** 1710, 8060
	P-Group: Messages	**Units group:** -	**Unit selection:** -
	Not for motor type: -	**Scaling:** -	**Expert list:** 1
	Min	**Max**	**Factory setting**
	0	65535	0

Description: Number of fault situations that have occurred since the last reset.

Dependency: The fault buffer is deleted (cleared) by setting p0952 to 0.
Refer to: r0945, r0947, r0948, r0949, r2109, r2130, r2133, r2136

r0963 PROFIBUS baud rate / PB baud rate

CU_G130_DP, CU_G150_DP	**Can be changed:** -	**Calculated:** -	**Access level:** 3
	Data type: Unsigned16	**Dynamic index:** -	**Func. diagram:** -
	P-Group: Communications	**Units group:** -	**Unit selection:** -
	Not for motor type: -	**Scaling:** -	**Expert list:** 1
	Min	**Max**	**Factory setting**
	0	255	-

Description: Displays the corresponding value for the PROFIBUS baud rate.

Value:
0: 9.6 kbit/s
1: 19.2 kbit/s
2: 93.75 kbit/s
3: 187.5 kbit/s
4: 500 kbit/s
6: 1.5 Mbit/s
7: 3 Mbit/s
8: 6 Mbit/s
9: 12 Mbit/s
10: 31.25 kbit/s
11: 45.45 kbit/s
255: unknown

r0964[0...6] Device identification / Device ident.

CU_G130_DP, CU_G130_PN, CU_G150_DP, CU_G150_PN	**Can be changed:** -	**Calculated:** -	**Access level:** 2
	Data type: Unsigned16	**Dynamic index:** -	**Func. diagram:** -
	P-Group: Communications	**Units group:** -	**Unit selection:** -
	Not for motor type: -	**Scaling:** -	**Expert list:** 1
	Min	**Max**	**Factory setting**
	-	-	-

Description: Displays the device identification.

Index:
[0] = Company (Siemens = 42)
[1] = Device type
[2] = Firmware version
[3] = Firmware date (year)
[4] = Firmware date (day/month)
[5] = Number of drive objects
[6] = Firmware patch/hot fix

Note: Example:
r0964[0] = 42 --> SIEMENS
r0964[1] = device type, see below
r0964[2] = 403 --> first part of the firmware version V04.03 (for second part, refer to index 6)
r0964[3] = 2010 --> year 2010
r0964[4] = 1705 --> 17th of May
r0964[5] = 2 --> 2 drive objects
r0964[6] = 200 --> second part, firmware version (complete version: V04.03.02.00)

© Siemens AG 2012 All Rights Reserved

Device type:
r0964[1] = 5200 --> SINAMICS G150 CU320(-2 DP)
r0964[1] = 5201 --> SINAMICS G150 CU320-2 PN
r0964[1] = 5210 --> SINAMICS G130 CU320(-2 DP)
r0964[1] = 5211 --> SINAMICS G130 CU320-2 PN

r0965 PROFIdrive profile number / PD profile number

CU_G130_DP, CU_G130_PN, CU_G150_DP, CU_G150_PN

Can be changed: -	**Calculated:** -	**Access level:** 3
Data type: Unsigned16	**Dynamic index:** -	**Func. diagram:** -
P-Group: Communications	**Units group:** -	**Unit selection:** -
Not for motor type: -	**Scaling:** -	**Expert list:** 1
Min	**Max**	**Factory setting**
-	-	-

Description: Displays the PROFIdrive profile number and profile version.
Constant value = 0329 hex.
Byte 1: Profile number = 03 hex = PROFIdrive profile
Byte 2: Profile version = 29 hex = Version 4.1

Note: When the parameter is read via PROFIdrive, the Octet String 2 data type applies.

p0969 System runtime relative / t_System relative

CU_G130_DP, CU_G130_PN, CU_G150_DP, CU_G150_PN

Can be changed: T	**Calculated:** -	**Access level:** 3
Data type: Unsigned32	**Dynamic index:** -	**Func. diagram:** 1750, 8060
P-Group: Displays, signals	**Units group:** -	**Unit selection:** -
Not for motor type: -	**Scaling:** -	**Expert list:** 1
Min	**Max**	**Factory setting**
0 [ms]	4294967295 [ms]	0 [ms]

Description: Displays the system runtime in ms since the last POWER ON.

Note: The value in p0969 can only be reset to 0.
The value overflows after approx. 49 days.
When the parameter is read via PROFIdrive, the TimeDifference data type applies.

p0970 Reset infeed parameter / INF par reset

B_INF

Can be changed: C2(30)	**Calculated:** -	**Access level:** 2
Data type: Unsigned16	**Dynamic index:** -	**Func. diagram:** -
P-Group: Factory settings	**Units group:** -	**Unit selection:** -
Not for motor type: -	**Scaling:** -	**Expert list:** 1
Min	**Max**	**Factory setting**
0	100	0

Description: The parameter is used to initiate a reset of the parameters of an individual infeed unit.
The parameters of the basic commissioning (refer to p0009) are in this case not reset (p0107, p0108, p0121, p0170). These can only be reset using the factory setting of the complete drive unit (p0976).
The sampling times (p0111, p0112, p0115) are only not reset if this results in a conflict with the basic clock cycle (p0110).

Value:
0: Inactive
1: Start a parameter reset
100: Start a BICO interconnection reset

Notice: After the value has been modified, no further parameter modifications can be made and the status is shown in r3996. Modifications can be made again when r3996 = 0.

Note: A factory setting run can only be started if p0010 was first set to 30 (parameter reset).
At the end of the calculations, p0970 is automatically set to 0.
Parameter reset has been completed if p0970 and p0010 have been set to 0.

© Siemens AG 2012 All Rights Reserved

p0970 ENCODER reset parameters / ENC par reset

ENC

Can be changed: C2(30)	**Calculated:** -	**Access level:** 2
Data type: Unsigned16	**Dynamic index:** -	**Func. diagram:** -
P-Group: Factory settings	**Units group:** -	**Unit selection:** -
Not for motor type: -	**Scaling:** -	**Expert list:** 1
Min	**Max**	**Factory setting**
0	100	0

Description: The parameter is used to initiate the reset of the parameters on the ENCODER drive object.
Parameter p0141 is not reset. It is only reset if the entire drive unit is reset to the factory settings (p0976).

Value:
0: Inactive
1: Start a parameter reset
100: Start a BICO interconnection reset

Notice: After the value has been modified, no further parameter modifications can be made and the status is shown in r3996. Modifications can be made again when r3996 = 0.

Note: A factory setting run can only be started if p0010 was first set to 30 (parameter reset).
At the end of the calculations, p0970 is automatically set to 0.
Parameter reset has been completed if p0970 and p0010 have been set to 0.

p0970 TB30 reset parameters / TB30 par reset

TB30

Can be changed: C2(30)	**Calculated:** -	**Access level:** 2
Data type: Unsigned16	**Dynamic index:** -	**Func. diagram:** -
P-Group: Factory settings	**Units group:** -	**Unit selection:** -
Not for motor type: -	**Scaling:** -	**Expert list:** 1
Min	**Max**	**Factory setting**
0	100	0

Description: The parameter is used to initiate a reset of the parameters on Terminal Board 30 (TB30).
The sampling time p4099 is not reset if in so doing a conflict occurs with the basic clock cycle.
Parameter p0161 is not reset. It is only reset if the entire drive unit is reset to the factory settings (p0976).

Value:
0: Inactive
1: Start a parameter reset
100: Start a BICO interconnection reset

Notice: After the value has been modified, no further parameter modifications can be made and the status is shown in r3996. Modifications can be made again when r3996 = 0.

Note: A factory setting run can only be started if p0010 was first set to 30 (parameter reset).
At the end of the calculations, p0970 is automatically set to 0.
Parameter reset has been completed if p0970 and p0010 have been set to 0.

p0970 TM150 reset parameters / TM150 par reset

TM150

Can be changed: C2(30)	**Calculated:** -	**Access level:** 2
Data type: Unsigned16	**Dynamic index:** -	**Func. diagram:** -
P-Group: Factory settings	**Units group:** -	**Unit selection:** -
Not for motor type: -	**Scaling:** -	**Expert list:** 1
Min	**Max**	**Factory setting**
0	100	0

Description: The parameter is used to initiate a reset of the parameters on Terminal Module 150 (TM150).

Value:
0: Inactive
1: Start a parameter reset
100: Start a BICO interconnection reset

Dependency: Refer to: p0010

Notice: After the value has been modified, no further parameter modifications can be made and the status is shown in r3996. Modifications can be made again when r3996 = 0.

Note: A factory setting run can only be started if p0010 was first set to 30 (parameter reset).
At the end of the calculations, p0970 is automatically set to 0.

© Siemens AG 2012 All Rights Reserved

p0970 TM31 reset parameters / TM31 par reset

TM31

Can be changed: C2(30)	**Calculated:** -	**Access level:** 2
Data type: Unsigned16	**Dynamic index:** -	**Func. diagram:** -
P-Group: Factory settings	**Units group:** -	**Unit selection:** -
Not for motor type: -	**Scaling:** -	**Expert list:** 1
Min	**Max**	**Factory setting**
0	100	0

Description: The parameter is used to initiate a reset of the parameters on Terminal Module 31 (TM31).
The sampling time p4099 is not reset if in so doing a conflict occurs with the basic clock cycle.
Parameter p0151 is not reset. It is only reset if the entire drive unit is reset to the factory settings (p0976).

Value:
0: Inactive
1: Start a parameter reset
100: Start a BICO interconnection reset

Dependency: Refer to: p0010

Notice: After the value has been modified, no further parameter modifications can be made and the status is shown in r3996. Modifications can be made again when r3996 = 0.

Note: A factory setting run can only be started if p0010 was first set to 30 (parameter reset).
At the end of the calculations, p0970 is automatically set to 0.

p0970 TM54F reset parameters / TM54F par reset

TM54F_MA

Can be changed: C2(30)	**Calculated:** -	**Access level:** 2
Data type: Unsigned16	**Dynamic index:** -	**Func. diagram:** -
P-Group: Factory settings	**Units group:** -	**Unit selection:** -
Not for motor type: -	**Scaling:** -	**Expert list:** 1
Min	**Max**	**Factory setting**
0	100	0

Description: The parameter is used to initiate a reset of the parameters on Terminal Module 54F (TM54F).
Parameter p0151 is not reset. It is only reset if the entire drive unit is reset to the factory settings (p0976).

Value:
0: Inactive
1: Start a parameter reset
5: Starts a safety parameter reset
100: Start a BICO interconnection reset

Notice: After the value has been modified, no further parameter modifications can be made and the status is shown in r3996. Modifications can be made again when r3996 = 0.

Note: A factory setting run can only be started if p0010 was first set to 30 (parameter reset).
At the end of the calculations, p0970 is automatically set to 0.
Parameter reset has been completed if p0970 and p0010 have been set to 0.
For p0970 = 5 the following applies:
The password for Safety Integrated must be set.
When Safety Integrated is enabled, this can result in error messages, which then require an acceptance test to be performed.
Then save the parameters and carry out a POWER ON.

p0970 Reset drive parameters / Drive par reset

VECTOR_G

Can be changed: C2(30)	**Calculated:** -	**Access level:** 2
Data type: Unsigned16	**Dynamic index:** -	**Func. diagram:** -
P-Group: Factory settings	**Units group:** -	**Unit selection:** -
Not for motor type: -	**Scaling:** -	**Expert list:** 1
Min	**Max**	**Factory setting**
0	100	0

Description: The parameter is used to initiate the reset of the parameters of an individual drive unit.

© Siemens AG 2012 All Rights Reserved

Parameters p0100, p0205 (only for VECTOR) and the parameters of the basic drive commissioning (p0009) are not reset (p0107, p0108, p0111, p0112, p0115, p0121, p0130, p0131, p0140, p0141, p0142, p0170, p0186 ... p0189). These can only be reset using the factory setting of the complete drive unit (p0976).

Value:
0: Inactive
1: Start a parameter reset
5: Starts a safety parameter reset
100: Start a BICO interconnection reset

Dependency: Refer to: F01659

Notice: After the value has been modified, no further parameter modifications can be made and the status is shown in r3996. Modifications can be made again when r3996 = 0.

Note: A factory setting run can only be started if p0010 was first set to 30 (parameter reset).

At the end of the calculations, p0970 is automatically set to 0.

Parameter reset has been completed if p0970 and p0010 have been set to 0.

For p0970 = 5 the following applies:

The password for Safety Integrated must be set.

When Safety Integrated is enabled, this can result in error messages, which then require an acceptance test to be performed.

Then save the parameters and carry out a POWER ON.

For p0970 = 1 the following applies:

If a Safety Integrated function is parameterized (p9601), then the safety parameters are not reset. In this case, a fault F01659 is output with fault value 2.

p0971 Save drive object parameters / Drv_obj par save

All objects

Can be changed: U, T	**Calculated:** -	**Access level:** 1
Data type: Unsigned16	**Dynamic index:** -	**Func. diagram:** -
P-Group: Factory settings	**Units group:** -	**Unit selection:** -
Not for motor type: -	**Scaling:** -	**Expert list:** 1
Min	**Max**	**Factory setting**
0	1	0

Description: Setting to save the parameter of the particular drive object in the non-volatile memory.

Value:
0: Inactive
1: Save drive object

Dependency: Refer to: p0977, p1960, p3845, r3996

Caution: The Control Unit power supply may only be powered down after data has been saved (i.e. after data save has been started, wait until the parameter again has the value 0).

Notice: Writing to parameters is inhibited while saving.

The progress while saving is displayed in r3996.

Note: Starting from the particular drive object, the following parameters are saved:

CU3xx: Device-specific parameters and PROFIBUS device parameters.

Other objects: Parameters of the actual object and PROFIBUS device parameters.

Prerequisite:

In order that the parameter of a drive object, saved with p0971 = 1, is read the next time that the Control Unit is booted, then all parameters must, as a minimum, have first been saved once with p0977 = 1.

p0972 Drive unit reset / Drv_unit reset

CU_G130_DP, CU_G130_PN, CU_G150_DP, CU_G150_PN

Can be changed: U, T	**Calculated:** -	**Access level:** 1
Data type: Unsigned16	**Dynamic index:** -	**Func. diagram:** -
P-Group: -	**Units group:** -	**Unit selection:** -
Not for motor type: -	**Scaling:** -	**Expert list:** 1
Min	**Max**	**Factory setting**
0	3	0

Description: Sets the required procedure to execute a hardware reset for the drive unit.

Value:
0: Inactive
1: Hardware-Reset immediate

© Siemens AG 2012 All Rights Reserved

2: Hardware reset preparation
3: Hardware reset after cyclic communication has failed

Danger: It must be absolutely ensured that the system is in a safe condition.

The memory card/device memory of the Control Unit must not be accessed.

Note: If value = 1:

Reset is immediately executed and communications interrupted.

After communications have been established, check the reset operation (refer below).

If value = 2:

Help to check the reset operation.

Firstly, set p0972 = 2 and then read back. Secondly, set p0972 = 1 (it is possible that this request is possibly no longer acknowledged). The communication is then interrupted.

After communications have been established, check the reset operation (refer below).

If value = 3:

The reset is executed after interrupting cyclic communication. This setting is used to implement a synchronized reset by a control for several drive units.

If cyclic communication is not active, then the reset is immediately executed.

If the cyclic communication is active for both PROFIdrive interfaces, then the reset is executed after completing both cycle communications.

After communications have been established, check the reset operation (refer below).

To check the reset operation:

After the drive unit has been restarted and communications have been established, read p0972 and check the following:

p0972 = 0? --> The reset was successfully executed.

p0972 > 0? --> The reset was not executed.

r0975[0...10] Drive object identification / DO identification

All objects	**Can be changed:** -	**Calculated:** -	**Access level:** 2
	Data type: Unsigned16	**Dynamic index:** -	**Func. diagram:** -
	P-Group: Communications	**Units group:** -	**Unit selection:** -
	Not for motor type: -	**Scaling:** -	**Expert list:** 1
	Min	**Max**	**Factory setting**
	-	-	-

Description: Displays the identification of the drive object.

Index:
[0] = Company (Siemens = 42)
[1] = Drive object type
[2] = Firmware version
[3] = Firmware date (year)
[4] = Firmware date (day/month)
[5] = PROFIdrive drive object, type class
[6] = PROFIdrive drive object, sub-type Class 1
[7] = Drive object number
[8] = Reserved
[9] = Reserved
[10] = Firmware patch/hot fix

Note: Example:

r0975[0] = 42 --> SIEMENS

r0975[1] = 11 --> SERVO drive object type

r0975[2] = 102 --> first part, firmware version V01.02 (second part, refer to index 10)

r0975[3] = 2003 --> year 2003

r0975[4] = 1401 --> 14th of January

r0975[5] = 1 --> PROFIdrive drive object, type class

r0975[6] = 9 --> PROFIdrive drive object sub-type class 1

r0975[7] = 2 --> drive object number = 2

r0975[8] = 0 (reserved)

© Siemens AG 2012 All Rights Reserved

r0975[9] = 0 (reserved)
r0975[10] = 600 --> second part, firmware version (complete version: V01.02.06.00)

p0976 Reset and load all parameters / Reset load all par

CU_G130_DP, CU_G130_PN, CU_G150_DP, CU_G150_PN

Can be changed: C1(30)	**Calculated:** -	**Access level:** 1
Data type: Unsigned16	**Dynamic index:** -	**Func. diagram:** -
P-Group: Factory settings	**Units group:** -	**Unit selection:** -
Not for motor type: -	**Scaling:** -	**Expert list:** 1
Min	**Max**	**Factory setting**
0	1013	0

Description: Resets or downloads all parameters of the drive system.

Value:
0: Inactive
1: Start reset of all parameters to factory setting
2: Start dnload of param. saved in non-volatile mem w/ p0977=1
3: Start dnload of volatile parameters from RAM
10: Start dnload of param. saved in non-volatile mem w/ p0977=10
11: Start dnload of param. saved in non-volatile mem w/ p0977=11
12: Start dnload of param. saved in non-volatile mem w/ p0977=12
20: Start download Siemens internal setting 20
21: Start download Siemens internal setting 21
22: Start download Siemens internal setting 22
23: Start download Siemens internal setting 23
24: Start download Siemens internal setting 24
25: Start download Siemens internal setting 25
26: Start download Siemens internal setting 26
100: Start resetting of all BICO interconnections
1011: Start dnload of param. saved in volatile mem w/ p0977=1011
1012: Start dnload of param. saved in volatile mem w/ p0977=1012
1013: Start dnload of param. saved in volatile mem w/ p0977=1013

Notice: After the value has been modified, no further parameter modifications can be made and the status is shown in r3996. Modifications can be made again when r3996 = 0.

Note: After all of the parameters have been reset to their factory setting, the system must be commissioned for the first time again.

Resetting or loading is realized in the non-volatile memory.

Procedure:

1. Set p0009 = 30 (parameter reset).
2. Set p0976 to "required value". The system is rebooted.

p0976 is automatically set to 0 and p0009 is automatically set to 1 after this has been carried out.

p0977 Save all parameters / Save all par

CU_G130_DP, CU_G130_PN, CU_G150_DP, CU_G150_PN

Can be changed: U, T	**Calculated:** -	**Access level:** 1
Data type: Unsigned16	**Dynamic index:** -	**Func. diagram:** -
P-Group: Factory settings	**Units group:** -	**Unit selection:** -
Not for motor type: -	**Scaling:** -	**Expert list:** 1
Min	**Max**	**Factory setting**
0	1013	0

Description: Saves all parameters of the drive system to the non-volatile memory.

Value:
0: Inactive
1: Save in non-volatile memory - downloaded at POWER ON
10: Save as opt. in non-vol. memory - downloaded w/ p0976=10
11: Save as opt. in non-vol. memory - downloaded w/ p0976=11
12: Save as opt. in non-vol. memory - downloaded w/ p0976=12
20: Save in non-volatile memory as setting 20 (reserved)
21: Save in non-volatile memory as setting 21 (reserved)
22: Save in non-volatile memory as setting 22 (reserved)
23: Save in non-volatile memory as setting 23 (reserved)
24: Save in non-volatile memory as setting 24 (reserved)
25: Save in non-volatile memory as setting 25 (reserved)

© Siemens AG 2012 All Rights Reserved

26: Save in non-volatile memory as setting 26 (reserved)
80: Save in non-volatile memory time-optimized (reserved)
1011: Save in volatile memory, downloaded with p0976=1011
1012: Save in volatile memory, downloaded with p0976=1012
1013: Save in volatile memory, downloaded with p0976=1013

Dependency: Refer to: p0976, p1960, p3845, r3996

Caution: The Control Unit power supply may only be powered down after data has been saved (i.e. after data save has been started, wait until the parameter again has the value 0).

Notice: Writing to parameters is inhibited while saving.
The progress while saving is displayed in r3996.

Note: Parameters saved with p0977 = 10, 11 or 12 can be downloaded again with p0976 = 10, 11 or 12.

p0978[0...24] List of drive objects / List of the DO

CU_G130_DP, CU_G130_PN, CU_G150_DP, CU_G150_PN

Can be changed: C1(1)	**Calculated:** -	**Access level:** 2
Data type: Unsigned8	**Dynamic index:** -	**Func. diagram:** -
P-Group: Topology	**Units group:** -	**Unit selection:** -
Not for motor type: -	**Scaling:** -	**Expert list:** 1
Min	**Max**	**Factory setting**
0	255	[0] 1 [1...24] 0

Description: This parameter is an image of p0101 in conformance with PROFIdrive.
Parameters p0101 and p0978 contain the following information:
1) The same number of drive objects
2) The same drive objects
In this sense, they are consistent.
Difference between p0101 and p0978:
p0978 can be re-sorted and a zero inserted in order to identify those drive objects that participate in the process data exchange and to define their sequence in the process data exchange. Drive objects that are listed after the first zero, are excluded from the process data exchange.
For p0978, in addition, the value 255 can be inserted a multiple number of times.
p0978[n] = 255 means: The drive object is visible for the PROFIBUS master and is empty (without any actual process data exchange). This allows cyclic communications of a PROFIBUS master with unchanged configuring to the drive units with a lower number of drive objects.

Dependency: Refer to: p0101, p0971, p0977

Note: p0978 cannot be changed when the drive system is first commissioned. The reason for this is that at this time the actual topology has still not been acknowledged (p0099 is still not equal to r0098 and p0009 is set to 0).

r0979[0...10] PROFIdrive encoder format / PD encoder format

ENC

Can be changed: -	**Calculated:** -	**Access level:** 3
Data type: Unsigned32	**Dynamic index:** -	**Func. diagram:** 4010, 4704
P-Group: Encoder	**Units group:** -	**Unit selection:** -
Not for motor type: -	**Scaling:** -	**Expert list:** 1
Min	**Max**	**Factory setting**
-	-	-

Description: Displays the actual position encoder used according to PROFIdrive.

Index:
[0] = Header
[1] = Type, encoder 1
[2] = Resolution enc 1
[3] = Shift factor G1_XIST1
[4] = Shift factor G1_XIST2
[5] = Distinguishable revolutions encoder 1
[6...10] = Reserved

Note: Information about the individual indices can be taken from the following literature:
PROFIdrive Profile Drive Technology

© Siemens AG 2012 All Rights Reserved

r0979[0...10] PROFIdrive encoder format / PD encoder format

ENC (Lin_enc)

Can be changed: -	**Calculated:** -	**Access level:** 3
Data type: Unsigned32	**Dynamic index:** -	**Func. diagram:** 4010, 4704
P-Group: Encoder	**Units group:** -	**Unit selection:** -
Not for motor type: -	**Scaling:** -	**Expert list:** 1
Min	**Max**	**Factory setting**
-	-	-

Description: Displays the actual position encoder used according to PROFIdrive.

Index:
[0] = Header
[1] = Type, encoder 1
[2] = Resolution enc 1
[3] = Shift factor G1_XIST1
[4] = Shift factor G1_XIST2
[5] = Distinguishable distance encoder 1
[6...10] = Reserved

Note: Information about the individual indices can be taken from the following literature:
PROFIdrive Profile Drive Technology

r0979[0...30] PROFIdrive encoder format / PD encoder format

VECTOR_G

Can be changed: -	**Calculated:** -	**Access level:** 3
Data type: Unsigned32	**Dynamic index:** -	**Func. diagram:** 4010, 4704
P-Group: Encoder	**Units group:** -	**Unit selection:** -
Not for motor type: -	**Scaling:** -	**Expert list:** 1
Min	**Max**	**Factory setting**
-	-	-

Description: Displays the actual position encoder used according to PROFIdrive.

Index:
[0] = Header
[1] = Type, encoder 1
[2] = Resolution enc 1
[3] = Shift factor G1_XIST1
[4] = Shift factor G1_XIST2
[5] = Distinguishable revolutions encoder 1
[6...10] = Reserved
[11] = Type, encoder 2
[12] = Resolution enc 2
[13] = Shift factor G2_XIST1
[14] = Shift factor G2_XIST2
[15] = Distinguishable revolutions encoder 2
[16...20] = Reserved
[21] = Type, encoder 3
[22] = Resolution enc 3
[23] = Shift factor G3_XIST1
[24] = Shift factor G3_XIST2
[25] = Distinguishable revolutions encoder 3
[26...30] = Reserved

Note: Information about the individual indices can be taken from the following literature:
PROFIdrive Profile Drive Technology

r0980[0...299] List of existing parameters 1 / List avail par 1

All objects

Can be changed: -	**Calculated:** -	**Access level:** 4
Data type: Unsigned16	**Dynamic index:** -	**Func. diagram:** -
P-Group: -	**Units group:** -	**Unit selection:** -
Not for motor type: -	**Scaling:** -	**Expert list:** 0
Min	**Max**	**Factory setting**
-	-	-

Description: Displays the parameters that exist for this drive.

© Siemens AG 2012 All Rights Reserved

Dependency: Refer to: r0981, r0989

Note: The existing parameters are displayed in indices 0 to 298. If an index contains the value 0, then the list ends here. In a long list, index 299 contains the parameter number at which position the list continues.

This list consists solely of the following parameters:

r0980[0...299], r0981[0...299] ... r0989[0...299]

The parameters in this list are not displayed in the expert list of the commissioning software. However, they can be read from a higher-level control system (e.g. PROFIBUS master).

r0981[0...299] List of existing parameters 2 / List avail par 2

All objects	**Can be changed:** -	**Calculated:** -	**Access level:** 4
	Data type: Unsigned16	**Dynamic index:** -	**Func. diagram:** -
	P-Group: -	**Units group:** -	**Unit selection:** -
	Not for motor type: -	**Scaling:** -	**Expert list:** 0
	Min	**Max**	**Factory setting**
	-	-	-

Description: Displays the parameters that exist for this drive.

Dependency: Refer to: r0980, r0989

Note: The existing parameters are displayed in indices 0 to 298. If an index contains the value 0, then the list ends here. In a long list, index 299 contains the parameter number at which position the list continues.

This list consists solely of the following parameters:

r0980[0...299], r0981[0...299] ... r0989[0...299]

The parameters in this list are not displayed in the expert list of the commissioning software. However, they can be read from a higher-level control system (e.g. PROFIBUS master).

r0989[0...299] List of existing parameters 10 / List avail par 10

All objects	**Can be changed:** -	**Calculated:** -	**Access level:** 4
	Data type: Unsigned16	**Dynamic index:** -	**Func. diagram:** -
	P-Group: -	**Units group:** -	**Unit selection:** -
	Not for motor type: -	**Scaling:** -	**Expert list:** 0
	Min	**Max**	**Factory setting**
	-	-	-

Description: Displays the parameters that exist for this drive.

Dependency: Refer to: r0980, r0981

Note: The existing parameters are displayed in indices 0 to 298. If an index contains the value 0, then the list ends here.

This list consists solely of the following parameters:

r0980[0...299], r0981[0...299] ... r0989[0...299]

The parameters in this list are not displayed in the expert list of the commissioning software. However, they can be read from a higher-level control system (e.g. PROFIBUS master).

r0990[0...99] List of modified parameters 1 / List chang. par 1

All objects	**Can be changed:** -	**Calculated:** -	**Access level:** 3
	Data type: Unsigned16	**Dynamic index:** -	**Func. diagram:** -
	P-Group: -	**Units group:** -	**Unit selection:** -
	Not for motor type: -	**Scaling:** -	**Expert list:** 0
	Min	**Max**	**Factory setting**
	-	-	-

Description: Displays those parameters with a value other than the factory setting for this drive.

Dependency: Refer to: r0991, r0999

Note: Modified parameters are displayed in indices 0 to 98. If an index contains the value 0, then the list ends here. In a long list, index 99 contains the parameter number at which position the list continues.

This list consists solely of the following parameters:

r0990[0...99], r0991[0...99] ... r0999[0...99]

The parameters in this list are not displayed in the expert list of the commissioning software. However, they can be read from a higher-level control system (e.g. PROFIBUS master).

© Siemens AG 2012 All Rights Reserved

r0991[0...99] List of modified parameters 2 / List chang. par 2

All objects	**Can be changed:** -	**Calculated:** -	**Access level:** 3
	Data type: Unsigned16	**Dynamic index:** -	**Func. diagram:** -
	P-Group: -	**Units group:** -	**Unit selection:** -
	Not for motor type: -	**Scaling:** -	**Expert list:** 0
	Min	**Max**	**Factory setting**
	-	-	-

Description: Displays those parameters with a value other than the factory setting for this drive.

Dependency: Refer to: r0990, r0999

Note: Modified parameters are displayed in indices 0 to 98. If an index contains the value 0, then the list ends here. In a long list, index 99 contains the parameter number at which position the list continues.

This list consists solely of the following parameters:

r0990[0...99], r0991[0...99] ... r0999[0...99]

The parameters in this list are not displayed in the expert list of the commissioning software. However, they can be read from a higher-level control system (e.g. PROFIBUS master).

r0999[0...99] List of modified parameters 10 / List chang. par 10

All objects	**Can be changed:** -	**Calculated:** -	**Access level:** 3
	Data type: Unsigned16	**Dynamic index:** -	**Func. diagram:** -
	P-Group: -	**Units group:** -	**Unit selection:** -
	Not for motor type: -	**Scaling:** -	**Expert list:** 0
	Min	**Max**	**Factory setting**
	-	-	-

Description: Displays those parameters with a value other than the factory setting for this drive.

Dependency: Refer to: r0990, r0991

Note: Modified parameters are displayed in indices 0 to 98. If an index contains the value 0, then the list ends here.

This list consists solely of the following parameters:

r0990[0...99], r0991[0...99] ... r0999[0...99]

The parameters in this list are not displayed in the expert list of the commissioning software. However, they can be read from a higher-level control system (e.g. PROFIBUS master).

p1000[0...n] Macro Connector Inputs (CI) for speed setpoints / Macro CI n_set

VECTOR_G	**Can be changed:** C2(1), T	**Calculated:** -	**Access level:** 1
	Data type: Unsigned32	**Dynamic index:** CDS, p0170	**Func. diagram:** -
	P-Group: Commands	**Units group:** -	**Unit selection:** -
	Not for motor type: -	**Scaling:** -	**Expert list:** 1
	Min	**Max**	**Factory setting**
	0	999999	0

Description: Runs the corresponding macro files.

The Connector Inputs (CI) for the speed setpoints of the appropriate Command Data Set (CDS) are appropriately interconnected.

The selected macro file must be available on the memory card/device memory.

Example:

p1000 = 6 --> the macro file PM000006.ACX is run.

Dependency: Refer to: p0015, p0700, p1500, r8572

Caution: When executing a specific macro, the corresponding programmed settings are made and become active.

Notice: No errors were issued during quick commissioning (p3900 = 1) when writing to parameters of the QUICK_IBN group!

Note: The macros in the specified directory are displayed in r8572. r8572 is not in the expert list of the commissioning software.

Macros available as standard are described in the technical documentation of the particular product.

CI: Connector Input

© Siemens AG 2012 All Rights Reserved

p1001[0...n] CO: Fixed speed setpoint 1 / n_set_fixed 1

VECTOR_G	**Can be changed:** U, T	**Calculated:** -	**Access level:** 2
	Data type: FloatingPoint32	**Dynamic index:** DDS, p0180	**Func. diagram:** 1021, 3010
	P-Group: Setpoints	**Units group:** 3_1	**Unit selection:** p0505
	Not for motor type: -	**Scaling:** p2000	**Expert list:** 1
	Min	**Max**	**Factory setting**
	-210000.000 [rpm]	210000.000 [rpm]	0.000 [rpm]

Description: Sets a value for the fixed speed / velocity setpoint 1.

Dependency: Refer to: p1020, p1021, p1022, p1023, r1024, r1197

Notice: A BICO interconnection to a parameter that belongs to a drive data set always acts on the effective data set.

p1002[0...n] CO: Fixed speed setpoint 2 / n_set_fixed 2

VECTOR_G	**Can be changed:** U, T	**Calculated:** -	**Access level:** 2
	Data type: FloatingPoint32	**Dynamic index:** DDS, p0180	**Func. diagram:** 3010
	P-Group: Setpoints	**Units group:** 3_1	**Unit selection:** p0505
	Not for motor type: -	**Scaling:** p2000	**Expert list:** 1
	Min	**Max**	**Factory setting**
	-210000.000 [rpm]	210000.000 [rpm]	0.000 [rpm]

Description: Sets a value for the fixed speed / velocity setpoint 2.

Dependency: Refer to: p1020, p1021, p1022, p1023, r1024, r1197

Notice: A BICO interconnection to a parameter that belongs to a drive data set always acts on the effective data set.

p1003[0...n] CO: Fixed speed setpoint 3 / n_set_fixed 3

VECTOR_G	**Can be changed:** U, T	**Calculated:** -	**Access level:** 2
	Data type: FloatingPoint32	**Dynamic index:** DDS, p0180	**Func. diagram:** 3010
	P-Group: Setpoints	**Units group:** 3_1	**Unit selection:** p0505
	Not for motor type: -	**Scaling:** p2000	**Expert list:** 1
	Min	**Max**	**Factory setting**
	-210000.000 [rpm]	210000.000 [rpm]	0.000 [rpm]

Description: Sets a value for the fixed speed / velocity setpoint 3.

Dependency: Refer to: p1020, p1021, p1022, p1023, r1024, r1197

Notice: A BICO interconnection to a parameter that belongs to a drive data set always acts on the effective data set.

p1004[0...n] CO: Fixed speed setpoint 4 / n_set_fixed 4

VECTOR_G	**Can be changed:** U, T	**Calculated:** -	**Access level:** 2
	Data type: FloatingPoint32	**Dynamic index:** DDS, p0180	**Func. diagram:** 3010
	P-Group: Setpoints	**Units group:** 3_1	**Unit selection:** p0505
	Not for motor type: -	**Scaling:** p2000	**Expert list:** 1
	Min	**Max**	**Factory setting**
	-210000.000 [rpm]	210000.000 [rpm]	0.000 [rpm]

Description: Sets a value for the fixed speed / velocity setpoint 4.

Dependency: Refer to: p1020, p1021, p1022, p1023, r1024, r1197

Notice: A BICO interconnection to a parameter that belongs to a drive data set always acts on the effective data set.

© Siemens AG 2012 All Rights Reserved

p1005[0...n] CO: Fixed speed setpoint 5 / n_set_fixed 5

VECTOR_G	**Can be changed:** U, T	**Calculated:** -	**Access level:** 2
	Data type: FloatingPoint32	**Dynamic index:** DDS, p0180	**Func. diagram:** 3010
	P-Group: Setpoints	**Units group:** 3_1	**Unit selection:** p0505
	Not for motor type: -	**Scaling:** p2000	**Expert list:** 1
	Min	**Max**	**Factory setting**
	-210000.000 [rpm]	210000.000 [rpm]	0.000 [rpm]

Description: Sets a value for the fixed speed / velocity setpoint 5.

Dependency: Refer to: p1020, p1021, p1022, p1023, r1024, r1197

Notice: A BICO interconnection to a parameter that belongs to a drive data set always acts on the effective data set.

p1006[0...n] CO: Fixed speed setpoint 6 / n_set_fixed 6

VECTOR_G	**Can be changed:** U, T	**Calculated:** -	**Access level:** 2
	Data type: FloatingPoint32	**Dynamic index:** DDS, p0180	**Func. diagram:** 3010
	P-Group: Setpoints	**Units group:** 3_1	**Unit selection:** p0505
	Not for motor type: -	**Scaling:** p2000	**Expert list:** 1
	Min	**Max**	**Factory setting**
	-210000.000 [rpm]	210000.000 [rpm]	0.000 [rpm]

Description: Sets a value for the fixed speed / velocity setpoint 6.

Dependency: Refer to: p1020, p1021, p1022, p1023, r1024, r1197

Notice: A BICO interconnection to a parameter that belongs to a drive data set always acts on the effective data set.

p1007[0...n] CO: Fixed speed setpoint 7 / n_set_fixed 7

VECTOR_G	**Can be changed:** U, T	**Calculated:** -	**Access level:** 2
	Data type: FloatingPoint32	**Dynamic index:** DDS, p0180	**Func. diagram:** 3010
	P-Group: Setpoints	**Units group:** 3_1	**Unit selection:** p0505
	Not for motor type: -	**Scaling:** p2000	**Expert list:** 1
	Min	**Max**	**Factory setting**
	-210000.000 [rpm]	210000.000 [rpm]	0.000 [rpm]

Description: Sets a value for the fixed speed / velocity setpoint 7.

Dependency: Refer to: p1020, p1021, p1022, p1023, r1024, r1197

Notice: A BICO interconnection to a parameter that belongs to a drive data set always acts on the effective data set.

p1008[0...n] CO: Fixed speed setpoint 8 / n_set_fixed 8

VECTOR_G	**Can be changed:** U, T	**Calculated:** -	**Access level:** 2
	Data type: FloatingPoint32	**Dynamic index:** DDS, p0180	**Func. diagram:** 3010
	P-Group: Setpoints	**Units group:** 3_1	**Unit selection:** p0505
	Not for motor type: -	**Scaling:** p2000	**Expert list:** 1
	Min	**Max**	**Factory setting**
	-210000.000 [rpm]	210000.000 [rpm]	0.000 [rpm]

Description: Sets a value for the fixed speed / velocity setpoint 8.

Dependency: Refer to: p1020, p1021, p1022, p1023, r1024, r1197

Notice: A BICO interconnection to a parameter that belongs to a drive data set always acts on the effective data set.

© Siemens AG 2012 All Rights Reserved

p1009[0...n] CO: Fixed speed setpoint 9 / n_set_fixed 9

VECTOR_G	**Can be changed:** U, T	**Calculated:** -	**Access level:** 2
	Data type: FloatingPoint32	**Dynamic index:** DDS, p0180	**Func. diagram:** 3010
	P-Group: Setpoints	**Units group:** 3_1	**Unit selection:** p0505
	Not for motor type: -	**Scaling:** p2000	**Expert list:** 1
	Min	**Max**	**Factory setting**
	-210000.000 [rpm]	210000.000 [rpm]	0.000 [rpm]

Description: Sets a value for the fixed speed / velocity setpoint 9.

Dependency: Refer to: p1020, p1021, p1022, p1023, r1024, r1197

Notice: A BICO interconnection to a parameter that belongs to a drive data set always acts on the effective data set.

p1010[0...n] CO: Fixed speed setpoint 10 / n_set_fixed 10

VECTOR_G	**Can be changed:** U, T	**Calculated:** -	**Access level:** 2
	Data type: FloatingPoint32	**Dynamic index:** DDS, p0180	**Func. diagram:** 3010
	P-Group: Setpoints	**Units group:** 3_1	**Unit selection:** p0505
	Not for motor type: -	**Scaling:** p2000	**Expert list:** 1
	Min	**Max**	**Factory setting**
	-210000.000 [rpm]	210000.000 [rpm]	0.000 [rpm]

Description: Sets a value for the fixed speed / velocity setpoint 10.

Dependency: Refer to: p1020, p1021, p1022, p1023, r1024, r1197

Notice: A BICO interconnection to a parameter that belongs to a drive data set always acts on the effective data set.

p1011[0...n] CO: Fixed speed setpoint 11 / n_set_fixed 11

VECTOR_G	**Can be changed:** U, T	**Calculated:** -	**Access level:** 2
	Data type: FloatingPoint32	**Dynamic index:** DDS, p0180	**Func. diagram:** 3010
	P-Group: Setpoints	**Units group:** 3_1	**Unit selection:** p0505
	Not for motor type: -	**Scaling:** p2000	**Expert list:** 1
	Min	**Max**	**Factory setting**
	-210000.000 [rpm]	210000.000 [rpm]	0.000 [rpm]

Description: Sets a value for the fixed speed / velocity setpoint 11.

Dependency: Refer to: p1020, p1021, p1022, p1023, r1024, r1197

Notice: A BICO interconnection to a parameter that belongs to a drive data set always acts on the effective data set.

p1012[0...n] CO: Fixed speed setpoint 12 / n_set_fixed 12

VECTOR_G	**Can be changed:** U, T	**Calculated:** -	**Access level:** 2
	Data type: FloatingPoint32	**Dynamic index:** DDS, p0180	**Func. diagram:** 3010
	P-Group: Setpoints	**Units group:** 3_1	**Unit selection:** p0505
	Not for motor type: -	**Scaling:** p2000	**Expert list:** 1
	Min	**Max**	**Factory setting**
	-210000.000 [rpm]	210000.000 [rpm]	0.000 [rpm]

Description: Sets a value for the fixed speed / velocity setpoint 12.

Dependency: Refer to: p1020, p1021, p1022, p1023, r1024, r1197

Notice: A BICO interconnection to a parameter that belongs to a drive data set always acts on the effective data set.

© Siemens AG 2012 All Rights Reserved

p1013[0...n] CO: Fixed speed setpoint 13 / n_set_fixed 13

VECTOR_G	**Can be changed:** U, T	**Calculated:** -	**Access level:** 2
	Data type: FloatingPoint32	**Dynamic index:** DDS, p0180	**Func. diagram:** 3010
	P-Group: Setpoints	**Units group:** 3_1	**Unit selection:** p0505
	Not for motor type: -	**Scaling:** p2000	**Expert list:** 1
	Min	**Max**	**Factory setting**
	-210000.000 [rpm]	210000.000 [rpm]	0.000 [rpm]

Description: Sets a value for the fixed speed / velocity setpoint 13.

Dependency: Refer to: p1020, p1021, p1022, p1023, r1024, r1197

Notice: A BICO interconnection to a parameter that belongs to a drive data set always acts on the effective data set.

p1014[0...n] CO: Fixed speed setpoint 14 / n_set_fixed 14

VECTOR_G	**Can be changed:** U, T	**Calculated:** -	**Access level:** 2
	Data type: FloatingPoint32	**Dynamic index:** DDS, p0180	**Func. diagram:** 3010
	P-Group: Setpoints	**Units group:** 3_1	**Unit selection:** p0505
	Not for motor type: -	**Scaling:** p2000	**Expert list:** 1
	Min	**Max**	**Factory setting**
	-210000.000 [rpm]	210000.000 [rpm]	0.000 [rpm]

Description: Sets a value for the fixed speed / velocity setpoint 14.

Dependency: Refer to: p1020, p1021, p1022, p1023, r1024, r1197

Notice: A BICO interconnection to a parameter that belongs to a drive data set always acts on the effective data set.

p1015[0...n] CO: Fixed speed setpoint 15 / n_set_fixed 15

VECTOR_G	**Can be changed:** U, T	**Calculated:** -	**Access level:** 2
	Data type: FloatingPoint32	**Dynamic index:** DDS, p0180	**Func. diagram:** 1021, 3010
	P-Group: Setpoints	**Units group:** 3_1	**Unit selection:** p0505
	Not for motor type: -	**Scaling:** p2000	**Expert list:** 1
	Min	**Max**	**Factory setting**
	-210000.000 [rpm]	210000.000 [rpm]	0.000 [rpm]

Description: Sets a value for the fixed speed / velocity setpoint 15.

Dependency: Refer to: p1020, p1021, p1022, p1023, r1024, r1197

Notice: A BICO interconnection to a parameter that belongs to a drive data set always acts on the effective data set.

p1020[0...n] BI: Fixed speed setpoint selection Bit 0 / n_set_fixed Bit 0

VECTOR_G	**Can be changed:** T	**Calculated:** -	**Access level:** 3
	Data type: Unsigned32 / Binary	**Dynamic index:** CDS, p0170	**Func. diagram:** 2505
	P-Group: Setpoints	**Units group:** -	**Unit selection:** -
	Not for motor type: -	**Scaling:** -	**Expert list:** 1
	Min	**Max**	**Factory setting**
	-	-	0

Description: Sets the signal source for selecting the fixed speed setpoint.

Dependency: Selects the required fixed speed setpoint using p1020 ... p1023.
Displays the number of the actual fixed speed setpoint in r1197.
Sets the values for the fixed speed setpoints 1 ... 15 using p1001 ... p1015.
Refer to: p1021, p1022, p1023, r1197

Note: If a fixed speed setpoint has not been selected (p1020 ... p1023 = 0, r1197 = 0), then r1024 = 0 (setpoint = 0).

© Siemens AG 2012 All Rights Reserved

p1021[0...n] BI: Fixed speed setpoint selection Bit 1 / n_set_fixed Bit 1

VECTOR_G	**Can be changed:** T	**Calculated:** -	**Access level:** 3
	Data type: Unsigned32 / Binary	**Dynamic index:** CDS, p0170	**Func. diagram:** 2505
	P-Group: Setpoints	**Units group:** -	**Unit selection:** -
	Not for motor type: -	**Scaling:** -	**Expert list:** 1
	Min	**Max**	**Factory setting**
	-	-	0

Description: Sets the signal source for selecting the fixed speed setpoint.

Dependency: Selects the required fixed speed setpoint using p1020 ... p1023.
Displays the number of the actual fixed speed setpoint in r1197.
Sets the values for the fixed speed setpoints 1 ... 15 using p1001 ... p1015.
Refer to: p1020, p1022, p1023, r1197

Note: If a fixed speed setpoint has not been selected (p1020 ... p1023 = 0, r1197 = 0), then r1024 = 0 (setpoint = 0).

p1022[0...n] BI: Fixed speed setpoint selection Bit 2 / n_set_fixed Bit 2

VECTOR_G	**Can be changed:** T	**Calculated:** -	**Access level:** 3
	Data type: Unsigned32 / Binary	**Dynamic index:** CDS, p0170	**Func. diagram:** 2505
	P-Group: Setpoints	**Units group:** -	**Unit selection:** -
	Not for motor type: -	**Scaling:** -	**Expert list:** 1
	Min	**Max**	**Factory setting**
	-	-	0

Description: Sets the signal source for selecting the fixed speed setpoint.

Dependency: Selects the required fixed speed setpoint using p1020 ... p1023.
Displays the number of the actual fixed speed setpoint in r1197.
Sets the values for the fixed speed setpoints 1 ... 15 using p1001 ... p1015.
Refer to: p1020, p1021, p1023, r1197

Note: If a fixed speed setpoint has not been selected (p1020 ... p1023 = 0, r1197 = 0), then r1024 = 0 (setpoint = 0).

p1023[0...n] BI: Fixed speed setpoint selection Bit 3 / n_set_fixed Bit 3

VECTOR_G	**Can be changed:** T	**Calculated:** -	**Access level:** 3
	Data type: Unsigned32 / Binary	**Dynamic index:** CDS, p0170	**Func. diagram:** 2505
	P-Group: Setpoints	**Units group:** -	**Unit selection:** -
	Not for motor type: -	**Scaling:** -	**Expert list:** 1
	Min	**Max**	**Factory setting**
	-	-	0

Description: Sets the signal source for selecting the fixed speed setpoint.

Dependency: Selects the required fixed speed setpoint using p1020 ... p1023.
Displays the number of the actual fixed speed setpoint in r1197.
Sets the values for the fixed speed setpoints 1 ... 15 using p1001 ... p1015.
Refer to: p1020, p1021, p1022, r1197

Note: If a fixed speed setpoint has not been selected (p1020 ... p1023 = 0, r1197 = 0), then r1024 = 0 (setpoint = 0).

r1024 CO: Fixed speed setpoint effective / n_set_fixed eff

VECTOR_G	**Can be changed:** -	**Calculated:** -	**Access level:** 3
	Data type: FloatingPoint32	**Dynamic index:** -	**Func. diagram:** 1550, 3010
	P-Group: Setpoints	**Units group:** 3_1	**Unit selection:** p0505
	Not for motor type: -	**Scaling:** p2000	**Expert list:** 1
	Min	**Max**	**Factory setting**
	- [rpm]	- [rpm]	- [rpm]

Description: Displays the selected and effective fixed speed setpoint.
This setpoint is the output value for the fixed speed setpoints and must be appropriately interconnected (e.g. with the main setpoint).

© Siemens AG 2012 All Rights Reserved

Recommend.: Interconnect the signal with main setpoint (p1070).

Dependency: Selects the required fixed speed setpoint using p1020 ... p1023.
Displays the number of the actual fixed speed setpoint in r1197.
Sets the values for the fixed speed setpoints 1 ... 15 using p1001 ... p1015.
Refer to: p1070, r1197

Note: If a fixed speed setpoint has not been selected (p1020 ... p1023 = 0, r1197 = 0), then r1024 = 0 (setpoint = 0).

p1030[0...n] Motorized potentiometer configuration / Mop configuration

VECTOR_G

Can be changed: U, T	**Calculated:** -	**Access level:** 3
Data type: Unsigned16	**Dynamic index:** DDS, p0180	**Func. diagram:** 3020
P-Group: Setpoints	**Units group:** -	**Unit selection:** -
Not for motor type: -	**Scaling:** -	**Expert list:** 1
Min	**Max**	**Factory setting**
-	-	0000 0110 bin

Description: Sets the configuration for the motorized potentiometer.

Bit field:

Bit	Signal name	1 signal	0 signal	FP
00	Data save active	Yes	No	-
01	Automatic mode, ramp-function generator active	Yes	No	-
02	Initial rounding-off active	Yes	No	-
03	Save in NVRAM active	Yes	No	-
04	Ramp-function generator always active	Yes	No	-

Notice: The following prerequisites must be fulfilled in order to be able to save the setpoint (Bit 03 = 1) in a non-volatile fashion:
- Firmware with V2.3 or higher.
- Control Unit 320 (CU320) with hardware version C or higher (module with NVRAM).

Note: Re bit 00:
0: The setpoint for the motorized potentiometer is not saved and after ON is entered using p1040.
1: The setpoint for the motorized potentiometer is saved after OFF and after ON set to the saved value. In order to save in a non-volatile fashion, bit 03 should be set to 1.
Re bit 01:
0: Without ramp-function generator in the automatic mode (ramp-up/ramp-down time = 0).
1: With ramp-function generator in the automatic mode.
For manual operation (0 signal via BI: p1041), the ramp-function generator is always active.
Re bit 02:
0: Without initial rounding-off
1: With initial rounding-off. The selected ramp-up/down time is correspondingly exceeded. The initial rounding-off is a sensitive way of specifying small changes (progressive reaction when keys are pressed).
The jerk for the initial rounding-off is independent of the ramp-up time and only depends on the selected maximum speed (p1082). It is calculated as follows:
r = 0.01 % * p1082 [1/s] / 0.13^2 [s^2]
The jerk acts up until the maximum acceleration is reached (a_max = p1082 [1/s] / p1047 [s]), and then the drive continues to run linearly with a constant rate of acceleration. The higher the maximum acceleration (the lower that p1047 is), the longer the ramp-up time increases with respect to the set ramp-up time.
Re bit 03:
0: Non-volatile data save de-activated.
1: The setpoint for the motorized potentiometer is saved in a non-volatile fashion (for bit 00 = 1).
Re bit 04:
When the bit is set, the ramp-function generator is computed independent of the pulse enable. The actual output value of the motorized potentiometer is always in r1050.

© Siemens AG 2012 All Rights Reserved

p1035[0...n] BI: Motorized potentiometer setpoint raise / Mop raise

VECTOR_G	**Can be changed:** T	**Calculated:** -	**Access level:** 3
	Data type: Unsigned32 / Binary	**Dynamic index:** CDS, p0170	**Func. diagram:** 2505, 3020
	P-Group: Setpoints	**Units group:** -	**Unit selection:** -
	Not for motor type: -	**Scaling:** -	**Expert list:** 1
	Min	**Max**	**Factory setting**
	-	-	0

Description: Sets the signal source to continually increase the setpoint for the motorized potentiometer.
The setpoint change (CO: r1050) depends on the set ramp-up time (p1047) and the duration of the signal that is present (BI: p1035).

Dependency: Refer to: p1036

Notice: The parameter may be protected as a result of p0922 or p2079 and cannot be changed.

p1036[0...n] BI: Motorized potentiometer lower setpoint / Mop lower

VECTOR_G	**Can be changed:** T	**Calculated:** -	**Access level:** 3
	Data type: Unsigned32 / Binary	**Dynamic index:** CDS, p0170	**Func. diagram:** 2505, 3020
	P-Group: Setpoints	**Units group:** -	**Unit selection:** -
	Not for motor type: -	**Scaling:** -	**Expert list:** 1
	Min	**Max**	**Factory setting**
	-	-	0

Description: Sets the signal source to continuously lower the setpoint for the motorized potentiometer.
The setpoint change (CO: r1050) depends on the set ramp-down time (p1048) and the duration of the signal that is present (BI: p1036).

Dependency: Refer to: p1035

Notice: The parameter may be protected as a result of p0922 or p2079 and cannot be changed.

p1037[0...n] Motorized potentiometer maximum speed / MotP n_max

VECTOR_G	**Can be changed:** U, T	**Calculated:** CALC_MOD_LIM_REF	**Access level:** 2
	Data type: FloatingPoint32	**Dynamic index:** DDS, p0180	**Func. diagram:** 3020
	P-Group: Setpoints	**Units group:** 3_1	**Unit selection:** p0505
	Not for motor type: -	**Scaling:** -	**Expert list:** 1
	Min	**Max**	**Factory setting**
	-210000.000 [rpm]	210000.000 [rpm]	0.000 [rpm]

Description: Sets the maximum speed/velocity for the motorized potentiometer.

Note: This parameter is automatically pre-assigned in the commissioning phase.
The setpoint output from the motorized potentiometer is limited to this value.

p1038[0...n] Motorized potentiometer minimum speed / MotP n_min

VECTOR_G	**Can be changed:** U, T	**Calculated:** CALC_MOD_LIM_REF	**Access level:** 2
	Data type: FloatingPoint32	**Dynamic index:** DDS, p0180	**Func. diagram:** 3020
	P-Group: Setpoints	**Units group:** 3_1	**Unit selection:** p0505
	Not for motor type: -	**Scaling:** -	**Expert list:** 1
	Min	**Max**	**Factory setting**
	-210000.000 [rpm]	210000.000 [rpm]	0.000 [rpm]

Description: Sets the minimum speed/velocity for the motorized potentiometer.

Note: This parameter is automatically pre-assigned in the commissioning phase.
The setpoint output from the motorized potentiometer is limited to this value.

© Siemens AG 2012 All Rights Reserved

p1039[0...n] BI: Motorized potentiometer inversion / MotP inv

VECTOR_G	**Can be changed:** T	**Calculated:** -	**Access level:** 3
	Data type: Unsigned32 / Binary	**Dynamic index:** CDS, p0170	**Func. diagram:** 3020
	P-Group: Setpoints	**Units group:** -	**Unit selection:** -
	Not for motor type: -	**Scaling:** -	**Expert list:** 1
	Min	**Max**	**Factory setting**
	-	-	0

Description: Sets the signal source to invert the minimum speed/velocity or the maximum speed/velocity for the motorized potentiometer.

Dependency: Refer to: p1037, p1038

Note: The inversion is only active during "motorized potentiometer raise" or "motorized potentiometer lower".

p1040[0...n] Motorized potentiometer starting value / Mop start value

VECTOR_G	**Can be changed:** U, T	**Calculated:** -	**Access level:** 2
	Data type: FloatingPoint32	**Dynamic index:** DDS, p0180	**Func. diagram:** 3020
	P-Group: Setpoints	**Units group:** 3_1	**Unit selection:** p0505
	Not for motor type: -	**Scaling:** -	**Expert list:** 1
	Min	**Max**	**Factory setting**
	-210000.000 [rpm]	210000.000 [rpm]	0.000 [rpm]

Description: Sets the starting value for the motorized potentiometer. This starting value becomes effective after the drive has been powered up.

Dependency: Only effective if p1030.0 = 0.
Refer to: p1030

p1041[0...n] BI: Motorized potentiometer manual/automatic / Mop manual/auto

VECTOR_G	**Can be changed:** T	**Calculated:** -	**Access level:** 3
	Data type: Unsigned32 / Binary	**Dynamic index:** CDS, p0170	**Func. diagram:** 3020
	P-Group: Setpoints	**Units group:** -	**Unit selection:** -
	Not for motor type: -	**Scaling:** -	**Expert list:** 1
	Min	**Max**	**Factory setting**
	-	-	0

Description: Sets the signal source to change over from manual to automatic when using a motorized potentiometer.
In the manual mode, the setpoint is changed using two signals - raise and lower. In the automatic mode, the setpoint must be interconnected via a connector input.

Dependency: Refer to: p1030, p1035, p1036, p1042

Note: The effectiveness of the internal ramp-function generator can be set in automatic mode.

p1042[0...n] CI: Motorized potentiometer automatic setpoint / Mop auto setpoint

VECTOR_G	**Can be changed:** T	**Calculated:** -	**Access level:** 3
	Data type: Unsigned32 / FloatingPoint32	**Dynamic index:** CDS, p0170	**Func. diagram:** 3020
	P-Group: Setpoints	**Units group:** -	**Unit selection:** -
	Not for motor type: -	**Scaling:** p2000	**Expert list:** 1
	Min	**Max**	**Factory setting**
	-	-	0

Description: Sets the signal source for the setpoint of the motorized potentiometer in the automatic mode.

Dependency: Refer to: p1041

© Siemens AG 2012 All Rights Reserved

p1043[0...n] BI: Motorized potentiometer accept setting value / MotP acc set val

VECTOR_G	**Can be changed:** T	**Calculated:** -	**Access level:** 3
	Data type: Unsigned32 / Binary	**Dynamic index:** CDS, p0170	**Func. diagram:** 3020
	P-Group: Setpoints	**Units group:** -	**Unit selection:** -
	Not for motor type: -	**Scaling:** -	**Expert list:** 1
	Min	**Max**	**Factory setting**
	-	-	0

Description: Sets the signal source to accept the setting value for the motorized potentiometer.

Dependency: Refer to: p1044

Note: The setting value (CI: p1044) becomes effective for a 0/1 edge of the setting command (BI: p1043).

p1044[0...n] CI: Motorized potentiometer setting value / Mop set val

VECTOR_G	**Can be changed:** T	**Calculated:** -	**Access level:** 3
	Data type: Unsigned32 / FloatingPoint32	**Dynamic index:** CDS, p0170	**Func. diagram:** 3020
	P-Group: Setpoints	**Units group:** -	**Unit selection:** -
	Not for motor type: -	**Scaling:** p2000	**Expert list:** 1
	Min	**Max**	**Factory setting**
	-	-	0

Description: Sets the signal source for the setting value for the motorized potentiometer.

Dependency: Refer to: p1043

Note: The setting value (CI: p1044) becomes effective for a 0/1 edge of the setting command (BI: p1043).

r1045 CO: Mot. potentiometer speed setp. in front of ramp-fct. gen. / Mop n_set bef RFG

VECTOR_G	**Can be changed:** -	**Calculated:** -	**Access level:** 3
	Data type: FloatingPoint32	**Dynamic index:** -	**Func. diagram:** 3020
	P-Group: Setpoints	**Units group:** 3_1	**Unit selection:** p0505
	Not for motor type: -	**Scaling:** p2000	**Expert list:** 1
	Min	**Max**	**Factory setting**
	- [rpm]	- [rpm]	- [rpm]

Description: Sets the effective setpoint in front of the internal motorized potentiometer ramp-function generator.

p1047[0...n] Motorized potentiometer ramp-up time / Mop ramp-up time

VECTOR_G	**Can be changed:** U, T	**Calculated:** -	**Access level:** 2
	Data type: FloatingPoint32	**Dynamic index:** DDS, p0180	**Func. diagram:** 3020
	P-Group: Setpoints	**Units group:** -	**Unit selection:** -
	Not for motor type: -	**Scaling:** -	**Expert list:** 1
	Min	**Max**	**Factory setting**
	0.000 [s]	1000.000 [s]	10.000 [s]

Description: Sets the ramp-up time for the internal ramp-function generator for the motorized potentiometer.

The setpoint is changed from zero up to the speed/velocity limit (p1082) within this time (if no initial rounding-off has been activated).

Dependency: Refer to: p1030, p1048, p1082

Note: When the initial rounding-off is activated (p1030.2) the ramp-up time is correspondingly extended.

© Siemens AG 2012 All Rights Reserved

p1048[0...n] Motorized potentiometer ramp-down time / Mop ramp-down time

VECTOR_G	**Can be changed:** U, T	**Calculated:** -	**Access level:** 2
	Data type: FloatingPoint32	**Dynamic index:** DDS, p0180	**Func. diagram:** 3020
	P-Group: Setpoints	**Units group:** -	**Unit selection:** -
	Not for motor type: -	**Scaling:** -	**Expert list:** 1
	Min	**Max**	**Factory setting**
	0.000 [s]	1000.000 [s]	10.000 [s]

Description: Sets the ramp-down time for the internal ramp-function generator for the motorized potentiometer.
The setpoint is changed from the speed/velocity limit (p1082) to zero within this time (if no initial rounding-off has been activated).

Dependency: Refer to: p1030, p1047, p1082

Note: The deceleration time is extended corresponding to the activated initial rounding-off (p1030.2).

r1050 CO: Motor. potentiometer setpoint after the ramp-function generator / Mop setp after RFG

VECTOR_G	**Can be changed:** -	**Calculated:** -	**Access level:** 3
	Data type: FloatingPoint32	**Dynamic index:** -	**Func. diagram:** 1550, 3020
	P-Group: Setpoints	**Units group:** 3_1	**Unit selection:** p0505
	Not for motor type: -	**Scaling:** p2000	**Expert list:** 1
	Min	**Max**	**Factory setting**
	- [rpm]	- [rpm]	- [rpm]

Description: Sets the effective setpoint after the internal motorized potentiometer ramp-function generator.
This setpoint is the output value of the motorized potentiometer and must be appropriately interconnected onwards (e.g. with the main setpoint).

Recommend.: Interconnect the signal with main setpoint (p1070).

Dependency: Refer to: p1070

Note: For "With ramp-function generator", after an OFF1, OFF2, OFF3 or for a 0 signal via BI: p0852 (inhibit operation, suppress pulses) the ramp-function generator output (r1050) is set to the starting value (configuration via p1030.0).

p1051[0...n] CI: Speed limit RFG positive direction of rotation / n_limit RFG pos

VECTOR_G	**Can be changed:** T	**Calculated:** -	**Access level:** 3
	Data type: Unsigned32 / FloatingPoint32	**Dynamic index:** CDS, p0170	**Func. diagram:** 3050
	P-Group: Setpoints	**Units group:** -	**Unit selection:** -
	Not for motor type: -	**Scaling:** p2000	**Expert list:** 1
	Min	**Max**	**Factory setting**
	-	-	1083[0]

Description: Sets the signal source for the speed limit of the positive direction on the ramp-function generator input.

p1052[0...n] CI: Speed limit RFG negative direction of rotation / n_limit RFG neg

VECTOR_G	**Can be changed:** T	**Calculated:** -	**Access level:** 3
	Data type: Unsigned32 / FloatingPoint32	**Dynamic index:** CDS, p0170	**Func. diagram:** 3050
	P-Group: Setpoints	**Units group:** -	**Unit selection:** -
	Not for motor type: -	**Scaling:** p2000	**Expert list:** 1
	Min	**Max**	**Factory setting**
	-	-	1086[0]

Description: Sets the signal source for the speed limit of the negative direction on the ramp-function generator input.

© Siemens AG 2012 All Rights Reserved

p1055[0...n] BI: Jog bit 0 / Jog bit 0

VECTOR_G	**Can be changed:** T	**Calculated:** -	**Access level:** 3
	Data type: Unsigned32 / Binary	**Dynamic index:** CDS, p0170	**Func. diagram:** 2501, 3030
	P-Group: Setpoints	**Units group:** -	**Unit selection:** -
	Not for motor type: -	**Scaling:** -	**Expert list:** 1
	Min	**Max**	**Factory setting**
	-	-	0

Description: Sets the signal source for jog 1.

Recommend.: When the setting for this binector input is changed, the motor can only be switched on by means of an appropriate signal change of the source.

Dependency: Refer to: p0840, p1058

Notice: The drive is enabled for jogging using BI: p1055 or BI: p1056.
The command "ON/OFF1" can be issued using BI: p0840 or using BI: p1055/p1056.
Only the signal source that was used to power up can also be used to power down again.

p1056[0...n] BI: Jog bit 1 / Jog bit 1

VECTOR_G	**Can be changed:** T	**Calculated:** -	**Access level:** 3
	Data type: Unsigned32 / Binary	**Dynamic index:** CDS, p0170	**Func. diagram:** 2501, 3030
	P-Group: Setpoints	**Units group:** -	**Unit selection:** -
	Not for motor type: -	**Scaling:** -	**Expert list:** 1
	Min	**Max**	**Factory setting**
	-	-	0

Description: Sets the signal source for jog 2.

Recommend.: When the setting for this binector input is changed, the motor can only be switched on by means of an appropriate signal change of the source.

Dependency: Refer to: p0840, p1059

Notice: The drive is enabled for jogging using BI: p1055 or BI: p1056.
The command "ON/OFF1" can be issued using BI: p0840 or using BI: p1055/p1056.
Only the signal source that was used to power up can also be used to power down again.

p1058[0...n] Jog 1 speed setpoint / Jog 1 n_set

VECTOR_G	**Can be changed:** T	**Calculated:** -	**Access level:** 2
	Data type: FloatingPoint32	**Dynamic index:** DDS, p0180	**Func. diagram:** 1550, 3030
	P-Group: Setpoints	**Units group:** 3_1	**Unit selection:** p0505
	Not for motor type: -	**Scaling:** -	**Expert list:** 1
	Min	**Max**	**Factory setting**
	-210000.000 [rpm]	210000.000 [rpm]	0.000 [rpm]

Description: Sets the speed/velocity for jog 1. Jogging is level-triggered and allows the motor to be incrementally moved.

Dependency: Refer to: p1055, p1056

p1059[0...n] Jog 2 speed setpoint / Jog 2 n_set

VECTOR_G	**Can be changed:** T	**Calculated:** -	**Access level:** 2
	Data type: FloatingPoint32	**Dynamic index:** DDS, p0180	**Func. diagram:** 1550, 3030
	P-Group: Setpoints	**Units group:** 3_1	**Unit selection:** p0505
	Not for motor type: -	**Scaling:** -	**Expert list:** 1
	Min	**Max**	**Factory setting**
	-210000.000 [rpm]	210000.000 [rpm]	0.000 [rpm]

Description: Sets the speed/velocity for jog 2. Jogging is level-triggered and allows the motor to be incrementally moved.

Dependency: Refer to: p1055, p1056

© Siemens AG 2012 All Rights Reserved

p1063[0...n] Speed limit setpoint channel / n_limit setp

VECTOR_G

Can be changed: U, T	**Calculated:** -	**Access level:** 1
Data type: FloatingPoint32	**Dynamic index:** DDS, p0180	**Func. diagram:** 3040
P-Group: Setpoints	**Units group:** 3_1	**Unit selection:** p0505
Not for motor type: -	**Scaling:** -	**Expert list:** 1
Min	**Max**	**Factory setting**
0.000 [rpm]	210000.000 [rpm]	40000.000 [rpm]

Description: Sets the speed limit/velocity limit effective in the setpoint channel.

Dependency: Refer to: p1082, p1083, p1085, p1086, p1088

p1070[0...n] CI: Main setpoint / Main setpoint

VECTOR_G

Can be changed: T	**Calculated:** -	**Access level:** 3
Data type: Unsigned32 / FloatingPoint32	**Dynamic index:** CDS, p0170	**Func. diagram:** 1550, 3030
P-Group: Setpoints	**Units group:** -	**Unit selection:** -
Not for motor type: -	**Scaling:** p2000	**Expert list:** 1
Min	**Max**	**Factory setting**
-	-	1024[0]

Description: Sets the signal source for the main setpoint.
Examples:
r1024: Fixed speed setpoint effective
r1050: Motor. potentiometer setpoint after the ramp-function generator

Dependency: Refer to: p1071, r1073, r1078

Notice: The parameter may be protected as a result of p0922 or p2079 and cannot be changed.

p1071[0...n] CI: Main setpoint scaling / Main setp scal

VECTOR_G

Can be changed: T	**Calculated:** -	**Access level:** 3
Data type: Unsigned32 / FloatingPoint32	**Dynamic index:** CDS, p0170	**Func. diagram:** 1550, 3030
P-Group: Setpoints	**Units group:** -	**Unit selection:** -
Not for motor type: -	**Scaling:** PERCENT	**Expert list:** 1
Min	**Max**	**Factory setting**
-	-	1

Description: Sets the signal source for scaling the main setpoint.

r1073 CO: Main setpoint effective / Main setpoint eff

VECTOR_G

Can be changed: -	**Calculated:** -	**Access level:** 3
Data type: FloatingPoint32	**Dynamic index:** -	**Func. diagram:** 3030
P-Group: Setpoints	**Units group:** 3_1	**Unit selection:** p0505
Not for motor type: -	**Scaling:** p2000	**Expert list:** 1
Min	**Max**	**Factory setting**
- [rpm]	- [rpm]	- [rpm]

Description: Displays the effective main setpoint.
The value shown is the main setpoint after scaling.

p1075[0...n] CI: Supplementary setpoint / Suppl setp

VECTOR_G

Can be changed: T	**Calculated:** -	**Access level:** 3
Data type: Unsigned32 / FloatingPoint32	**Dynamic index:** CDS, p0170	**Func. diagram:** 1550, 3030
P-Group: Setpoints	**Units group:** -	**Unit selection:** -
Not for motor type: -	**Scaling:** p2000	**Expert list:** 1
Min	**Max**	**Factory setting**
-	-	0

Description: Sets the signal source for the supplementary setpoint.

© Siemens AG 2012 All Rights Reserved

Dependency: Refer to: p1076, r1077, r1078

p1076[0...n] CI: Supplementary setpoint scaling / Suppl setp scal

VECTOR_G

Can be changed: T	**Calculated:** -	**Access level:** 3
Data type: Unsigned32 / FloatingPoint32	**Dynamic index:** CDS, p0170	**Func. diagram:** 1550, 3030
P-Group: Setpoints	**Units group:** -	**Unit selection:** -
Not for motor type: -	**Scaling:** PERCENT	**Expert list:** 1
Min	**Max**	**Factory setting**
-	-	1

Description: Sets the signal source for scaling the supplementary setpoint.

r1077 CO: Supplementary setpoint effective / Suppl setpoint eff

VECTOR_G

Can be changed: -	**Calculated:** -	**Access level:** 3
Data type: FloatingPoint32	**Dynamic index:** -	**Func. diagram:** 3030
P-Group: Setpoints	**Units group:** 3_1	**Unit selection:** p0505
Not for motor type: -	**Scaling:** p2000	**Expert list:** 1
Min	**Max**	**Factory setting**
- [rpm]	- [rpm]	- [rpm]

Description: Displays the effective supplementary setpoint. The value shown is the additional setpoint after scaling.

r1078 CO: Total setpoint effective / Total setpoint eff

VECTOR_G

Can be changed: -	**Calculated:** -	**Access level:** 3
Data type: FloatingPoint32	**Dynamic index:** -	**Func. diagram:** 3030
P-Group: Setpoints	**Units group:** 3_1	**Unit selection:** p0505
Not for motor type: -	**Scaling:** p2000	**Expert list:** 1
Min	**Max**	**Factory setting**
- [rpm]	- [rpm]	- [rpm]

Description: Displays the total effective setpoint.
The value indicates the sum of the effective main setpoint and supplementary setpoint.

p1080[0...n] Minimum speed / n_min

VECTOR_G

Can be changed: C2(1), T	**Calculated:** -	**Access level:** 1
Data type: FloatingPoint32	**Dynamic index:** DDS, p0180	**Func. diagram:** 3050
P-Group: Setpoints	**Units group:** 3_1	**Unit selection:** p0505
Not for motor type: -	**Scaling:** -	**Expert list:** 1
Min	**Max**	**Factory setting**
0.000 [rpm]	19500.000 [rpm]	0.000 [rpm]

Description: Sets the lowest possible motor speed.
This value is not undershot in operation.

Dependency: Refer to: p1106

Notice: The effective minimum speed is formed from p1080 and p1106.

Note: The parameter value applies for both motor directions.
In exceptional cases, the motor can operate below this value (e.g. when reversing).

© Siemens AG 2012 All Rights Reserved

p1082[0...n] Maximum speed / n_max

VECTOR_G

Can be changed: C2(1), T	**Calculated:** CALC_MOD_ALL	**Access level:** 1
Data type: FloatingPoint32	**Dynamic index:** DDS, p0180	**Func. diagram:** 3020, 3050, 3060, 3070, 3095, 5300
P-Group: Setpoints	**Units group:** 3_1	**Unit selection:** p0505
Not for motor type: -	**Scaling:** -	**Expert list:** 1
Min 0.000 [rpm]	**Max** 210000.000 [rpm]	**Factory setting** 1500.000 [rpm]

Description: Sets the highest possible speed.

Dependency: For vector control (p1300 = 20 ... 23) the maximum speed is limited to 60.0 / (8.333 * p0115[0] * r0313). This can be identified by a reduction in r1084. p1082 is not changed in this process due to the fact that the operating mode p1300 can be changed over.

If a sine-wave filter (p0230 = 3) is parameterized as output filter, then the maximum speed is limited corresponding to the maximum permissible filter output frequency (refer to the filter data sheet). When using sine-wave filters (p0230 = 3, 4), the maximum speed r1084 is limited to 70% of the resonant frequency of the filter capacitance and the motor leakage inductance.

For reactors and dU/dt filters, it is limited to 150 Hz * 60 / r0313 (for chassis power units) or 120 Hz * 60 / r0313 (for booksize power units).

Refer to: p0115, p0230, r0313, p0322, p0324, r0336, p0532

Notice: After the value has been modified, no further parameter modifications can be made and the status is shown in r3996. Modifications can be made again when r3996 = 0.

Note: The parameter applies for both motor directions.

The parameter has a limiting effect and is the reference quantity for all ramp-up and ramp-down times (e.g. down ramps, ramp-function generator, motor potentiometer).

Since the parameter is part of quick commissioning (p0010 = 1), it is defined appropriately when p0310, p0311, p0322, p0324, p0530, p0531, and p0532 are changed.

The following limits are always effective for p1082:

p1082 <= min(p0324, p0532) if p0324 > 0 and p0532 > 0

p1082 <= p0322 if p0324 = 0 or p0532 = 0 and p0322 > 0

p1082 <= 60 * Minimum (15 * r0336, 650 Hz) / r0313

p1082 <= 60 * Maximum power unit pulse frequency / (k * r0313)

k = 12 for vector control (r0108.2 = 1), k = 6.5 for U/f control (r0108.2 = 0)

For the automatic calculation (p0340 = 1) the value of the parameter is pre-assigned the maximum motor speed (p0322). If p0322 = 0, the rated motor speed (p0311) is used as default (pre-assignment) value. For induction motors that are not catalog motors (p0301 = 0), the synchronous no-load speed is used as default (pre-assignment) value (p0310 * 60 / r0313).

For synchronous motors, the following additionally applies:

The maximum speed p1082 is restricted to speeds (r1084) where the EMF does not exceed the DC link voltage.

The effective assignment of the motor data set parameter (e.g. p0311) to the drive data set parameter p1082 when pre-assigning should be taken from p0186.

p1082 is also available in the quick commissioning (p0010 = 1); this means that when exiting via p3900 > 0, the value is not changed.

p1083[0...n] CO: Speed limit in positive direction of rotation / n_limit pos

VECTOR_G

Can be changed: U, T	**Calculated:** -	**Access level:** 2
Data type: FloatingPoint32	**Dynamic index:** DDS, p0180	**Func. diagram:** 3050, 6732
P-Group: Setpoints	**Units group:** 3_1	**Unit selection:** p0505
Not for motor type: -	**Scaling:** p2000	**Expert list:** 1
Min 0.000 [rpm]	**Max** 210000.000 [rpm]	**Factory setting** 40000.000 [rpm]

Description: Sets the maximum speed for the positive direction.

Notice: A BICO interconnection to a parameter that belongs to a drive data set always acts on the effective data set.

© Siemens AG 2012 All Rights Reserved

r1084 CO: Speed limit positive effective / n_limit pos eff

VECTOR_G

Can be changed: -	**Calculated:** -	**Access level:** 3
Data type: FloatingPoint32	**Dynamic index:** -	**Func. diagram:** 3050, 3095
P-Group: Setpoints	**Units group:** 3_1	**Unit selection:** p0505
Not for motor type: -	**Scaling:** p2000	**Expert list:** 1
Min - [rpm]	**Max** - [rpm]	**Factory setting** - [rpm]

Description: Displays the effective positive speed limit.

Dependency: Refer to: p1082, p1083, p1085

p1085[0...n] CI: Speed limit in positive direction of rotation / n_limit pos

VECTOR_G

Can be changed: T	**Calculated:** -	**Access level:** 3
Data type: Unsigned32 / FloatingPoint32	**Dynamic index:** CDS, p0170	**Func. diagram:** 3050
P-Group: Setpoints	**Units group:** -	**Unit selection:** -
Not for motor type: -	**Scaling:** p2000	**Expert list:** 1
Min -	**Max** -	**Factory setting** 1083[0]

Description: Sets the signal source for the speed limit of the positive direction.

p1086[0...n] CO: Speed limit in negative direction of rotation / n_limit neg

VECTOR_G

Can be changed: U, T	**Calculated:** -	**Access level:** 2
Data type: FloatingPoint32	**Dynamic index:** DDS, p0180	**Func. diagram:** 3050
P-Group: Setpoints	**Units group:** 3_1	**Unit selection:** p0505
Not for motor type: -	**Scaling:** p2000	**Expert list:** 1
Min -210000.000 [rpm]	**Max** 0.000 [rpm]	**Factory setting** -40000.000 [rpm]

Description: Sets the speed limit for the negative direction.

Notice: A BICO interconnection to a parameter that belongs to a drive data set always acts on the effective data set.

r1087 CO: Speed limit negative effective / n_limit neg eff

VECTOR_G

Can be changed: -	**Calculated:** -	**Access level:** 3
Data type: FloatingPoint32	**Dynamic index:** -	**Func. diagram:** 3050, 3095
P-Group: Setpoints	**Units group:** 3_1	**Unit selection:** p0505
Not for motor type: -	**Scaling:** p2000	**Expert list:** 1
Min - [rpm]	**Max** - [rpm]	**Factory setting** - [rpm]

Description: Displays the effective negative speed limit.

Dependency: Refer to: p1082, p1086, p1088

p1088[0...n] CI: Speed limit in negative direction of rotation / n_limit neg

VECTOR_G

Can be changed: T	**Calculated:** -	**Access level:** 3
Data type: Unsigned32 / FloatingPoint32	**Dynamic index:** CDS, p0170	**Func. diagram:** 3050
P-Group: Setpoints	**Units group:** -	**Unit selection:** -
Not for motor type: -	**Scaling:** p2000	**Expert list:** 1
Min -	**Max** -	**Factory setting** 1086[0]

Description: Sets the signal source for the speed/velocity limit of the negative direction.

© Siemens AG 2012 All Rights Reserved

p1091[0...n] Skip speed 1 / n_skip 1

VECTOR_G	**Can be changed:** U, T	**Calculated:** -	**Access level:** 3
	Data type: FloatingPoint32	**Dynamic index:** DDS, p0180	**Func. diagram:** 3050
	P-Group: Setpoints	**Units group:** 3_1	**Unit selection:** p0505
	Not for motor type: -	**Scaling:** p2000	**Expert list:** 1
	Min	**Max**	**Factory setting**
	0.000 [rpm]	210000.000 [rpm]	0.000 [rpm]

Description: Sets skip speed 1.
Dependency: Refer to: p1092, p1093, p1094, p1101
Notice: Skip bandwidths can also become ineffective as a result of the downstream limits in the setpoint channel.
Note: The skip (suppression) speeds can be used to prevent the effects of mechanical resonance.

p1092[0...n] Skip speed 2 / n_skip 2

VECTOR_G	**Can be changed:** U, T	**Calculated:** -	**Access level:** 3
	Data type: FloatingPoint32	**Dynamic index:** DDS, p0180	**Func. diagram:** 3050
	P-Group: Setpoints	**Units group:** 3_1	**Unit selection:** p0505
	Not for motor type: -	**Scaling:** p2000	**Expert list:** 1
	Min	**Max**	**Factory setting**
	0.000 [rpm]	210000.000 [rpm]	0.000 [rpm]

Description: Sets skip speed 2.
Dependency: Refer to: p1091, p1093, p1094, p1101
Notice: Skip bandwidths can also become ineffective as a result of the downstream limits in the setpoint channel.

p1093[0...n] Skip speed 3 / n_skip 3

VECTOR_G	**Can be changed:** U, T	**Calculated:** -	**Access level:** 3
	Data type: FloatingPoint32	**Dynamic index:** DDS, p0180	**Func. diagram:** 3050
	P-Group: Setpoints	**Units group:** 3_1	**Unit selection:** p0505
	Not for motor type: -	**Scaling:** p2000	**Expert list:** 1
	Min	**Max**	**Factory setting**
	0.000 [rpm]	210000.000 [rpm]	0.000 [rpm]

Description: Sets skip speed 3.
Dependency: Refer to: p1091, p1092, p1094, p1101
Notice: Skip bandwidths can also become ineffective as a result of the downstream limits in the setpoint channel.

p1094[0...n] Skip speed 4 / n_skip 4

VECTOR_G	**Can be changed:** U, T	**Calculated:** -	**Access level:** 3
	Data type: FloatingPoint32	**Dynamic index:** DDS, p0180	**Func. diagram:** 3050
	P-Group: Setpoints	**Units group:** 3_1	**Unit selection:** p0505
	Not for motor type: -	**Scaling:** p2000	**Expert list:** 1
	Min	**Max**	**Factory setting**
	0.000 [rpm]	210000.000 [rpm]	0.000 [rpm]

Description: Sets skip speed 4.
Dependency: Refer to: p1091, p1092, p1093, p1101
Notice: Skip bandwidths can also become ineffective as a result of the downstream limits in the setpoint channel.

© Siemens AG 2012 All Rights Reserved

p1101[0...n] Skip speed bandwidth / n_skip bandwidth

VECTOR_G	**Can be changed:** U, T	**Calculated:** -	**Access level:** 3
	Data type: FloatingPoint32	**Dynamic index:** DDS, p0180	**Func. diagram:** 3050
	P-Group: Setpoints	**Units group:** 3_1	**Unit selection:** p0505
	Not for motor type: -	**Scaling:** p2000	**Expert list:** 1
	Min	**Max**	**Factory setting**
	0.000 [rpm]	210000.000 [rpm]	0.000 [rpm]

Description: Sets the bandwidth for the skip speeds/velocities 1 to 4.

Dependency: Refer to: p1091, p1092, p1093, p1094

Note: The setpoint (reference) speeds are skipped (suppressed) in the range of the skip speed +/-p1101.

Steady-state operation is not possible in the skipped (suppressed) speed range. The skip (suppression) range is skipped.

Example:

p1091 = 600 and p1101 = 20

--> setpoint speeds between 580 and 620 [rpm] are skipped.

For the skip bandwidths, the following hysteresis behavior applies:

For a setpoint speed coming from below, the following applies:

r1170 < 580 [rpm] and 580 [rpm] <= r1114 <= 620 [rpm] --> r1119 = 580 [rpm]

For a setpoint speed coming from above, the following applies:

r1170 > 620 [rpm] and 580 [rpm] <= r1114 <= 620 [rpm] --> r1119 = 620 [rpm]

p1106[0...n] CI: Minimum speed signal source / n_min s_src

VECTOR_G	**Can be changed:** T	**Calculated:** -	**Access level:** 3
	Data type: Unsigned32 / FloatingPoint32	**Dynamic index:** CDS, p0170	**Func. diagram:** 3050
	P-Group: Setpoints	**Units group:** -	**Unit selection:** -
	Not for motor type: -	**Scaling:** p2000	**Expert list:** 1
	Min	**Max**	**Factory setting**
	-	-	0

Description: Sets the signal source for lowest possible motor speed.

Dependency: Refer to: p1080

Notice: The effective minimum speed is formed from p1080 and p1106.

p1110[0...n] BI: Inhibit negative direction / Inhib neg dir

VECTOR_G	**Can be changed:** T	**Calculated:** -	**Access level:** 3
	Data type: Unsigned32 / Binary	**Dynamic index:** CDS, p0170	**Func. diagram:** 2505, 3040
	P-Group: Setpoints	**Units group:** -	**Unit selection:** -
	Not for motor type: -	**Scaling:** -	**Expert list:** 1
	Min	**Max**	**Factory setting**
	-	-	0

Description: Sets the signal source to disable the negative direction.

Dependency: Refer to: p1111

p1111[0...n] BI: Inhibit positive direction / Inhib pos dir

VECTOR_G	**Can be changed:** T	**Calculated:** -	**Access level:** 3
	Data type: Unsigned32 / Binary	**Dynamic index:** CDS, p0170	**Func. diagram:** 2505, 3040
	P-Group: Setpoints	**Units group:** -	**Unit selection:** -
	Not for motor type: -	**Scaling:** -	**Expert list:** 1
	Min	**Max**	**Factory setting**
	-	-	0

Description: Sets the signal source to disable the positive direction.

Dependency: Refer to: p1110

© Siemens AG 2012 All Rights Reserved

r1112 CO: Speed setpoint after minimum limiting / n_set aft min_lim

VECTOR_G	**Can be changed:** -	**Calculated:** -	**Access level:** 3
	Data type: FloatingPoint32	**Dynamic index:** -	**Func. diagram:** 3050
	P-Group: Setpoints	**Units group:** 3_1	**Unit selection:** p0505
	Not for motor type: -	**Scaling:** p2000	**Expert list:** 1
	Min - [rpm]	**Max** - [rpm]	**Factory setting** - [rpm]

Description: Displays the speed setpoint after the minimum limiting.

Dependency: Refer to: p1091, p1092, p1093, p1094, p1101

p1113[0...n] BI: Setpoint inversion / Setp inv

VECTOR_G	**Can be changed:** T	**Calculated:** -	**Access level:** 3
	Data type: Unsigned32 / Binary	**Dynamic index:** CDS, p0170	**Func. diagram:** 2441, 2442, 2505, 3040
	P-Group: Setpoints	**Units group:** -	**Unit selection:** -
	Not for motor type: -	**Scaling:** -	**Expert list:** 1
	Min -	**Max** -	**Factory setting** 0

Description: Sets the signal source to invert the setpoint.

Dependency: Refer to: r1198

Notice: The parameter may be protected as a result of p0922 or p2079 and cannot be changed.

r1114 CO: Setpoint after the direction limiting / Setp after limit

VECTOR_G	**Can be changed:** -	**Calculated:** -	**Access level:** 3
	Data type: FloatingPoint32	**Dynamic index:** -	**Func. diagram:** 1550, 3040, 3050
	P-Group: Setpoints	**Units group:** 3_1	**Unit selection:** p0505
	Not for motor type: -	**Scaling:** p2000	**Expert list:** 1
	Min - [rpm]	**Max** - [rpm]	**Factory setting** - [rpm]

Description: Displays the speed/velocity setpoint after the changeover and limiting the direction.

p1115 Ramp-function generator selection / RFG selection

VECTOR_G	**Can be changed:** T	**Calculated:** -	**Access level:** 3
	Data type: Integer16	**Dynamic index:** -	**Func. diagram:** 1550, 3080
	P-Group: Setpoints	**Units group:** -	**Unit selection:** -
	Not for motor type: -	**Scaling:** -	**Expert list:** 1
	Min 0	**Max** 1	**Factory setting** 0

Description: Sets the ramp-function generator type.

Value:
0: Basic ramp-function generator
1: Extended ramp-function generator

Note: Another ramp-function generator type can only be selected when the motor is at a standstill.

© Siemens AG 2012 All Rights Reserved

r1119 CO: Ramp-function generator setpoint at the input / RFG setp at inp

VECTOR_G	**Can be changed:** -	**Calculated:** -	**Access level:** 3
	Data type: FloatingPoint32	**Dynamic index:** -	**Func. diagram:** 1550, 1690, 3050, 3060, 3070
	P-Group: Setpoints	**Units group:** 3_1	**Unit selection:** p0505
	Not for motor type: -	**Scaling:** p2000	**Expert list:** 1
	Min - [rpm]	**Max** - [rpm]	**Factory setting** - [rpm]

Description: Displays the setpoint at the input of the ramp-function generator.

Notice: The parameter may be protected as a result of p0922 or p2079 and cannot be changed.

Note: The setpoint is influenced by other functions, e.g. skip (suppressed) speeds, minimum and maximum limits.

p1120[0...n] Ramp-function generator ramp-up time / RFG ramp-up time

VECTOR_G	**Can be changed:** C2(1), U, T	**Calculated:** -	**Access level:** 1
	Data type: FloatingPoint32	**Dynamic index:** DDS, p0180	**Func. diagram:** 3060, 3070
	P-Group: Setpoints	**Units group:** -	**Unit selection:** -
	Not for motor type: -	**Scaling:** -	**Expert list:** 1
	Min 0.000 [s]	**Max** 999999.000 [s]	**Factory setting** 10.000 [s]

Description: The ramp-function generator ramps-up the speed setpoint from standstill (setpoint = 0) up to the maximum speed (p1082) in this time.

Dependency: Refer to: p1082, p1138

Note: The ramp-up time can be scaled via connector input p1138.

The parameter is adapted during the rotating measurement (p1960 > 0). This is the reason that during the rotating measurement, the motor can accelerate faster than was originally parameterized.

For U/f control and sensorless vector control (see p1300), ramp-up times of 0 s are not expedient. The setting should be based on the startup times (r0345) of the motor.

p1121[0...n] Ramp-function generator ramp-down time / RFG ramp-down time

VECTOR_G	**Can be changed:** C2(1), U, T	**Calculated:** -	**Access level:** 1
	Data type: FloatingPoint32	**Dynamic index:** DDS, p0180	**Func. diagram:** 3060, 3070
	P-Group: Setpoints	**Units group:** -	**Unit selection:** -
	Not for motor type: -	**Scaling:** -	**Expert list:** 1
	Min 0.000 [s]	**Max** 999999.000 [s]	**Factory setting** 10.000 [s]

Description: The ramp-function generator ramps-down the speed setpoint from the maximum speed (p1082) down to standstill (setpoint = 0) in this time.

Further, the ramp-down time is always effective for OFF1.

Dependency: Refer to: p1082, p1139

Note: For U/f control and sensorless vector control (see p1300), ramp-down times of 0 s are not recommended. The setting should be based on the startup times (r0345) of the motor.

p1122[0...n] BI: Bypass ramp-function generator / Bypass RFG

VECTOR_G	**Can be changed:** U, T	**Calculated:** -	**Access level:** 3
	Data type: Unsigned32 / Binary	**Dynamic index:** CDS, p0170	**Func. diagram:** 2505
	P-Group: Setpoints	**Units group:** -	**Unit selection:** -
	Not for motor type: -	**Scaling:** -	**Expert list:** 1
	Min -	**Max** -	**Factory setting** 0

Description: Sets the signal source for bypassing the ramp generator (ramp-up and ramp-down times = 0).

Notice: The parameter may be protected as a result of p0922 or p2079 and cannot be changed.

Note: For VECTOR in encoderless operation, it is not permissible that the ramp-function generator is bypassed.

© Siemens AG 2012 All Rights Reserved

p1130[0...n] Ramp-function generator initial rounding-off time / RFG t_start_round

VECTOR_G	**Can be changed:** U, T	**Calculated:** -	**Access level:** 2
	Data type: FloatingPoint32	**Dynamic index:** DDS, p0180	**Func. diagram:** 3070
	P-Group: Setpoints	**Units group:** -	**Unit selection:** -
	Not for motor type: -	**Scaling:** -	**Expert list:** 1
	Min	**Max**	**Factory setting**
	0.000 [s]	30.000 [s]	0.000 [s]

Description: Sets the initial rounding-off time for the extended ramp generator. The value applies to ramp-up and ramp-down.

Note: Rounding-off times avoid an abrupt response and prevent damage to the mechanical system.

p1131[0...n] Ramp-function generator final rounding-off time / RFG t_end_delay

VECTOR_G	**Can be changed:** U, T	**Calculated:** -	**Access level:** 2
	Data type: FloatingPoint32	**Dynamic index:** DDS, p0180	**Func. diagram:** 3070
	P-Group: Setpoints	**Units group:** -	**Unit selection:** -
	Not for motor type: -	**Scaling:** -	**Expert list:** 1
	Min	**Max**	**Factory setting**
	0.000 [s]	30.000 [s]	0.000 [s]

Description: Sets the final rounding-off time for the extended ramp generator. The value applies to ramp-up and ramp-down.

Note: Rounding-off times avoid an abrupt response and prevent damage to the mechanical system.

p1134[0...n] Ramp-function generator rounding-off type / RFG round-off type

VECTOR_G	**Can be changed:** U, T	**Calculated:** -	**Access level:** 2
	Data type: Integer16	**Dynamic index:** DDS, p0180	**Func. diagram:** 3070
	P-Group: Setpoints	**Units group:** -	**Unit selection:** -
	Not for motor type: -	**Scaling:** -	**Expert list:** 1
	Min	**Max**	**Factory setting**
	0	1	0

Description: Sets the smoothed response to the OFF1 command or the reduced setpoint for the extended ramp-function generator.

Value:
0: Cont. smoothing
1: Discont smoothing

Dependency: No effect up to initial rounding-off time (p1130) > 0 s.

Note: p1134 = 0 (continuous smoothing)

If the setpoint is reduced while ramping-up, initially a final rounding-off is carried out and then the ramp-up completed. During the final rounding-off, the output of the ramp-function generator continues to go in the direction of the previous setpoint (overshoot). After the final rounding-off has been completed, the output goes toward the new setpoint.

p1134 = 1 (discontinuous smoothing)

If the setpoint is reduced while ramping-up, then the output goes immediately in the direction of the new setpoint. For the setpoint change there is no rounding-off.

p1135[0...n] OFF3 ramp-down time / OFF3 t_RD

VECTOR_G	**Can be changed:** C2(1), U, T	**Calculated:** -	**Access level:** 2
	Data type: FloatingPoint32	**Dynamic index:** DDS, p0180	**Func. diagram:** 3060, 3070
	P-Group: Setpoints	**Units group:** -	**Unit selection:** -
	Not for motor type: -	**Scaling:** -	**Expert list:** 1
	Min	**Max**	**Factory setting**
	0.000 [s]	600.000 [s]	3.000 [s]

Description: Sets the ramp-down time from the maximum speed down to zero speed for the OFF3 command.

Note: This time can be exceeded if the DC link voltage reaches its maximum value.

© Siemens AG 2012 All Rights Reserved

p1136[0...n] OFF3 initial rounding-off time / RFGOFF3 t_strt_rnd

VECTOR_G	**Can be changed:** U, T	**Calculated:** -	**Access level:** 2
	Data type: FloatingPoint32	**Dynamic index:** DDS, p0180	**Func. diagram:** 3070
	P-Group: Setpoints	**Units group:** -	**Unit selection:** -
	Not for motor type: -	**Scaling:** -	**Expert list:** 1
	Min	**Max**	**Factory setting**
	0.000 [s]	30.000 [s]	0.000 [s]

Description: Sets the initial rounding-off time for OFF3 for the extended ramp generator.

p1137[0...n] OFF3 final rounding-off time / RFG OFF3 t_end_del

VECTOR_G	**Can be changed:** U, T	**Calculated:** -	**Access level:** 2
	Data type: FloatingPoint32	**Dynamic index:** DDS, p0180	**Func. diagram:** 3070
	P-Group: Setpoints	**Units group:** -	**Unit selection:** -
	Not for motor type: -	**Scaling:** -	**Expert list:** 1
	Min	**Max**	**Factory setting**
	0.000 [s]	30.000 [s]	0.000 [s]

Description: Sets the final rounding-off time for OFF3 for the extended ramp generator.

p1138[0...n] CI: Up ramp scaling / Up ramp scaling

VECTOR_G	**Can be changed:** T	**Calculated:** -	**Access level:** 3
	Data type: Unsigned32 / FloatingPoint32	**Dynamic index:** CDS, p0170	**Func. diagram:** 3060, 3070
	P-Group: Setpoints	**Units group:** -	**Unit selection:** -
	Not for motor type: -	**Scaling:** PERCENT	**Expert list:** 1
	Min	**Max**	**Factory setting**
	-	-	1

Description: Sets the signal source for scaling the up ramp.

Dependency: Refer to: p1120

Note: The ramp-up time is set in p1120.

p1139[0...n] CI: Down ramp scaling / Down ramp scaling

VECTOR_G	**Can be changed:** T	**Calculated:** -	**Access level:** 3
	Data type: Unsigned32 / FloatingPoint32	**Dynamic index:** CDS, p0170	**Func. diagram:** 3060, 3070
	P-Group: Setpoints	**Units group:** -	**Unit selection:** -
	Not for motor type: -	**Scaling:** PERCENT	**Expert list:** 1
	Min	**Max**	**Factory setting**
	-	-	1

Description: Sets the signal source for scaling the down ramp.

Dependency: Refer to: p1121

Note: The ramp-down time is set in p1121.

p1140[0...n] BI: Enable ramp-function generator/inhibit ramp-function generator / RFG enable

VECTOR_G	**Can be changed:** T	**Calculated:** -	**Access level:** 3
	Data type: Unsigned32 / Binary	**Dynamic index:** CDS, p0170	**Func. diagram:** 2501
	P-Group: Setpoints	**Units group:** -	**Unit selection:** -
	Not for motor type: -	**Scaling:** -	**Expert list:** 1
	Min	**Max**	**Factory setting**
	-	-	1

Description: Sets the signal source for the command "enable ramp-function generator/inhibit ramp-function generator".
For the PROFIdrive profile, this command corresponds to control word 1 bit 4 (STW1.4).
BI: p1140 = 0 signal:
Inhibits the ramp-function generator (the ramp-function generator output is set to zero).

© Siemens AG 2012 All Rights Reserved

BI: p1140 = 1 signal:
Ramp-function generator enable.

Dependency: Refer to: p1141, p1142

Caution: When "master control from PC" is activated, this binector input is ineffective.

Notice: The parameter may be protected as a result of p0922 or p2079 and cannot be changed.

p1141[0...n] BI: Continue ramp-function generator/freeze ramp-function generator / Continue RFG

VECTOR_G

Can be changed: T	**Calculated:** -	**Access level:** 3
Data type: Unsigned32 / Binary	**Dynamic index:** CDS, p0170	**Func. diagram:** 2501
P-Group: Setpoints	**Units group:** -	**Unit selection:** -
Not for motor type: -	**Scaling:** -	**Expert list:** 1
Min	**Max**	**Factory setting**
-	-	1

Description: Sets the signal source for the command "continue ramp-function generator/freeze ramp-function generator".
For the PROFIdrive profile, this command corresponds to control word 1 bit 5 (STW1.5).
BI: p1141 = 0 signal:
Freezes the ramp-function generator.
BI: p1141 = 1 signal:
Continue ramp-function generator.

Dependency: Refer to: p1140, p1142

Caution: When "master control from PC" is activated, this binector input is ineffective.

Notice: The ramp-function generator is, independent of the state of the signal source, active in the following cases:
- OFF1/OFF3.
- ramp-function generator output within the suppression bandwidth.
- ramp-function generator output below the minimum speed.

p1142[0...n] BI: Enable setpoint/inhibit setpoint / Setpoint enable

VECTOR_G

Can be changed: T	**Calculated:** -	**Access level:** 3
Data type: Unsigned32 / Binary	**Dynamic index:** CDS, p0170	**Func. diagram:** 2501
P-Group: Setpoints	**Units group:** -	**Unit selection:** -
Not for motor type: -	**Scaling:** -	**Expert list:** 1
Min	**Max**	**Factory setting**
-	-	1

Description: Sets the signal source for the command "enable setpoint/inhibit setpoint".
For the PROFIdrive profile, this command corresponds to control word 1 bit 6 (STW1.6).
BI: p1142 = 0 signal
Inhibits the setpoint (the ramp-function generator input is set to zero).
BI: p1142 = 1 signal
Setpoint enable.

Dependency: Refer to: p1140, p1141

Caution: When "master control from PC" is activated, this binector input is ineffective.

Notice: The parameter may be protected as a result of p0922 or p2079 and cannot be changed.

Note: When the function module "position control" (r0108.3 = 1) is activated, this binector input is interconnected as follows as standard:
BI: p1142 = 0 signal

© Siemens AG 2012 All Rights Reserved

p1143[0...n] BI: Ramp-function generator, accept setting value / RFG accept set v

VECTOR_G	**Can be changed:** T	**Calculated:** -	**Access level:** 3
	Data type: Unsigned32 / Binary	**Dynamic index:** CDS, p0170	**Func. diagram:** 3060, 3070
	P-Group: Setpoints	**Units group:** -	**Unit selection:** -
	Not for motor type: -	**Scaling:** -	**Expert list:** 1
	Min	**Max**	**Factory setting**
	-	-	0

Description: Sets the signal source for accepting the setting value of the ramp-function generator.

Dependency: The signal source for the ramp-function generator setting value is set using parameters.

Refer to: p1144

Note: 0/1 signal:

The ramp-function generator output is immediately (without delay) set to the setting value of the ramp-function generator.

1 signal:

The setting value of the ramp-function generator is effective.

1/0 signal:

The input value of the ramp-function generator is effective. The ramp-function generator output is adapted to the input value using the ramp-up time or the ramp-down time.

0 signal:

The input value of the ramp-function generator is effective.

p1144[0...n] CI: Ramp-function generator setting value / RFG setting value

VECTOR_G	**Can be changed:** U, T	**Calculated:** -	**Access level:** 3
	Data type: Unsigned32 / FloatingPoint32	**Dynamic index:** CDS, p0170	**Func. diagram:** 3060, 3070
	P-Group: Setpoints	**Units group:** -	**Unit selection:** -
	Not for motor type: -	**Scaling:** p2000	**Expert list:** 1
	Min	**Max**	**Factory setting**
	-	-	0

Description: Sets the signal source for the ramp-function generator setting value.

Dependency: The signal source for accepting the setting value is set using parameters.

Refer to: p1143

p1145[0...n] Ramp-function generator tracking intensity. / RFG track intens

VECTOR_G	**Can be changed:** U, T	**Calculated:** CALC_MOD_ALL	**Access level:** 3
	Data type: FloatingPoint32	**Dynamic index:** DDS, p0180	**Func. diagram:** 3080
	P-Group: Setpoints	**Units group:** -	**Unit selection:** -
	Not for motor type: -	**Scaling:** -	**Expert list:** 1
	Min	**Max**	**Factory setting**
	0.0	50.0	1.3

Description: Sets the ramp-function generator tracking.

The output value of the ramp-function generator is tracked (corrected) corresponding to the maximum possible drive acceleration. The reference value is the deviation at the speed/velocity controller input that is necessary to ensure that the motor accelerates at the torque/force limit.

Recommend.: p1145 = 0.0:

This value de-activates the ramp-function generator tracking.

p1145 = 0.0 ... 1.0:

Generally, these values are not practical. They cause the motor to accelerate below its torque limit. The lower the selected value, the greater the margin between the controller and torque limit when accelerating.

p1145 > 1.0:

The greater the value, the higher the permissible deviation between the speed setpoint and speed actual value.

© Siemens AG 2012 All Rights Reserved

Notice: If ramp-function generator tracking is activated and the ramp time is set too short, this can cause unsteady acceleration.
Remedy:
- switch off ramp-function generator tracking (p1145 = 0).
- increase the ramp-up/ramp-down time (p1120, p1121).

Note: In the U/f mode, ramp-function generator tracking is not active.
For SERVO with U/f operation, the following applies:
The complete ramp-function generator is not active, i.e. ramp-up and ramp-down time = 0.

p1148[0...n] Ramp-function gen., tolerance for ramp-up and ramp-down active / RFG tol HL/RL act

VECTOR_G

Can be changed: U, T	**Calculated:** -	**Access level:** 3
Data type: FloatingPoint32	**Dynamic index:** DDS, p0180	**Func. diagram:** 3060, 3070
P-Group: Setpoints	**Units group:** 3_1	**Unit selection:** p0505
Not for motor type: -	**Scaling:** -	**Expert list:** 1
Min	**Max**	**Factory setting**
0.000 [rpm]	1000.000 [rpm]	19.800 [rpm]

Description: Sets the tolerance value for the status of the ramp-function generator (ramp-up active, ramp-down active).
If the input of the ramp-function generator does not change in comparison to the output by more than the entered tolerance time, then the status bits "ramp-up active" and "ramp-down active" are not influenced.

Dependency: Refer to: r1199

r1149 CO: Ramp-function generator, acceleration / RFG acceleration

VECTOR_G

Can be changed: -	**Calculated:** -	**Access level:** 3
Data type: FloatingPoint32	**Dynamic index:** -	**Func. diagram:** 3060, 3070
P-Group: Setpoints	**Units group:** 39_1	**Unit selection:** p0505
Not for motor type: -	**Scaling:** p2007	**Expert list:** 1
Min	**Max**	**Factory setting**
- [rev/s²]	- [rev/s²]	- [rev/s²]

Description: Displays the acceleration of the ramp-function generator.

Dependency: Refer to: p1145

r1150 CO: Ramp-function generator speed setpoint at the output / RFG n_set at outp

VECTOR_G

Can be changed: -	**Calculated:** -	**Access level:** 3
Data type: FloatingPoint32	**Dynamic index:** -	**Func. diagram:** 1550, 3080
P-Group: Setpoints	**Units group:** 3_1	**Unit selection:** p0505
Not for motor type: -	**Scaling:** p2000	**Expert list:** 1
Min	**Max**	**Factory setting**
- [rpm]	- [rpm]	- [rpm]

Description: Displays the setpoint at the output of the ramp-function generator.

p1151[0...n] Ramp-function generator configuration / RFG config

VECTOR_G

Can be changed: U, T	**Calculated:** -	**Access level:** 2
Data type: Unsigned16	**Dynamic index:** DDS, p0180	**Func. diagram:** 3070
P-Group: Setpoints	**Units group:** -	**Unit selection:** -
Not for motor type: -	**Scaling:** -	**Expert list:** 1
Min	**Max**	**Factory setting**
-	-	0000 bin

Description: Sets the configuration for the extended ramp-function generator.

Bit field:

Bit	Signal name	1 signal	0 signal	FP
00	Disable rounding-off at the zero cross-over	Yes	No	3070

Caution: Re bit 00 = 1:
If the ramp-up time is longer than the ramp-down time (p1120 > p1121), then there is an acceleration step at the zero crossover. This can have a negative impact on the mechanical system.

© Siemens AG 2012 All Rights Reserved

Note: Re bit 00 = 1:
When the direction change is changed there is no rounding-off before and after the zero crossover.

p1152 BI: Setpoint 2 enable / Setp 2 enab

VECTOR_G (Extended brk)	**Can be changed:** T	**Calculated:** -	**Access level:** 3
	Data type: Unsigned32 / Binary	**Dynamic index:** -	**Func. diagram:** 2711, 4015
	P-Group: Commands	**Units group:** -	**Unit selection:** -
	Not for motor type: -	**Scaling:** -	**Expert list:** 1
	Min	**Max**	**Factory setting**
	-	-	899.15

Description: Sets the signal source for "setpoint 2 enable".

p1155[0...n] CI: Speed controller speed setpoint 1 / n_ctrl n_set 1

VECTOR_G	**Can be changed:** T	**Calculated:** -	**Access level:** 3
	Data type: Unsigned32 / FloatingPoint32	**Dynamic index:** CDS, p0170	**Func. diagram:** 1550, 3080, 5030, 6031
	P-Group: Setpoints	**Units group:** -	**Unit selection:** -
	Not for motor type: -	**Scaling:** p2000	**Expert list:** 1
	Min	**Max**	**Factory setting**
	-	-	0

Description: Sets the signal source for speed setpoint 1 of the speed controller.

Dependency: The effectiveness of this setpoint depends on, e.g. STW1.4 and STW1.6.
Refer to: r0002, p0840, p0844, p0848, p0852, p0854, r0898, p1140, p1142, p1160, r1170, p1189

Notice: The parameter may be protected as a result of p0922 or p2079 and cannot be changed.

p1160[0...n] CI: Speed controller speed setpoint 2 / n_ctrl n_set 2

VECTOR_G	**Can be changed:** T	**Calculated:** -	**Access level:** 3
	Data type: Unsigned32 / FloatingPoint32	**Dynamic index:** CDS, p0170	**Func. diagram:** 1550, 3080
	P-Group: Setpoints	**Units group:** -	**Unit selection:** -
	Not for motor type: -	**Scaling:** p2000	**Expert list:** 1
	Min	**Max**	**Factory setting**
	-	-	0

Description: Sets the signal source for speed setpoint 2 of the speed controller.

Dependency: Refer to: p1155, r1170

Note: For OFF1/OFF3, the ramp-function generator ramp is effective.
The ramp-function generator is set (SERVO: to the actual value, VECTOR: To the setpoint (r1170)) and stops the drive corresponding to the ramp-downtime (p1121 or p1135). While stopping via the ramp-function generator, STW1.4 is effective (enable ramp-function generator).
When the function module "position control" (r0108.3 = 1) is activated, this connector input is interconnected as follows as standard:
CI: p1160 = r2562

r1169 CO: Speed controller, speed setpoints 1 and 2 / n_ctrl n_set 1/2

VECTOR_G	**Can be changed:** -	**Calculated:** -	**Access level:** 3
	Data type: FloatingPoint32	**Dynamic index:** -	**Func. diagram:** 3080
	P-Group: Setpoints	**Units group:** 3_1	**Unit selection:** p0505
	Not for motor type: -	**Scaling:** p2000	**Expert list:** 1
	Min	**Max**	**Factory setting**
	- [rpm]	- [rpm]	- [rpm]

Description: Displays the speed setpoint after the addition of the speed setpoint 1 (p1155) and speed setpoint 2 (p1160).

Dependency: Refer to: p1155, p1160

Note: The value is only correctly displayed at r0899.2 = 1 (operation enabled).

© Siemens AG 2012 All Rights Reserved

r1170 CO: Speed controller, setpoint sum / n_ctrl setp sum

VECTOR_G

Can be changed: -	**Calculated:** -	**Access level:** 3
Data type: FloatingPoint32	**Dynamic index:** -	**Func. diagram:** 1550, 1590, 1690, 1700, 1750, 3080, 5020, 6030
P-Group: Setpoints	**Units group:** 3_1	**Unit selection:** p0505
Not for motor type: -	**Scaling:** p2000	**Expert list:** 1
Min	**Max**	**Factory setting**
- [rpm]	- [rpm]	- [rpm]

Description: Displays the speed setpoint after selecting the ramp-function generator and adding the speed setpoint 1 (p1155) and speed setpoint 2 (p1160).

Dependency: Refer to: r1150, p1155, p1160

p1189[0...n] Speed setpoint configuration / n_ctrl config

VECTOR_G

Can be changed: U, T	**Calculated:** -	**Access level:** 2
Data type: Unsigned16	**Dynamic index:** DDS, p0180	**Func. diagram:** 3080
P-Group: Setpoints	**Units group:** -	**Unit selection:** -
Not for motor type: -	**Scaling:** -	**Expert list:** 1
Min	**Max**	**Factory setting**
-	-	0011 bin

Description: Sets the configuration for the speed setpoint.

Bit field:

Bit	Signal name	1 signal	0 signal	FP
00	Interpolation ramp-fct gen/speed controller active	Yes	No	3080
01	Interpol. op-loop ctrl /speed controller active	Yes	No	3080

Note: Re bit 01:

The interpolator is only effective in following cases:

- isochronous PROFIBUS operation with a sign-of-life received from the master (STW2.12 ... STW2.15).

r1197 Fixed speed setpoint number actual / n_set_fixed No act

VECTOR_G

Can be changed: -	**Calculated:** -	**Access level:** 3
Data type: Unsigned32	**Dynamic index:** -	**Func. diagram:** 3010
P-Group: Setpoints	**Units group:** -	**Unit selection:** -
Not for motor type: -	**Scaling:** -	**Expert list:** 1
Min	**Max**	**Factory setting**
-	-	-

Description: Displays the number of the selected fixed speed/velocity setpoint.

Dependency: Refer to: p1020, p1021, p1022, p1023

Note: If a fixed speed setpoint has not been selected (p1020 ... p1023 = 0, r1197 = 0), then r1024 = 0 (setpoint = 0).

r1198.0...15 CO/BO: Control word setpoint channel / STW setpoint chan

VECTOR_G

Can be changed: -	**Calculated:** -	**Access level:** 3
Data type: Unsigned16	**Dynamic index:** -	**Func. diagram:** 1530, 2505
P-Group: Setpoints	**Units group:** -	**Unit selection:** -
Not for motor type: -	**Scaling:** -	**Expert list:** 1
Min	**Max**	**Factory setting**
-	-	-

Description: Displays the control word for the setpoint channel.

Bit field:

Bit	Signal name	1 signal	0 signal	FP
00	Fixed setp bit 0	Yes	No	3010
01	Fixed setp bit 1	Yes	No	3010
02	Fixed setp bit 2	Yes	No	3010
03	Fixed setp bit 3	Yes	No	3010

© Siemens AG 2012 All Rights Reserved

05	Inhibit negative direction	Yes	No	3040
06	Inhibit positive direction	Yes	No	3040
11	Setpoint inversion	Yes	No	3040
13	Motorized potentiometer raise	Yes	No	3020
14	Motorized potentiometer lower	Yes	No	3020
15	Bypass ramp-function generator	Yes	No	3060, 3070

r1199.0...8 CO/BO: Ramp-function generator status word / RFG ZSW

VECTOR_G

Can be changed: - **Calculated:** - **Access level:** 3

Data type: Unsigned16 **Dynamic index:** - **Func. diagram:** 1550, 3080, 8010

P-Group: Setpoints **Units group:** - **Unit selection:** -

Not for motor type: - **Scaling:** - **Expert list:** 1

Min	Max	Factory setting
-	-	-

Description: Displays the status word for the ramp-function generator (RFG).

Bit field:

Bit	Signal name	1 signal	0 signal	FP
00	Ramp-up active	Yes	No	-
01	Ramp-down active	Yes	No	-
02	RFG active	Yes	No	-
03	Ramp-function generator set	Yes	No	-
04	Ramp-function generator held	Yes	No	-
05	Ramp-function generator tracking active	Yes	No	-
06	Maximum limit active	Yes	No	-
07	Ramp-function generator, acceleration positive	Yes	No	-
08	Ramp-function generator, acceleration negative	Yes	No	-

Note: Re bit 02:

The bit is an OR logic operation - bit 00 and bit 01.

p1200[0...n] Flying restart operating mode / FlyRest op_mode

VECTOR_G

Can be changed: U, T **Calculated:** - **Access level:** 2

Data type: Integer16 **Dynamic index:** DDS, p0180 **Func. diagram:** 1690

P-Group: Functions **Units group:** - **Unit selection:** -

Not for motor type: REL **Scaling:** - **Expert list:** 1

Min	Max	Factory setting
0	6	0

Description: Sets the operating mode for flying restart.

The flying restart allows the drive converter to be powered up while the motor is still rotating. In so doing, the drive converter output frequency is changed until the actual motor speed/velocity is found. The motor then accelerates up to the setpoint at the ramp-function generator setting.

Value:

0: Flying restart inactive
1: Flying restart always active (start in setpoint direction)
2: FlyRestart active after on, fault, OFF2 (start in setp. dir.)
3: FlyRestart active after fault, OFF2 (start in setp. direction)
4: Flying restart always active (start only in setpoint direction)
5: FlyRestart active after on, fault, OFF2 (start only in setp_dir)
6: FlyRestart active after fault, OFF2 (start only in setp. dir.)

Dependency: For induction motors, the following applies:

A differentiation is made between flying restart for U/f control and for vector control (p1300).

Flying restart, U/f control: p1202, p1203, r1204

Flying restart, vector control: p1202, p1203, r1205

For synchronous motors, the following applies:

Flying restart is not possible with U/f control or if, in the case of sensorless vector control, a Voltage Sensing Module (VSM) has not been connected and parameterized.

© Siemens AG 2012 All Rights Reserved

If two VSMs are connected to the Motor Module, then the motor voltage for the flying restart is measured using the second VSM (see p0151[1]).

If only one VSM is connected, then this can be used for the flying restart.

Refer to: p1201

Refer to: F07330, F07331

Notice: The "flying restart" function must be used in cases where the motor may still be running (e.g. after a brief line supply interruption) or is being driven by the load. The system might otherwise shut down as a result of overcurrent.

It does not make sense to use "flying restart" together with the "motor holding brake function" (p1215 > 0) because then the flying restart will always be realized with the motor stationary.

Note: For p1200 = 1, 4, the following applies:

Flying restart is active after faults, OFF1, OFF2, OFF3.

For p1200 = 2, 5, the following applies:

The "power-on" is the first power-on operation after the drive system has been booted. This is practical for motors with a high-inertia load.

For p1200 = 1, 2, 3, the following applies: The search is made in both directions.

For p1200 = 4, 5, 6, the following applies: The search is only made in the setpoint direction. For a setpoint of zero, a search is not made in the negative direction of rotation.

For operation with encoder, the following applies:

p1200 = 1, 4 as well as p1200 = 2, 5 and p1200 = 3, 6 have the same meaning.

For U/f control (p1300 < 20), the following applies:

The speed can only be sensed for values above approx. 5 % of the rated motor speed. For lower speeds, it is assumed that the motor is at a standstill.

If p1200 is changed while commissioning (p0009, p0010 > 0), then it is possible that the old value will no longer be able to be set. The reason for this is that the dynamic limits of p1200 have been changed by a parameter that was set when the drive was commissioned (e.g. p0300).

p1201[0...n] BI: Flying restart enable signal source / Fly_res enab S_src

VECTOR_G

Can be changed: T	**Calculated:** -	**Access level:** 3
Data type: Unsigned32 / Binary	**Dynamic index:** CDS, p0170	**Func. diagram:** -
P-Group: Functions	**Units group:** -	**Unit selection:** -
Not for motor type: REL	**Scaling:** -	**Expert list:** 1
Min	**Max**	**Factory setting**
-	-	1

Description: Sets the signal source to enable the "flying restart" function.

Dependency: Refer to: p1200

Note: Withdrawing the enable signal has the same effect as setting p1200 = 0.

p1202[0...n] Flying restart search current / FlyRest I_srch

VECTOR_G

Can be changed: U, T	**Calculated:** -	**Access level:** 4
Data type: FloatingPoint32	**Dynamic index:** DDS, p0180	**Func. diagram:** -
P-Group: Functions	**Units group:** -	**Unit selection:** -
Not for motor type: PEM, REL	**Scaling:** -	**Expert list:** 1
Min	**Max**	**Factory setting**
10 [%]	400 [%]	100 [%]

Description: Sets the search current for the "flying restart" function.

The value is referred to the motor magnetizing current.

Dependency: Refer to: r0331

Caution: An unfavorable parameter value can result in the motor behaving in an uncontrollable fashion.

Note: In U/f control mode, the parameter serves as a threshold value for establishing the current at the beginning of the flying restart function. When the threshold value is reached, the prevailing search current is set dependent upon the frequency on the basis of voltage inputs.

© Siemens AG 2012 All Rights Reserved

Reducing the search current can also improve flying restart performance (if the system moment of inertia is not very high, for example).

p1203[0...n] Flying restart search rate factor / FlyRst v_Srch Fact

VECTOR_G

Can be changed: U, T	**Calculated:** -	**Access level:** 3
Data type: FloatingPoint32	**Dynamic index:** DDS, p0180	**Func. diagram:** -
P-Group: Functions	**Units group:** -	**Unit selection:** -
Not for motor type: PEM, REL	**Scaling:** -	**Expert list:** 1
Min	**Max**	**Factory setting**
10 [%]	4000 [%]	100 [%]

Description: Sets the factor for the search speed for flying restart.

The value influences the rate at which the output frequency is changed during a flying restart . A higher value results in a longer search time.

Recommend.: For encoderless vector control and motor cables longer than 200 m, set the factor p1203 >= 300 %.

Caution: An unfavorable parameter value can result in the motor behaving in an uncontrollable fashion.

For vector control, a value that is too low or too high can cause flying restart to become unstable.

Note: The parameter factory setting is selected so that standard induction motors that are rotating can be found and restarted as quickly as possible (fast flying restart).

With this pre-setting, if the motor is not found (e.g. for motors that are accelerated as a result of active loads or with U/f control and low speeds), we recommend that the search rate is reduced (by increasing p1203).

r1204.0...13 CO/BO: Flying restart, U/f control status / FlyRest Uf st

VECTOR_G

Can be changed: -	**Calculated:** -	**Access level:** 4
Data type: Unsigned16	**Dynamic index:** -	**Func. diagram:** -
P-Group: Functions	**Units group:** -	**Unit selection:** -
Not for motor type: PEM, REL	**Scaling:** -	**Expert list:** 1
Min	**Max**	**Factory setting**
-	-	-

Description: Displays the status for checking and monitoring flying restart states in the U/f control mode.

Bit field:

Bit	Signal name	1 signal	0 signal	FP
00	Current impressed	Yes	No	-
01	No current flow	Yes	No	-
02	Voltage input	Yes	No	-
03	Voltage reduced	Yes	No	-
04	Start ramp-function generator	Yes	No	-
05	Wait for execution	Yes	No	-
06	Slope filter act	Yes	No	-
07	Positive gradient	Yes	No	-
08	Current < thresh	Yes	No	-
09	Current minimum	Yes	No	-
10	Search in the positive direction	Yes	No	-
11	Stop after positive direction	Yes	No	-
12	Stop after negative direction	Yes	No	-
13	No result	Yes	No	-

r1205.0...15 CO/BO: Flying restart, vector control status / FlyRest vector st

VECTOR_G

Can be changed: -	**Calculated:** -	**Access level:** 4
Data type: Unsigned16	**Dynamic index:** -	**Func. diagram:** -
P-Group: Functions	**Units group:** -	**Unit selection:** -
Not for motor type: PEM, REL	**Scaling:** -	**Expert list:** 1
Min	**Max**	**Factory setting**
-	-	-

Description: Displays the status for checking and monitoring flying restart states in the vector control mode.

© Siemens AG 2012 All Rights Reserved

Bit field:

Bit	Signal name	1 signal	0 signal	FP
00	Speed adaptation circuit record angle	Yes	No	-
01	Speed adaptation circuit set gain to 0	Yes	No	-
02	Isd channel enable	Yes	No	-
03	Speed control switched out	Yes	No	-
04	Quadrature arm switched in	Yes	No	-
05	Special transformation active	Yes	No	-
06	Speed adaptation circuit set I comp to 0	Yes	No	-
07	Current control on	Yes	No	-
08	Isd_set = 0 A	Yes	No	-
09	Frequency held	Yes	No	-
10	Search in the positive direction	Yes	No	-
11	Search Started	Yes	No	-
12	Current impressed	Yes	No	-
13	Search interrupted	Yes	No	-
14	Speed adaptation circuit deviation = 0	Yes	No	-
15	Speed control activated	Yes	No	-

Note: Re bit 00 ... 09:

Used to control internal sequences during the flying restart.

Depending on the motor type (p0300), the number of active bits differs.

Re bits 10 ... 15:

Are used to monitor the flying restart sequence.

For permanent-magnet synchronous motors (PEM) only bits 10, 11 and 15 are supported.

p1206[0...9] Faults without automatic restart / F w/out auto AR

B_INF, VECTOR_G

Can be changed: U, T	**Calculated:** -	**Access level:** 3
Data type: Unsigned16	**Dynamic index:** -	**Func. diagram:** -
P-Group: Functions	**Units group:** -	**Unit selection:** -
Not for motor type: -	**Scaling:** -	**Expert list:** 1
Min	**Max**	**Factory setting**
0	65535	0

Description: Sets faults for which automatic restart should not be effective.

Dependency: The setting is only effective for p1210 = 6, 16.

Refer to: p1210

p1207 BI: AR connection following drive object / AR connection DO

B_INF

Can be changed: U, T	**Calculated:** -	**Access level:** 3
Data type: Unsigned32 / Binary	**Dynamic index:** -	**Func. diagram:** -
P-Group: Functions	**Units group:** -	**Unit selection:** -
Not for motor type: -	**Scaling:** -	**Expert list:** 1
Min	**Max**	**Factory setting**
-	-	0

Description: Modifies the pre-charging monitoring of the infeed.

The active automatic restart (AR) of the following drive object can be interconnected using this binector input (BI: p1207 = r1214.2).

This means that when the automatic restart is operational, the pre-charging monitoring of the infeed is de-activated and is only re-activated under the following conditions:

- the absolute current in the DC link is greater than 2 % of the maximum current (r0209) of the infeed to provide protection against short-circuit in the DC link.

- if a Voltage Sensing Module (VSM) is being used, the line supply voltage amplitude is greater than 3 % of the parameterized unit supply voltage (p0210) to protect the pre-charging resistors against continuous filter current when the line supply partially returns.

Dependency: Refer to: r0209, p0210, r1214

© Siemens AG 2012 All Rights Reserved

p1208[0...1] BI: AR modification infeed / AR modification

VECTOR_G	**Can be changed:** U, T	**Calculated:** -	**Access level:** 3
	Data type: Unsigned32 / Binary	**Dynamic index:** -	**Func. diagram:** -
	P-Group: Functions	**Units group:** -	**Unit selection:** -
	Not for motor type: -	**Scaling:** -	**Expert list:** 1
	Min	**Max**	**Factory setting**
	-	-	0

Description: Sets the signal source to modify the automatic restart (AR).

Interconnections between the automatic restart and infeed:

With the following interconnection in the mode p1210 = 6, the automatic restart can respond to infeed faults:

BI: p1208[0] = r2139.3

With the following interconnection, in the mode p1210 = 4, the automatic restart can respond to line supply failure of the infeed:

BI: p1208[1] = r0863.2

Index: [0] = Infeed fault
[1] = Infeed line supply failure

Dependency: Refer to: r0863, r2139

p1210 Automatic restart, mode / AR mode

B_INF	**Can be changed:** U, T	**Calculated:** -	**Access level:** 2
	Data type: Integer16	**Dynamic index:** -	**Func. diagram:** -
	P-Group: Functions	**Units group:** -	**Unit selection:** -
	Not for motor type: -	**Scaling:** -	**Expert list:** 1
	Min	**Max**	**Factory setting**
	0	6	0

Description: Sets the automatic restart mode (AR).

Value:
0: Inhibit automatic restart
1: Acknowledge all faults without restarting
4: Restart after line supply failure w/o additional start attempts
6: Restart after fault with additional start attempts

Dependency: The automatic restart requires an active ON command (e.g., via a digital input). If, for p1210 > 1, there is no active ON command, then the automatic restart is interrupted.

When using an Advanced Operator Panel (AOP) in the LOCAL Mode, then there is no automatic restart.

Refer to: p0840, p0857, p1267

Refer to: F30003

Danger: If the automatic restart is activated (p1210 > 1) if there is an ON command (refer to p0840), the drive is powered up as soon as any fault messages that are present can be acknowledged. This also occurs after the line supply returns or the Control Unit boots if the DC link voltage is again present or the feedback of the line supply infeed (refer to p0864) is again available. This automatic power-up sequence can only be interrupted by withdrawing the ON command.

Caution: A change is only accepted and made in the state "initialization" (r1214.0) and "wait for alarm" (r1214.1).

For p1210 > 1, the infeed is automatically started.

Note: When automatic restart mode is activated, the supply voltage must remain connected (e.g. backed up by UPS).

Re p1210 = 1:

Faults that are present are automatically acknowledged. If new faults occur after a successful fault acknowledgment, then these are also automatically acknowledged again. A minimum time of p1212 + 1 s must expire between a successful fault acknowledgement and a fault re-occurring if the signal ON/OFF1 (STW1.0) is at a HIGH signal level. If the signal ON/OFF1 is at a LOW signal level, then the time between a successful fault acknowledgement and a new fault must be at least 1 s. p1211 has no influence on the number of acknowledgment attempts.

Re p1210 = 4:

An automatic restart is only executed if fault F06200 has occurred. If additional faults are present, then these faults are also acknowledged and when successful, starting continues. If the 24 V Control Unit power supply fails, then this is interpreted as a line supply failure.

© Siemens AG 2012 All Rights Reserved

Re p1210 = 6:

An automatic restart is carried out if any fault has occurred.

p1210 Automatic restart, mode / AR mode

VECTOR_G

Can be changed: U, T	**Calculated:** -	**Access level:** 2
Data type: Integer16	**Dynamic index:** -	**Func. diagram:** -
P-Group: Functions	**Units group:** -	**Unit selection:** -
Not for motor type: -	**Scaling:** -	**Expert list:** 1
Min	**Max**	**Factory setting**
0	16	0

Description: Sets the automatic restart mode (AR).

Value:

0: Inhibit automatic restart
1: Acknowledge all faults without restarting
4: Restart after line supply failure w/o additional start attempts
6: Restart after fault with additional start attempts
14: Restart after line supply failure following man. acknowledgment
16: Restart after fault following manual acknowledgment

Recommend.: For brief line supply failures, the motor shaft may still be rotating when restarting. The "flying restart" function (p1200) might need to be activated to restart while the motor shaft is still rotating.

Dependency: The automatic restart requires an active ON command (e.g., via a digital input). If, for p1210 > 1, there is no active ON command, then the automatic restart is interrupted.

When using an Operator Panel in the LOCAL mode, then there is no automatic start.

For p1210 = 14, 16, a manual acknowledgement is required for an automatic restart.

Refer to: p0840, p0857, p1267

Refer to: F30003

Danger: If the automatic restart is activated (p1210 > 1) if there is an ON command (refer to p0840), the drive is powered up as soon as any fault messages that are present can be acknowledged. This also occurs after the line supply returns or the Control Unit boots if the DC link voltage is again present or the feedback of the line supply infeed (refer to p0864) is again available. This automatic power-up sequence can only be interrupted by withdrawing the ON command.

Caution: A change is only accepted and made in the state "initialization" (r1214.0) and "wait for alarm" (r1214.1). When faults are present, therefore, the parameter cannot be changed.

For p1210 > 1, the motor is automatically started.

Note: When automatic restart mode is activated, the supply voltage must remain connected (e.g. backed up by UPS).

Re p1210 = 1:

Faults that are present are automatically acknowledged. If new faults occur after a successful fault acknowledgment, then these are also automatically acknowledged again. p1211 has no influence on the number of acknowledgment attempts.

Re p1210 = 4:

An automatic restart is only carried out if fault F30003 occurred at the Motor Module or a 1 signal is present at binector input p1208[1]. If additional faults are present, then these faults are also acknowledged and when successful, starting continues. If the 24 V Control Unit power supply fails, then this is interpreted as a line supply failure.

Re p1210 = 6:

An automatic restart is carried out if any fault has occurred or there is a 1 signal at binector input p1208[0].

Re p1210 = 14:

As for p1210 = 4. However, faults that are present must be manually acknowledged.

Re p1210 = 16:

As for p1210 = 6. However, faults that are present must be manually acknowledged.

© Siemens AG 2012 All Rights Reserved

p1211 Automatic restart, start attempts / AR start attempts

B_INF

Can be changed: U, T	**Calculated:** -	**Access level:** 3
Data type: Unsigned16	**Dynamic index:** -	**Func. diagram:** -
P-Group: Functions	**Units group:** -	**Unit selection:** -
Not for motor type: -	**Scaling:** -	**Expert list:** 1
Min	**Max**	**Factory setting**
0	10	3

Description: Sets the start attempts of the automatic restart function for p1210 = 4, 6.

Dependency: The setting of this parameter is always effective for p1210 = 6. For p1210 = 4, the parameter only has an influence if an additional line phase failure (F6200) occurs at the start attempt.

Refer to: p1210, r1214

Refer to: F07320

Caution: A change is only accepted and made in the state "initialization" (r1214.0) and "wait for alarm" (r1214.1).

Notice: After fault F07320 occurs, the power-on command must be withdrawn and all of the faults acknowledged so that the automatic restart function is re-activated.

After a complete power failure the start counter always starts with the counter value that applied before the power failure, and decrements this start attempt by 1. If a further attempt to acknowledge is started by the automatic restart function prior to power failure, e.g. when the CU remains active on power failure longer than the time p1212 / 2, the fault counter will already have been decremented once. In this case, the start counter is thus decreased by the value 2.

Note: A start attempt starts immediately when a fault occurs. The restart attempt is considered to have been completed if the infeed is powered up and an additional delay time of 1 s has expired.

As long as a fault is present, an acknowledge command is generated in the time intervals of p1212 / 2. When successfully acknowledged, the start counter is decremented. If, after this, a fault re-occurs before a restart has been completed, then acknowledgement starts again from the beginning.

Fault F07320 is output if, after several faults occur, the number of parameterized start attempts has been reached. After a successful start attempt (i.e. a fault/error has no longer occurred up to the end of the power-up operation) the start counter is again reset to the parameter value after 1 s. If faults re-occur, the parameterized number of start attempts is again available.

At least one start attempt is always carried out.

After a line supply failure, acknowledgement is immediate and when the line supply returns, the system is powered up. If, between successfully acknowledging the line fault and the line supply returning, another fault occurs, then its acknowledgement also causes the start counter to be decremented.

p1211 Automatic restart, start attempts / AR start attempts

VECTOR_G

Can be changed: U, T	**Calculated:** -	**Access level:** 3
Data type: Unsigned16	**Dynamic index:** -	**Func. diagram:** -
P-Group: Functions	**Units group:** -	**Unit selection:** -
Not for motor type: -	**Scaling:** -	**Expert list:** 1
Min	**Max**	**Factory setting**
0	10	3

Description: Sets the start attempts of the automatic restart function for p1210 = 4, 6.

Dependency: Refer to: p1210, r1214

Refer to: F07320

Caution: A change is only accepted and made in the state "initialization" (r1214.0) and "wait for alarm" (r1214.1).

Notice: After fault F07320 occurs, the power-on command must be withdrawn and all of the faults acknowledged so that the automatic restart function is re-activated.

After a complete power failure the start counter always starts with the counter value that applied before the power failure, and decrements this start attempt by 1. If a further attempt to acknowledge is started by the automatic restart function prior to power failure, e.g. when the CU remains active on power failure longer than the time p1212 / 2, the fault counter will already have been decremented once. In this case, the start counter is thus decreased by the value 2.

© Siemens AG 2012 All Rights Reserved

Note: A start attempt starts immediately when a fault occurs. The start attempt is considered to been completed if the motor was magnetized (r0056.4 = 1) and an additional delay time of 1 s has expired.

As long as a fault is present, an acknowledge command is generated in the time intervals of p1212 / 2. When successfully acknowledged, the start counter is decremented. If, after this, a fault re-occurs before a restart has been completed, then acknowledgement starts again from the beginning.

Fault F07320 is output if, after several faults occur, the number of parameterized start attempts has been reached. After a successful start attempt, i.e. a fault/error has no longer occurred up to the end of the magnetizing phase, the start counter is again reset to the parameter value after 1 s. If a fault re-occurs - the parameterized number of start attempts is again available.

At least one start attempt is always carried out.

After a line supply failure, acknowledgement is immediate and when the line supply returns, the system is powered up. If, between successfully acknowledging the line fault and the line supply returning, another fault occurs, then its acknowledgement also causes the start counter to be decremented.

p1212 Automatic restart, delay time start attempts / AR t_wait start

B_INF

Can be changed: U, T	**Calculated:** -	**Access level:** 3
Data type: FloatingPoint32	**Dynamic index:** -	**Func. diagram:** -
P-Group: Functions	**Units group:** -	**Unit selection:** -
Not for motor type: -	**Scaling:** -	**Expert list:** 1
Min	**Max**	**Factory setting**
0.1 [s]	1000.0 [s]	1.0 [s]

Description: Sets the delay time up to restart.

Dependency: This parameter setting is active for p1210 = 4, 6.

For p1210 = 1, the following applies:

Only automatic acknowledgment of the faults, no restart.

Refer to: p1210, r1214

Caution: A change is only accepted and made in the state "initialization" (r1214.0) and "wait for alarm" (r1214.1).

Note: The faults are automatically acknowledged and the system is powered up again after half of the delay time has expired and after the full delay time has expired.

p1212 Automatic restart, delay time start attempts / AR t_wait start

VECTOR_G

Can be changed: U, T	**Calculated:** -	**Access level:** 3
Data type: FloatingPoint32	**Dynamic index:** -	**Func. diagram:** -
P-Group: Functions	**Units group:** -	**Unit selection:** -
Not for motor type: -	**Scaling:** -	**Expert list:** 1
Min	**Max**	**Factory setting**
0.1 [s]	1000.0 [s]	1.0 [s]

Description: Sets the delay time up to restart.

Dependency: This parameter setting is active for p1210 = 4, 6.

For p1210 = 1, the following applies:

Faults are only automatically acknowledged in half of the waiting time, no restart.

Refer to: p1210, r1214

Caution: A change is only accepted and made in the state "initialization" (r1214.0) and "wait for alarm" (r1214.1).

Note: The faults are automatically acknowledged after half of the delay time has expired and the full delay time.

If the cause of a fault is not removed in the first half of the delay time, then it is no longer possible to acknowledge in the delay time.

© Siemens AG 2012 All Rights Reserved

p1213[0...1] Automatic restart, monitoring time / AR t_monit

B_INF

Can be changed: U, T	**Calculated:** -	**Access level:** 3
Data type: FloatingPoint32	**Dynamic index:** -	**Func. diagram:** -
P-Group: Functions	**Units group:** -	**Unit selection:** -
Not for motor type: -	**Scaling:** -	**Expert list:** 1
Min	**Max**	**Factory setting**
0.0 [s]	10000.0 [s]	0.0 [s]

Description: Sets the monitoring time of the automatic restart (AR).

Index: [0] = Restart
[1] = Reset start counter

Dependency: Refer to: p1210, r1214

Caution: A change is only accepted and made in the state "initialization" (r1214.0) and "wait for alarm" (r1214.1).

Notice: After fault F07320 occurs, the power-on command must be withdrawn and all of the faults acknowledged so that the automatic restart function is re-activated.

Note: Index 0:

The monitoring time starts when the faults are detected. If the automatic acknowledgements are not successful, the monitoring time runs again. If the drive has not restarted at the end of the monitoring time, fault F07320 is signaled.

The monitoring is de-activated with p1213 = 0. If p1213 is set to a value which is lower than in p1212, fault F07320 is generated at each restart. If, for p1210 = 1, the time in p1213 is set lower than in p1212, then fault F07320 is also generated at each restart.

The monitoring time must be extended if the faults that occur cannot be immediately and successfully acknowledged (e.g. for faults that are permanently present).

Index 1:

The start counter (refer to r1214) is only set back to the starting value p1211 if, after successful restart, the time in p1213[1] has expired. The delay time is not effective for fault acknowledgement without automatic restart (p1210 = 1). After a power failure (blackout) the delay time only starts after the line supply returns and the Control Unit boots. The start counter is set to p1211, if F07320 occurred, the power-on command is withdrawn and the fault is acknowledged.

The start counter is immediately updated if the starting value p1211 or the mode p1210 is changed.

p1213[0...1] Automatic restart, monitoring time / AR t_monit

VECTOR_G

Can be changed: U, T	**Calculated:** -	**Access level:** 3
Data type: FloatingPoint32	**Dynamic index:** -	**Func. diagram:** -
P-Group: Functions	**Units group:** -	**Unit selection:** -
Not for motor type: -	**Scaling:** -	**Expert list:** 1
Min	**Max**	**Factory setting**
0.0 [s]	10000.0 [s]	0.0 [s]

Description: Sets the monitoring time of the automatic restart (AR).

Index: [0] = Restart
[1] = Reset start counter

Dependency: Refer to: p1210, r1214

Caution: A change is only accepted and made in the state "initialization" (r1214.0) and "wait for alarm" (r1214.1).

Notice: After fault F07320 occurs, the power-on command must be withdrawn and all of the faults acknowledged so that the automatic restart function is re-activated.

Note: Index 0:

The monitoring time starts when the faults are detected. If the automatic acknowledgements are not successful, the monitoring time runs again. If, after the monitoring time has expired, the drive has still not successfully started again (flying restart and magnetizing of the motor must have been completed: r0056.4 = 1), then fault F07320 is output.

The monitoring is de-activated with p1213 = 0. If p1213 is set lower than the sum of p1212, the magnetizing time p0346 and the additional delay time due to the flying restart, then fault F07320 is generated at each restart. If, for p1210 = 1, the time in p1213 is set lower than in p1212, then fault F07320 is also generated at each restart.

The monitoring time must be extended if the faults that occur cannot be immediately and successfully acknowledged (e.g. for faults that are permanently present).

In the case of p1210 = 14, 16, the faults which are present must be acknowledged manually within the time in p1213[0]. Otherwise, fault F07320 is generated after the set time.

© Siemens AG 2012 All Rights Reserved

Index 1:

The start counter (refer to r1214) is only set back to the starting value p1211 if, after successful restart, the time in p1213[1] has expired. The delay time is not effective for fault acknowledgement without automatic restart (p1210 = 1). After a power failure (blackout) the delay time only starts after the line supply returns and the Control Unit boots. The start counter is set to p1211, if F07320 occurred, the power-on command is withdrawn and the fault is acknowledged.

The start counter is immediately updated if the starting value p1211 or the mode p1210 is changed.

r1214.0...15 CO/BO: Automatic restart, status / AR status

B_INF

Can be changed: -	**Calculated:** -	**Access level:** 3
Data type: Unsigned16	**Dynamic index:** -	**Func. diagram:** -
P-Group: Functions	**Units group:** -	**Unit selection:** -
Not for motor type: -	**Scaling:** -	**Expert list:** 1
Min	**Max**	**Factory setting**
-	-	-

Description: Displays the status of the automatic restart (AR).

Bit field:

Bit	Signal name	1 signal	0 signal	FP
00	Initialization	Yes	No	-
01	Wait for alarm	Yes	No	-
02	Auto restart act	Yes	No	-
03	Setting the acknowledgement command	Yes	No	-
04	Acknowledge alarms	Yes	No	-
05	Restart	Yes	No	-
06	Delay time running after automatic power-up	Yes	No	-
07	Fault	Yes	No	-
10	Effective fault	Yes	No	-
12	Start count. bit 0	ON	OFF	-
13	Start count. bit 1	ON	OFF	-
14	Start count. bit 2	ON	OFF	-
15	Start count. bit 3	ON	OFF	-

Note:

Re bit 00:

State to display the single initialization after POWER ON.

Re bit 01:

State in which the automatic restart function waits for faults (initial state).

Re bit 02:

General display that a fault has been identified and that the restart or acknowledgement has been initiated.

Re bit 03:

Displays the acknowledge command within the "acknowledge alarms" state (bit 4 = 1). For bit 5 = 1 or bit 6 = 1, the acknowledge command is continually displayed.

Re bit 04:

State in which the faults that are present are acknowledged. The state is exited again after successful acknowledgement. A change is only made into the next state if it is signaled that a fault is no longer present after an acknowledgement command (bit 3 = 1).

Re bit 05:

State in which the drive is automatically powered up (only for p1210 = 4, 6).

Re bit 06:

State in which the system waits after having been powered up, to the end of the start attempt.

For p1210 = 1, this signal is directly set after the faults have been successfully acknowledged.

Re bit 07:

State which is assumed after a fault occurs within the automatic restart function.

Re bits 12 ... 15:

Actual state of the start counter (binary coded).

© Siemens AG 2012 All Rights Reserved

r1214.0...15 CO/BO: Automatic restart, status / AR status

VECTOR_G

Can be changed: -	**Calculated:** -	**Access level:** 3
Data type: Unsigned16	**Dynamic index:** -	**Func. diagram:** -
P-Group: Functions	**Units group:** -	**Unit selection:** -
Not for motor type: -	**Scaling:** -	**Expert list:** 1
Min	**Max**	**Factory setting**
-	-	-

Description: Displays the status of the automatic restart (AR).

Bit field:

Bit	Signal name	1 signal	0 signal	FP
00	Initialization	Yes	No	-
01	Wait for alarm	Yes	No	-
02	Auto restart act	Yes	No	-
03	Setting the acknowledgement command	Yes	No	-
04	Acknowledge alarms	Yes	No	-
05	Restart	Yes	No	-
06	Delay time running after automatic power-up	Yes	No	-
07	Fault	Yes	No	-
10	Effective fault	Yes	No	-
12	Start count. bit 0	ON	OFF	-
13	Start count. bit 1	ON	OFF	-
14	Start count. bit 2	ON	OFF	-
15	Start count. bit 3	ON	OFF	-

Note:

Re bit 00:

State to display the single initialization after POWER ON.

Re bit 01:

State in which the automatic restart function waits for faults (initial state).

Re bit 02:

General display that a fault has been identified and that the restart or acknowledgement has been initiated.

Re bit 03:

Displays the acknowledge command within the "acknowledge alarms" state (bit 4 = 1). For bit 5 = 1 or bit 6 = 1, the acknowledge command is continually displayed.

Re bit 04:

State in which the faults that are present are acknowledged. The state is exited again after successful acknowledgement. A change is only made into the next state if it is signaled that a fault is no longer present after an acknowledgement command (bit 3 = 1).

Re bit 05:

State in which the drive is automatically powered up (only for p1210 = 4, 6).

Re bit 06:

State in which the system waits after having been powered up, to the end of the start attempt (to the end of the magnetizing process).

For p1210 = 1, this signal is directly set after the faults have been successfully acknowledged.

Re bit 07:

State which is assumed after a fault occurs within the automatic restart function. This is only reset after acknowledging the fault and withdrawing the power-on command.

Re bit 10:

When the automatic restart function is active, r1214 bit 7 is displayed, otherwise the effective fault r2139 bit 3.

Re bits 12 ... 15:

Actual state of the start counter (binary coded).

© Siemens AG 2012 All Rights Reserved

p1215 Motor holding brake configuration / Brake config

VECTOR_G

Can be changed: T	**Calculated:** -	**Access level:** 2
Data type: Integer16	**Dynamic index:** -	**Func. diagram:** 2701, 2707, 2711
P-Group: Functions	**Units group:** -	**Unit selection:** -
Not for motor type: -	**Scaling:** -	**Expert list:** 1
Min	**Max**	**Factory setting**
0	3	0

Description: Sets the holding brake configuration.

Value:
0: No motor holding brake available
1: Motor holding brake acc. to sequence control
2: Motor holding brake always open
3: Motor holding brake like sequence control, connection via BICO

Dependency: Refer to: p1216, p1217, p1226, p1227, p1228, p1278

Caution: For the setting p1215 = 0, if a brake is used, it remains closed. If the motor moves, this will destroy the brake.

Notice: If p1215 was set to 1 or if p1215 was set to 3, then when the pulses are suppressed, the brake is closed even if the motor is still rotating. Pulse suppression can either be caused by a 0 signal at p0844, p0845 or p0852 or as a result of a fault with OFF2 response. If this is not desirable (e.g. for a flying restart), then the brake can be kept open using a 1 signal at p0855.

Note: If the configuration is set to "no holding brake present" when booting, then the motor holding brake will be automatically identified. If a motor holding brake is detected, the configuration is set to "motor holding brake as for sequence control".

If a motor holding brake is used via the brake connection of the Motor Module integrated in the drive, then it is not permissible that p1215 is set to 3.

if an external motor holding brake is being used, then p1215 should be set to 3 and r0899.12 should be interconnected as control signal.

When the function module "extended brake control" is activated (r0108.14 = 1), r1229.1 should be interconnected as control signal.

The parameter can only be set to zero when the pulses are inhibited.

The parameterization "no motor holding brake available" and "Safe Brake Control" enabled (p1215 = 0, p9602 = 1, p9802 = 1) is not practical if there is no motor holding brake.

The parameterization "motor holding brake the same as sequence control, connection via BICO" and "Safe Brake Control" enabled (p1215 = 3, p9602 = 1, p9802 = 1) is not practical.

p1216 Motor holding brake, opening time / Brake t_open

VECTOR_G

Can be changed: U, T	**Calculated:** -	**Access level:** 2
Data type: FloatingPoint32	**Dynamic index:** -	**Func. diagram:** 2701, 2711
P-Group: Functions	**Units group:** -	**Unit selection:** -
Not for motor type: -	**Scaling:** -	**Expert list:** 1
Min	**Max**	**Factory setting**
0 [ms]	10000 [ms]	100 [ms]

Description: Sets the time to open the motor holding brake.

After controlling the holding brake (opens), the speed/velocity setpoint remains at zero for this time. After this, the speed/velocity setpoint is enabled.

Recommend.: This time should be set longer than the actual opening time of the brake. This ensures that the drive cannot accelerate when the brake is applied.

Dependency: Refer to: p1215, p1217

Note: For a motor with DRIVE-CLiQ and integrated brake, for p0300 = 10000, this time is pre-assigned the value saved in the motor.

© Siemens AG 2012 All Rights Reserved

p1217 Motor holding brake closing time / Brake t_close

VECTOR_G	**Can be changed:** U, T	**Calculated:** -	**Access level:** 2
	Data type: FloatingPoint32	**Dynamic index:** -	**Func. diagram:** 2701, 2711
	P-Group: Functions	**Units group:** -	**Unit selection:** -
	Not for motor type: -	**Scaling:** -	**Expert list:** 1
	Min	**Max**	**Factory setting**
	0 [ms]	10000 [ms]	100 [ms]

Description: Sets the time to apply the motor holding brake.

After OFF1 or OFF3 and the holding brake is controlled (the brake closes), then the drive remains closed-loop controlled for this time stationary with a speed setpoint/velocity setpoint of zero. The pulses are suppressed when the time expires.

Recommend.: This time should be set longer than the actual closing time of the brake. This ensures that the pulses are only suppressed after the brake has closed.

Dependency: Refer to: p1215, p1216

Notice: If the selected closing time is too short with respect to the actual closing time of the brake, then the load can sag.

If the closing time is selected to be too long with respect to the actual closing time of the brake, the control works against the brake and therefore reduces its lifetime.

Note: For a motor with DRIVE-CLiQ and integrated brake, for p0300 = 10000, this time is pre-assigned the value saved in the motor.

p1218[0...1] BI: Open motor holding brake / Open brake

VECTOR_G (Extended brk)	**Can be changed:** T	**Calculated:** -	**Access level:** 2
	Data type: Unsigned32 / Binary	**Dynamic index:** -	**Func. diagram:** 2707
	P-Group: Functions	**Units group:** -	**Unit selection:** -
	Not for motor type: -	**Scaling:** -	**Expert list:** 1
	Min	**Max**	**Factory setting**
	-	-	1

Description: Sets the signal source for a conditional opening of the motor holding brake.

Dependency: Refer to: p1215

Note: [0]: Signal, open brake, AND logic operation, input 1

[1]: Signal, open brake, AND logic operation, input 2

p1219[0...3] BI: Immediately close motor holding brake / Close brake

VECTOR_G (Extended brk)	**Can be changed:** T	**Calculated:** -	**Access level:** 2
	Data type: Unsigned32 / Binary	**Dynamic index:** -	**Func. diagram:** 2707
	P-Group: Functions	**Units group:** -	**Unit selection:** -
	Not for motor type: -	**Scaling:** -	**Expert list:** 1
	Min	**Max**	**Factory setting**
	-	-	[0] 0
			[1] 0
			[2] 0
			[3] 1229.9

Description: Sets the signal source for an unconditional (immediate) closing of the motor holding brake.

Dependency: Refer to: p1215, p1275

Note: [0]: Signal, immediately close brake, inversion via p1275.0

[1]: Signal, immediately close brake, inversion via p1275.1

[2]: Signal, immediately close brake

[3]: Signal, immediately close brake - refer to the factory setting

These four signals form an OR logic operation.

© Siemens AG 2012 All Rights Reserved

p1220 CI: Open motor holding brake, signal source, threshold / Open brake thresh

VECTOR_G (Extended brk)

Can be changed: T	**Calculated:** -	**Access level:** 2
Data type: Unsigned32 / FloatingPoint32	**Dynamic index:** -	**Func. diagram:** 2707
P-Group: Functions	**Units group:** -	**Unit selection:** -
Not for motor type: -	**Scaling:** PERCENT	**Expert list:** 1
Min	**Max**	**Factory setting**
-	-	1

Description: Sets the signal source for the command "open brake".

Dependency: Refer to: p1215, p1221, r1229, p1277

p1221 Open motor holding brake, threshold / Open brake thresh

VECTOR_G (Extended brk)

Can be changed: U, T	**Calculated:** -	**Access level:** 2
Data type: FloatingPoint32	**Dynamic index:** -	**Func. diagram:** 2707
P-Group: Functions	**Units group:** -	**Unit selection:** -
Not for motor type: -	**Scaling:** -	**Expert list:** 1
Min	**Max**	**Factory setting**
0.00 [%]	200.00 [%]	0.00 [%]

Description: Sets the threshold value for the command "open brake".

Dependency: Refer to: p1220, r1229, p1277

p1222 BI: Motor holding brake feedback signal brake closed / Brake feedb closed

VECTOR_G (Extended brk)

Can be changed: T	**Calculated:** -	**Access level:** 2
Data type: Unsigned32 / Binary	**Dynamic index:** -	**Func. diagram:** 2711
P-Group: Functions	**Units group:** -	**Unit selection:** -
Not for motor type: -	**Scaling:** -	**Expert list:** 1
Min	**Max**	**Factory setting**
-	-	0

Description: Sets the signal source for the feedback signal "brake closed".

For motor holding brakes with feedback signal, the signal "brake closed" can be activated using p1275.5 = 1.

Dependency: Refer to: p1223, p1275

Note: 1 signal: Brake closed.

When braking with 1 feedback signal, the inverted feedback signal is connected to the BICO input for the second feedback signal (p1223).

For r1229.5 = 1, OFF1/OFF3 are suppressed to prevent the drive accelerating by a load that drives the motor - whereby OFF2 remains effective.

p1223 BI: Motor holding brake feedback signal brake open / Brake feedb open

VECTOR_G (Extended brk)

Can be changed: T	**Calculated:** -	**Access level:** 2
Data type: Unsigned32 / Binary	**Dynamic index:** -	**Func. diagram:** 2711
P-Group: Functions	**Units group:** -	**Unit selection:** -
Not for motor type: -	**Scaling:** -	**Expert list:** 1
Min	**Max**	**Factory setting**
-	-	1

Description: Sets the signal source for the feedback signal "brake open".

For motor holding brakes with feedback signal, the signal "brake open" can be activated using p1275.5 = 1.

Dependency: Refer to: p1222, p1275

Note: 1 signal: Brake open.

When braking with 1 feedback signal, the inverted feedback signal is connected to the BICO input for the second feedback signal (p1222).

© Siemens AG 2012 All Rights Reserved

p1224[0...3] BI: Close motor holding brake at standstill / Brk close standst

VECTOR_G (Extended brk)

Can be changed: T	**Calculated:** -	**Access level:** 2
Data type: Unsigned32 / Binary	**Dynamic index:** -	**Func. diagram:** 2704
P-Group: Functions	**Units group:** -	**Unit selection:** -
Not for motor type: -	**Scaling:** -	**Expert list:** 1
Min	**Max**	**Factory setting**
-	-	0

Description: Sets the signal source for close brake at standstill.

Dependency: Refer to: p1275

Note: [0]: Signal, close brake at standstill, inversion via p1275.2
[1]: Signal, close brake at standstill, inversion via p1275.3
[2]: Signal, close brake at standstill
[3]: Signal, close brake at standstill
These four signals form an OR logic operation.

p1225 CI: Standstill detection, threshold value / Standstill thresh

VECTOR_G (Extended brk)

Can be changed: T	**Calculated:** -	**Access level:** 2
Data type: Unsigned32 / FloatingPoint32	**Dynamic index:** -	**Func. diagram:** 2704
P-Group: Functions	**Units group:** -	**Unit selection:** -
Not for motor type: -	**Scaling:** p2000	**Expert list:** 1
Min	**Max**	**Factory setting**
-	-	63[0]

Description: Sets the signal source "threshold value" for the standstill identification.

Dependency: Refer to: p1226, p1228, r1229

p1226[0...n] Threshold for zero speed detection / n_standst n_thresh

VECTOR_G

Can be changed: U, T	**Calculated:** -	**Access level:** 2
Data type: FloatingPoint32	**Dynamic index:** DDS, p0180	**Func. diagram:** 2701, 2704
P-Group: Functions	**Units group:** 3_1	**Unit selection:** p0505
Not for motor type: -	**Scaling:** -	**Expert list:** 1
Min	**Max**	**Factory setting**
0.00 [rpm]	210000.00 [rpm]	20.00 [rpm]

Description: Sets the speed threshold for the standstill identification.
Acts on the actual value and setpoint monitoring.
When braking with OFF1 or OFF3, when the threshold is undershot, standstill is identified.
The following applies when the brake control is activated:
When the threshold is undershot, the brake control is started and the system waits for the brake closing time in p1217. The pulses are then suppressed.
if the brake control is not activated, the following applies:
When the threshold is undershot, the pulses are suppressed and the drive coasts down.

Dependency: Refer to: p1215, p1216, p1217, p1227

Notice: For reasons relating to the compatibility to earlier firmware versions, a parameter value of zero in indices 1 to 31 is overwritten with the parameter value in index 0 when the Control Unit boots.

Note: Standstill is identified in the following cases:
- the speed actual value falls below the speed threshold in p1226 and the time started after this in p1228 has expired.
- the speed setpoint falls below the speed threshold in p1226 and the time started after this in p1227 has expired.
The actual value sensing is subject to measuring noise. For this reason, standstill cannot be detected if the speed threshold is too low.

© Siemens AG 2012 All Rights Reserved

p1227 Zero speed detection monitoring time / n_standst t_monit

VECTOR_G

Can be changed: U, T	**Calculated:** -	**Access level:** 2
Data type: FloatingPoint32	**Dynamic index:** -	**Func. diagram:** 2701, 2704
P-Group: Functions	**Units group:** -	**Unit selection:** -
Not for motor type: -	**Scaling:** -	**Expert list:** 1
Min	**Max**	**Factory setting**
0.000 [s]	300.000 [s]	4.000 [s]

Description: Sets the monitoring time for the standstill identification.

When braking with OFF1 or OFF3, standstill is identified after this time has expired, after the setpoint speed has fallen below p1226 (also refer to p1145).

After this, the brake control is started, the system waits for the closing time in p1217 and then the pulses are suppressed.

Dependency: Refer to: p1215, p1216, p1217, p1226

Notice: For p1145 > 0.0 (RFG tracking) the setpoint is not equal to zero dependent on the selected value. This can therefore cause the monitoring time in p1227 to be exceeded. In this case, for a driven motor, the pulses are not suppressed.

Note: Standstill is identified in the following cases:

- the speed actual value falls below the speed threshold in p1226 and the time started after this in p1228 has expired.

- the speed setpoint falls below the speed threshold in p1226 and the time started after this in p1227 has expired.

For p1227 = 300.000 s, the following applies:

Monitoring is de-activated.

For p1227 = 0.000 s, the following applies:

With OFF1 or OFF3 and a ramp-down time = 0, the pulses are immediately suppressed and the motor "coasts" down.

p1228 Pulse suppression delay time / Pulse suppr t_del

VECTOR_G

Can be changed: U, T	**Calculated:** -	**Access level:** 2
Data type: FloatingPoint32	**Dynamic index:** -	**Func. diagram:** 2701, 2704
P-Group: Functions	**Units group:** -	**Unit selection:** -
Not for motor type: -	**Scaling:** -	**Expert list:** 1
Min	**Max**	**Factory setting**
0.000 [s]	299.000 [s]	0.000 [s]

Description: Sets the delay time for pulse suppression.

After OFF1 or OFF3, the pulses are canceled, if at least one of the following conditions is fulfilled:

- the speed actual value falls below the threshold in p1226 and the time started after this in p1228 has expired.

- the speed setpoint falls below the threshold in p1226 and the time started after this in p1227 has expired.

Dependency: Refer to: p1226, p1227

Notice: When the motor holding brake is activated, pulse cancellation is additionally delayed by the brake closing time (p1217).

r1229.1...11 CO/BO: Motor holding brake status word / Brake ZSW

VECTOR_G (Extended brk)

Can be changed: -	**Calculated:** -	**Access level:** 2
Data type: Unsigned32	**Dynamic index:** -	**Func. diagram:** -
P-Group: Functions	**Units group:** -	**Unit selection:** -
Not for motor type: -	**Scaling:** -	**Expert list:** 1
Min	**Max**	**Factory setting**
-	-	-

Description: Displays the status word for the motor holding brake.

Bit field:

Bit	Signal name	1 signal	0 signal	FP
01	Command open brake (continuous signal)	Yes	No	2711
03	Pulse enable, extended brake control	Yes	No	2711
04	Brake does not open	Yes	No	2711

© Siemens AG 2012 All Rights Reserved

05	Brake does not close	Yes	No	2711
06	Brake threshold exceeded	Yes	No	2707
07	Brake threshold undershot	Yes	No	2704
08	Brake monitoring time expired	Yes	No	2704
09	Pulse enable request missing/n_ctrl inhibited	Yes	No	2707
10	Brake OR logic operation result	Yes	No	2707
11	Brake AND logic operation result	Yes	No	2707

p1230[0...n] BI: Armature short-circuit / DC braking activation / ASC/DCBRK act

VECTOR_G

Can be changed: U, T | **Calculated:** - | **Access level:** 1

Data type: Unsigned32 / Binary | **Dynamic index:** CDS, p0170 | **Func. diagram:** 7014, 7016, 7017

P-Group: Functions | **Units group:** - | **Unit selection:** -

Not for motor type: - | **Scaling:** - | **Expert list:** 1

Min	Max	Factory setting
-	-	0

Description: Sets the signal source to activate the armature short-circuit or DC braking.

Dependency: Refer to: p1231, p1232, p1233, p1234, p1235, p1236, p1237, r1238, r1239, p1345, p1346

Note: 1 signal: Armature short-circuit/DC braking activated.

0 signal: Armature short-circuit/DC braking de-activated.

p1231[0...n] Armature short-circuit / DC braking configuration / ASC/DCBRK config

VECTOR_G

Can be changed: U, T | **Calculated:** - | **Access level:** 1

Data type: Integer16 | **Dynamic index:** MDS, p0130 | **Func. diagram:** 7014, 7016, 7017

P-Group: Functions | **Units group:** - | **Unit selection:** -

Not for motor type: - | **Scaling:** - | **Expert list:** 1

Min	Max	Factory setting
0	14	0

Description: Setting to activate the various types for armature short-circuit / DC braking.

Value:
- 0: No function
- 1: External armature short-circuit with contactor feedback signal
- 2: Ext. armature short circuit without contactor feedback signal
- 3: Internal voltage protection
- 4: Internal armature short-circuit / DC braking
- 5: DC braking for OFF1/OFF3
- 14: DC braking below starting speed

Dependency: Refer to: p0300, p1230, p1232, p1233, p1234, p1235, p1236, p1237, r1238, r1239, p1345, p1346

Danger:

Re p1231 = 1, 2:

- only short-circuit-proof motors may be used, or suitable resistors must be used to short-circuit the motor

Re p1231 = 3:

- when the internal voltage protection is active, after pulse suppression, all of the motor terminals are at half of the DC link voltage (without an internal voltage protection, the motor terminals are at zero potential)!
- it is only permissible to use motors that are short-circuit proof (p0320 < p0323).
- The Motor Module must be able to conduct 180% short-circuit current (r0320) of the motor (r0209).
- the internal voltage protection cannot be interrupted due to a fault response. If an overcurrent condition occurs during the active, internal voltage protection, then this can destroy the Motor Module and/or the motor.
- if the Motor Module does not support the autonomous, internal voltage protection (r0192.10 = 0), in order to ensure safe, reliable functioning when the line supply fails, an external 24 V power supply (UPS) must be used for the components.
- if the Motor Module does support the autonomous, internal voltage protection (r0192.10 = 1), in order to ensure safe, reliable functioning when the line supply fails, the 24 V power supply for the components must be provided through a Control Supply Module.
- if the internal voltage protection is active, it is not permissible that the motor is driven by the load for a longer period of time (e.g. as a result of loads that move the motor or another coupled motor).

© Siemens AG 2012 All Rights Reserved

Re p1231 = 4 and synchronous motor:

- when armature short-circuit is active, all of the motor terminals are at half of the DC link potential.
- it is only permissible to use motors that are short-circuit proof (p0320 < p0323).
- The Motor Module must be able to conduct 180% short-circuit current (r0320) of the motor (r0209).

Note: Re p1231 = 1, 2:

The external armature short circuit can only be selected for synchronous motors (p0300). In this case, control bit BO: r1239.0 must be interconnected (e.g. to a digital input) to control the external contactor.

The external armature short circuit cannot be set as a fault response. It can be triggered via binector input p1230. It is also always activated in the case of pulse suppression.

Re p1231 = 3:

Internal voltage protection (using an internal armature short circuit) can only be selected for synchronous motors (p0300) and Motor Modules in booksize or chassis format. Further, it is not permissible for Safety Integrated to be active on blocksize Motor Modules (i.e. p9501 = 0 and p9601 = 0). The internal voltage protection prevents the DC link capacitance from being charged if there is no possibility of regenerating the EMF of a motor operated in the field-weakening mode. The Motor Module must support this function (r0192.9 = 1).

a) If the Motor Module does not support the autonomous, internal armature short-circuit (r0192.10 = 0), the armature short-circuit is activated as soon as the activation criterion is fulfilled (refer below):

b) If the Motor Module supports the autonomous internal voltage protection (r0192.10 = 1), then the Motor Module itself decides - using the DC link voltage - as to whether the short-circuit should be activated. In this case, protection is also provided even if the DRIVE-CLiQ connection between the Control Unit and Motor Module was interrupted. The short circuit is activated if the DC link voltage exceeds 800 V. If the DC link voltage falls below 450 V, then the short-circuit is withdrawn. This therefore ensures that the required input voltage for the Control Supply Module is maintained.

For chassis units, the following applies:

The value for the voltage limits is calculated, depending on the voltage class, from EEPROM data of the particular power unit and a factor.

Re p1231 = 4:

The function is activated as soon as the activation criterion is fulfilled.

- the function can be superseded by OFF2

a) For synchronous motors (p0300 = 2xx, 4xx), the internal armature short-circuit is initiated.

- the Motor Module must support this function (r0192.9 = 1).

b) For induction motors (p0300 = 1xx), the DC braking is initiated.

Activation criterion (one of the following criteria is fulfilled):

- binector input p1230 = 1 signal (DC braking activation).
- the drive is not in the state "S4: Operation" or in S5x (refer to function diagram 2610).
- the internal pulse enable is missing (r0046.19 = 0).

Re p1231 = 5:

DC braking can only be set for induction motors.

DC braking is activated if the OFF1 or OFF3 command is present. Binector input p1230 is ineffective. If the drive speed still lies above the speed threshold p1234, then initially, the drive is ramped-down to this threshold, demagnetized (see p0347) and is then switched into DC braking for the time set in p1233. After this, the drive is switched-off. If, at OFF1/OFF3, the drive speed is below p1234, then it is immediately demagnetized and switched into DC braking. A change is made into normal operation if the OFF1 command is withdrawn prematurely.

DC braking by means of fault response continues to be possible.

Re p1231 = 14:

DC braking can only be set for induction motors.

DC braking is initiated if binector input p1230 = 1 during operation and the actual speed is below the starting speed p1234 (before this, the drive must have operated above p1234 plus the hysteresis). Then, following upstream demagnetization (see p0347), the braking current p1232 is injected for the time set in p1233. The drive then changes into normal operation. During braking the command for DC braking can be withdrawn. If the time p1233 is exceeded, then DC braking is inhibited and the drive changes into normal operation.

For OFF1 and OFF3, DC braking is only executed, if binector input p1230 = 1 signal.

DC braking by means of fault response continues to be possible.

Re p1231 = 3, 4, 5, 14:

The value can only be changed to values not equal to 3, 4, 5 or 14 if p0491 is not equal to 4 and p2101 is not equal to 6 (armature short-circuit/DC braking not set).

© Siemens AG 2012 All Rights Reserved

Note:
ASC: Armature Short Circuit
CSM: Control Supply Module
DCBRK: DC Braking
IVP: Internal Voltage Protection
UPS: Uninterruptible Power Supply

p1232[0...n] DC braking, braking current / DCBRK I_brake

VECTOR_G	**Can be changed:** U, T	**Calculated:** CALC_MOD_ALL	**Access level:** 1
	Data type: FloatingPoint32	**Dynamic index:** MDS, p0130	**Func. diagram:** 7017
	P-Group: Functions	**Units group:** -	**Unit selection:** -
	Not for motor type: PEM, REL, FEM	**Scaling:** -	**Expert list:** 1
	Min	**Max**	**Factory setting**
	0.00 [Arms]	10000.00 [Arms]	0.00 [Arms]

Description: Sets the braking current for DC braking.

Dependency: Refer to: p1230, p1231, p1233, p1234, r1239, p1345, p1346

Note: A change to the braking current becomes effective the next time that DC braking is switched on.

The value for p1232 is specified as an rms value in the 3-phase system. The magnitude of the braking current is the same as that of an identical output current at frequency zero (see r0067, r0068, p0640). The braking current is internally limited to r0067.

For the current controller, the settings of parameters p1345 and p1346 (I_max limiting controller) are used.

p1233[0...n] DC braking time / DCBRK time

VECTOR_G	**Can be changed:** U, T	**Calculated:** -	**Access level:** 1
	Data type: FloatingPoint32	**Dynamic index:** MDS, p0130	**Func. diagram:** 7017
	P-Group: Functions	**Units group:** -	**Unit selection:** -
	Not for motor type: PEM, REL, FEM	**Scaling:** -	**Expert list:** 1
	Min	**Max**	**Factory setting**
	0.0 [s]	3600.0 [s]	1.0 [s]

Description: Sets the DC braking time (as fault response).

Dependency: Refer to: p1230, p1231, p1232, p1234, r1239

Note: The time set is also effective when parameterizing DC braking as fault response.

If a speed encoder is being used, DC braking is ended as soon as the drive falls below the standstill threshold (p1226).

p1234[0...n] Speed at the start of DC braking / DCBRK n_start

VECTOR_G	**Can be changed:** U, T	**Calculated:** -	**Access level:** 1
	Data type: FloatingPoint32	**Dynamic index:** MDS, p0130	**Func. diagram:** 7017
	P-Group: Functions	**Units group:** -	**Unit selection:** -
	Not for motor type: PEM, REL, FEM	**Scaling:** -	**Expert list:** 1
	Min	**Max**	**Factory setting**
	0.00 [rpm]	210000.00 [rpm]	40000.00 [rpm]

Description: Sets the starting speed for DC braking.

If the actual speed falls below this threshold, then DC braking is activated.

Dependency: Refer to: p1230, p1231, p1232, p1233, r1239

Caution: If an encoder fault occurs during closed-loop operation with an encoder, controlled deceleration of the drive down to the start speed p1234 is no longer possible. In this case, DC braking is activated immediately and injects the braking current p1232 for the braking time p1233 after de-magnetizing. The braking current and braking duration must, therefore, be dimensioned accordingly for this situation so that the drive can be decelerated to standstill.

In the case of operation with an encoder, this speed may not be set too low so as ensure that the oscillation movement induced by the residual flux/remanence of the motor does not cause DC braking to be de-activated again.

© Siemens AG 2012 All Rights Reserved

p1235[0...n] BI: External armature short-circuit, contactor feedback signal / ASC ext feedback

VECTOR_G	**Can be changed:** T	**Calculated:** -	**Access level:** 1
	Data type: Unsigned32 / Binary	**Dynamic index:** CDS, p0170	**Func. diagram:** -
	P-Group: Functions	**Units group:** -	**Unit selection:** -
	Not for motor type: -	**Scaling:** -	**Expert list:** 1
	Min	**Max**	**Factory setting**
	-	-	0

Description: Sets the signal source for the contactor feedback signal for external armature short-circuit.

Dependency: Refer to: p1230, p1231, p1236, p1237, r1239

Notice: In order that the pulses are not enabled when the contactor is closed, the contactor feedback signal must lag by a sufficiently long time when opening the contactor.

Note: 1 signal: The contactor is closed.
0 signal: The contactor is open.

p1236[0...n] Ext. armature short-cct., contactor feedback signal monit. time / ASC ext t_monit

VECTOR_G	**Can be changed:** U, T	**Calculated:** -	**Access level:** 1
	Data type: FloatingPoint32	**Dynamic index:** MDS, p0130	**Func. diagram:** -
	P-Group: Functions	**Units group:** -	**Unit selection:** -
	Not for motor type: -	**Scaling:** -	**Expert list:** 1
	Min	**Max**	**Factory setting**
	0 [ms]	1000 [ms]	200 [ms]

Description: Sets the monitoring time of the contactor feedback signal for the external armature short-circuit configuration.
If the contactor feedback signal (p1235) is parameterized, then the appropriate feedback signal (r1239.1) is expected within this monitoring time after either opening or closing the contactor.

Dependency: Refer to: p1230, p1231, p1235, p1237, r1239
Refer to: A07904, F07905

p1237[0...n] External armature short-circuit, delay time when opening / ASC ext t_wait

VECTOR_G	**Can be changed:** U, T	**Calculated:** -	**Access level:** 1
	Data type: FloatingPoint32	**Dynamic index:** MDS, p0130	**Func. diagram:** -
	P-Group: Functions	**Units group:** -	**Unit selection:** -
	Not for motor type: -	**Scaling:** -	**Expert list:** 1
	Min	**Max**	**Factory setting**
	0 [ms]	1000 [ms]	200 [ms]

Description: Sets the delay time when opening the contactor of the external armature short-circuit.
If no contactor feedback signal has been selected (p1235), then the system waits for this time before the pulses are switched in.

Dependency: Refer to: p1230, p1231, p1235, p1236, r1239

Notice: This delay time must be at least long enough so that the contactor contacts reliably open before the pulses are switched in. The delay time must be greater than the contactor response time. The Motor Module can be damaged if the delay time is too short.

r1238 CO: Armature short-circuit, external state / EASC state

VECTOR_G	**Can be changed:** -	**Calculated:** -	**Access level:** 1
	Data type: Integer16	**Dynamic index:** -	**Func. diagram:** 2610
	P-Group: Functions	**Units group:** -	**Unit selection:** -
	Not for motor type: ASM	**Scaling:** -	**Expert list:** 1
	Min	**Max**	**Factory setting**
	0	6	-

Description: Displays the state for the external armature short-circuit.

Value:
0: Switched off
1: Ready
2: Active

© Siemens AG 2012 All Rights Reserved

3: Active - feedback signal "Closed" OK
4: Active - feedback signal "Closed" missing
5: Prompt to remove the armature short-circuit
6: Active - feedback signal "Open" missing

Dependency: Refer to: p1230, p1231, p1235, p1236, p1237, r1239

Refer to: A07904, F07905

Note: Activation criterion (one of the following criteria is fulfilled):

- the signal at BI: p1230 (armature short-circuit activation) is 0.
- the drive is not in the state "S4: Operation" or in S5x (refer to function diagram 2610).
- the internal pulse enable is missing (r0046.19 = 0).

Re state "switched out" (r1238 = 0):

- the external armature short-circuit can be selected with p1231 = 1.

Re state "ready" (r1238 = 1):

- as soon as the activation criterion is fulfilled, then a transition is made into the state "active" (r1238 = 2).

Regarding the state "active" (r1238 = 2), "active - feedback signal "Closed" OK" (r1238 = 3)", "active - feedback signal "Closed" missing" (r1238 = 4)":

- the control signal to close contactor r1239.0 is set to "1" (closed) and the pulses are suppressed.
- if a contactor feedback signal is not connected (BI: p1235 = 0 signal), then a transition is immediately made into state 3.
- if a contactor feedback signal is connected, then a transition is made into state 3 if the feedback signal at BI: p1235 goes to "1" (closed) within the monitoring time (p1236).
- otherwise, a transition is made into state 4.

Re state "prompt to remove the armature short-circuit" (r1238 = 5):

- the activation criterion is no longer fulfilled. An attempt is made to again remove the armature short circuit.
- the control signal to close the contactor r1239.0 is set to "0" (open) and the pulses remain suppressed.
- if a contactor feedback signal is not connected (BI: p1235 = 0 signal), the system waits for the delay time (p1237) to expire until a transition is made into state 1.
- if a contactor feedback signal is connected, the system waits until the feedback signal at BI:p1235 goes to "0" (open) until a transition is made into state 1. If this does not occur within the monitoring time (p1236), then a transition is made into state 6.

Re state "active - feedback signal "Open" missing" (r1238 = 6):

- this error state can be exited by de-selecting the external armature short-circuit (p1231 = 0).

r1239.0...13 CO/BO: Armature short-circuit / DC braking status word / ASC/DCBRK ZSW

VECTOR_G

Can be changed: -	**Calculated:** -	**Access level:** 1
Data type: Unsigned32	**Dynamic index:** -	**Func. diagram:** -
P-Group: Functions	**Units group:** -	**Unit selection:** -
Not for motor type: -	**Scaling:** -	**Expert list:** 1
Min	**Max**	**Factory setting**
-	-	-

Description: Displays the status word for armature short-circuit.

Bit field:

Bit	Signal name	1 signal	0 signal	FP
00	External armature short-circuit	Active	Inactive	-
01	External armature short-circuit, contactor feedback signal	Closed	Open	-
02	External armature short-circuit ready	Yes	No	-
03	External armature short-circuit with contactor feedback signal	Yes	No	-
04	Internal armature short-circuit	Active	Inactive	-
05	Internal armature short circuit, feedback signal from power unit	Active	Inactive	-
06	Internal armature short-circuit ready	Yes	No	-
08	DC braking active	Yes	No	7017
10	DC braking ready	Yes	No	7017
11	Armature short circuit/DC braking selected	Yes	No	-
12	DC braking selection internally inhibited	Yes	No	-
13	DC braking for OFF1/OFF3	Yes	No	-

© Siemens AG 2012 All Rights Reserved

Dependency: Refer to: p1230, p1231, p1232, p1233, p1234, p1235, p1236, p1237

Note: External armature short-circuit (bits 0 ... 3):

Re bit 00:

Using this signal, the motor is short-circuited through an external contactor circuit. This means that this BO: p1239.0 must be interconnected e.g. to a digital output.

Re bit 01:

This signal indicates the state of the contactor to establish the armature short-circuit. To do this, BI: p1235 must be interconnected to a digital input.

Re bit 02:

The external armature short-circuit configuration is ready and is activated as soon as the activation criterion is fulfilled.

Re bit 03:

1: A feedback signal from an external contactor was parameterized in BI: p1235.

Internal voltage protection / internal armature short-circuit (bits 4 ... 6):

Re bit 04:

a) Internal voltage protection (p1231 = 3) was selected and the Motor Module does not support the autonomous internal voltage protection (r0192.10 = 0).

The Control Unit issues the command to the Motor Module to short-circuit the motor through the power semiconductors.

a) Internal voltage protection (p1231 = 3) was selected and the Motor Module supports the autonomous internal voltage protection (r0192.10 = 1).

The Motor Module decides autonomously whether the armature short-circuit is activated. In this case, the following applies: r1239.4 = r1239.5.

c) Internal armature short-circuit (p1231 = 4) was selected.

The Control Unit issues the command to the Motor Module to short-circuit the motor through the power semiconductors.

Re bit 05:

The Motor Module signals that the motor is short-circuited in the Motor Module through the power semiconductors.

Re bit 06:

a) Internal voltage protection (p1231 = 3) was selected and the Motor Module does not support the autonomous internal voltage protection (r0192.10 = 0).

The internal voltage protection is ready and is activated as soon as the activation criterion is fulfilled.

a) Internal voltage protection (p1231 = 3) was selected and the Motor Module supports the autonomous internal voltage protection (r0192.10 = 1).

The internal voltage protection is ready and the Motor Module decides autonomously - using the DC link voltage - whether the short-circuit is activated. In this case, protection is also provided even if the DRIVE-CLiQ connection between the Control Unit and Motor Module was interrupted. The short-circuit is activated if the DC link voltage exceeds 800 V. If the DC link voltage falls below 450 V, then the short-circuit is withdrawn.

c) Internal armature short-circuit (p1231 = 4) was selected.

The internal armature short-circuit is ready and is activated as soon as the activation criterion is fulfilled.

Activation criterion (one of the following criteria is fulfilled):

- the signal at BI: p1230 (armature short-circuit activation) is 1.
- the drive is not in the state "S4: Operation" or in S5x (refer to function diagram 2610).
- the internal pulse enable is missing (r0046.19 = 0).

Re bit 12, 13:

Only effective for p1231 = 14.

p1240[0...n] Vdc controller or Vdc monitoring configuration / Vdc_ctrl config

VECTOR_G (n/M)

Can be changed: U, T	**Calculated:** -	**Access level:** 3
Data type: Integer16	**Dynamic index:** DDS, p0180	**Func. diagram:** 6220
P-Group: Functions	**Units group:** -	**Unit selection:** -
Not for motor type: REL	**Scaling:** -	**Expert list:** 1
Min	**Max**	**Factory setting**
0	6	1

Description: Sets the controller configuration of the DC link voltage (Vdc controller) in the closed-loop control mode.

© Siemens AG 2012 All Rights Reserved

Value:
0: Inhib Vdc ctrl
1: Vdc_max controller enable
2: Vdc_min controller (kinetic buffering) enable
3: Vdc_min controller and Vdc_max controller enable
4: Activates Vdc_max monitoring
5: Activates Vdc_min monitoring
6: Activates Vdc_min monitoring and Vdc_max monitoring

Dependency: Refer to: p1245

Refer to: A07400, A07401, A07402, F07403, F07404, F07405, F07406

Warning: When the Udc max controller is active, the motor can accelerate, e.g. for driving loads or for high DC link voltages caused by other drives that are connected to the common DC link busbar.

Caution: If several drives are operated from the same DC link busbar, then it is recommended that the Udc control is only activated for the drives with high moments of inertia. If the Udc controls for various drives are simultaneously active, then they can mutually influence one another. In this case, the controller dynamic performance should be reduced or the Udc control of individual drives should be deactivated.

Drives with Udc control must be able to brake and accelerate independently of one another.

Notice: An excessively high value in p1245 can possibly negatively influence the normal operation of the drive.

Note: p1240 = 1, 3:

When the DC link voltage limit specified for the Motor Module is reached the following applies:

- the Vdc_max controller limits the regenerative energy in order that the DC link voltage is kept below the maximum DC link voltage when braking.

- the ramp-down times are automatically increased.

p1240 = 2, 3:

When the switch-in threshold of the Vdc_min controller is reached (p1245), the following applies:

- the Vdc_min controller limits the energy taken from the DC link in order to keep the DC link voltage above the minimum DC link voltage when accelerating.

- the motor is braked in order to use its kinetic energy to buffer the DC link.

p1240 = 4, 5, 6:

When the threshold in r1242 or r1246 is reached, the DC link voltage monitoring initiates a fault (F07403 or F07404) with a response and therefore reduces additional negative effects on the DC link voltage.

If a braking resistor is connected to the DC link, then the Vdc_max control should be disabled. See also p1531.

r1242 Vdc_max controller switch-in level / Vdc_max on_level

VECTOR_G (n/M)	**Can be changed:** -	**Calculated:** -	**Access level:** 3
	Data type: FloatingPoint32	**Dynamic index:** -	**Func. diagram:** 6220
	P-Group: Functions	**Units group:** -	**Unit selection:** -
	Not for motor type: REL	**Scaling:** p2001	**Expert list:** 1
	Min	**Max**	**Factory setting**
	- [V]	- [V]	- [V]

Description: Displays the switch-in level for the Vdc_max controller.

If p1254 = 0 (automatic sensing of the switch-in level = off), then the following applies:

AC/AC device: r1242 = 1.15 * sqrt(2) * p0210

DC/AC device: r1242 = 1.15 * p0210

If p1254 = 1 (automatic sensing of the switch-in level = on), then the following applies:

r1242 = Vdc_max - 50.0 V (Vdc_max: Overvoltage threshold of the power unit)

r1242 = Vdc_max - 25.0 V (for 230 V power units)

Note: The Vdc_max controller is not switched back off until the DC-link voltage falls below the threshold 0.95 * p1242 and the controller output is zero.

© Siemens AG 2012 All Rights Reserved

p1243[0...n] Vdc_max controller dynamic factor / Vdc_max dyn_factor

VECTOR_G (n/M)

Can be changed: U, T	**Calculated:** CALC_MOD_CON	**Access level:** 3
Data type: FloatingPoint32	**Dynamic index:** DDS, p0180	**Func. diagram:** 6220
P-Group: Functions	**Units group:** -	**Unit selection:** -
Not for motor type: REL	**Scaling:** -	**Expert list:** 1
Min	**Max**	**Factory setting**
1 [%]	10000 [%]	100 [%]

Description: Sets the dynamic factor for the DC link voltage controller (Vdc_max controller).

100% means that p1250, p1251, and p1252 (gain, integral time, and rate time) are used corresponding to their basic settings and based on a theoretical controller optimization.

If subsequent optimization is required, this can be carried out using the dynamic factor. In this case p1250, p1251, p1252 are weighted with the dynamic factor p1243.

If several modules are connected to the DC link, then the dynamic factor must be increased corresponding to the ratio of the additional capacitances to the capacitance of the module involved.

Note: The pre-setting of the dynamic factor is based on the power units connected to DRIVE-CLiQ. It is assumed that the power units connected via DRIVE-CLiQ are also electrically connected to the DC link. If this is not the case, then the dynamic factor must be optimized manually.

p1245[0...n] Vdc_min controller switch-in level (kinetic buffering) / Vdc_min on_level

VECTOR_G (n/M)

Can be changed: U, T	**Calculated:** -	**Access level:** 3
Data type: FloatingPoint32	**Dynamic index:** DDS, p0180	**Func. diagram:** -
P-Group: Functions	**Units group:** -	**Unit selection:** -
Not for motor type: REL	**Scaling:** -	**Expert list:** 1
Min	**Max**	**Factory setting**
65 [%]	150 [%]	76 [%]

Description: Sets the switch-in level for the Vdc-min controller (kinetic buffering).

The value is obtained as follows:

AC/AC device: r1246[V] = p1245[%] * sqrt(2) * p0210

DC/AC device: r1246[V] = p1245[%] * p0210

Dependency: Refer to: p0210

Warning: An excessively high value may adversely affect normal drive operation. The values up to 150 % are intended for operating modes p1240 = 5, 6.

Note: For SINAMICS GM/SM, the following applies:

Minimum value = 0.75, Maximum value = 0.90

r1246 Vdc_min controller switch-in level (kinetic buffering) / Vdc_min on_level

VECTOR_G (n/M)

Can be changed: -	**Calculated:** -	**Access level:** 3
Data type: FloatingPoint32	**Dynamic index:** -	**Func. diagram:** 6220
P-Group: Functions	**Units group:** -	**Unit selection:** -
Not for motor type: REL	**Scaling:** p2001	**Expert list:** 1
Min	**Max**	**Factory setting**
- [V]	- [V]	- [V]

Description: Displays the switch-in level for the Vdc_min controller (kinetic buffering).

Note: The Vdc_min controller is not switched back off until the DC-link voltage rises above the threshold 1.05 * p1246 and the controller output is zero.

© Siemens AG 2012 All Rights Reserved

p1247[0...n] Vdc_min controller dynamic factor (kinetic buffering) / Vdc_min dyn_factor

VECTOR_G (n/M)	**Can be changed:** U, T	**Calculated:** CALC_MOD_CON	**Access level:** 3
	Data type: FloatingPoint32	**Dynamic index:** DDS, p0180	**Func. diagram:** 6220
	P-Group: Functions	**Units group:** -	**Unit selection:** -
	Not for motor type: REL	**Scaling:** -	**Expert list:** 1
	Min	**Max**	**Factory setting**
	1 [%]	10000 [%]	100 [%]

Description: Sets the dynamic factor for the Vdc_min controller (kinetic buffering).

100% means that p1250, p1251, and p1252 (gain, integral time, and rate time) are used corresponding to their basic settings and based on a theoretical controller optimization.

If subsequent optimization is required, this can be carried out using the dynamic factor. In this case p1250, p1251, p1252 are weighted with the dynamic factor p1247.

If several modules are connected to the DC link, then the dynamic factor must be increased corresponding to the ratio of the additional capacitances to the capacitance of the module involved.

p1249[0...n] Vdc_max controller speed threshold / Vdc_max n_thresh

VECTOR_G (n/M)	**Can be changed:** U, T	**Calculated:** CALC_MOD_ALL	**Access level:** 3
	Data type: FloatingPoint32	**Dynamic index:** DDS, p0180	**Func. diagram:** -
	P-Group: Functions	**Units group:** 3_1	**Unit selection:** p0505
	Not for motor type: REL	**Scaling:** -	**Expert list:** 1
	Min	**Max**	**Factory setting**
	0.00 [rpm]	210000.00 [rpm]	10.00 [rpm]

Description: Sets the lower speed threshold for the Vdc_max controller.

When this speed threshold is undershot, the Vdc_max control is switched out and the speed is controlled using the ramp-function generator.

Note: For fast braking where the ramp-function generator tracking was active, it is possible to prevent the drive rotating in the opposite direction by increasing the speed threshold and setting a final rounding-off time in the ramp-function generator (p1131). This is supported using a dynamic setting of the speed controller.

p1250[0...n] Vdc controller proportional gain / Vdc_ctrl Kp

VECTOR_G (n/M)	**Can be changed:** U, T	**Calculated:** -	**Access level:** 3
	Data type: FloatingPoint32	**Dynamic index:** DDS, p0180	**Func. diagram:** -
	P-Group: Functions	**Units group:** -	**Unit selection:** -
	Not for motor type: REL	**Scaling:** -	**Expert list:** 1
	Min	**Max**	**Factory setting**
	0.00	100.00	1.00

Description: Sets the proportional gain for the DC-link voltage controller (Vdc_min controller, Vdc_max controller).

Dependency: The effective proportional gain is obtained taking into account p1243 (Vdc_max controller dynamic factor).

Note: The gain factor is proportional to the capacitance of the DC link. The parameter is pre-set to a value that is optimally adapted to the capacitance of the individual Motor Module. The capacitances of the other power units, which are connected to the DC link, can be taken into account using the dynamic factor (p1247 or p1243).

p1251[0...n] Vdc controller integral time / Vdc_ctrl Tn

VECTOR_G (n/M)	**Can be changed:** U, T	**Calculated:** -	**Access level:** 3
	Data type: FloatingPoint32	**Dynamic index:** DDS, p0180	**Func. diagram:** 6220
	P-Group: Functions	**Units group:** -	**Unit selection:** -
	Not for motor type: REL	**Scaling:** -	**Expert list:** 1
	Min	**Max**	**Factory setting**
	0 [ms]	10000 [ms]	0 [ms]

Description: Sets the integral time for the DC-link voltage controller (Vdc_min controller, Vdc_max controller).

Dependency: The effective integral time is obtained taking into account p1243 (Vdc_max controller dynamic factor).

© Siemens AG 2012 All Rights Reserved

Note: An integral time is normally not required for single axis drives. For multi-axis drives on the other hand, it may be possible to compensate for interference from other axes using the integral time (integral component) .
p1251 = 0: The integral component is de-activated.

p1252[0...n] Vdc controller rate time / Vdc_ctrl t_rate

VECTOR_G (n/M)	**Can be changed:** U, T	**Calculated:** -	**Access level:** 3
	Data type: FloatingPoint32	**Dynamic index:** DDS, p0180	**Func. diagram:** 6220
	P-Group: Functions	**Units group:** -	**Unit selection:** -
	Not for motor type: REL	**Scaling:** -	**Expert list:** 1
	Min	**Max**	**Factory setting**
	0 [ms]	1000 [ms]	0 [ms]

Description: Sets the rate time constant for the DC-link voltage controller (Vdc_min controller, Vdc_max controller).
Dependency: The effective rate time is obtained taking into account p1243 (Vdc_max controller dynamic factor).

p1254 Vdc_max controller automatic ON level detection / Vdc_max SenseOnLev

VECTOR_G (n/M)	**Can be changed:** U, T	**Calculated:** -	**Access level:** 3
	Data type: Integer16	**Dynamic index:** -	**Func. diagram:** -
	P-Group: Functions	**Units group:** -	**Unit selection:** -
	Not for motor type: REL	**Scaling:** -	**Expert list:** 1
	Min	**Max**	**Factory setting**
	0	1	1

Description: Activates/de-activates the automatic sensing of the switch-in level for the Vdc_max controller.
Value:
0: Automatic detection inhibited
1: Automatic detection enabled

p1255[0...n] Vdc_min controller time threshold / Vdc_min t_thresh

VECTOR_G (n/M)	**Can be changed:** U, T	**Calculated:** -	**Access level:** 3
	Data type: FloatingPoint32	**Dynamic index:** DDS, p0180	**Func. diagram:** -
	P-Group: Functions	**Units group:** -	**Unit selection:** -
	Not for motor type: REL	**Scaling:** -	**Expert list:** 1
	Min	**Max**	**Factory setting**
	0.000 [s]	10000.000 [s]	0.000 [s]

Description: Sets the time threshold for the Vdc_min controller (kinetic buffering).
If this value is exceeded a fault is output; the required response can be parameterized.
Prerequisite: p1256 = 1
Dependency: Refer to: F07406
Notice: If a time threshold has been parameterized, the Vdc_max controller should also be activated (p1240 = 3) so that the drive does not shut down with overvoltage when Vdc_min control is exited (due to the time violation) and in the event of fault response OFF3. It is also possible to increase the OFF3 ramp-down time p1135.

p1256[0...n] Vdc_min controller response (kinetic buffering) / Vdc_min response

VECTOR_G (n/M)	**Can be changed:** U, T	**Calculated:** -	**Access level:** 3
	Data type: Integer16	**Dynamic index:** DDS, p0180	**Func. diagram:** -
	P-Group: Functions	**Units group:** -	**Unit selection:** -
	Not for motor type: REL	**Scaling:** -	**Expert list:** 1
	Min	**Max**	**Factory setting**
	0	1	0

Description: Sets the response for the Vdc_min controller (kinetic buffering).
Value:
0: Buffer Vdc until undervoltage, n<p1257 -> F07405
1: Buff. Vdc until undervolt., n<p1257 -> F07405, t>p1255 -> F07406
Dependency: Refer to: F07405, F07406

© Siemens AG 2012 All Rights Reserved

p1257[0...n] Vdc_min controller speed threshold / Vdc_min n_thresh

VECTOR_G (n/M)

Can be changed: U, T	**Calculated:** CALC_MOD_ALL	**Access level:** 3
Data type: FloatingPoint32	**Dynamic index:** DDS, p0180	**Func. diagram:** -
P-Group: Functions	**Units group:** 3_1	**Unit selection:** p0505
Not for motor type: REL	**Scaling:** -	**Expert list:** 1
Min	**Max**	**Factory setting**
0.00 [rpm]	210000.00 [rpm]	50.00 [rpm]

Description: Sets the speed threshold for the Vdc-min controller (kinetic buffering).

If this value is exceeded a fault is output; the required response can be parameterized .

r1258 CO: Vdc controller output / Vdc_ctrl output

VECTOR_G (n/M)

Can be changed: -	**Calculated:** -	**Access level:** 3
Data type: FloatingPoint32	**Dynamic index:** -	**Func. diagram:** 6220
P-Group: Functions	**Units group:** 6_2	**Unit selection:** p0505
Not for motor type: REL	**Scaling:** p2002	**Expert list:** 1
Min	**Max**	**Factory setting**
- [Arms]	- [Arms]	- [Arms]

Description: Displays the actual output of the Vdc controller (DC link voltage controller)

Note: The regenerative power limit p1531 is used for vector control to pre-control the Vdc_max controller. The lower the power limit is set, the lower the correction signals of the controller when the voltage limit is reached.

p1260 Bypass configuration / Bypass config

VECTOR_G (Tech_ctrl)

Can be changed: U, T	**Calculated:** -	**Access level:** 2
Data type: Integer16	**Dynamic index:** -	**Func. diagram:** -
P-Group: -	**Units group:** -	**Unit selection:** -
Not for motor type: -	**Scaling:** -	**Expert list:** 1
Min	**Max**	**Factory setting**
0	3	0

Description: Sets the configuration for the bypass function.

Value:
0: Bypass de-activated
1: Bypass with synchronization and overlap
2: Bypass with synchronization without overlap
3: Bypass without synchronization

Note: If the bypass function is selected ((p1260 > 0), then when the power unit restarts after POWER OFF, the state of the bypass switch is evaluated. This means that after the ramp-up, it is possible to directly change into the standby mode. This is only possible for p1267 = 1 (bypass using the control signal) and if the control command after the system has been booted is still available (p1266). This function has a higher priority than the automatic restart function (p1210).

The "bypass" function can only be switched off again (p1260 = 0) if the bypass is not active or the bypass function has a fault.

The corresponding function should be activated in p3800 for bypass with synchronization.

r1261.0...9 CO/BO: Bypass control/status word / Bypass STW / ZSW

VECTOR_G (Tech_ctrl)

Can be changed: -	**Calculated:** -	**Access level:** 2
Data type: Unsigned32	**Dynamic index:** -	**Func. diagram:** -
P-Group: -	**Units group:** -	**Unit selection:** -
Not for motor type: -	**Scaling:** -	**Expert list:** 1
Min	**Max**	**Factory setting**
-	-	-

Description: Control and feedback signals of the bypass switch.

Bit field:

Bit	Signal name	1 signal	0 signal	FP
00	Command switch motor - power unit	Close	Open	-
01	Command switch motor - line supply	Close	Open	-

© Siemens AG 2012 All Rights Reserved

02	Synchronization requested	Yes	No	-
03	Staging status	Active	Not active	-
05	Feedback signal switch motor - power unit	Closed	Opened	-
06	Feedback signal switch motor - line supply	Closed	Opened	-
07	Bypass command (from p1266)	Yes	No	-
08	Feedback signal synchronization completed (from p1268)	Yes	No	-
09	Staging requested (from p2369)	Yes	No	-

Dependency: Refer to: p2369

Note: Control bits 0 and 1 should be interconnected to the signal outputs via which the switches in the motor feeder cables should be controlled. These should be selected/dimensioned for switching under load.

p1262[0...n] Bypass dead time / Bypass t_dead

VECTOR_G (Tech_ctrl)

Can be changed: U, T	**Calculated:** CALC_MOD_REG	**Access level:** 2
Data type: FloatingPoint32	**Dynamic index:** DDS, p0180	**Func. diagram:** -
P-Group: -	**Units group:** -	**Unit selection:** -
Not for motor type: -	**Scaling:** -	**Expert list:** 1
Min	**Max**	**Factory setting**
0.000 [s]	20.000 [s]	1.000 [s]

Description: Sets the dead time for non-synchronized bypass.

Note: This parameter is used to define the changeover time of the contactors. It should not be shorter than the de-magnetizing time of the motor (p0347).

The total changeover time for the bypass is based on the total of p1262 plus the OFF time for the relevant switch (p1274[x]).

p1263 Debypass delay time / Debypass t_del

VECTOR_G (Tech_ctrl)

Can be changed: U, T	**Calculated:** -	**Access level:** 2
Data type: FloatingPoint32	**Dynamic index:** -	**Func. diagram:** -
P-Group: -	**Units group:** -	**Unit selection:** -
Not for motor type: -	**Scaling:** -	**Expert list:** 1
Min	**Max**	**Factory setting**
0.000 [s]	300.000 [s]	1.000 [s]

Description: Sets the delay time to switch back to converter operation for a non-synchronized bypass.

p1264 Bypass delay time / Bypass t_del

VECTOR_G (Tech_ctrl)

Can be changed: U, T	**Calculated:** -	**Access level:** 2
Data type: FloatingPoint32	**Dynamic index:** -	**Func. diagram:** -
P-Group: -	**Units group:** -	**Unit selection:** -
Not for motor type: -	**Scaling:** -	**Expert list:** 1
Min	**Max**	**Factory setting**
0.000 [s]	300.000 [s]	1.000 [s]

Description: Sets the delay time for switching to line operation for a non-synchronized bypass.

p1265 Bypass speed threshold / Bypass n_thresh

VECTOR_G (Tech_ctrl)

Can be changed: U, T	**Calculated:** -	**Access level:** 2
Data type: FloatingPoint32	**Dynamic index:** -	**Func. diagram:** -
P-Group: -	**Units group:** 3_1	**Unit selection:** p0505
Not for motor type: REL	**Scaling:** p2000	**Expert list:** 1
Min	**Max**	**Factory setting**
0.00 [rpm]	210000.00 [rpm]	1480.00 [rpm]

Description: Sets the speed threshold to activate the bypass.

Note: When selecting p1260 = 3 and p1267.1 = 1, the bypass is automatically activated when this speed is reached.

© Siemens AG 2012 All Rights Reserved

p1266 BI: Bypass, control command / Bypass command

VECTOR_G (Tech_ctrl)

Can be changed: U, T	**Calculated:** -	**Access level:** 3
Data type: Unsigned32 / Binary	**Dynamic index:** -	**Func. diagram:** -
P-Group: -	**Units group:** -	**Unit selection:** -
Not for motor type: -	**Scaling:** -	**Expert list:** 1
Min	**Max**	**Factory setting**
-	-	0

Description: Sets the signal source for the control command to the bypass.

p1267 Bypass changeover source configuration / Chngov_src config

VECTOR_G (Tech_ctrl)

Can be changed: U, T	**Calculated:** -	**Access level:** 2
Data type: Unsigned8	**Dynamic index:** -	**Func. diagram:** -
P-Group: -	**Units group:** -	**Unit selection:** -
Not for motor type: -	**Scaling:** -	**Expert list:** 1
Min	**Max**	**Factory setting**
-	-	0000 bin

Description: Sets the cause that should initiate the bypass.

Bit field:

Bit	Signal name	1 signal	0 signal	FP
00	Bypass via signal (BI: p1266)	Yes	No	-
01	Bypass via reaching the speed threshold	Yes	No	-

Note: The parameter only has an effect for a non-synchronized bypass.

p1267.0 = 1:

The bypass is initiated by setting a binary signal. When the command is reset, after the debypass delay time (p1263) has expired, operation at the power unit is re-selected.

p1267.1 = 1:

When the speed threshold entered in p1265 is reached, the bypass is switched in. The system only switches back when the speed setpoint again falls below the threshold value.

p1268 BI: Bypass, feedback synchronization completed / FS sync compl

VECTOR_G (Tech_ctrl)

Can be changed: U, T	**Calculated:** -	**Access level:** 3
Data type: Unsigned32 / Binary	**Dynamic index:** -	**Func. diagram:** -
P-Group: -	**Units group:** -	**Unit selection:** -
Not for motor type: -	**Scaling:** -	**Expert list:** 1
Min	**Max**	**Factory setting**
-	-	3819.2

Description: Sets the signal source for the feedback signal "synchronization completed" for the bypass function.

Dependency: Refer to: r3819

p1269[0...1] BI: Bypass switch feedback signal / Bypass FS

VECTOR_G (Tech_ctrl)

Can be changed: U, T	**Calculated:** -	**Access level:** 3
Data type: Unsigned32 / Binary	**Dynamic index:** -	**Func. diagram:** -
P-Group: -	**Units group:** -	**Unit selection:** -
Not for motor type: -	**Scaling:** -	**Expert list:** 1
Min	**Max**	**Factory setting**
-	-	0

Description: Sets the signal source for the feedback signal of the bypass switch.

Index: [0] = Switch motor/drive
[1] = Switch motor/line supply

Note: In the case of switches without a feedback signal, interconnect the corresponding control bit as the signal source:

BI: p1269[0] = r1261.0

BI: p1269[1] = r1261.1

© Siemens AG 2012 All Rights Reserved

p1272 Simulation mode / Simulation mode

VECTOR_G

Can be changed: T	**Calculated:** -	**Access level:** 3
Data type: Integer16	**Dynamic index:** -	**Func. diagram:** -
P-Group: Functions	**Units group:** -	**Unit selection:** -
Not for motor type: -	**Scaling:** -	**Expert list:** 1
Min	**Max**	**Factory setting**
0	1	0

Description: In the simulation mode, the closed-loop control or U/f control can be operated without motor.

The simulation mode is used to test the power unit. Even though the DC link voltage is missing, the pulses are enabled when powering up. The DC link pre-charging is bypassed and the undervoltage detection is disabled.

Closed-loop speed control with an encoder is possible if the torque setpoint (r0079) is used in order to operate a second drive in the closed-loop torque controlled mode.

Value:
0: OFF
1: ON

Dependency: The following functions are de-activated in the simulation mode:

- motor data identification routine
- motor data identification routine, rotating without encoder
- pole position identification

For U/f control and sensorless vector control, flying restart is not carried out (refer to p1200).

Refer to: r0192, p1900, p1910, p1960, p1990

Refer to: A07825, F07826

Notice: In simulation mode, binector output r0863.1 = 1 is set. This is why you need to check whether other devices are powered up via this signal before activating simulation mode. You might need to disconnect the corresponding BICO interconnection temporarily.

Note: Simulation mode is only possible for DC link voltages below 40 V. In order that the closed-loop control can be calculated, the displayed DC link voltage (r0026, r0070) is set to the rated DC link voltage (refer to p0210). Closed-loop current control and motor model are switched out (disabled) - the same is true for the speed controller for encoderless closed-loop speed control.

When fault messages occur, the parameter is not automatically reset. This function is not implemented for SINAMICS GM.

p1274[0...1] Bypass switch monitoring time / Switch t_monit

VECTOR_G (Tech_ctrl)

Can be changed: U, T	**Calculated:** -	**Access level:** 2
Data type: FloatingPoint32	**Dynamic index:** -	**Func. diagram:** -
P-Group: -	**Units group:** -	**Unit selection:** -
Not for motor type: -	**Scaling:** -	**Expert list:** 1
Min	**Max**	**Factory setting**
0 [ms]	5000 [ms]	1000 [ms]

Description: Sets the monitoring time for the bypass switch.

Index:
[0] = Switch motor/drive
[1] = Switch motor/line supply

Note: The monitoring is de-activated with p1274 = 0 ms.

The changeover time for the bypass (p1262) is extended by the value in this parameter.

p1275 Motor holding brake control word / Brake STW

VECTOR_G (Extended brk)

Can be changed: U, T	**Calculated:** -	**Access level:** 2
Data type: Unsigned32	**Dynamic index:** -	**Func. diagram:** -
P-Group: Functions	**Units group:** -	**Unit selection:** -
Not for motor type: -	**Scaling:** -	**Expert list:** 1
Min	**Max**	**Factory setting**
-	-	0000 0000 bin

Description: Sets the control word for the motor holding brake.

© Siemens AG 2012 All Rights Reserved

Bit field:	Bit	Signal name	1 signal	0 signal	FP
	00	Inverting BI: 1219[0]	Yes	No	2707
	01	Inverting BI: 1219[1]	Yes	No	2707
	02	Inverting BI: 1224[0]	Yes	No	2704
	03	Inverting BI: 1224[1]	Yes	No	2704
	05	Brake with feedback	Yes	No	2711

p1276 Motor holding brake, standstill detection, bypass / Brk standst bypass

VECTOR_G (Extended brk)

Can be changed: U, T	**Calculated:** -	**Access level:** 2
Data type: FloatingPoint32	**Dynamic index:** -	**Func. diagram:** 2704
P-Group: Functions	**Units group:** -	**Unit selection:** -
Not for motor type: -	**Scaling:** -	**Expert list:** 1
Min	**Max**	**Factory setting**
0.000 [s]	300.000 [s]	300.000 [s]

Description: Sets the delay time for closing the brake at standstill.

After this time has expired, if the "close brake at standstill" or OFF1/OFF3 is present, the brake is closed and the pulses are suppressed.

For p1276 = 300.000 s, the timer is de-activated - this means that the timer output is always zero.

p1277 Motor holding brake, braking threshold delay exceeded / Del thresh exceed.

VECTOR_G (Extended brk)

Can be changed: U, T	**Calculated:** -	**Access level:** 2
Data type: FloatingPoint32	**Dynamic index:** -	**Func. diagram:** 2707
P-Group: Functions	**Units group:** -	**Unit selection:** -
Not for motor type: -	**Scaling:** -	**Expert list:** 1
Min	**Max**	**Factory setting**
0.000 [s]	300.000 [s]	0.000 [s]

Description: Sets the delay time for the signal "braking threshold exceeded" (BO: r1229.6).

Dependency: Refer to: p1220, p1221, r1229

p1278 Brake control, diagnostics evaluation / Brake diagnostics

VECTOR_G

Can be changed: U, T	**Calculated:** -	**Access level:** 2
Data type: Integer16	**Dynamic index:** -	**Func. diagram:** -
P-Group: Functions	**Units group:** -	**Unit selection:** -
Not for motor type: -	**Scaling:** -	**Expert list:** 1
Min	**Max**	**Factory setting**
0	1	0

Description: Sets the brake control type (with or without diagnostics evaluation).

Example for brake control with diagnostics evaluation.

- brake control in the Motor Modules in booksize format
- Safe Brake Relay for AC Drive

Example for brake control without diagnostics evaluation.

- Brake Relay for AC Drive

Value:
0: Brake control with diagnostics evaluation
1: Brake control without diagnostics evaluation

Note: If the configuration of the motor holding brake (p1215) is set to "no holding brake present" when booting, then an automatic identification of the motor holding brake will be carried out. If a brake control is detected without diagnostics evaluation (e.g. Brake Relay for AC Drive), then the parameter is set to "brake control without diagnostics evaluation".

It is not permissible to parameterize "brake control without diagnostics evaluation" and also enable "safe brake control" (p1278 = 1, p9602 = 1, p9802 = 1).

© Siemens AG 2012 All Rights Reserved

p1279[0...3] BI: Motor holding brake, OR/AND logic operation / Brake OR AND

VECTOR_G (Extended brk)

Can be changed: T	**Calculated:** -	**Access level:** 2
Data type: Unsigned32 / Binary	**Dynamic index:** -	**Func. diagram:** 2707
P-Group: Functions	**Units group:** -	**Unit selection:** -
Not for motor type: -	**Scaling:** -	**Expert list:** 1
Min	**Max**	**Factory setting**
-	-	0

Description: Sets the signal source for the OR/AND logic operation.

Dependency: Refer to: r1229

Note: [0]: OR logic operation, input 1 --> the result is displayed in r1229.10.
[1]: OR logic operation, input 2 --> the result is displayed in r1229.10.
[2]: AND logic operation, input 1 --> the result is displayed in r1229.11.
[3]: AND logic operation, input 2 --> the result is displayed in r1229.11.

p1280[0...n] Vdc controller or Vdc monitoring configuration (U/f) / Vdc_ctr config U/f

VECTOR_G

Can be changed: U, T	**Calculated:** -	**Access level:** 3
Data type: Integer16	**Dynamic index:** DDS, p0180	**Func. diagram:** 1690, 6320
P-Group: Functions	**Units group:** -	**Unit selection:** -
Not for motor type: -	**Scaling:** -	**Expert list:** 1
Min	**Max**	**Factory setting**
0	6	1

Description: Sets the configuration of the controller for the DC link voltage (Vdc controller) in the U/f operating mode.

Value:
0: Inhib Vdc ctrl
1: Vdc_max controller enable
2: Vdc_min controller (kinetic buffering) enable
3: Vdc_min controller and Vdc_max controller enable
4: Activates Vdc_max monitoring
5: Activates Vdc_min monitoring
6: Activates Vdc_min monitoring and Vdc_max monitoring

Warning: When the Udc max controller is active, the motor can accelerate, e.g. for driving loads or for high DC link voltages caused by other drives that are connected to the common DC link busbar.

Caution: If several drives are operated from the same DC link busbar, then it is recommended that the Udc control is only activated for the drives with relatively high moments of inertia. If the Udc controls for various drives are simultaneously active, then they can mutually influence one another. In this case, the controller dynamic performance should be reduced or the Udc control of individual drives should be deactivated.

Drives with Udc control must be able to brake and accelerate independently of one another.

Note: p1240 = 4, 5, 6:

When the threshold in r1282 or r1286 is reached, the DC link voltage monitoring initiates a fault (F07403 or F07404) with a response and therefore reduces additional negative effects on the DC link voltage.

If a braking resistor is connected to the DC link, then the Vdc_max control should be disabled.

r1282 Vdc_max controller switch-in level (U/f) / Vdc_max on_level

VECTOR_G

Can be changed: -	**Calculated:** -	**Access level:** 3
Data type: FloatingPoint32	**Dynamic index:** -	**Func. diagram:** 6320
P-Group: Functions	**Units group:** -	**Unit selection:** -
Not for motor type: -	**Scaling:** p2001	**Expert list:** 1
Min	**Max**	**Factory setting**
- [V]	- [V]	- [V]

Description: Displays the switch-in level for the Vdc_max controller.

If p1294 = 0 (automatic sensing of the switch-in level = off), then the following applies:

AC/AC device: r1282 = 1.15 * sqrt(2) * p0210

DC/AC device: r1282 = 1.15 * p0210

© Siemens AG 2012 All Rights Reserved

If p1294 = 1 (automatic sensing of the switch-in level = on), then the following applies:

r1282 = Vdc_max - 50.0 V (Vdc_max: Overvoltage threshold of the power unit)

r1282 = Vdc_max - 25.0 V (for 230 V power units)

Note: The Vdc_max controller is not switched back off until the DC-link voltage falls below the threshold 0.95 * p1282 and the controller output is zero.

p1283[0...n] Vdc_max controller dynamic factor (U/f) / Vdc_max dyn_factor

VECTOR_G

Can be changed: U, T	**Calculated:** CALC_MOD_CON	**Access level:** 3
Data type: FloatingPoint32	**Dynamic index:** DDS, p0180	**Func. diagram:** 6320
P-Group: Functions	**Units group:** -	**Unit selection:** -
Not for motor type: -	**Scaling:** -	**Expert list:** 1
Min	**Max**	**Factory setting**
1 [%]	10000 [%]	100 [%]

Description: Sets the dynamic factor for the DC link voltage controller (Vdc_max controller).

100% means that p1290, p1291, and p1292 (gain, integral time, and rate time) are used in accordance with their basic settings and on the basis of a theoretical controller optimization.

If subsequent optimization is required, this can be carried out using the dynamic factor. In this case, p1290, p1291, and p1292 are weighted with the dynamic factor p1283.

If several modules are connected to the DC link, then the dynamic factor must be increased corresponding to the ratio of the additional capacitances to the capacitance of the module involved.

Note: The pre-setting of the dynamic factor is based on the power units connected to DRIVE-CLiQ. It is assumed that the power units connected via DRIVE-CLiQ are also electrically connected to the DC link. If this is not the case, then the dynamic factor must be optimized manually.

p1285[0...n] Vdc_min controller switch-in level (kinetic buffering) (U/f) / Vdc_min on_level

VECTOR_G

Can be changed: U, T	**Calculated:** -	**Access level:** 3
Data type: FloatingPoint32	**Dynamic index:** DDS, p0180	**Func. diagram:** -
P-Group: Functions	**Units group:** -	**Unit selection:** -
Not for motor type: -	**Scaling:** -	**Expert list:** 1
Min	**Max**	**Factory setting**
65 [%]	150 [%]	76 [%]

Description: Sets the switch-in level for the Vdc-min controller (kinetic buffering).

The value is obtained as follows:

AC/AC unit: p1286[V] = p1285[%] * sqrt(2) * p0210

DC/AC unit: p1286[V] = p1285[%] * p0210

Warning: An excessively high value may adversely affect normal drive operation. The values up to 150 % are intended for operating modes p1240 = 5, 6.

r1286 Vdc_min controller switch-in level (kinetic buffering) (U/f) / Vdc_min on_level

VECTOR_G

Can be changed: -	**Calculated:** -	**Access level:** 3
Data type: FloatingPoint32	**Dynamic index:** -	**Func. diagram:** 6320
P-Group: Functions	**Units group:** -	**Unit selection:** -
Not for motor type: -	**Scaling:** p2001	**Expert list:** 1
Min	**Max**	**Factory setting**
- [V]	- [V]	- [V]

Description: Displays the switch-in level for the Vdc_min controller (kinetic buffering).

Note: The Vdc_min controller is not switched back off until the DC-link voltage rises above the threshold 1.05 * p1286 and the controller output is zero.

© Siemens AG 2012 All Rights Reserved

p1287[0...n] Vdc_min controller dynamic factor (kinetic buffering) (U/f) / Vdc_min dyn_factor

VECTOR_G	**Can be changed:** U, T	**Calculated:** CALC_MOD_CON	**Access level:** 3
	Data type: FloatingPoint32	**Dynamic index:** DDS, p0180	**Func. diagram:** 6320
	P-Group: Functions	**Units group:** -	**Unit selection:** -
	Not for motor type: -	**Scaling:** -	**Expert list:** 1
	Min	**Max**	**Factory setting**
	1 [%]	10000 [%]	100 [%]

Description: Sets the dynamic factor for the Vdc_min controller (kinetic buffering).

100% means that p1290, p1291, and p1292 (gain, integral time, and rate time) are used corresponding to their basic settings and based on a theoretical controller optimization.

If subsequent optimization is required, this can be carried out using the dynamic factor. In this case, p1290, p1291, and p1292 are weighted with the dynamic factor p1287.

If several modules are connected to the DC link, then the dynamic factor must be increased corresponding to the ratio of the additional capacitances to the capacitance of the module involved.

Note: The pre-setting of the dynamic factor is based on the power units connected to DRIVE-CLiQ. It is assumed that the power units connected via DRIVE-CLiQ are also electrically connected to the DC link. If this is not the case, then the dynamic factor must be optimized manually.

p1288[0...n] Vdc_max controller feedback coupling factor ramp-fct. gen. (U/f) / Vdc_max factor RFG

VECTOR_G	**Can be changed:** U, T	**Calculated:** -	**Access level:** 4
	Data type: FloatingPoint32	**Dynamic index:** DDS, p0180	**Func. diagram:** -
	P-Group: Functions	**Units group:** -	**Unit selection:** -
	Not for motor type: -	**Scaling:** -	**Expert list:** 1
	Min	**Max**	**Factory setting**
	0.000	100.000	0.500

Description: Sets the feedback factor for the ramp-function generator. Its ramp times are decelerated relative to the output signal of the Vdc_max controller.

Note: For values p1288 = 0.0 to 0.5, the controller dynamics are automatically adapted internally.

p1289[0...n] Vdc_max controller speed threshold (U/f) / Vdc_max n_thresh

VECTOR_G	**Can be changed:** U, T	**Calculated:** CALC_MOD_ALL	**Access level:** 3
	Data type: FloatingPoint32	**Dynamic index:** DDS, p0180	**Func. diagram:** -
	P-Group: Functions	**Units group:** 3_1	**Unit selection:** p0505
	Not for motor type: -	**Scaling:** -	**Expert list:** 1
	Min	**Max**	**Factory setting**
	0.00 [rpm]	210000.00 [rpm]	10.00 [rpm]

Description: Sets the lower speed threshold for the Vdc_max controller. When this speed threshold is undershot, the Vdc_max control is switched out and the speed is controlled using the ramp-function generator.

p1290[0...n] Vdc controller proportional gain (U/f) / Vdc_ctrl Kp

VECTOR_G	**Can be changed:** U, T	**Calculated:** CALC_MOD_CON	**Access level:** 3
	Data type: FloatingPoint32	**Dynamic index:** DDS, p0180	**Func. diagram:** 6320
	P-Group: Functions	**Units group:** -	**Unit selection:** -
	Not for motor type: -	**Scaling:** -	**Expert list:** 1
	Min	**Max**	**Factory setting**
	0.00	100.00	1.00

Description: Sets the proportional gain for the Vdc controller (DC link voltage controller).

Note: The gain factor is proportional to the capacitance of the DC link. The parameter is pre-set to a value that is optimally adapted to the capacitance of the individual Motor Module. The capacitances of the other power units which are connected to the DC link can be taken into account using the dynamic factor (p1287 or p1283).

© Siemens AG 2012 All Rights Reserved

p1291[0...n] Vdc controller integral time (U/f) / Vdc_ctrl Tn

VECTOR_G	**Can be changed:** U, T	**Calculated:** -	**Access level:** 3
	Data type: FloatingPoint32	**Dynamic index:** DDS, p0180	**Func. diagram:** 6320
	P-Group: Functions	**Units group:** -	**Unit selection:** -
	Not for motor type: -	**Scaling:** -	**Expert list:** 1
	Min	**Max**	**Factory setting**
	0 [ms]	10000 [ms]	40 [ms]

Description: Sets the integral time for the Vdc controller (DC link voltage controller).

p1292[0...n] Vdc controller rate time (U/f) / Vdc_ctrl t_rate

VECTOR_G	**Can be changed:** U, T	**Calculated:** CALC_MOD_CON	**Access level:** 3
	Data type: FloatingPoint32	**Dynamic index:** DDS, p0180	**Func. diagram:** 6320
	P-Group: Functions	**Units group:** -	**Unit selection:** -
	Not for motor type: -	**Scaling:** -	**Expert list:** 1
	Min	**Max**	**Factory setting**
	0 [ms]	1000 [ms]	10 [ms]

Description: Sets the rate time constant for the Vdc controller (DC link voltage controller).

p1293[0...n] Vdc min controller output limit (U/f) / Vdc_min outp_lim

VECTOR_G	**Can be changed:** U, T	**Calculated:** CALC_MOD_CON	**Access level:** 3
	Data type: FloatingPoint32	**Dynamic index:** DDS, p0180	**Func. diagram:** 6320
	P-Group: Functions	**Units group:** -	**Unit selection:** -
	Not for motor type: -	**Scaling:** -	**Expert list:** 1
	Min	**Max**	**Factory setting**
	0.00 [Hz]	600.00 [Hz]	10.00 [Hz]

Description: Sets the output limit for the Vdc min controller (DC link undervoltage controller).

p1294 Vdc_max controller automatic detection ON signal level (U/f) / Vdc_max SenseOnLev

VECTOR_G	**Can be changed:** U, T	**Calculated:** -	**Access level:** 3
	Data type: Integer16	**Dynamic index:** -	**Func. diagram:** -
	P-Group: Functions	**Units group:** -	**Unit selection:** -
	Not for motor type: -	**Scaling:** -	**Expert list:** 1
	Min	**Max**	**Factory setting**
	0	1	0

Description: Activates/de-activates the automatic sensing of the switch-in level for the Vdc_max controller. When the sensing function is de-activated, the activation threshold r1282 for the Vdc_max controller is determined from the parameterized connection voltage p0210.

Value:
0: Automatic detection inhibited
1: Automatic detection enabled

p1295[0...n] Vdc_min controller time threshold (U/f) / Vdc_min t_thresh

VECTOR_G	**Can be changed:** U, T	**Calculated:** -	**Access level:** 3
	Data type: FloatingPoint32	**Dynamic index:** DDS, p0180	**Func. diagram:** -
	P-Group: Functions	**Units group:** -	**Unit selection:** -
	Not for motor type: -	**Scaling:** -	**Expert list:** 1
	Min	**Max**	**Factory setting**
	0.000 [s]	10000.000 [s]	0.000 [s]

Description: Sets the time threshold for the Vdc_min controller (kinetic buffering). If this value is exceeded a fault is output; the required response can be parameterized.

Prerequisite: p1296 = 1.

© Siemens AG 2012 All Rights Reserved

Notice: If a time threshold has been parameterized, the Vdc_max controller should also be activated (p1280 = 3) so that the drive does not shut down with overvoltage when Vdc_min control is exited (due to the time violation) and in the event of fault response OFF3. It is also possible to increase the OFF3 ramp-down time p1135.

p1296[0...n] Vdc_min controller response (kinetic buffering) (U/f / Vdc_min response

VECTOR_G

Can be changed: U, T	**Calculated:** -	**Access level:** 3
Data type: Integer16	**Dynamic index:** DDS, p0180	**Func. diagram:** -
P-Group: Functions	**Units group:** -	**Unit selection:** -
Not for motor type: -	**Scaling:** -	**Expert list:** 1
Min	**Max**	**Factory setting**
0	1	0

Description: Sets the response for the Vdc_min controller (kinetic buffering).

Value:
0: Buffer Vdc until undervoltage, n<p1297 -> F07405
1: Buff. Vdc until undervolt., n<p1297 -> F07405, t>p1295 -> F07406

Note: Re p1296 = 1:
The quick stop ramp entered in p1135 must not be equal to zero, to prevent overcurrent shutdown if F07406 is triggered.

p1297[0...n] Vdc_min controller speed threshold (U/f) / Vdc_min n_thresh

VECTOR_G

Can be changed: U, T	**Calculated:** CALC_MOD_ALL	**Access level:** 3
Data type: FloatingPoint32	**Dynamic index:** DDS, p0180	**Func. diagram:** -
P-Group: Functions	**Units group:** 3_1	**Unit selection:** p0505
Not for motor type: -	**Scaling:** -	**Expert list:** 1
Min	**Max**	**Factory setting**
0.00 [rpm]	210000.00 [rpm]	50.00 [rpm]

Description: Sets the speed threshold for the Vdc-min controller (kinetic buffering).
If this value is exceeded a fault is output; the required response can be parameterized .

r1298 CO: Vdc controller output (U/f) / Vdc_ctrl output

VECTOR_G

Can be changed: -	**Calculated:** -	**Access level:** 3
Data type: FloatingPoint32	**Dynamic index:** -	**Func. diagram:** 6320
P-Group: Functions	**Units group:** 3_1	**Unit selection:** p0505
Not for motor type: -	**Scaling:** p2000	**Expert list:** 1
Min	**Max**	**Factory setting**
- [rpm]	- [rpm]	- [rpm]

Description: Displays the actual output of the Vdc controller (DC link voltage controller)

p1300[0...n] Open-loop/closed-loop control operating mode / Op/cl-lp ctrl_mode

VECTOR_G

Can be changed: C2(1), T	**Calculated:** -	**Access level:** 2
Data type: Integer16	**Dynamic index:** DDS, p0180	**Func. diagram:** 1690, 6300, 6310, 6320
P-Group: U/f open-loop control	**Units group:** -	**Unit selection:** -
Not for motor type: -	**Scaling:** -	**Expert list:** 1
Min	**Max**	**Factory setting**
0	19	0

Description: Sets the U/f control mode of the drive.

Value:
0: U/f control with linear characteristic
1: U/f control with linear characteristic and FCC
2: U/f control with parabolic characteristic
3: U/f control with parameterizable characteristic
4: U/f control with linear characteristic and ECO
5: U/f control for drives requiring a precise freq. (e.g. textiles)
6: U/f control for drives requiring a precise frequency and FCC
7: U/f control for a parabolic characteristic and ECO

© Siemens AG 2012 All Rights Reserved

15: Operation with braking resistor
19: U/f control with independent voltage setpoint

Recommend.: The use of the vector control operating modes is recommended for synchronous motors.

Dependency: If you are working with reduced supply voltages (p0212.0 = 1), only U/f control with independent voltage setpoint (p1300 = 19) can be set as the operating mode.

p1300 = 15 (operation with braking resistor), can only be activated or deactivated in quick commissioning (p0010 = 1). This operating mode is only possible for chassis power units (DC/AC Motor Module).

Notice: Active slip compensation is required in the U/f control types with Eco mode (p1300 = 4, 7). The scaling of the slip compensation (p1335) should be set so that the slip is completely compensated (generally 100%).

The Eco mode is only effective in steady-state operation and when the ramp-function generator is not bypassed. In the case of analog setpoints, if required the tolerance for ramp-up and ramp-down should be actively increased for the ramp-function generator using p1148 in order to reliably signal a steady-state condition.

Note: For the open-loop control modes p1300 = 5 and 6, the slip compensation p1335 and the resonance damping p1338 are internally switched out (disabled) in order to be able to precisely set the output frequency.

For the open-loop control modes p1300 = 4 and 7 (Eco mode), the efficiency can be optimized by varying the voltage (when the operating point is constant).

During operation (pulses enabled) the open-loop control mode cannot be changed by changing over drive data sets.

p1300[0...n] Open-loop/closed-loop control operating mode / Op/cl-lp ctrl_mode

VECTOR_G (n/M)

Can be changed: C2(1), T	**Calculated:** -	**Access level:** 2
Data type: Integer16	**Dynamic index:** DDS, p0180	**Func. diagram:** 1690, 1700, 6300, 8012
P-Group: U/f open-loop control	**Units group:** -	**Unit selection:** -
Not for motor type: -	**Scaling:** -	**Expert list:** 1
Min	**Max**	**Factory setting**
0	23	20

Description: Sets the open and closed-loop control mode of a drive.

Value:
0: U/f control with linear characteristic
1: U/f control with linear characteristic and FCC
2: U/f control with parabolic characteristic
3: U/f control with parameterizable characteristic
4: U/f control with linear characteristic and ECO
5: U/f control for drives requiring a precise freq. (e.g. textiles)
6: U/f control for drives requiring a precise frequency and FCC
7: U/f control for a parabolic characteristic and ECO
15: Operation with braking resistor
18: I/f control with fixed current
19: U/f control with independent voltage setpoint
20: Speed control (encoderless)
21: Speed control (with encoder)
22: Torque control (encoderless)
23: Torque control (with encoder)

Recommend.: The use of the vector control operating modes is recommended for synchronous motors.

Dependency: Closed-loop speed or torque control (with encoder) cannot be selected if the encoder type is not entered (p0400).

Closed-loop speed or torque control can be selected if the closed-loop speed/torque control was selected as operating mode (p0108.2).

Only operation with U/f characteristic is possible if the rated motor speed is not entered (p0311).

A reluctance motor can only be operated in a U/f control mode (p1300 < 20).

Sensorless control on separately excited synchronous motors is only possible with a VSM module (see p0150, p0151).

For chassis power units with reduced line voltage (see r0212 bit 0), the drive can only be operated in a control mode (p1300 = 20...23) and with the DC link voltage control activated.

Refer to: p0108, r0108, p0212, p0300, p0311, p0400, p1501

Notice: Active slip compensation is required in the U/f control types with Eco mode (p1300 = 4, 7). The scaling of the slip compensation (p1335) should be set so that the slip is completely compensated (generally 100%).

© Siemens AG 2012 All Rights Reserved

The Eco mode is only effective in steady-state operation and when the ramp-function generator is not bypassed. In the case of analog setpoints, if required the tolerance for ramp-up and ramp-down should be actively increased for the ramp-function generator using p1148 in order to reliably signal a steady-state condition.

Note: The closed-loop torque control can only be changed over in operation (p1300 = 20, 21) by selecting the closed-loop speed control (p1501). At the changeover, the setting of p1300 does not change. In this case, the actual state is displayed in r1407, bit 2 and bit 3.

For the open-loop control modes p1300 = 5 and 6 (textile sector), slip compensation p1335, resonance damping p1338, and the Imax frequency controller are switched off internally so that the output frequency can be set precisely. The Imax voltage controller remains active.

For the open-loop control modes p1300 = 4 and 7 (Eco mode), the efficiency can be optimized by varying the voltage (when the operating point is constant).

Separately-excited synchronous motors can only be operated in modes p1300 = 20, 21 and 23 - or for diagnostic purposes in modes p1300 = 0, 3 and 18. For I/f control (p1300 = 18), the current amplitude can be set using p1609. Both for U/f as well as for I/f control only a small load may be applied to the separately-excited synchronous motor because the excitation current is not calculated as a function of the load.

During operation (pulses enabled) the open-loop/closed-loop control mode cannot be changed by changing over drive data sets.

p1300 is pre-assigned depending on r0108.2 and p0187.

p1302[0...n] U/f control configuration / U/f configuration

VECTOR_G

Can be changed: T	**Calculated:** -	**Access level:** 3
Data type: Unsigned16	**Dynamic index:** DDS, p0180	**Func. diagram:** -
P-Group: U/f open-loop control	**Units group:** -	**Unit selection:** -
Not for motor type: -	**Scaling:** -	**Expert list:** 1
Min	**Max**	**Factory setting**
-	-	0000 bin

Description: Sets the configuration for the U/f control.

Bit field:

Bit	Signal name	1 signal	0 signal	FP
00	U_output starting angle zero	Yes	No	-
01	Take into account the setpoint voltage sign	Yes	No	-

Note: Re bit 00:

If the bit is set the device will always start up with setpoint angle zero on pulse enable. This also affects the setpoint angle for DC braking (p1231).

Re bit 01:

If the bit is set, in the case of U/f control with independent voltage setpoint (p1300 = 19) and negative setpoint voltages at the input of p1330, the setpoint angle is rotated through 180 degrees, thereby achieving a negative output voltage. The voltage boost is in this case not active (p1310, p1311).

p1310[0...n] Voltage boost permanent / U_boost perm

VECTOR_G

Can be changed: U, T	**Calculated:** -	**Access level:** 2
Data type: FloatingPoint32	**Dynamic index:** DDS, p0180	**Func. diagram:** 1690, 6300
P-Group: U/f open-loop control	**Units group:** -	**Unit selection:** -
Not for motor type: -	**Scaling:** -	**Expert list:** 1
Min	**Max**	**Factory setting**
0.0 [%]	250.0 [%]	50.0 [%]

Description: Defines the voltage boost as a [%] referred to the rated motor current (p0305).

The magnitude of the permanent voltage boost is reduced with increasing frequency so that at the rated motor frequency, the rated motor voltage is present.

The magnitude of the boost in Volt at a frequency of zero is defined as follows:

Voltage boost [V] = 1.732 x p0305 (rated motor current [A]) x r0395 (stator/primary section resistance [ohm]) x p1310 (permanent voltage boost [%]) / 100 %

At low output frequencies, there is only a low output voltage in order to maintain the motor flux. However, the output voltage can be too low in order to achieve the following:

- magnetize the induction motor.
- hold the load.
- compensate for losses in the system.

© Siemens AG 2012 All Rights Reserved

This is the reason that the output voltage can be increased using p1310.

The voltage boost can be used for both linear as well as square-law U/f characteristics.

Dependency: The current limit p0640 limits the boost.

For vector control, the permanent voltage boost (p1310) has no effect as the drive converter automatically sets the optimum operating conditions.

Refer to: p1300, p1311, p1312, r1315

Notice: The voltage boost increases the motor temperature (particularly at zero speed).

Note: The voltage boost is only effective for U/f control (p1300).

The boost values are combined with one another if the permanent voltage boost (p1310) is used in conjunction with other boost parameters (acceleration boost (p1311), voltage boost for starting (p1312)).

However, these parameters are assigned the following priorities: p1310 > p1311, p1312

p1311[0...n] Voltage boost at acceleration / U_boost accelerate

VECTOR_G

Can be changed: U, T	**Calculated:** -	**Access level:** 2
Data type: FloatingPoint32	**Dynamic index:** DDS, p0180	**Func. diagram:** 1690, 6300
P-Group: U/f open-loop control	**Units group:** -	**Unit selection:** -
Not for motor type: -	**Scaling:** -	**Expert list:** 1
Min	**Max**	**Factory setting**
0.0 [%]	250.0 [%]	0.0 [%]

Description: p1311 only results in a voltage boost when accelerating and generates a supplementary torque to accelerate the load.

The voltage boost becomes effective for a positive setpoint increase and disappears as soon as the setpoint has been reached. The build-up and withdrawal of the voltage boost are smoothed.

The magnitude of the boost in Volt at a frequency of zero is defined as follows:

Voltage boost [V] = 1.732 * p0305 (rated motor current [A]) x r0395 (stator/primary section resistance [ohm]) x p1311 (voltage boost when accelerating [%]) / 100 %

Dependency: The current limit p0640 limits the boost.

Refer to: p1300, p1310, p1312, r1315

Notice: The voltage boost results in a higher motor temperature increase.

Note: The voltage boost when accelerating can improve the response to small, positive setpoint changes.

Assigning priorities for the voltage boosts: refer to p1310

p1312[0...n] Voltage boost when starting / U_boost starting

VECTOR_G

Can be changed: U, T	**Calculated:** -	**Access level:** 2
Data type: FloatingPoint32	**Dynamic index:** DDS, p0180	**Func. diagram:** 1690, 6300
P-Group: U/f open-loop control	**Units group:** -	**Unit selection:** -
Not for motor type: -	**Scaling:** -	**Expert list:** 1
Min	**Max**	**Factory setting**
0.0 [%]	250.0 [%]	0.0 [%]

Description: Setting for an additional voltage boost when powering-up, however, only for the first acceleration phase.

The voltage boost becomes effective for a positive setpoint increase and disappears as soon as the setpoint has been reached. The build-up and withdrawal of the voltage boost are smoothed.

Dependency: The current limit p0640 limits the boost.

Refer to: p1300, p1310, p1311, r1315

Notice: The voltage boost results in a higher motor temperature increase.

Note: The voltage boost when accelerating can improve the response to small, positive setpoint changes.

Assigning priorities for the voltage boosts: refer to p1310

© Siemens AG 2012 All Rights Reserved

r1315 Voltage boost total / U_boost total

VECTOR_G

Can be changed: -	**Calculated:** -	**Access level:** 3
Data type: FloatingPoint32	**Dynamic index:** -	**Func. diagram:** 6300
P-Group: U/f open-loop control	**Units group:** -	**Unit selection:** -
Not for motor type: -	**Scaling:** p2001	**Expert list:** 1
Min	**Max**	**Factory setting**
- [Vrms]	- [Vrms]	- [Vrms]

Description: Displays the total resulting voltage boost in volt.
r1315 = p1310 + p1311 + p1312

Dependency: Refer to: p1310, p1311, p1312

p1320[0...n] U/f control programmable characteristic frequency 1 / Uf char f1

VECTOR_G

Can be changed: U, T	**Calculated:** CALC_MOD_ALL	**Access level:** 3
Data type: FloatingPoint32	**Dynamic index:** DDS, p0180	**Func. diagram:** 6300
P-Group: U/f open-loop control	**Units group:** -	**Unit selection:** -
Not for motor type: -	**Scaling:** -	**Expert list:** 1
Min	**Max**	**Factory setting**
0.00 [Hz]	3000.00 [Hz]	0.00 [Hz]

Description: The programmable characteristic for the U/f control is defined using 4 points and 0 Hz/p1310.
This parameter specifies the voltage of the first point along the characteristic.

Dependency: Selects the freely programmable characteristic using p1300 = 3.
The following applies to the frequency values: p1320 <= p1322 <= p1324 <= p1326. Otherwise, a standard characteristic is used that contains the rated motor operating point.
Refer to: p1300, p1310, p1311, p1321, p1322, p1323, p1324, p1325, p1326, p1327

Note: Linear interpolation is carried out between the points 0 Hz/p1310, p1320/p1321 ... p1326/p1327.
The voltage boost when accelerating (p1311) is also applied to the freely programmable U/f characteristic.

p1321[0...n] U/f control programmable characteristic voltage 1 / Uf char U1

VECTOR_G

Can be changed: U, T	**Calculated:** CALC_MOD_ALL	**Access level:** 3
Data type: FloatingPoint32	**Dynamic index:** DDS, p0180	**Func. diagram:** 6300
P-Group: U/f open-loop control	**Units group:** -	**Unit selection:** -
Not for motor type: -	**Scaling:** -	**Expert list:** 1
Min	**Max**	**Factory setting**
0.0 [Vrms]	10000.0 [Vrms]	0.0 [Vrms]

Description: The programmable characteristic for the U/f control is defined using 4 points and 0 Hz/p1310.
This parameter specifies the voltage of the first point along the characteristic.

Dependency: Selects the freely programmable characteristic using p1300 = 3.
Refer to: p1310, p1311, p1320, p1322, p1323, p1324, p1325, p1326, p1327

Note: Linear interpolation is carried out between the points 0 Hz/p1310, p1320/p1321 ... p1326/p1327.
The voltage boost when accelerating (p1311) is also applied to the freely programmable U/f characteristic.

p1322[0...n] U/f control programmable characteristic frequency 2 / Uf char f2

VECTOR_G

Can be changed: U, T	**Calculated:** CALC_MOD_ALL	**Access level:** 3
Data type: FloatingPoint32	**Dynamic index:** DDS, p0180	**Func. diagram:** 6300
P-Group: U/f open-loop control	**Units group:** -	**Unit selection:** -
Not for motor type: -	**Scaling:** -	**Expert list:** 1
Min	**Max**	**Factory setting**
0.00 [Hz]	3000.00 [Hz]	0.00 [Hz]

Description: The programmable characteristic for the U/f control is defined using 4 points and 0 Hz/p1310.
This parameter specifies the voltage of the second point along the characteristic.

© Siemens AG 2012 All Rights Reserved

Dependency: The following applies to the frequency values: p1320 <= p1322 <= p1324 <= p1326. Otherwise, a standard characteristic is used that contains the rated motor operating point.
Refer to: p1310, p1311, p1320, p1321, p1323, p1324, p1325, p1326, p1327

p1323[0...n] U/f control programmable characteristic voltage 2 / Uf char U2

VECTOR_G	**Can be changed:** U, T	**Calculated:** CALC_MOD_ALL	**Access level:** 3
	Data type: FloatingPoint32	**Dynamic index:** DDS, p0180	**Func. diagram:** 6300
	P-Group: U/f open-loop control	**Units group:** -	**Unit selection:** -
	Not for motor type: -	**Scaling:** -	**Expert list:** 1
	Min	**Max**	**Factory setting**
	0.0 [Vrms]	10000.0 [Vrms]	0.0 [Vrms]

Description: The programmable characteristic for the U/f control is defined using 4 points and 0 Hz/p1310.
This parameter specifies the voltage of the second point along the characteristic.

Dependency: Refer to: p1310, p1311, p1320, p1321, p1322, p1324, p1325, p1326, p1327

p1324[0...n] U/f control programmable characteristic frequency 3 / Uf char f3

VECTOR_G	**Can be changed:** U, T	**Calculated:** CALC_MOD_ALL	**Access level:** 3
	Data type: FloatingPoint32	**Dynamic index:** DDS, p0180	**Func. diagram:** 6300
	P-Group: U/f open-loop control	**Units group:** -	**Unit selection:** -
	Not for motor type: -	**Scaling:** -	**Expert list:** 1
	Min	**Max**	**Factory setting**
	0.00 [Hz]	3000.00 [Hz]	0.00 [Hz]

Description: The programmable characteristic for the U/f control is defined using 4 points and 0 Hz/p1310.
This parameter specifies the voltage of the third point along the characteristic.

Dependency: The following applies to the frequency values: p1320 <= p1322 <= p1324 <= p1326. Otherwise, a standard characteristic is used that contains the rated motor operating point.
Refer to: p1310, p1311, p1320, p1321, p1322, p1323, p1325, p1326, p1327

p1325[0...n] U/f control programmable characteristic voltage 3 / Uf char U3

VECTOR_G	**Can be changed:** U, T	**Calculated:** CALC_MOD_ALL	**Access level:** 3
	Data type: FloatingPoint32	**Dynamic index:** DDS, p0180	**Func. diagram:** 6300
	P-Group: U/f open-loop control	**Units group:** -	**Unit selection:** -
	Not for motor type: -	**Scaling:** -	**Expert list:** 1
	Min	**Max**	**Factory setting**
	0.0 [Vrms]	10000.0 [Vrms]	0.0 [Vrms]

Description: The programmable characteristic for the U/f control is defined using 4 points and 0 Hz/p1310.
This parameter specifies the voltage of the third point along the characteristic.

Dependency: Refer to: p1310, p1311, p1320, p1321, p1322, p1323, p1324, p1326, p1327

p1326[0...n] U/f control programmable characteristic frequency 4 / Uf char f4

VECTOR_G	**Can be changed:** U, T	**Calculated:** CALC_MOD_REG	**Access level:** 3
	Data type: FloatingPoint32	**Dynamic index:** DDS, p0180	**Func. diagram:** 6300
	P-Group: U/f open-loop control	**Units group:** -	**Unit selection:** -
	Not for motor type: -	**Scaling:** -	**Expert list:** 1
	Min	**Max**	**Factory setting**
	0.00 [Hz]	10000.00 [Hz]	0.00 [Hz]

Description: The programmable characteristic for the U/f control is defined using 4 points and 0 Hz/p1310.
This parameter specifies the frequency of the fourth point along the characteristic.

Dependency: Selects the freely programmable characteristic using p1300 = 3.
The following applies for the frequency values:
p1320 <= p1322 <= p1324 <= p1326
Otherwise, a standard characteristic is used that contains the rated motor operating point.
Refer to: p1310, p1311, p1320, p1321, p1322, p1323, p1324, p1325, p1327

© Siemens AG 2012 All Rights Reserved

Note: Linear interpolation is carried out between the points 0 Hz/p1310, p1320/p1321 ... p1326/p1327. For output frequencies above p1326, the characteristic is extrapolated with the gradient between the characteristic points p1324/p1325 and p1326/p1327.
The voltage boost when accelerating (p1311) is also applied to the freely programmable U/f characteristic.

p1327[0...n] U/f control programmable characteristic voltage 4 / Uf char U4

VECTOR_G

Can be changed: U, T	**Calculated:** CALC_MOD_REG	**Access level:** 3
Data type: FloatingPoint32	**Dynamic index:** DDS, p0180	**Func. diagram:** 6300
P-Group: U/f open-loop control	**Units group:** -	**Unit selection:** -
Not for motor type: -	**Scaling:** -	**Expert list:** 1
Min	**Max**	**Factory setting**
0.0 [Vrms]	10000.0 [Vrms]	0.0 [Vrms]

Description: The programmable characteristic for the U/f control is defined using 4 points and 0 Hz/p1310.
This parameter specifies the voltage of the fourth point along the characteristic.

Dependency: Selects the freely programmable characteristic using p1300 = 3.
Refer to: p1310, p1311, p1320, p1321, p1322, p1323, p1324, p1325, p1326

Note: Linear interpolation is carried out between the points 0 Hz/p1310, p1320/p1321 ... p1326/p1327.
The voltage boost when accelerating (p1311) is also applied to the freely programmable U/f characteristic.

p1330[0...n] CI: U/f control independent voltage setpoint / Uf U_set independ.

VECTOR_G

Can be changed: T	**Calculated:** -	**Access level:** 3
Data type: Unsigned32 / FloatingPoint32	**Dynamic index:** CDS, p0170	**Func. diagram:** 6300
P-Group: U/f open-loop control	**Units group:** -	**Unit selection:** -
Not for motor type: -	**Scaling:** p2001	**Expert list:** 1
Min	**Max**	**Factory setting**
-	-	0

Description: Sets the signal source for the voltage setpoint for U/f control with an independent voltage setpoint (p1300 = 19).

Dependency: Selects the U/f control with independent voltage setpoint via p1300 = 19.
Refer to: p1300

p1333[0...n] U/f control FCC starting frequency / U/f FCC f_start

VECTOR_G

Can be changed: U, T	**Calculated:** CALC_MOD_ALL	**Access level:** 3
Data type: FloatingPoint32	**Dynamic index:** DDS, p0180	**Func. diagram:** 6310
P-Group: U/f open-loop control	**Units group:** -	**Unit selection:** -
Not for motor type: -	**Scaling:** -	**Expert list:** 1
Min	**Max**	**Factory setting**
0.00 [Hz]	3000.00 [Hz]	0.00 [Hz]

Description: Sets the starting frequency at which FCC (Flux Current Control) is activated.

Dependency: The correct operating mode must be set (p1300 = 1, 6).

Warning: An excessively low value can result in instability.

Note: For p1333 = 0 Hz, the FCC starting frequency is automatically set to 6 % of the rated motor frequency.

p1334[0...n] U/f control slip compensation starting frequency / Slip comp start

VECTOR_G

Can be changed: U, T	**Calculated:** CALC_MOD_ALL	**Access level:** 3
Data type: FloatingPoint32	**Dynamic index:** DDS, p0180	**Func. diagram:** 6310
P-Group: U/f open-loop control	**Units group:** -	**Unit selection:** -
Not for motor type: -	**Scaling:** -	**Expert list:** 1
Min	**Max**	**Factory setting**
0.00 [Hz]	3000.00 [Hz]	0.00 [Hz]

Description: Sets the starting frequency of the slip compensation.

© Siemens AG 2012 All Rights Reserved

Note: For p1334 = 0, the starting frequency of the slip compensation is automatically set to 6 % of the rated motor frequency.

p1335[0...n] Slip compensation, scaling / Slip comp scal

VECTOR_G

Can be changed: U, T	**Calculated:** -	**Access level:** 2
Data type: FloatingPoint32	**Dynamic index:** DDS, p0180	**Func. diagram:** 1690, 6310
P-Group: U/f open-loop control	**Units group:** -	**Unit selection:** -
Not for motor type: PEM, REL	**Scaling:** -	**Expert list:** 1
Min	**Max**	**Factory setting**
0.0 [%]	600.0 [%]	0.0 [%]

Description: Sets the setpoint for slip compensation in [%] referred to r0330 (motor rated slip).

p1335 = 0.0 %: Slip compensation de-activated.

p1335 = 100.0 %: The slip is completely compensated.

Dependency: Prerequisite for a precise slip compensation for p1335 = 100 % are the precise motor parameters (p0350 ... p0360).

If the parameters are not precisely known, a precise compensation can be achieved by varying p1335.

For U/f control types with Eco optimization (4 and 7), the slip compensation must be activated in order to guarantee correct operation.

Note: The purpose of slip compensation is to maintain a constant motor speed regardless of the applied load. The fact that the motor speed decreases with increasing load is a typical characteristic of induction motors.

For synchronous motors, this effect does not occur and the parameter has no effect in this case.

For the open-loop control modes p1300 = 5 and 6 (textile sector), the slip compensation is internally disabled in order to be able to precisely set the output frequency.

If p1335 is changed during commissioning (p0009, p0010 > 0), then it is possible that the old value will no longer be able to be set. The reason for this is that the dynamic limits of p1335 have been changed by a parameter that was set when the drive was commissioned (e.g. p0300).

p1336[0...n] Slip compensation limit value / Slip comp lim val

VECTOR_G

Can be changed: U, T	**Calculated:** -	**Access level:** 2
Data type: FloatingPoint32	**Dynamic index:** DDS, p0180	**Func. diagram:** 6310
P-Group: U/f open-loop control	**Units group:** -	**Unit selection:** -
Not for motor type: PEM, REL	**Scaling:** -	**Expert list:** 1
Min	**Max**	**Factory setting**
0.00 [%]	600.00 [%]	250.00 [%]

Description: Sets the limit value for slip compensation in [%] referred to r0330 (motor rated slip).

r1337 CO: Actual slip compensation / Slip comp act val

VECTOR_G

Can be changed: -	**Calculated:** -	**Access level:** 3
Data type: FloatingPoint32	**Dynamic index:** -	**Func. diagram:** 6310
P-Group: U/f open-loop control	**Units group:** -	**Unit selection:** -
Not for motor type: PEM, REL	**Scaling:** PERCENT	**Expert list:** 1
Min	**Max**	**Factory setting**
- [%]	- [%]	- [%]

Description: Displays the actual compensated slip [%] referred to r0330 (rated motor slip).

Dependency: p1335 > 0 %: Slip compensation active.

Refer to: p1335

© Siemens AG 2012 All Rights Reserved

p1338[0...n] U/f mode resonance damping gain / Uf Res_damp gain

VECTOR_G	**Can be changed:** U, T	**Calculated:** CALC_MOD_CON	**Access level:** 3
	Data type: FloatingPoint32	**Dynamic index:** DDS, p0180	**Func. diagram:** 1690, 6310
	P-Group: U/f open-loop control	**Units group:** -	**Unit selection:** -
	Not for motor type: -	**Scaling:** -	**Expert list:** 1
	Min	**Max**	**Factory setting**
	0.00	100.00	0.00

Description: Sets the gain for resonance damping for U/f control.

Dependency: Refer to: p1300, p1339, p1349

Note: The resonance damping function dampens active current oscillations that frequency occur under no-load conditions.

The resonance damping is active in a range from approximately 6 % of the rated motor frequency (p0310). The shutoff frequency is determined by p1349.

For the open-loop control modes p1300 = 5 and 6 (textile sectors), the resonance damping is internally disabled in order that the output frequency can be precisely set.

p1339[0...n] U/f mode resonance damping filter time constant / Uf Res_damp T

VECTOR_G	**Can be changed:** U, T	**Calculated:** CALC_MOD_CON	**Access level:** 3
	Data type: FloatingPoint32	**Dynamic index:** DDS, p0180	**Func. diagram:** 6310
	P-Group: U/f open-loop control	**Units group:** -	**Unit selection:** -
	Not for motor type: -	**Scaling:** -	**Expert list:** 1
	Min	**Max**	**Factory setting**
	1.00 [ms]	1000.00 [ms]	20.00 [ms]

Description: Sets the filter time constant for resonance damping for U/f control.

Dependency: Refer to: p1300, p1338, p1349

p1340[0...n] I_max frequency controller proportional gain / I_max_ctrl Kp

VECTOR_G	**Can be changed:** U, T	**Calculated:** CALC_MOD_CON	**Access level:** 3
	Data type: FloatingPoint32	**Dynamic index:** DDS, p0180	**Func. diagram:** 1690
	P-Group: U/f open-loop control	**Units group:** -	**Unit selection:** -
	Not for motor type: -	**Scaling:** -	**Expert list:** 1
	Min	**Max**	**Factory setting**
	0.000	0.500	0.000

Description: Sets the proportional gain of the I_max frequency controller.

The I_max controller reduces the drive converter output current if the maximum current (r0067) is exceeded.

In the U/f operating modes (p1300) for the I_max control, one controller is used that acts on the output frequency and one controller that acts on the output voltage. The frequency controller reduces the current by decreasing the converter output frequency. The frequency is reduced down to a minimum value (equaling twice rated slip). If the overcurrent condition cannot be successfully resolved using this measure, then the drive converter output voltage is reduced using the I_max voltage controller. Once the overcurrent condition has been resolved, the drive is accelerated along the ramp set in p1120 (ramp-up time).

Dependency: In the U/f modes (p1300) for textile applications and for external voltage setpoints, only the I_max voltage controller is used.

Notice: When de-activating the I_max controller, the following must be carefully observed:

When the maximum current (r0067) is exceeded, the output current is no longer reduced, however, overcurrent alarm messages are generated. The drive is shut down if the overcurrent limit (r0209) is exceeded.

Note: The I_max limiting controller becomes ineffective if the ramp-function generator is de-activated with p1122 = 1.

p1341 = 0: I_max frequency controller de-activated and I_max voltage controller activated over the complete speed range.

© Siemens AG 2012 All Rights Reserved

p1341[0...n] I_max frequency controller integral time / I_max_ctrl Tn

VECTOR_G	**Can be changed:** U, T	**Calculated:** CALC_MOD_CON	**Access level:** 3
	Data type: FloatingPoint32	**Dynamic index:** DDS, p0180	**Func. diagram:** 1690
	P-Group: U/f open-loop control	**Units group:** -	**Unit selection:** -
	Not for motor type: -	**Scaling:** -	**Expert list:** 1
	Min	**Max**	**Factory setting**
	0.000 [s]	50.000 [s]	0.300 [s]

Description: Sets the integral time for the I_max frequency controller.

Dependency: Refer to: p1340

Note: When p1341 = 0, the current limiting controller influencing the frequency is de-activated and only the current limiting controller influencing the output voltage remains active (p1345, p1346).

r1343 CO: I_max controller frequency output / I_max_ctrl f_outp

VECTOR_G	**Can be changed:** -	**Calculated:** -	**Access level:** 3
	Data type: FloatingPoint32	**Dynamic index:** -	**Func. diagram:** 1690
	P-Group: U/f open-loop control	**Units group:** 3_1	**Unit selection:** p0505
	Not for motor type: -	**Scaling:** p2000	**Expert list:** 1
	Min	**Max**	**Factory setting**
	- [rpm]	- [rpm]	- [rpm]

Description: Displays the effective frequency limit.

Dependency: Refer to: p1340

r1344 I_max controller voltage output / I_max_ctrl U_outp

VECTOR_G	**Can be changed:** -	**Calculated:** -	**Access level:** 3
	Data type: FloatingPoint32	**Dynamic index:** -	**Func. diagram:** 1690
	P-Group: U/f open-loop control	**Units group:** 5_1	**Unit selection:** p0505
	Not for motor type: -	**Scaling:** p2001	**Expert list:** 1
	Min	**Max**	**Factory setting**
	- [Vrms]	- [Vrms]	- [Vrms]

Description: Displays the amount by which the converter output voltage is reduced.

Dependency: Refer to: p1340

p1345[0...n] I_max voltage controller proportional gain / I_max_U_ctrl Kp

VECTOR_G	**Can be changed:** U, T	**Calculated:** CALC_MOD_CON	**Access level:** 3
	Data type: FloatingPoint32	**Dynamic index:** DDS, p0180	**Func. diagram:** 1690
	P-Group: U/f open-loop control	**Units group:** -	**Unit selection:** -
	Not for motor type: -	**Scaling:** -	**Expert list:** 1
	Min	**Max**	**Factory setting**
	0.000	100000.000	0.000

Description: Sets the proportional gain for the I_max voltage controller.

Dependency: Refer to: p1340

Note: The controller settings are also used in the current controller of the DC braking (refer to p1232).

p1346[0...n] I_max voltage controller integral time / I_max_U_ctrl Tn

VECTOR_G	**Can be changed:** U, T	**Calculated:** CALC_MOD_CON	**Access level:** 3
	Data type: FloatingPoint32	**Dynamic index:** DDS, p0180	**Func. diagram:** 1690
	P-Group: U/f open-loop control	**Units group:** -	**Unit selection:** -
	Not for motor type: -	**Scaling:** -	**Expert list:** 1
	Min	**Max**	**Factory setting**
	0.000 [s]	50.000 [s]	0.030 [s]

Description: Sets the integral time for the I_max voltage controller.

© Siemens AG 2012 All Rights Reserved

Dependency: Refer to: p1340

Note: The controller settings are also used in the current controller of the DC braking (refer to p1232).
For p1346 = 0, the following applies:
The integral time of the I_max voltage controller is de-activated.

r1348 CO: U/f control Eco factor actual value / U/f Eco fac act v

VECTOR_G

Can be changed: -	**Calculated:** -	**Access level:** 4
Data type: FloatingPoint32	**Dynamic index:** -	**Func. diagram:** 6300
P-Group: U/f open-loop control	**Units group:** -	**Unit selection:** -
Not for motor type: -	**Scaling:** PERCENT	**Expert list:** 1
Min	**Max**	**Factory setting**
- [%]	- [%]	- [%]

Description: Displays the economic factor determined for optimizing motor consumption.

Dependency: Refer to: p1335

Note: The value is only determined for operating modes with Economic (p1300 = 4, 7).

p1349[0...n] U/f mode resonance damping maximum frequency / Uf res_damp f_max

VECTOR_G

Can be changed: U, T	**Calculated:** CALC_MOD_ALL	**Access level:** 3
Data type: FloatingPoint32	**Dynamic index:** DDS, p0180	**Func. diagram:** 6310
P-Group: U/f open-loop control	**Units group:** -	**Unit selection:** -
Not for motor type: -	**Scaling:** -	**Expert list:** 1
Min	**Max**	**Factory setting**
0.00 [Hz]	3000.00 [Hz]	0.00 [Hz]

Description: Sets the maximum output frequency for resonance damping for U/f control.
Resonance damping is inactive above this output frequency.

Dependency: Refer to: p1338, p1339

Note: For p1349 = 0, the changeover limit is automatically set to 95 % of the rated motor frequency - however, to a max. of 45 Hz.

p1350[0...n] Soft starting / Soft starting

VECTOR_G

Can be changed: U, T	**Calculated:** -	**Access level:** 3
Data type: Integer16	**Dynamic index:** DDS, p0180	**Func. diagram:** 1690
P-Group: U/f open-loop control	**Units group:** -	**Unit selection:** -
Not for motor type: -	**Scaling:** -	**Expert list:** 1
Min	**Max**	**Factory setting**
0	1	0

Description: Sets whether the voltage is continuously increased during the magnetizing phase (p1350 = 1, On) or whether it jumps directly to the voltage boost (p1350 = 0, Off).

Value:
0: OFF
1: ON

Note: The settings for this parameter have the following advantages and disadvantages:
0 = off (jump directly to voltage boost)
Advantage: Flux is established quickly -> torque is quickly available
Disadvantage: The motor can move while it is being magnetized
1 = on (voltage is continually established)
Advantage: The motor is unlikely to rotate
Disadvantage: The flux is established slower -> torque is available later

© Siemens AG 2012 All Rights Reserved

p1351[0...n] CO: Motor holding brake starting frequency / Brake f_start

VECTOR_G

Can be changed: U, T	**Calculated:** -	**Access level:** 3
Data type: FloatingPoint32	**Dynamic index:** DDS, p0180	**Func. diagram:** 6310
P-Group: U/f open-loop control	**Units group:** -	**Unit selection:** -
Not for motor type: REL	**Scaling:** PERCENT	**Expert list:** 1
Min	**Max**	**Factory setting**
-300.00 [%]	300.00 [%]	0.00 [%]

Description: Sets the frequency setting value at the slip compensation output for starting up with motor holding brake.

Dependency: When setting p1351 > 0, then slip compensation is automatically activated (p1335 = 100 %).

Notice: A BICO interconnection to a parameter that belongs to a drive data set always acts on the effective data set.

Note: A value of 100% corresponds to the motor rated slip (r0330).

p1356[0...n] CI: U/f control, angular setpoint / Uf ang setpoint

VECTOR_G

Can be changed: U, T	**Calculated:** -	**Access level:** 3
Data type: Unsigned32 / FloatingPoint32	**Dynamic index:** CDS, p0170	**Func. diagram:** -
P-Group: U/f open-loop control	**Units group:** -	**Unit selection:** -
Not for motor type: -	**Scaling:** p2005	**Expert list:** 1
Min	**Max**	**Factory setting**
-	-	0

Description: Sets the signal source for the differential angular generation for U/f control.

p1358[0...n] Angular difference, symmetrizing, actual angle / Sym act angle

VECTOR_G

Can be changed: U, T	**Calculated:** -	**Access level:** 3
Data type: FloatingPoint32	**Dynamic index:** DDS, p0180	**Func. diagram:** -
P-Group: U/f open-loop control	**Units group:** -	**Unit selection:** -
Not for motor type: -	**Scaling:** -	**Expert list:** 1
Min	**Max**	**Factory setting**
0	1	0

Description: Sets the dead time for the symmetrizing of the actual angle value for the differential angular generation.
The selected multiplier refers to the current controller clock cycle (dead time= p1358 * p0115[0]).

r1359 CO: Angular difference / Angular difference

VECTOR_G

Can be changed: -	**Calculated:** -	**Access level:** 3
Data type: FloatingPoint32	**Dynamic index:** -	**Func. diagram:** -
P-Group: U/f open-loop control	**Units group:** -	**Unit selection:** -
Not for motor type: -	**Scaling:** p2005	**Expert list:** 1
Min	**Max**	**Factory setting**
- [°]	- [°]	- [°]

Description: Displays the output of the differential angular generation.

Note: The difference between the setpoint angle, read-in in p1356 and the actual value of the U/f control delayed with p1358 is displayed.

p1360 Braking chopper braking resistor cold / Br_chop R cold

VECTOR_G

Can be changed: U, T	**Calculated:** CALC_MOD_ALL	**Access level:** 3
Data type: FloatingPoint32	**Dynamic index:** -	**Func. diagram:** -
P-Group: U/f open-loop control	**Units group:** -	**Unit selection:** -
Not for motor type: -	**Scaling:** -	**Expert list:** 1
Min	**Max**	**Factory setting**
0.000 [ohm]	10.000 [ohm]	0.000 [ohm]

Description: Sets the braking resistor for the braking chopper.

© Siemens AG 2012 All Rights Reserved

Dependency: Select operation with braking resistor: p1300 = 15
Refer to: p1362, r1363, p1364
Refer to: A06921, F06922

p1362[0...1] Braking chopper activation threshold / Br_chop thresh

VECTOR_G

Can be changed: U, T	**Calculated:** CALC_MOD_ALL	**Access level:** 3
Data type: Unsigned16	**Dynamic index:** -	**Func. diagram:** -
P-Group: U/f open-loop control	**Units group:** -	**Unit selection:** -
Not for motor type: -	**Scaling:** -	**Expert list:** 1
Min	**Max**	**Factory setting**
0 [V]	1158 [V]	[0] 0 [V] [1] 60 [V]

Description: Sets the activation threshold for the brake chopper.
The hysteresis defines the range of the output voltage from zero up to the maximum voltage.

Index: [0] = Braking chopper threshold value
[1] = Braking chopper hysteresis

Dependency: Select operation with braking resistor: p1300 = 15
Refer to: p1360, r1363, p1364
Refer to: A06921, F06922

r1363 CO: Braking chopper output voltage / Br_chop U_output

VECTOR_G

Can be changed: -	**Calculated:** -	**Access level:** 3
Data type: FloatingPoint32	**Dynamic index:** -	**Func. diagram:** -
P-Group: Displays, signals	**Units group:** 5_1	**Unit selection:** p0505
Not for motor type: -	**Scaling:** p2001	**Expert list:** 1
Min	**Max**	**Factory setting**
- [Vrms]	- [Vrms]	- [Vrms]

Description: Displays the actual power unit output voltage (Motor Module) in braking chopper operation.

Dependency: Select operation with braking resistor: p1300 = 15
Refer to: p1360, p1362, p1364
Refer to: A06921, F06922

p1364 Braking chopper resistor asymmetry / Br_chop R asym

VECTOR_G

Can be changed: U, T	**Calculated:** -	**Access level:** 3
Data type: FloatingPoint32	**Dynamic index:** -	**Func. diagram:** -
P-Group: U/f open-loop control	**Units group:** -	**Unit selection:** -
Not for motor type: -	**Scaling:** PERCENT	**Expert list:** 1
Min	**Max**	**Factory setting**
0.00 [%]	100.00 [%]	25.00 [%]

Description: Sets the percentage value for the asymmetry detection for the braking chopper.

Dependency: Select operation with braking resistor: p1300 = 15
Refer to: p1360, p1362, r1363
Refer to: F06922

Note: Zero means no asymmetry detection.

© Siemens AG 2012 All Rights Reserved

p1400[0...n] Speed control configuration / n_ctrl config

VECTOR_G (n/M)

Can be changed: U, T	**Calculated:** -	**Access level:** 2
Data type: Unsigned32	**Dynamic index:** DDS, p0180	**Func. diagram:** 6490
P-Group: Closed-loop control	**Units group:** -	**Unit selection:** -
Not for motor type: REL	**Scaling:** -	**Expert list:** 1
Min	**Max**	**Factory setting**
-	-	0000 0000 0000 0000 1000 0000 0010 0001 bin

Description: Sets the configuration for the closed-loop speed control.

Bit field:

Bit	Signal name	1 signal	0 signal	FP
00	Automatic Kp/Tn adaptation active	Yes	No	6040
01	Sensorless vector control freeze I comp	Yes	No	6040
02	Acceleration pre-control source	External (p1495)	Internal (n_set)	6031
03	Reference model speed setpoint, I component	ON	OFF	6031
05	Kp/Tn adaptation active	Yes	No	6040
06	Free Tn adaptation active	Yes	No	6050
14	Torque pre-control	Always active	For n_ctrl enab	6060
15	Sensorless vector control, speed pre-control	Yes	No	6030
16	I component for limiting	Enable	Hold	6030
19	Anti-windup for integral component	Yes	No	6030
20	Acceleration model	ON	OFF	6030

Note:

Re bit 01:

When the bit is set, the I component of the speed controller is kept when changing into the open-loop controlled mode.

Re bit 16:

When the bit is set, the integral component of the speed controller is only held if it reaches the torque limit.

Re bit 19:

When this bit is set, speed overshoots when accelerating along the torque limit and for load surges are reduced. If the setpoint torque reaches the torque limit, then the integral component is set to the difference between the torque limit and P component.

Re bit 20:

The acceleration model for the speed setpoint is only active for encoderless vector control if p1496 is not zero.

p1401[0...n] Flux control configuration / Flux ctrl config

VECTOR_G (n/M)

Can be changed: U, T	**Calculated:** -	**Access level:** 3
Data type: Unsigned16	**Dynamic index:** DDS, p0180	**Func. diagram:** 6491
P-Group: Closed-loop control	**Units group:** -	**Unit selection:** -
Not for motor type: REL	**Scaling:** -	**Expert list:** 1
Min	**Max**	**Factory setting**
-	-	0000 0000 0000 1110 bin

Description: Sets the configuration for flux setpoint control

Bit field:

Bit	Signal name	1 signal	0 signal	FP
00	Flux setpoint soft starting active	Yes	No	6722, 6725
01	Flux setpoint differentiation active	Yes	No	6723, 6726
02	Flux build-up control active	Yes	No	6722, 6723, 6725, 6726
03	Flux characteristic, load-dependent	Yes	No	6725
04	Flux controller (ASM with encoder)	Yes	No	-
05	Flux impression (ASM with encoder)	with model chngov	From 30 % n_rated	-
06	Quick magnetizing	Yes	No	6722

© Siemens AG 2012 All Rights Reserved

07	Pre-control speed limitation	Yes	No	6640
08	Speed limiting controller	With M_limits	With I_limits	6640

Note: Re bit 00 (only for induction motors)

Initially, the flux is only established with a low rate of rise when magnetizing the induction motor. The flux setpoint p1570 is reached again at the end of the magnetizing time p0346.

Re bit 01 (only for induction motors)

Initially, the flux is only established with a low rate of rise when magnetizing the induction motor. The flux setpoint p1570 is reached again at the end of the magnetizing time p0346. When quick magnetizing (p1401.6 = 1) is selected, soft starting is internally de-activated and alarm A07416 is displayed.

The flux differentiation can be switched out if a significant ripple occurs in the field-generating current setpoint (r0075) when entering the field weakening range. However, this is not suitable for fast acceleration operations because then, the flux decays more slowly and the voltage limiting responds.

Re bit 02 (only for induction motors)

The flux build-up control operates during the magnetizing phase p0346 of the induction motor. If it is switched out, a constant current setpoint is injected and the flux is built up corresponding to the rotor time constant. When quick magnetizing (p1401.6 = 1) is selected and when flux build-up control is de-energized alarm A07416 is displayed.

Re bit 03:

The load-dependent calculation of the flux characteristic is only available for separately-excited synchronous motors.

Re bit 04 (only for induction motors with encoder):

The flux controller does not operate in the range of the current model and not in the range of the flux impression (refer to p1750.4).

Re bit 05 (only for induction motors with encoder):

Extremely rugged control operation is possible by directly toggling between the current model and flux impression. We therefore recommend that, in addition, the time-controlled model change is switched in (p1750.4 = 1) or the model changeover limits are significantly increased (p1752 > 0.35 * p0311; p1753 = 5 %).

Re bit 06 (not for induction motors):

Magnetizing is performed with maximum current (0.9 * r0067). With active identification of the stator resistance (see p0621) quick magnetizing is internally de-activated and alarm A07416 is displayed. During a flying restart of a rotating motor (see p1200) no quick magnetizing takes place.

Re bit 07:

if the speed of the drive exceeds the effective speed limit of the speed limiting controller, the torque limit is reduced linearly to zero as the deviation becomes greater. This reduces the integral component of the speed controller and, in turn, the overshoot during load shedding (see also F07901 and p2162).

Re bit 08:

The speed limiting controller sets the speed to maximum by opening the torque limits as far as the current limits (bit 8 = 0) or taking the torque limits into account (bit 8 = 1).

p1402[0...n] Closed-loop current control and motor model configuration / I_ctrl config

VECTOR_G (n/M)

Can be changed: U, T	**Calculated:** CALC_MOD_REG	**Access level:** 3
Data type: Unsigned16	**Dynamic index:** DDS, p0180	**Func. diagram:** -
P-Group: Closed-loop control	**Units group:** -	**Unit selection:** -
Not for motor type: REL	**Scaling:** -	**Expert list:** 1
Min	**Max**	**Factory setting**
-	-	0000 0000 0000 0001 bin

Description: Sets the configuration for the closed-loop control and the motor model.

Bit field:

Bit	Signal name	1 signal	0 signal	FP
00	Speed-following error correction active	Yes	No	-
02	Current controller adaptation active	Yes	No	-
08	Changeover current model/voltage model with speed setpoint	Yes	No	-

Note: Re bit 00:

When the bit is set, the speed following error is compensated that is obtained as a result of the smoothing time constant in p1441.

Re bit 02:

The current controller adaptation (p0391 ... p0393) is only calculated when the bit is set.

© Siemens AG 2012 All Rights Reserved

Re bit 08:
Only with encoderless control of separately excited synchronous motors.

r1406.4...15 CO/BO: Control word speed controller / STW n_ctrl

VECTOR_G (n/M)

Can be changed: -	**Calculated:** -	**Access level:** 3
Data type: Unsigned16	**Dynamic index:** -	**Func. diagram:** -
P-Group: Closed-loop control	**Units group:** -	**Unit selection:** -
Not for motor type: REL	**Scaling:** -	**Expert list:** 1
Min	**Max**	**Factory setting**
-	-	-

Description: Displays the control word of the speed controller.

Bit field:

Bit	Signal name	1 signal	0 signal	FP
04	Hold speed controller I component	Yes	No	6040
05	Set speed controller I component	Yes	No	6040
08	Travel to fixed stop	Yes	No	8012
11	Droop enable	Yes	No	6030
12	Torque control active	Yes	No	6060
15	Set speed adaptation controller I component	Yes	No	-

r1407.0...17 CO/BO: Status word speed controller / ZSW n_ctrl

VECTOR_G (n/M)

Can be changed: -	**Calculated:** -	**Access level:** 3
Data type: Unsigned32	**Dynamic index:** -	**Func. diagram:** 1530, 2522
P-Group: Closed-loop control	**Units group:** -	**Unit selection:** -
Not for motor type: REL	**Scaling:** -	**Expert list:** 1
Min	**Max**	**Factory setting**
-	-	-

Description: Displays the status word of the speed controller.

Bit field:

Bit	Signal name	1 signal	0 signal	FP
00	U/f control active	Yes	No	-
01	Encoderless operation active	Yes	No	-
02	Torque control active	Yes	No	6030, 6060, 8010
03	Speed control active	Yes	No	6040
05	Speed controller I component frozen	Yes	No	6040
06	Speed controller I component set	Yes	No	6040
07	Torque limit reached	Yes	No	6060
08	Upper torque limit active	Yes	No	6060
09	Lower torque limit active	Yes	No	6060
10	Droop enabled	Yes	No	6030
11	Speed setpoint limited	Yes	No	6030
12	Ramp-function generator set	Yes	No	-
13	Encoderless operation due to a fault	Yes	No	-
14	I/f control active	Yes	No	-
15	Torque limit reached (without pre-control)	Yes	No	6060
17	Speed limiting control active	Yes	No	6640

r1408.0...15 CO/BO: Status word current controller / ZSW I_ctrl

VECTOR_G (n/M)

Can be changed: -	**Calculated:** -	**Access level:** 3
Data type: Unsigned16	**Dynamic index:** -	**Func. diagram:** 2530
P-Group: Closed-loop control	**Units group:** -	**Unit selection:** -
Not for motor type: REL	**Scaling:** -	**Expert list:** 1
Min	**Max**	**Factory setting**
-	-	-

Description: Displays the current controller status word.

© Siemens AG 2012 All Rights Reserved

Bit field:

Bit	Signal name	1 signal	0 signal	FP
00	Current ctrl act	Active	Not active	-
01	Id control, I component limiting	Active	Not active	6714
03	Voltage limiting	Active	Not active	6714
10	Speed adaptation, limiting	Active	Not active	-
11	Speed adaptation, speed deviation	Out tolerance	In tolerance	6719
12	Motor stalled	Yes	No	6719, 8018
13	Separately excited synchronous motor is excited	Yes	No	-
14	Current model FEM: magnetizing excitation current limited to 0	Yes	No	-
15	Excitation current differential exceeded	Yes	No	-

Note: Re bit 11:

For operation with speed encoder, this bit is set as a result of steps/jumps in the speed signal (see p0492) or due to deviations at the adaptation controller output (see p1744).

p1416[0...n] Speed setpoint filter 1 time constant / n_set_filt 1 T

VECTOR_G (n/M)

Can be changed: U, T	**Calculated:** -	**Access level:** 3
Data type: FloatingPoint32	**Dynamic index:** DDS, p0180	**Func. diagram:** 1700, 6030
P-Group: Closed-loop control	**Units group:** -	**Unit selection:** -
Not for motor type: REL	**Scaling:** -	**Expert list:** 1
Min	**Max**	**Factory setting**
0.00 [ms]	5000.00 [ms]	0.00 [ms]

Description: Sets the time constant for the speed setpoint filter 1 (PT1).

p1428[0...n] Speed pre-control balancing dead time / n_prectrBal t_dead

VECTOR_G (n/M)

Can be changed: U, T	**Calculated:** -	**Access level:** 3
Data type: FloatingPoint32	**Dynamic index:** DDS, p0180	**Func. diagram:** 6031
P-Group: Closed-loop control	**Units group:** -	**Unit selection:** -
Not for motor type: REL	**Scaling:** -	**Expert list:** 1
Min	**Max**	**Factory setting**
0.0	3.0	0.0

Description: Sets the dead time to symmetrize the speed setpoint for active torque pre-control.

The selected multiplier refers to the speed controller clock cycle (dead time= p1428 * p0115[1]).

Dependency: In conjunction with p1429, this parameter can emulate the characteristics of how the torque is established (dynamic response of closed current control loop).

The parameter is only effective if the acceleration model is supplied using external acceleration signals (p1400.2 = 1). For p1400.2 = 0, a fixed dead time is used.

Refer to: p1429, p1511

p1429[0...n] Speed pre-control balancing time constant / n_prectr bal T

VECTOR_G (n/M)

Can be changed: U, T	**Calculated:** -	**Access level:** 3
Data type: FloatingPoint32	**Dynamic index:** DDS, p0180	**Func. diagram:** 5030, 5042, 5210, 6031
P-Group: Closed-loop control	**Units group:** -	**Unit selection:** -
Not for motor type: REL	**Scaling:** -	**Expert list:** 1
Min	**Max**	**Factory setting**
0.00 [ms]	10000.00 [ms]	0.00 [ms]

Description: Sets the time constant (PT1) for symmetrizing the speed setpoint for active torque pre-control.

Dependency: In conjunction with p1428, this parameter can emulate the characteristics of how torque is established (dynamic response of the closed current control loop).

© Siemens AG 2012 All Rights Reserved

For VECTOR (r0107) the following applies:

The parameter is only effective if the acceleration model is supplied using external acceleration signals (p1400.2 = 1). For p1400.2 = 0, time constant p1442 (or p1452 for sensorless vector control) is used.

Refer to: p1428, p1511

r1431 CO: Speed pre-control to motor model / n_prectrl mot_mod

VECTOR_G (n/M)

Can be changed: -	**Calculated:** -	**Access level:** 4
Data type: FloatingPoint32	**Dynamic index:** -	**Func. diagram:** 6030
P-Group: Closed-loop control	**Units group:** 3_1	**Unit selection:** p0505
Not for motor type: REL	**Scaling:** p2000	**Expert list:** 1
Min	**Max**	**Factory setting**
- [rpm]	- [rpm]	- [rpm]

Description: Displays the speed setpoint for pre-controlling the motor model with sensorless vector control.

Note: With p1400 bit 15 = 0 or encoderless torque control, the pre-control signal is kept continuously in the range of the voltage model.

p1433[0...n] Speed controller reference model natural frequency / n_ctrl RefMod fn

VECTOR_G (n/M)

Can be changed: U, T	**Calculated:** -	**Access level:** 3
Data type: FloatingPoint32	**Dynamic index:** DDS, p0180	**Func. diagram:** 5030, 6031
P-Group: Closed-loop control	**Units group:** -	**Unit selection:** -
Not for motor type: REL	**Scaling:** -	**Expert list:** 1
Min	**Max**	**Factory setting**
0.0 [Hz]	8000.0 [Hz]	0.0 [Hz]

Description: Sets the natural frequency of a PT2 element for the reference model of the speed controller.

Recommend.: The reference model is correctly set when the characteristics of p1439 (reference model output) and p1445 (actual speed value) are virtually identical when the I component of the speed controller is disabled.

Dependency: Together with p1434 and p1435, the characteristics (in the time domain) of the closed-loop speed control (P) can be emulated.

For VECTOR (r0107) the following applies:

The reference model is activated with p1400.3 = 1. For sensorless vector control (p1300 = 20) the reference model is disabled in open-loop speed controlled operation (refer to p1755).

Refer to: p1434, p1435

p1434[0...n] Speed controller reference model damping / n_ctrl RefMod D

VECTOR_G (n/M)

Can be changed: U, T	**Calculated:** -	**Access level:** 3
Data type: FloatingPoint32	**Dynamic index:** DDS, p0180	**Func. diagram:** 5030, 6031
P-Group: Closed-loop control	**Units group:** -	**Unit selection:** -
Not for motor type: REL	**Scaling:** -	**Expert list:** 1
Min	**Max**	**Factory setting**
0.000	5.000	1.000

Description: Sets the damping of a PT2 element for the reference model of the speed controller.

Recommend.: The reference model is correctly set when the characteristics of p1439 (reference model output) and p1445 (actual speed value) are virtually identical when the I component of the speed controller is disabled.

Dependency: In conjunction with p1433 and p1435, the characteristics (in time) of the P-controlled speed control loop can be emulated.

For VECTOR (r0107) the following applies:

The reference model is activated with p1400.3 = 1.

Refer to: p1433, p1435

© Siemens AG 2012 All Rights Reserved

p1435[0...n] Speed controller reference model dead time / n_ctrRefMod t_dead

VECTOR_G (n/M)

Can be changed: U, T	**Calculated:** -	**Access level:** 2
Data type: FloatingPoint32	**Dynamic index:** DDS, p0180	**Func. diagram:** 5030, 6031
P-Group: Closed-loop control	**Units group:** -	**Unit selection:** -
Not for motor type: REL	**Scaling:** -	**Expert list:** 1
Min	**Max**	**Factory setting**
0.00	3.00	0.00

Description: Sets the "fractional" dead time for the reference model of the speed controller.
This parameter emulates the computing dead time of the proportionally controlled speed control loop.
The selected multiplier refers to the speed controller clock cycle (dead time= p1435 * p0115[1]).

Recommend.: The reference model is correctly set when the characteristics of p1439 (reference model output) and p1445 (actual speed value) are virtually identical when the I component of the speed controller is disabled.

Dependency: In conjunction with p1433 and p1434, the characteristics (in time) of the P-controlled speed control loop can be emulated.
For VECTOR (r0107) the following applies:
The reference model is activated with p1400.3 = 1.
Refer to: p0115, p1433, p1434

r1436 CO: Speed controller reference model speed setpoint output / RefMod n_set outp

VECTOR_G (n/M)

Can be changed: -	**Calculated:** -	**Access level:** 3
Data type: FloatingPoint32	**Dynamic index:** -	**Func. diagram:** 5030, 6031
P-Group: Closed-loop control	**Units group:** 3_1	**Unit selection:** p0505
Not for motor type: REL	**Scaling:** p2000	**Expert list:** 1
Min	**Max**	**Factory setting**
- [rpm]	- [rpm]	- [rpm]

Description: Displays the speed setpoint at the output of the reference model.

Dependency: For VECTOR (r0107) the following applies:
The reference model is activated with p1400.3 = 1.

p1437[0...n] CI: Speed controller, reference model I component input / n_ctrRefMod I_comp

VECTOR_G (n/M)

Can be changed: T	**Calculated:** -	**Access level:** 3
Data type: Unsigned32 / FloatingPoint32	**Dynamic index:** CDS, p0170	**Func. diagram:** 6031
P-Group: Closed-loop control	**Units group:** -	**Unit selection:** -
Not for motor type: REL	**Scaling:** p2000	**Expert list:** 1
Min	**Max**	**Factory setting**
-	-	1436[0]

Description: Sets the signal source for speed setpoint for the integral component of the speed controller.

Dependency: The reference model is activated with p1400.3 = 1.
Refer to: p1400

Caution: In should be ensured that a speed setpoint is selected as signal source that corresponds to the setpoint for the P component of the speed controller.

r1438 CO: Speed controller, speed setpoint / n_ctrl n_set

VECTOR_G (n/M)

Can be changed: -	**Calculated:** -	**Access level:** 3
Data type: FloatingPoint32	**Dynamic index:** -	**Func. diagram:** 1550, 1590, 1700, 5030, 5040, 5042, 5210, 5300, 5620, 6031, 6040
P-Group: Closed-loop control	**Units group:** 3_1	**Unit selection:** p0505
Not for motor type: REL	**Scaling:** p2000	**Expert list:** 1
Min	**Max**	**Factory setting**
- [rpm]	- [rpm]	- [rpm]

Description: Displays the speed setpoint after setpoint limiting for the P component of the speed controller.

© Siemens AG 2012 All Rights Reserved

For U/f operation, the value that is displayed is of no relevance.

Dependency: Refer to: r1439

Note: In the standard state (the reference model is de-activated), r1438 = r1439.

r1439 Speed setpoint, I component / n_set I_comp

VECTOR_G (n/M)

Can be changed: -	**Calculated:** -	**Access level:** 3
Data type: FloatingPoint32	**Dynamic index:** -	**Func. diagram:** 5030, 5040, 6031
P-Group: Closed-loop control	**Units group:** 3_1	**Unit selection:** p0505
Not for motor type: REL	**Scaling:** p2000	**Expert list:** 1
Min	**Max**	**Factory setting**
- [rpm]	- [rpm]	- [rpm]

Description: Displays the speed setpoint for the I component of the speed controller (output of the reference model after the setpoint limiting).

Dependency: Refer to: r1438

Note: In the standard state (the reference model is de-activated), r1438 = r1439.

p1440[0...n] CI: Speed controller speed actual value / n_ctrl n_act

VECTOR_G (n/M)

Can be changed: T	**Calculated:** -	**Access level:** 3
Data type: Unsigned32 / FloatingPoint32	**Dynamic index:** CDS, p0170	**Func. diagram:** 6040
P-Group: Closed-loop control	**Units group:** -	**Unit selection:** -
Not for motor type: REL	**Scaling:** p2000	**Expert list:** 1
Min	**Max**	**Factory setting**
-	-	63[0]

Description: Sets the signal source for the speed actual value of the speed controller.

Dependency: Refer to: r1443

Danger: When using external speed actual values for the speed controller, for a direction of rotation change via p1821 = 1, then its polarity must also be changed, e.g. for an encoder DO via p0410. Otherwise, a positive coupling can occur in the speed control loop and the drive would then be accelerated up to the speed limit.

Caution: Speed control with encoder (p1300 = 21):

For the speed or position signal of the motor model there must always be a motor encoder available (evaluation via SMC/SMI, see p0400). The actual speed of the motor (r0061) and the position data for synchronous motors continue to come from this motor encoder and are not affected by the setting of p1440.

Interconnection of p1440:

If connector input p1440 is interconnected with an external speed actual value, the identical scaling of the speed should be observed (p2000).

Notice: Speed control without encoder (p1300 = 20):

Dependent upon the transmission path of the external speed signal there will be dead times which have to be taken into account when setting the speed controller parameters (p1470, p1472) and can lead to dynamic losses accordingly. It is for this reason that signal transmission times have to be kept as low as possible.

So that the speed controller can also work at standstill, set p1750.2 = 1 (closed-loop operation from zero speed for passive loads). If you do not make this setting, operation will switch to open-loop speed control in the low speed range, switching the closed-loop speed controller off and rendering the measured actual speed ineffective.

Note: Speed control with encoder (p1300 = 21):

An external speed signal should, on the average, correspond to the speed of the motor encoder (r0061).

p1441[0...n] Actual speed smoothing time / n_act T_smooth

VECTOR_G (n/M)

Can be changed: U, T	**Calculated:** -	**Access level:** 3
Data type: FloatingPoint32	**Dynamic index:** DDS, p0180	**Func. diagram:** 4710, 4715
P-Group: Closed-loop control	**Units group:** -	**Unit selection:** -
Not for motor type: REL	**Scaling:** -	**Expert list:** 1
Min	**Max**	**Factory setting**
0.00 [ms]	1000.00 [ms]	0.00 [ms]

Description: Sets the smoothing time constant (PT1) for the speed actual value.

© Siemens AG 2012 All Rights Reserved

Dependency: Refer to: r0063

Notice: Smoothing times above 20 ms are only possible if the drive is accelerated or braked with the appropriately long ramp-up/ramp-down times. Otherwise, significant torque errors can occur and there is the danger that the drive is powered down (tripped) with F07902 (motor stalled).

Note: The speed actual value should be smoothed for encoders with a low pulse number or for resolvers.

After this parameter has been changed, we recommend that the speed controller is adapted and/or the speed controller settings checked Kp (p1460) and Tn (p1462).

p1442[0...n] Speed controller speed actual value smoothing time / n_ctr n_act T_smth

VECTOR_G (n/M)	**Can be changed:** U, T	**Calculated:** CALC_MOD_ALL	**Access level:** 2
	Data type: FloatingPoint32	**Dynamic index:** DDS, p0180	**Func. diagram:** 1700, 6040
	P-Group: Closed-loop control	**Units group:** -	**Unit selection:** -
	Not for motor type: REL	**Scaling:** -	**Expert list:** 1
	Min	**Max**	**Factory setting**
	0.00 [ms]	32000.00 [ms]	4.00 [ms]

Description: Sets the smoothing time for the actual speed value of the speed controller for closed-loop control with encoder.

Note: The smoothing must be increased if there is gear backlash. For longer smoothing times, the integral time of the speed controller must also be increased (e.g. using p0340 = 4).

r1443 CO: Speed controller speed actual value at actual value input / n_ctrl n_act inp

VECTOR_G (n/M)	**Can be changed:** -	**Calculated:** -	**Access level:** 3
	Data type: FloatingPoint32	**Dynamic index:** -	**Func. diagram:** 6040
	P-Group: Closed-loop control	**Units group:** 3_1	**Unit selection:** p0505
	Not for motor type: REL	**Scaling:** p2000	**Expert list:** 1
	Min	**Max**	**Factory setting**
	- [rpm]	- [rpm]	- [rpm]

Description: Displays the speed actual value at the speed controller's free-wiring actual value input p1440.

Dependency: Refer to: p1440

Note: This speed signal is only used by the speed controller and not by the motor model.

r1444 Speed controller, speed setpoint steady-state (static) / n_ctrl n_set stat

VECTOR_G (n/M)	**Can be changed:** -	**Calculated:** -	**Access level:** 3
	Data type: FloatingPoint32	**Dynamic index:** -	**Func. diagram:** 5030
	P-Group: Closed-loop control	**Units group:** 3_1	**Unit selection:** p0505
	Not for motor type: REL	**Scaling:** p2000	**Expert list:** 1
	Min	**Max**	**Factory setting**
	- [rpm]	- [rpm]	- [rpm]

Description: Displays the sum of all speed setpoints that are present.

The following sources are available for the displayed setpoint:

- setpoint at the ramp-function generator input (r1119).
- speed setpoint 1 (p1155).
- speed setpoint 2 (p1160).
- speed setpoint for the speed pre-control (p1430).
- setpoint from DSC (for DSC active).
- setpoint via PC (for master control active).

Dependency: Refer to: r1119, p1155, p1160

© Siemens AG 2012 All Rights Reserved

r1445 CO: Actual speed smoothed / n_act smooth

VECTOR_G (n/M)

Can be changed: -	**Calculated:** -	**Access level:** 4
Data type: FloatingPoint32	**Dynamic index:** -	**Func. diagram:** 6040
P-Group: Closed-loop control	**Units group:** 3_1	**Unit selection:** p0505
Not for motor type: REL	**Scaling:** p2000	**Expert list:** 1
Min	**Max**	**Factory setting**
- [rpm]	- [rpm]	- [rpm]

Description: Displays the actual smoothed actual speed for speed control.

p1451[0...n] Motor model speed actual value smoothing time SLVC / Mot_mod n_act t_sm

VECTOR_G (n/M)

Can be changed: U, T	**Calculated:** -	**Access level:** 3
Data type: FloatingPoint32	**Dynamic index:** DDS, p0180	**Func. diagram:** -
P-Group: Closed-loop control	**Units group:** -	**Unit selection:** -
Not for motor type: ASM, PEM, REL	**Scaling:** -	**Expert list:** 1
Min	**Max**	**Factory setting**
0 [ms]	100 [ms]	4 [ms]

Description: Sets the smoothing time for the speed actual value calculated by the motor model in sensorless operation.

p1452[0...n] Speed controller speed actual value smoothing time (SLVC) / n_C n_act T_s SLVC

VECTOR_G (n/M)

Can be changed: U, T	**Calculated:** -	**Access level:** 2
Data type: FloatingPoint32	**Dynamic index:** DDS, p0180	**Func. diagram:** 1700, 6040
P-Group: Closed-loop control	**Units group:** -	**Unit selection:** -
Not for motor type: REL	**Scaling:** -	**Expert list:** 1
Min	**Max**	**Factory setting**
0.00 [ms]	32000.00 [ms]	10.00 [ms]

Description: Sets the smoothing time for the actual speed of the speed controller for encoderless closed-loop speed control.

Note: The smoothing must be increased if there is gear backlash. For longer smoothing times, the integral time of the speed controller must also be increased (e.g. using p0340 = 4).

r1454 CO: Speed controller system deviation I component / n_ctrl sys dev Tn

VECTOR_G (n/M)

Can be changed: -	**Calculated:** -	**Access level:** 3
Data type: FloatingPoint32	**Dynamic index:** -	**Func. diagram:** 6040
P-Group: Closed-loop control	**Units group:** 3_1	**Unit selection:** p0505
Not for motor type: REL	**Scaling:** p2000	**Expert list:** 1
Min	**Max**	**Factory setting**
- [rpm]	- [rpm]	- [rpm]

Description: Displays the system deviation of the I component of the speed controller.

When the reference model is inactive (p1433 = 0 Hz), this parameter corresponds to the system deviation of the complete PI controller (r1454 = r0064).

p1455[0...n] CI: Speed controller P gain adaptation signal / n_ctr adapt_sig Kp

VECTOR_G (n/M)

Can be changed: T	**Calculated:** -	**Access level:** 3
Data type: Unsigned32 / FloatingPoint32	**Dynamic index:** CDS, p0170	**Func. diagram:** 6050
P-Group: Closed-loop control	**Units group:** -	**Unit selection:** -
Not for motor type: REL	**Scaling:** PERCENT	**Expert list:** 1
Min	**Max**	**Factory setting**
-	-	0

Description: Sets the source for the adaptation signal to additionally adapt the P gain of the speed controller.

Dependency: Refer to: p1456, p1457, p1458, p1459

© Siemens AG 2012 All Rights Reserved

p1456[0...n] Speed controller P gain adaptation lower starting point / n_ctrl AdaptKpLow

VECTOR_G (n/M)	**Can be changed:** U, T	**Calculated:** -	**Access level:** 3
	Data type: FloatingPoint32	**Dynamic index:** DDS, p0180	**Func. diagram:** 6050
	P-Group: Closed-loop control	**Units group:** -	**Unit selection:** -
	Not for motor type: REL	**Scaling:** -	**Expert list:** 1
	Min	**Max**	**Factory setting**
	0.00 [%]	400.00 [%]	0.00 [%]

Description: Sets the lower starting point of the adaptation range for the additional adaptation of the P gain of the speed controller.

The values are in % and refer to the set source of the adaptation signal.

Dependency: Refer to: p1455, p1457, p1458, p1459

Note: If the upper transition point p1457 of the speed controller adaptation is set to lower values than the lower transition p1456, then the controller gain below p1457 is adapted with p1459 and above p1456, with p1458.

p1457[0...n] Speed controller P gain adaptation upper starting point / n_ctrl AdaptKp up

VECTOR_G (n/M)	**Can be changed:** U, T	**Calculated:** -	**Access level:** 3
	Data type: FloatingPoint32	**Dynamic index:** DDS, p0180	**Func. diagram:** 6050
	P-Group: Closed-loop control	**Units group:** -	**Unit selection:** -
	Not for motor type: REL	**Scaling:** -	**Expert list:** 1
	Min	**Max**	**Factory setting**
	0.00 [%]	400.00 [%]	0.00 [%]

Description: Sets the upper starting point of the adaptation range for the additional adaptation of the P gain of the speed controller.

The values are in % and refer to the set source of the adaptation signal.

Dependency: Refer to: p1455, p1456, p1458, p1459

Note: If the upper transition point p1457 of the speed controller adaptation is set to lower values than the lower transition p1456, then the controller gain below p1457 is adapted with p1459 and above p1456, with p1458.

p1458[0...n] Adaptation factor, lower / Adapt_factor lower

VECTOR_G (n/M)	**Can be changed:** U, T	**Calculated:** -	**Access level:** 3
	Data type: FloatingPoint32	**Dynamic index:** DDS, p0180	**Func. diagram:** 6050
	P-Group: Closed-loop control	**Units group:** -	**Unit selection:** -
	Not for motor type: REL	**Scaling:** -	**Expert list:** 1
	Min	**Max**	**Factory setting**
	0.0 [%]	200000.0 [%]	100.0 [%]

Description: Sets the adaptation factor before the adaptation range (0 % ... p1456) to additionally adapt the P gain of the speed/velocity controller.

Dependency: Refer to: p1455, p1456, p1457, p1459

Note: If the upper transition point p1457 of the speed controller adaptation is set to lower values than the lower transition p1456, then the controller gain below p1457 is adapted with p1459 and above p1456, with p1458.

p1459[0...n] Adaptation factor, upper / Adapt_factor upper

VECTOR_G (n/M)	**Can be changed:** U, T	**Calculated:** -	**Access level:** 3
	Data type: FloatingPoint32	**Dynamic index:** DDS, p0180	**Func. diagram:** 6050
	P-Group: Closed-loop control	**Units group:** -	**Unit selection:** -
	Not for motor type: REL	**Scaling:** -	**Expert list:** 1
	Min	**Max**	**Factory setting**
	0.0 [%]	200000.0 [%]	100.0 [%]

Description: Sets the adaptation factor after the adaptation range (> p1457) to additionally adapt the P gain of the speed/velocity controller.

Dependency: Refer to: p1455, p1456, p1457, p1458

Note: If the upper transition point p1457 of the speed controller adaptation is set to lower values than the lower transition p1456, then the controller gain below p1457 is adapted with p1459 and above p1456, with p1458.

© Siemens AG 2012 All Rights Reserved

p1460[0...n] Speed controller P gain adaptation speed, lower / n_ctrl Kp n lower

VECTOR_G (n/M)	**Can be changed:** U, T	**Calculated:** CALC_MOD_CON	**Access level:** 2
	Data type: FloatingPoint32	**Dynamic index:** DDS, p0180	**Func. diagram:** 1700, 6040
	P-Group: Closed-loop control	**Units group:** -	**Unit selection:** -
	Not for motor type: REL	**Scaling:** -	**Expert list:** 1
	Min	**Max**	**Factory setting**
	0.000	999999.000	0.300

Description: Sets the P gain of the speed controller before the adaptation speed range (0 ... p1464).

This value corresponds to the basic setting of the P gain of the speed controller without adaptation (p1461 = 100 %).

Dependency: For p0528 = 1, the speed controller gain is represented without any dimensions.

Refer to: p1461, p1464, p1465

p1461[0...n] Speed controller Kp adaptation speed, upper scaling / n_ctr Kp n up scal

VECTOR_G (n/M)	**Can be changed:** U, T	**Calculated:** CALC_MOD_CON	**Access level:** 3
	Data type: FloatingPoint32	**Dynamic index:** DDS, p0180	**Func. diagram:** 6050
	P-Group: Closed-loop control	**Units group:** -	**Unit selection:** -
	Not for motor type: REL	**Scaling:** -	**Expert list:** 1
	Min	**Max**	**Factory setting**
	0.0 [%]	200000.0 [%]	100.0 [%]

Description: Sets the P gain of the speed controller for the upper adaptation speed range (> p1465).

The entry is made referred to the P gain for the lower adaptation speed range of the speed controller (% referred to p1460).

Dependency: Refer to: p1460, p1464, p1465

Note: If the upper transition point p1465 of the speed controller adaptation is set to lower values than the lower transition p1464, then the controller gain below p1465 is adapted with p1461. This means that an adaptation can be implemented for low speeds without having to change the controller parameters.

p1462[0...n] Speed controller integral time adaptation speed lower / n_ctrl Tn n lower

VECTOR_G (n/M)	**Can be changed:** U, T	**Calculated:** CALC_MOD_CON	**Access level:** 2
	Data type: FloatingPoint32	**Dynamic index:** DDS, p0180	**Func. diagram:** 1700, 5040, 5042, 6040
	P-Group: Closed-loop control	**Units group:** -	**Unit selection:** -
	Not for motor type: REL	**Scaling:** -	**Expert list:** 1
	Min	**Max**	**Factory setting**
	0.00 [ms]	100000.00 [ms]	20.00 [ms]

Description: Sets the integration time of the speed controller before the adaptation speed range (0 ... p1464).

This value corresponds to the basic setting of the integral time of the speed controller without adaptation (p1461 = 100 %).

Dependency: Refer to: p1463, p1464, p1465

Note: The integral component is stopped if the complete controller output or the sum of controller output and torque pre-control reach the torque limit.

p1463[0...n] Speed controller Tn adaptation speed, upper scaling / n_ctr Tn n up scal

VECTOR_G (n/M)	**Can be changed:** U, T	**Calculated:** CALC_MOD_CON	**Access level:** 3
	Data type: FloatingPoint32	**Dynamic index:** DDS, p0180	**Func. diagram:** 6050
	P-Group: Closed-loop control	**Units group:** -	**Unit selection:** -
	Not for motor type: REL	**Scaling:** -	**Expert list:** 1
	Min	**Max**	**Factory setting**
	0.0 [%]	200000.0 [%]	100.0 [%]

Description: Sets the integral time of the speed controller after the adaptation speed range (> p1465).

The entry is made referred to the integral time for the lower adaptation speed range of the speed controller (% referred to p1462).

© Siemens AG 2012 All Rights Reserved

Dependency: Refer to: p1462, p1464, p1465

Note: If the upper transition point p1465 of the speed controller adaptation is set to lower values than the lower transition point p1464, then the controller integral time below p1465 is adapted with p1463. This means that an adaptation can be implemented for low speeds without having to change the controller parameters.

p1464[0...n] Speed controller adaptation speed, lower / n_ctrl n lower

VECTOR_G (n/M)	**Can be changed:** U, T	**Calculated:** CALC_MOD_CON	**Access level:** 3
	Data type: FloatingPoint32	**Dynamic index:** DDS, p0180	**Func. diagram:** 6050
	P-Group: Closed-loop control	**Units group:** 3_1	**Unit selection:** p0505
	Not for motor type: REL	**Scaling:** -	**Expert list:** 1
	Min	**Max**	**Factory setting**
	0.00 [rpm]	210000.00 [rpm]	0.00 [rpm]

Description: Sets the lower adaptation speed of the speed controller.
No adaptation is effective below this speed.

Dependency: Refer to: p1460, p1461, p1462, p1463, p1465

Note: If the upper transition point p1465 of the speed controller adaptation is set to lower values than the lower transition point p1464, then the controller below p1465 is adapted with p1461 or p1463. This means that an adaptation can be implemented for low speeds without having to change the controller parameters.

p1465[0...n] Speed controller adaptation speed, upper / n_ctrl n upper

VECTOR_G (n/M)	**Can be changed:** U, T	**Calculated:** CALC_MOD_CON	**Access level:** 3
	Data type: FloatingPoint32	**Dynamic index:** DDS, p0180	**Func. diagram:** 6050
	P-Group: Closed-loop control	**Units group:** 3_1	**Unit selection:** p0505
	Not for motor type: REL	**Scaling:** -	**Expert list:** 1
	Min	**Max**	**Factory setting**
	0.00 [rpm]	210000.00 [rpm]	210000.00 [rpm]

Description: Sets the upper adaptation speed of the speed controller.
No adaptation is effective above this speed.
For P gain, p1460 x p1461 is effective. For the integral time, p1462 x p1463 is effective.

Dependency: Refer to: p1460, p1461, p1462, p1463, p1464

Note: If the upper transition point p1465 of the speed controller adaptation is set to lower values than the lower transition point p1464, then the controller below p1465 is adapted with p1461 or p1463. This means that an adaptation can be implemented for low speeds without having to change the controller parameters.

p1466[0...n] CI: Speed controller P-gain scaling / n_ctrl Kp scal

VECTOR_G (n/M)	**Can be changed:** T	**Calculated:** -	**Access level:** 3
	Data type: Unsigned32 / FloatingPoint32	**Dynamic index:** CDS, p0170	**Func. diagram:** 6050
	P-Group: Closed-loop control	**Units group:** -	**Unit selection:** -
	Not for motor type: REL	**Scaling:** PERCENT	**Expert list:** 1
	Min	**Max**	**Factory setting**
	-	-	1

Description: Sets the signal source for the scaling of the P gain of the speed controller.
This also makes the effective P gain (including adaptations) scalable.

r1468 CO: Speed controller P-gain effective / n_ctr Kp eff

VECTOR_G (n/M)	**Can be changed:** -	**Calculated:** -	**Access level:** 3
	Data type: FloatingPoint32	**Dynamic index:** -	**Func. diagram:** 6040
	P-Group: Closed-loop control	**Units group:** -	**Unit selection:** -
	Not for motor type: REL	**Scaling:** -	**Expert list:** 1
	Min	**Max**	**Factory setting**
	-	-	-

Description: Displays the effective P gain of the speed controller.

Dependency: For p0528 = 1, the speed controller gain is represented without any dimensions. In this case, connector output signal r1468 is increased by a factor of 100 in order to improve the resolution.

© Siemens AG 2012 All Rights Reserved

r1469 Speed controller integral time effective / n_ctr Tn eff

VECTOR_G (n/M)	**Can be changed:** -	**Calculated:** -	**Access level:** 3
	Data type: FloatingPoint32	**Dynamic index:** -	**Func. diagram:** 5040, 5042, 6040
	P-Group: Closed-loop control	**Units group:** -	**Unit selection:** -
	Not for motor type: REL	**Scaling:** -	**Expert list:** 1
	Min - [ms]	**Max** - [ms]	**Factory setting** - [ms]

Description: Displays the effective integral time of the speed controller.

p1470[0...n] Speed controller encoderless operation P-gain / n_ctrl SLVC Kp

VECTOR_G (n/M)	**Can be changed:** U, T	**Calculated:** CALC_MOD_CON	**Access level:** 2
	Data type: FloatingPoint32	**Dynamic index:** DDS, p0180	**Func. diagram:** 6040, 6050
	P-Group: Closed-loop control	**Units group:** -	**Unit selection:** -
	Not for motor type: REL	**Scaling:** -	**Expert list:** 1
	Min 0.000	**Max** 999999.000	**Factory setting** 0.300

Description: Sets the P gain for encoderless operation for the speed controller.

Dependency: For p0528 = 1, the speed controller gain is represented without any dimensions.

Note: The product p0341 x p0342 is taken into account when automatically calculating the speed controller (p0340 = 1, 3, 4).

p1472[0...n] Speed controller encoderless operation integral time / n_ctrl SLVC Tn

VECTOR_G (n/M)	**Can be changed:** U, T	**Calculated:** CALC_MOD_CON	**Access level:** 2
	Data type: FloatingPoint32	**Dynamic index:** DDS, p0180	**Func. diagram:** 6040, 6050
	P-Group: Closed-loop control	**Units group:** -	**Unit selection:** -
	Not for motor type: REL	**Scaling:** -	**Expert list:** 1
	Min 0.0 [ms]	**Max** 100000.0 [ms]	**Factory setting** 20.0 [ms]

Description: Set the integral time for encoderless operation for the speed controller.

Note: The integral component is stopped if the complete controller output or the sum of controller output and torque pre-control reach the torque limit.

p1475[0...n] CI: Speed controller torque setting value for motor holding brake / n_ctrl M_sv MHB

VECTOR_G (n/M)	**Can be changed:** T	**Calculated:** -	**Access level:** 3
	Data type: Unsigned32 / FloatingPoint32	**Dynamic index:** CDS, p0170	**Func. diagram:** 6040
	P-Group: Closed-loop control	**Units group:** -	**Unit selection:** -
	Not for motor type: REL	**Scaling:** p2003	**Expert list:** 1
	Min -	**Max** -	**Factory setting** 0

Description: Sets the signal source for the torque setting value when starting up with motor holding brake.

Recommend.: To hold the actual torque when stopping the motor, you are advised to set p1400 bit 1 = 1. As a result, the integral component of the speed controller is frozen when changing to the open-loop controlled operating range.

Dependency: The switching in of the torque setting value for the motor holding brake has a higher priority than the setting of the integrator value using p1477 and p1478.

Note: The setting of the integral output of the speed controller begins after magnetizing (see p0346, r0056 bit 4) and ends at the end of the brake control opening time p1216. A setting value of zero means that no setting procedure will take place.

© Siemens AG 2012 All Rights Reserved

p1476[0...n] BI: Speed controller hold integrator / n_ctrl integ stop

VECTOR_G (n/M)	**Can be changed:** T	**Calculated:** -	**Access level:** 3
	Data type: Unsigned32 / Binary	**Dynamic index:** CDS, p0170	**Func. diagram:** 2520, 5040, 5042, 5210, 6040
	P-Group: Closed-loop control	**Units group:** -	**Unit selection:** -
	Not for motor type: REL	**Scaling:** -	**Expert list:** 1
	Min	**Max**	**Factory setting**
	-	-	0

Description: Sets the signal source to hold the integrator for the speed controller.

p1477[0...n] BI: Speed controller set integrator value / n_ctrl integ set

VECTOR_G (n/M)	**Can be changed:** T	**Calculated:** -	**Access level:** 3
	Data type: Unsigned32 / Binary	**Dynamic index:** CDS, p0170	**Func. diagram:** 2520, 5040, 5042, 5210, 6040
	P-Group: Closed-loop control	**Units group:** -	**Unit selection:** -
	Not for motor type: REL	**Scaling:** -	**Expert list:** 1
	Min	**Max**	**Factory setting**
	-	-	0

Description: Sets the signal source to set the integrator setting value (p1478).

Dependency: Refer to: p1478, p1479

Notice: The parameter may be protected as a result of p0922 or p2079 and cannot be changed.

Note: For the interface mode "SIMODRIVE 611 universal" (p2038 = 1), p1477 and p1478 are used for the signal STW2.6 (integrator inhibit, speed controller).

p1478[0...n] CI: Speed controller integrator setting value / n_ctr integ_setVal

VECTOR_G (n/M)	**Can be changed:** T	**Calculated:** -	**Access level:** 3
	Data type: Unsigned32 / FloatingPoint32	**Dynamic index:** CDS, p0170	**Func. diagram:** 6040
	P-Group: Closed-loop control	**Units group:** -	**Unit selection:** -
	Not for motor type: REL	**Scaling:** p2003	**Expert list:** 1
	Min	**Max**	**Factory setting**
	-	-	0

Description: Sets the signal source for the integrator setting value for the velocity controller.

The signal to set this integrator setting value is interconnected via p1477.

Dependency: The setting value of the speed controller integrator is weighted with the scaling factor of the signal source in p1479.

If p1478 is interconnected to the integral output of the speed controller (r1482), then after the magnetizing time (r0346) and if the speed controller is enabled, the integral component of the controller is set to the last value before the pulse inhibit. This value is set if no setting command (p1477) is interconnected or, at the instant that the pulses were inhibited, a setting command is available, which is not de-activated up to the next time that the pulses are inhibited. For sensorless vector control, in addition p1400.1 should be set to 1 so that when the drive is stopped, the integral component of the speed controller is not controlled down to zero.

In order that when setting the integrator output, only the static torque is detected, we recommend that the accelerating torque is completely pre-controlled (e.g. p1496).

If p1478 is interconnected to another output other than r1482, then after magnetizing and speed controller enable, the integral output is set once if the setting command is not interconnected (p1477 = 0).

Refer to: p1477, p1479

Notice: The parameter may be protected as a result of p0922 or p2079 and cannot be changed.

© Siemens AG 2012 All Rights Reserved

p1479[0...n] CI: Speed controller integrator setting value scaling / n_ctrl I_val scal

VECTOR_G (n/M)	**Can be changed:** T	**Calculated:** -	**Access level:** 3
	Data type: Unsigned32 / FloatingPoint32	**Dynamic index:** CDS, p0170	**Func. diagram:** 6040
	P-Group: Closed-loop control	**Units group:** -	**Unit selection:** -
	Not for motor type: REL	**Scaling:** PERCENT	**Expert list:** 1
	Min	**Max**	**Factory setting**
	-	-	1

Description: Sets the signal source for scaling the integrator setting value (p1478) of the speed controller.

Dependency: Refer to: p1477, p1478

r1480 CO: Speed controller PI torque output / n_ctrl PI-M_output

VECTOR_G (n/M)	**Can be changed:** -	**Calculated:** -	**Access level:** 3
	Data type: FloatingPoint32	**Dynamic index:** -	**Func. diagram:** 1590, 5040, 5042, 5060, 5210, 6060
	P-Group: Closed-loop control	**Units group:** 7_1	**Unit selection:** p0505
	Not for motor type: REL	**Scaling:** p2003	**Expert list:** 1
	Min	**Max**	**Factory setting**
	- [Nm]	- [Nm]	- [Nm]

Description: Displays the torque setpoint at the output of the PI speed controller.

r1481 CO: Speed controller P torque output / n_ctrl P-M_output

VECTOR_G (n/M)	**Can be changed:** -	**Calculated:** -	**Access level:** 3
	Data type: FloatingPoint32	**Dynamic index:** -	**Func. diagram:** 5040, 5042, 5210, 6040
	P-Group: Closed-loop control	**Units group:** 7_1	**Unit selection:** p0505
	Not for motor type: REL	**Scaling:** p2003	**Expert list:** 1
	Min	**Max**	**Factory setting**
	- [Nm]	- [Nm]	- [Nm]

Description: Displays the torque setpoint at the output of the P speed controller.

r1482 CO: Speed controller I torque output / n_ctrl I-M_output

VECTOR_G (n/M)	**Can be changed:** -	**Calculated:** -	**Access level:** 3
	Data type: FloatingPoint32	**Dynamic index:** -	**Func. diagram:** 5040, 5042, 5210, 6030, 6040
	P-Group: Closed-loop control	**Units group:** 7_1	**Unit selection:** p0505
	Not for motor type: REL	**Scaling:** p2003	**Expert list:** 1
	Min	**Max**	**Factory setting**
	- [Nm]	- [Nm]	- [Nm]

Description: Displays the torque setpoint at the output of the I speed controller.

p1486[0...n] CI: Droop compensation torque / Droop M_comp

VECTOR_G (n/M)	**Can be changed:** T	**Calculated:** -	**Access level:** 3
	Data type: Unsigned32 / FloatingPoint32	**Dynamic index:** CDS, p0170	**Func. diagram:** 6030
	P-Group: Closed-loop control	**Units group:** -	**Unit selection:** -
	Not for motor type: REL	**Scaling:** p2003	**Expert list:** 1
	Min	**Max**	**Factory setting**
	-	-	0

Description: Sets the signal source for the compensation torque to be output within the droop calculation.

p1486 should be connected with the torque setpoint (corresponding to the selection p1488) of the drive, with which load equalization should take place.

© Siemens AG 2012 All Rights Reserved

p1487[0...n] Droop compensation torque scaling / Droop M_comp scal

VECTOR_G (n/M)	**Can be changed:** U, T	**Calculated:** -	**Access level:** 3
	Data type: FloatingPoint32	**Dynamic index:** DDS, p0180	**Func. diagram:** 6030
	P-Group: Closed-loop control	**Units group:** -	**Unit selection:** -
	Not for motor type: REL	**Scaling:** PERCENT	**Expert list:** 1
	Min	**Max**	**Factory setting**
	-2000.0 [%]	2000.0 [%]	100.0 [%]

Description: Sets the scaling for the compensation torque within the droop calculation.

p1488[0...n] Droop input source / Droop input source

VECTOR_G (n/M)	**Can be changed:** U, T	**Calculated:** -	**Access level:** 3
	Data type: Integer16	**Dynamic index:** DDS, p0180	**Func. diagram:** 6030
	P-Group: Closed-loop control	**Units group:** -	**Unit selection:** -
	Not for motor type: REL	**Scaling:** -	**Expert list:** 1
	Min	**Max**	**Factory setting**
	0	3	0

Description: Sets the source for droop feedback.

With increasing torque, the speed setpoint is reduced (enabled using p1492), so that for mechanically coupled drives a load equalization (load compensation) is obtained. A load difference compensation is also possible, if p1486 is connected with the torque setpoint of the other drive.

Value:
0: Droop feedback not connected
1: Droop from torque setpoint
2: Droop from speed controller output
3: Droop from integral output, speed controller

Dependency: Refer to: p1486, p1487, p1489, r1490, p1492

Caution: For active acceleration precontrol of the speed controller (refer to p1496), it is not recommended that p1488 is set to 1, as this could result in positive coupling effects. Instead of this, as source of the droop feedback, the output signal of the speed controller should be used, which generally sets the load torque.

p1489[0...n] Droop feedback scaling / Droop scaling

VECTOR_G (n/M)	**Can be changed:** U, T	**Calculated:** -	**Access level:** 3
	Data type: FloatingPoint32	**Dynamic index:** DDS, p0180	**Func. diagram:** 6030
	P-Group: Closed-loop control	**Units group:** -	**Unit selection:** -
	Not for motor type: REL	**Scaling:** -	**Expert list:** 1
	Min	**Max**	**Factory setting**
	0.000	0.500	0.050

Description: Sets the scaling for the droop feedback

Dependency: Refer to: p1486, p1487, p1488, r1490, p1492

Note: Example:

A value of 0.05 means that for a torque equal to the rated motor torque, the rated motor speed is reduced by 5 %.

r1490 CO: Droop feedback speed reduction / Droop n_reduction

VECTOR_G (n/M)	**Can be changed:** -	**Calculated:** -	**Access level:** 3
	Data type: FloatingPoint32	**Dynamic index:** -	**Func. diagram:** 6030
	P-Group: Closed-loop control	**Units group:** 3_1	**Unit selection:** p0505
	Not for motor type: REL	**Scaling:** p2000	**Expert list:** 1
	Min	**Max**	**Factory setting**
	- [rpm]	- [rpm]	- [rpm]

Description: Displays the output signal of the droop calculation. The droop feedback result is subtracted from the speed setpoint when activated (p1492).

Dependency: Refer to: p1486, p1487, p1488, p1489, p1492

© Siemens AG 2012 All Rights Reserved

p1492[0...n] BI: Droop feedback enable / Droop enable

VECTOR_G (n/M)	**Can be changed:** U, T	**Calculated:** -	**Access level:** 3
	Data type: Unsigned32 / Binary	**Dynamic index:** CDS, p0170	**Func. diagram:** 2520, 6030
	P-Group: Closed-loop control	**Units group:** -	**Unit selection:** -
	Not for motor type: REL	**Scaling:** -	**Expert list:** 1
	Min	**Max**	**Factory setting**
	-	-	0

Description: Enables the droop to be applied to the speed/velocity setpoint.

Dependency: Refer to: p1486, p1487, p1488, p1489, r1490

Note: Even when not enabled, the droop speed is calculated but not subtracted from the setpoint speed. This makes it possible to subtract the result of this calculation from the speed of another drive.

r1493 CO: Moment of inertia, total / M_inertia total

VECTOR_G (n/M)	**Can be changed:** -	**Calculated:** -	**Access level:** 3
	Data type: FloatingPoint32	**Dynamic index:** -	**Func. diagram:** 6031
	P-Group: Closed-loop control	**Units group:** 25_1	**Unit selection:** p0100
	Not for motor type: REL	**Scaling:** -	**Expert list:** 1
	Min	**Max**	**Factory setting**
	- [kgm²]	- [kgm²]	- [kgm²]

Description: Displays the parameterized total moment of inertia ((p0341 * p0342) + p1496) without evaluation by the scaling via p1497.

p1495[0...n] CI: Acceleration pre-control / a_prectrl

VECTOR_G (n/M)	**Can be changed:** T	**Calculated:** -	**Access level:** 3
	Data type: Unsigned32 / FloatingPoint32	**Dynamic index:** CDS, p0170	**Func. diagram:** 6031
	P-Group: Closed-loop control	**Units group:** -	**Unit selection:** -
	Not for motor type: REL	**Scaling:** p2007	**Expert list:** 1
	Min	**Max**	**Factory setting**
	-	-	0

Description: Sets the signal source for the acceleration pre-control.

Dependency: The signal source for the acceleration is activated with p1400.2 = 1.
For p1400.2 = 0, the acceleration pre-control is calculated from the speed setpoint change from r0062.
For p1400.2 = 0 and activate reference model (p1400.3 = 1) the acceleration pre-control is switched out.
Refer to: p1400, p1496

Note: If the acceleration is entered as external signal, then the accelerating torque is calculated as follows (r1518):
r1518 = acceleration (% of p2007) / 100 % * (p2007 * 60 s) / p0311 * r0345 / 1 s * r0333

p1496[0...n] Acceleration pre-control scaling / a_prectrl scal

VECTOR_G (n/M)	**Can be changed:** U, T	**Calculated:** -	**Access level:** 3
	Data type: FloatingPoint32	**Dynamic index:** DDS, p0180	**Func. diagram:** 1700, 6031
	P-Group: Closed-loop control	**Units group:** -	**Unit selection:** -
	Not for motor type: REL	**Scaling:** -	**Expert list:** 1
	Min	**Max**	**Factory setting**
	0.0 [%]	10000.0 [%]	0.0 [%]

Description: Sets the scaling for the acceleration pre-control of the speed/velocity controller.

Dependency: When the reference model is activated (p1400.3 = 1) and for an internal acceleration pre-control (p1400.2 = 0), the acceleration pre-control is switched out (disabled). The reference model (p1400.3 = 1) and external acceleration pre-control (p1400.2 = 1) can be operated together.
Refer to: p0341, p0342

© Siemens AG 2012 All Rights Reserved

Warning: The acceleration precontrol r1518 is kept at the old value if the ramp-function generator tracking (r1199.5) is active or the ramp-function generator output is set (r1199.3). This is used to avoid torque peaks. Depending on the application, it may therefore be necessary to disable the ramp-function generator tracking (p1145 = 0) or the acceleration precontrol (p1496 = 0).

The acceleration precontrol is set to zero, if the Vdc control is active (r0056.14/15).

Note: The parameter is set to 100% by the rotating measurement (refer to p1960).

The acceleration pre-control may not be used if the speed setpoint manifests significant ripple (e.g. analog setpoint) and the rounding-off in the speed ramp-function generator is disabled.

We also recommend that the pre-control mode is not used if there is gearbox backlash.

p1497[0...n] CI: Moment of inertia, scaling / M_mom inert scal

VECTOR_G (n/M)

Can be changed: U, T	**Calculated:** -	**Access level:** 3
Data type: Unsigned32 / FloatingPoint32	**Dynamic index:** CDS, p0170	**Func. diagram:** 5042, 5210, 6030, 6031
P-Group: Closed-loop control	**Units group:** -	**Unit selection:** -
Not for motor type: REL	**Scaling:** PERCENT	**Expert list:** 1
Min	**Max**	**Factory setting**
-	-	1

Description: Sets the signal source for scaling the moment of inertia.

p1499[0...n] Accelerating for torque control, scaling / a for M_ctrl scal

VECTOR_G (n/M)

Can be changed: U, T	**Calculated:** -	**Access level:** 3
Data type: FloatingPoint32	**Dynamic index:** DDS, p0180	**Func. diagram:** 6030
P-Group: Closed-loop control	**Units group:** -	**Unit selection:** -
Not for motor type: REL	**Scaling:** -	**Expert list:** 1
Min	**Max**	**Factory setting**
0.0 [%]	400.0 [%]	100.0 [%]

Description: Sets the scaling for the acceleration integrator at low speeds (only for encoderless torque control).

Dependency: Refer to: p0341, p0342

p1500[0...n] Macro Connector Inputs (CI) for torque setpoints / Macro CI M_set

VECTOR_G

Can be changed: C2(1), T	**Calculated:** -	**Access level:** 1
Data type: Unsigned32	**Dynamic index:** CDS, p0170	**Func. diagram:** -
P-Group: Commands	**Units group:** -	**Unit selection:** -
Not for motor type: REL	**Scaling:** -	**Expert list:** 1
Min	**Max**	**Factory setting**
0	999999	0

Description: Runs the corresponding macro files.

The Connector Inputs (CI) for the torque setpoints of the appropriate Command Data Set (CDS) are appropriately interconnected.

The selected macro file must be available on the memory card/device memory.

Example:

p1500 = 6 --> the macro file PM000006.ACX is run.

Dependency: Refer to: p0015, p0700, p1000, r8573

Caution: When executing a specific macro, the corresponding programmed settings are made and become active.

Notice: No errors were issued during quick commissioning (p3900 = 1) when writing to parameters of the QUICK_IBN group!

Note: The macros in the specified directory are displayed in r8573. r8573 is not in the expert list of the commissioning software.

Macros available as standard are described in the technical documentation of the particular product.

CI: Connector Input

© Siemens AG 2012 All Rights Reserved

p1501[0...n] BI: Change over between closed-loop speed/torque control / Changeov n/M_ctrl

VECTOR_G (n/M)	**Can be changed:** U, T	**Calculated:** -	**Access level:** 3
	Data type: Unsigned32 / Binary	**Dynamic index:** CDS, p0170	**Func. diagram:** 1700, 2520, 5060, 6060
	P-Group: Closed-loop control	**Units group:** -	**Unit selection:** -
	Not for motor type: REL	**Scaling:** -	**Expert list:** 1
	Min	**Max**	**Factory setting**
	-	-	0

Description: Sets the signal source for toggling between speed and torque control.

Dependency: The input connectors to enter the torque are provided using p1511, p1512 and p1513.
Refer to: p1300

Caution: If the closed-loop torque control is not activated (p1300) and a change is made to closed-loop torque control (p1501), OFF1 (p0840) does not have its own braking response but pulse suppression when standstill is detected (p1226, p1227).

Notice: The parameter may be protected as a result of p0922 or p2079 and cannot be changed.

Note: 0 signal: Closed-loop speed control
1 signal: Closed-loop torque control

p1503[0...n] CI: Torque setpoint / M_set

VECTOR_G (n/M)	**Can be changed:** T	**Calculated:** -	**Access level:** 3
	Data type: Unsigned32 / FloatingPoint32	**Dynamic index:** CDS, p0170	**Func. diagram:** 1700, 6060
	P-Group: Closed-loop control	**Units group:** -	**Unit selection:** -
	Not for motor type: REL	**Scaling:** p2003	**Expert list:** 1
	Min	**Max**	**Factory setting**
	-	-	0

Description: Sets the signal source for the torque setpoint for torque control.

Note: A change is made to closed-loop torque control if, in p1300, closed-loop torque control was selected or if the selection was made using the changeover source in p1501.
it is also possible to change over in operation using p1501.

r1508 CO: Torque setpoint before supplementary torque / M_set bef. M_suppl

VECTOR_G (n/M)	**Can be changed:** -	**Calculated:** -	**Access level:** 2
	Data type: FloatingPoint32	**Dynamic index:** -	**Func. diagram:** 6030, 6060, 6722
	P-Group: Closed-loop control	**Units group:** 7_1	**Unit selection:** p0505
	Not for motor type: REL	**Scaling:** p2003	**Expert list:** 1
	Min	**Max**	**Factory setting**
	- [Nm]	- [Nm]	- [Nm]

Description: Displays the torque setpoint before entering the supplementary torque.
For closed-loop speed control, r1508 corresponds to the speed controller output; for closed-loop torque control, r1508 corresponds to the torque setpoint of the signal source assigned in p1503.

p1511[0...n] CI: Supplementary torque 1 / M_suppl 1

VECTOR_G (n/M)	**Can be changed:** T	**Calculated:** -	**Access level:** 3
	Data type: Unsigned32 / FloatingPoint32	**Dynamic index:** CDS, p0170	**Func. diagram:** 5060, 6060
	P-Group: Closed-loop control	**Units group:** -	**Unit selection:** -
	Not for motor type: REL	**Scaling:** p2003	**Expert list:** 1
	Min	**Max**	**Factory setting**
	-	-	0

Description: Sets the signal source for supplementary torque 1.

© Siemens AG 2012 All Rights Reserved

p1512[0...n] CI: Supplementary torque 1 scaling / M_suppl 1 scal

VECTOR_G (n/M)

Can be changed: T	**Calculated:** -	**Access level:** 3
Data type: Unsigned32 / FloatingPoint32	**Dynamic index:** CDS, p0170	**Func. diagram:** 5060, 6060
P-Group: Closed-loop control	**Units group:** -	**Unit selection:** -
Not for motor type: REL	**Scaling:** PERCENT	**Expert list:** 1
Min	**Max**	**Factory setting**
-	-	0

Description: Sets the signal source for scaling the supplementary torque 1.

p1513[0...n] CI: Supplementary torque 2 / M_suppl 2

VECTOR_G (n/M)

Can be changed: T	**Calculated:** -	**Access level:** 3
Data type: Unsigned32 / FloatingPoint32	**Dynamic index:** CDS, p0170	**Func. diagram:** 5060, 6060
P-Group: Closed-loop control	**Units group:** -	**Unit selection:** -
Not for motor type: REL	**Scaling:** p2003	**Expert list:** 1
Min	**Max**	**Factory setting**
-	-	0

Description: Sets the signal source for supplementary torque 2.

p1514[0...n] Supplementary torque 2 scaling / M_suppl 2 scal

VECTOR_G (n/M)

Can be changed: U, T	**Calculated:** -	**Access level:** 3
Data type: FloatingPoint32	**Dynamic index:** DDS, p0180	**Func. diagram:** 1700, 6060
P-Group: Closed-loop control	**Units group:** -	**Unit selection:** -
Not for motor type: REL	**Scaling:** PERCENT	**Expert list:** 1
Min	**Max**	**Factory setting**
-2000.0 [%]	2000.0 [%]	100.0 [%]

Description: Sets the scaling for supplementary torque 2.

r1515 Supplementary torque total / M_suppl total

VECTOR_G (n/M)

Can be changed: -	**Calculated:** -	**Access level:** 2
Data type: FloatingPoint32	**Dynamic index:** -	**Func. diagram:** 5040, 5060
P-Group: Closed-loop control	**Units group:** 7_1	**Unit selection:** p0505
Not for motor type: REL	**Scaling:** p2003	**Expert list:** 1
Min	**Max**	**Factory setting**
- [Nm]	- [Nm]	- [Nm]

Description: Displays the total supplementary torque.
The displayed value is the total of supplementary torque values 1 and 2 (p1511, p1512, p1513, p1514).

r1516 CO: Supplementary torque and acceleration torque / M_suppl + M_accel

VECTOR_G (n/M)

Can be changed: -	**Calculated:** -	**Access level:** 2
Data type: FloatingPoint32	**Dynamic index:** -	**Func. diagram:** 6060
P-Group: Closed-loop control	**Units group:** 7_1	**Unit selection:** p0505
Not for motor type: REL	**Scaling:** p2003	**Expert list:** 1
Min	**Max**	**Factory setting**
- [Nm]	- [Nm]	- [Nm]

Description: Displays the total supplementary torque and the accelerating torque.
The displayed value is the total of the smoothed supplementary torque and the accelerating torque (p1516 = p1518[1] + r1515).

© Siemens AG 2012 All Rights Reserved

p1517[0...n] Accelerating torque smoothing time constant / M_accel T_smooth

VECTOR_G (n/M)	**Can be changed:** U, T	**Calculated:** -	**Access level:** 3
	Data type: FloatingPoint32	**Dynamic index:** DDS, p0180	**Func. diagram:** 5042, 5210, 6060
	P-Group: Closed-loop control	**Units group:** -	**Unit selection:** -
	Not for motor type: REL	**Scaling:** -	**Expert list:** 1
	Min 0.00 [ms]	**Max** 100.00 [ms]	**Factory setting** 4.00 [ms]

Description: Sets the smoothing time constant of the accelerating torque.

Note: For servo drives, the following applies:

- For p1402.4 = 1, the highest dynamic performance is achieved with p1517 = 0 ms.
- In encoderless operation, p1517 should be set >= 0.5 ms; for an induction motor with current displacement rotor p1517 >= 20 ms is recommended.

For vector drives, the following applies:

- The acceleration pre-control is inhibited if the smoothing is set to the maximum value.

r1518[0...1] CO: Accelerating torque / M_accel

VECTOR_G (n/M)	**Can be changed:** -	**Calculated:** -	**Access level:** 3
	Data type: FloatingPoint32	**Dynamic index:** -	**Func. diagram:** 6060
	P-Group: Closed-loop control	**Units group:** 7_1	**Unit selection:** p0505
	Not for motor type: REL	**Scaling:** p2003	**Expert list:** 1
	Min - [Nm]	**Max** - [Nm]	**Factory setting** - [Nm]

Description: Displays the accelerating torque for pre-control of the speed controller.

Index: [0] = Unsmoothed
[1] = Smoothed

Dependency: Refer to: p0341, p0342, p1496

p1520[0...n] CO: Torque limit upper / M_max upper

VECTOR_G (n/M)	**Can be changed:** U, T	**Calculated:** CALC_MOD_LIM_REF	**Access level:** 2
	Data type: FloatingPoint32	**Dynamic index:** DDS, p0180	**Func. diagram:** 1700, 6630
	P-Group: Closed-loop control	**Units group:** 7_1	**Unit selection:** p0505
	Not for motor type: REL	**Scaling:** p2003	**Expert list:** 1
	Min -1000000.00 [Nm]	**Max** 20000000.00 [Nm]	**Factory setting** 0.00 [Nm]

Description: Sets the fixed, upper torque limit.

Dependency: Refer to: p1521, p1522, p1523, r1538, r1539

Danger: Negative values when setting the upper torque limit (p1520 < 0) can result in the motor accelerating in an uncontrollable fashion.

Notice: A BICO interconnection to a parameter that belongs to a drive data set always acts on the effective data set.

Note: The torque limit is limited to 400% of the rated motor torque. When automatically calculating the motor/closed-loop control parameters (p0340), the torque limit is set to match the current limit (p0640).

© Siemens AG 2012 All Rights Reserved

p1521[0...n] CO: Torque limit lower / M_max lower

VECTOR_G (n/M)	**Can be changed:** U, T	**Calculated:** CALC_MOD_LIM_REF	**Access level:** 2
	Data type: FloatingPoint32	**Dynamic index:** DDS, p0180	**Func. diagram:** 5620, 5630
	P-Group: Closed-loop control	**Units group:** 7_1	**Unit selection:** p0505
	Not for motor type: REL	**Scaling:** p2003	**Expert list:** 1
	Min -20000000.00 [Nm]	**Max** 1000000.00 [Nm]	**Factory setting** 0.00 [Nm]

Description: Sets the fixed, lower torque limit.

Dependency: Refer to: p1520, p1522, p1523

Danger: Positive values when setting the lower torque limit (p1521 > 0) can result in the motor accelerating in an uncontrollable fashion.

Notice: A BICO interconnection to a parameter that belongs to a drive data set always acts on the effective data set.

Note: The torque limit is limited to 400% of the rated motor torque. When automatically calculating the motor/closed-loop control parameters (p0340), the torque limit is set to match the current limit (p0640).

p1522[0...n] CI: Torque limit upper / M_max upper

VECTOR_G (n/M)	**Can be changed:** T	**Calculated:** -	**Access level:** 3
	Data type: Unsigned32 / FloatingPoint32	**Dynamic index:** CDS, p0170	**Func. diagram:** 6630
	P-Group: Closed-loop control	**Units group:** -	**Unit selection:** -
	Not for motor type: REL	**Scaling:** p2003	**Expert list:** 1
	Min -	**Max** -	**Factory setting** 1520[0]

Description: Sets the signal source for the upper torque limit.

Dependency: Refer to: p1520, p1521, p1523

Danger: Negative values resulting from the signal source and scaling can cause the motor to accelerate in an uncontrolled manner.

p1523[0...n] CI: Torque limit lower / M_max lower

VECTOR_G (n/M)	**Can be changed:** T	**Calculated:** -	**Access level:** 3
	Data type: Unsigned32 / FloatingPoint32	**Dynamic index:** CDS, p0170	**Func. diagram:** 1700, 6630
	P-Group: Closed-loop control	**Units group:** -	**Unit selection:** -
	Not for motor type: REL	**Scaling:** p2003	**Expert list:** 1
	Min -	**Max** -	**Factory setting** 1521[0]

Description: Sets the signal source for the lower torque limit.

Dependency: Refer to: p1520, p1521, p1522

Danger: Positive values resulting from the signal source and scaling can cause the motor to accelerate in an uncontrolled manner.

p1524[0...n] CO: Torque limit upper scaling / M_max upper scal

VECTOR_G (n/M)	**Can be changed:** U, T	**Calculated:** -	**Access level:** 3
	Data type: FloatingPoint32	**Dynamic index:** DDS, p0180	**Func. diagram:** 6630
	P-Group: Closed-loop control	**Units group:** -	**Unit selection:** -
	Not for motor type: REL	**Scaling:** PERCENT	**Expert list:** 1
	Min -2000.0 [%]	**Max** 2000.0 [%]	**Factory setting** 100.0 [%]

Description: Sets the scaling for the upper torque limit.

© Siemens AG 2012 All Rights Reserved

Notice: A BICO interconnection to a parameter that belongs to a drive data set always acts on the effective data set.
Note: This parameter can be freely interconnected.
The value has the meaning stated above if it is interconnected from connector input p1528.

p1525[0...n] CO: Torque limit lower scaling / M_max lower scal

VECTOR_G (n/M)	**Can be changed:** U, T	**Calculated:** -	**Access level:** 3
	Data type: FloatingPoint32	**Dynamic index:** DDS, p0180	**Func. diagram:** 6630
	P-Group: Closed-loop control	**Units group:** -	**Unit selection:** -
	Not for motor type: REL	**Scaling:** PERCENT	**Expert list:** 1
	Min -2000.0 [%]	**Max** 2000.0 [%]	**Factory setting** 100.0 [%]

Description: Sets the scaling for the lower torque limit.
Notice: A BICO interconnection to a parameter that belongs to a drive data set always acts on the effective data set.
Note: This parameter can be freely interconnected.
The value has the meaning stated above if it is interconnected from connector input p1528.

r1526 CO: Torque limit upper without offset / M_max up w/o offs

VECTOR_G (n/M)	**Can be changed:** -	**Calculated:** -	**Access level:** 3
	Data type: FloatingPoint32	**Dynamic index:** -	**Func. diagram:** 6060, 6630, 6640
	P-Group: Closed-loop control	**Units group:** 7_1	**Unit selection:** p0505
	Not for motor type: REL	**Scaling:** p2003	**Expert list:** 1
	Min - [Nm]	**Max** - [Nm]	**Factory setting** - [Nm]

Description: Displays the upper torque limit of all torque limits without offset.
Dependency: Refer to: p1520, p1521, p1522, p1523, p1528, p1529

r1527 CO: Torque limit lower without offset / M_max low w/o offs

VECTOR_G (n/M)	**Can be changed:** -	**Calculated:** -	**Access level:** 3
	Data type: FloatingPoint32	**Dynamic index:** -	**Func. diagram:** 6060, 6630, 6640
	P-Group: Closed-loop control	**Units group:** 7_1	**Unit selection:** p0505
	Not for motor type: REL	**Scaling:** p2003	**Expert list:** 1
	Min - [Nm]	**Max** - [Nm]	**Factory setting** - [Nm]

Description: Displays the lower torque limit of all torque limits without offset.
Dependency: Refer to: p1520, p1521, p1522, p1523, p1528, p1529

p1528[0...n] CI: Torque limit upper scaling / M_max upper scal

VECTOR_G (n/M)	**Can be changed:** T	**Calculated:** -	**Access level:** 3
	Data type: Unsigned32 / FloatingPoint32	**Dynamic index:** CDS, p0170	**Func. diagram:** 6630
	P-Group: Closed-loop control	**Units group:** -	**Unit selection:** -
	Not for motor type: REL	**Scaling:** PERCENT	**Expert list:** 1
	Min -	**Max** -	**Factory setting** 1524[0]

Description: Sets the signal source for the scaling of the upper torque limit in p1522.
Danger: For p1400.4 = 0 (torque limiting, upper/lower) the following applies:
Negative values resulting from the signal source and scaling can cause the motor to accelerate in an uncontrolled manner.
Notice: The parameter may be protected as a result of p0922 or p2079 and cannot be changed.

© Siemens AG 2012 All Rights Reserved

p1529[0...n] CI: Torque limit lower scaling / M_max lower scal

VECTOR_G (n/M)	**Can be changed:** T	**Calculated:** -	**Access level:** 3
	Data type: Unsigned32 / FloatingPoint32	**Dynamic index:** CDS, p0170	**Func. diagram:** 6630
	P-Group: Closed-loop control	**Units group:** -	**Unit selection:** -
	Not for motor type: REL	**Scaling:** PERCENT	**Expert list:** 1
	Min -	**Max** -	**Factory setting** 1525[0]

Description: Sets the signal source for the scaling of the lower torque limit in p1523.

Danger: For p1400.4 = 0 (torque limiting, upper/lower) the following applies:

Positive values resulting from the signal source and scaling can cause the motor to accelerate in an uncontrolled manner.

Notice: The parameter may be protected as a result of p0922 or p2079 and cannot be changed.

p1530[0...n] Power limit motoring / P_max mot

VECTOR_G (n/M)	**Can be changed:** U, T	**Calculated:** CALC_MOD_LIM_REF	**Access level:** 2
	Data type: FloatingPoint32	**Dynamic index:** DDS, p0180	**Func. diagram:** 6640
	P-Group: Closed-loop control	**Units group:** 14_5	**Unit selection:** p0505
	Not for motor type: REL	**Scaling:** -	**Expert list:** 1
	Min 0.00 [kW]	**Max** 100000.00 [kW]	**Factory setting** 0.00 [kW]

Description: Sets the power limit when motoring.

Dependency: Refer to: p0500, p1531

Note: The power limit is limited to 300% of the rated motor power.

p1531[0...n] Power limit regenerative / P_max gen

VECTOR_G (n/M)	**Can be changed:** U, T	**Calculated:** CALC_MOD_LIM_REF	**Access level:** 2
	Data type: FloatingPoint32	**Dynamic index:** DDS, p0180	**Func. diagram:** 6640
	P-Group: Closed-loop control	**Units group:** 14_5	**Unit selection:** p0505
	Not for motor type: REL	**Scaling:** -	**Expert list:** 1
	Min -100000.00 [kW]	**Max** -0.01 [kW]	**Factory setting** -0.01 [kW]

Description: Sets the regenerative power limit.

Dependency: Refer to: p0500, p1530

Note: The power limit is limited to 300% of the rated motor power.

For power units without regenerative feedback into the line supply, the regenerative power limit is pre-set to 30% of the motoring power limit p1530 and in the ratio rated drive converter power to rated motor power. If a braking resistor is connected to the DC link, then the power limit can be correspondingly increased.

r1533 Current limit torque-generating total / Iq_max total

VECTOR_G (n/M)	**Can be changed:** -	**Calculated:** -	**Access level:** 3
	Data type: FloatingPoint32	**Dynamic index:** -	**Func. diagram:** 5640, 5722, 6640
	P-Group: Displays, signals	**Units group:** 6_2	**Unit selection:** p0505
	Not for motor type: -	**Scaling:** p2002	**Expert list:** 1
	Min - [Arms]	**Max** - [Arms]	**Factory setting** - [Arms]

Description: Displays the maximum torque/force generating current as a result if all current limits.

© Siemens AG 2012 All Rights Reserved

r1536[0...1] Current limit maximum torque-generating current / Isq_max

VECTOR_G (n/M)	**Can be changed:** -	**Calculated:** -	**Access level:** 4
	Data type: FloatingPoint32	**Dynamic index:** -	**Func. diagram:** 6640, 6710
	P-Group: Closed-loop control	**Units group:** 6_2	**Unit selection:** p0505
	Not for motor type: REL	**Scaling:** p2002	**Expert list:** 1
	Min - [Arms]	**Max** - [Arms]	**Factory setting** - [Arms]

Description: Displays the maximum limit for the torque-generating current component.
Index 0 indicates the signal limited by the Vdc controller.

Index: [0] = Limited
[1] = Unlimited

r1537[0...1] Current limit minimum torque-generating current / Isq_min

VECTOR_G (n/M)	**Can be changed:** -	**Calculated:** -	**Access level:** 4
	Data type: FloatingPoint32	**Dynamic index:** -	**Func. diagram:** 6640, 6710
	P-Group: Closed-loop control	**Units group:** 6_2	**Unit selection:** p0505
	Not for motor type: REL	**Scaling:** p2002	**Expert list:** 1
	Min - [Arms]	**Max** - [Arms]	**Factory setting** - [Arms]

Description: Displays the minimum limit for the torque-generating current component.
Index 0 indicates the signal limited by the Vdc controller.

Index: [0] = Limited
[1] = Unlimited

r1538 CO: Upper effective torque limit / M_max upper eff

VECTOR_G (n/M)	**Can be changed:** -	**Calculated:** -	**Access level:** 2
	Data type: FloatingPoint32	**Dynamic index:** -	**Func. diagram:** 1610, 1700, 5610, 5650, 6060, 6640
	P-Group: Closed-loop control	**Units group:** 7_1	**Unit selection:** p0505
	Not for motor type: REL	**Scaling:** p2003	**Expert list:** 1
	Min - [Nm]	**Max** - [Nm]	**Factory setting** - [Nm]

Description: Displays the currently effective upper torque limit.

Note: The effective upper torque limit is reduced with respect to the selected upper torque limit p1520, if the current limit p0640 is reduced or the rated magnetizing current of the induction motor p0320 is increased.
The following applies in the case of VECTOR: This may be the case for rotating measurements (see p1960).
The following applies in the case of VECTOR: Further variable torque limiting is possible (e.g. binector input p1540).
The torque limit p1520 can be re-calculated using p0340 = 1, 3 or 5.

r1539 CO: Lower effective torque limit / M_max lower eff

VECTOR_G (n/M)	**Can be changed:** -	**Calculated:** -	**Access level:** 2
	Data type: FloatingPoint32	**Dynamic index:** -	**Func. diagram:** 1610, 1700, 5610, 5650, 6060, 6640
	P-Group: Closed-loop control	**Units group:** 7_1	**Unit selection:** p0505
	Not for motor type: REL	**Scaling:** p2003	**Expert list:** 1
	Min - [Nm]	**Max** - [Nm]	**Factory setting** - [Nm]

Description: Displays the currently effective lower torque limit.

Note: The effective lower torque limit is reduced with respect to the selected lower torque limit p1521, if the current limit p0640 is reduced or the rated magnetizing current of the induction motor p0320 is increased.
The following applies in the case of VECTOR: This may be the case for rotating measurements (see p1960).

© Siemens AG 2012 All Rights Reserved

The following applies in the case of VECTOR: Further variable torque limiting is possible (e.g. binector input p1541).
The torque limit p1520 can be re-calculated using p0340 = 1, 3 or 5.

p1540[0...n] CI: Torque limit speed controller upper scaling / M_max n-ctr upScal

VECTOR_G (n/M)

Can be changed: T	**Calculated:** -	**Access level:** 3
Data type: Unsigned32 / FloatingPoint32	**Dynamic index:** CDS, p0170	**Func. diagram:** 1700, 6060
P-Group: Closed-loop control	**Units group:** -	**Unit selection:** -
Not for motor type: REL	**Scaling:** PERCENT	**Expert list:** 1
Min	**Max**	**Factory setting**
-	-	1

Description: Sets the signal source for the scaling of the upper torque limiting to limit the speed controller output.

p1541[0...n] CI: Torque limit. speed controller lower scaling / M_max nctr lowScal

VECTOR_G (n/M)

Can be changed: T	**Calculated:** -	**Access level:** 3
Data type: Unsigned32 / FloatingPoint32	**Dynamic index:** CDS, p0170	**Func. diagram:** 1700, 6060
P-Group: Closed-loop control	**Units group:** -	**Unit selection:** -
Not for motor type: REL	**Scaling:** PERCENT	**Expert list:** 1
Min	**Max**	**Factory setting**
-	-	1

Description: Sets the signal source for the scaling of the lower torque limiting to limit the speed controller output.

p1545[0...n] BI: Activates travel to a fixed stop / TfS activation

VECTOR_G (n/M)

Can be changed: T	**Calculated:** -	**Access level:** 3
Data type: Unsigned32 / Binary	**Dynamic index:** CDS, p0170	**Func. diagram:** 2520, 3617, 8012
P-Group: Commands	**Units group:** -	**Unit selection:** -
Not for motor type: REL	**Scaling:** -	**Expert list:** 1
Min	**Max**	**Factory setting**
-	-	0

Description: Sets the signal source to activate/de-activate the "travel to fixed stop" function
1: Travel to fixed stop is active
0: Travel to fixed stop is inactive

Notice: The parameter may be protected as a result of p0922 or p2079 and cannot be changed.

Note: EPOS uses the parameter (refer to p2686).
When traveling to fixed stop, the fault F07900 "motor blocked" is suppressed.

r1547[0...1] CO: Torque limit for speed controller output / M_max outp n_ctrl

VECTOR_G (n/M)

Can be changed: -	**Calculated:** -	**Access level:** 3
Data type: FloatingPoint32	**Dynamic index:** -	**Func. diagram:** 6060
P-Group: Closed-loop control	**Units group:** 7_1	**Unit selection:** p0505
Not for motor type: REL	**Scaling:** p2003	**Expert list:** 1
Min	**Max**	**Factory setting**
- [Nm]	- [Nm]	- [Nm]

Description: Displays the torque limit to limit the speed controller output.

Index: [0] = Upper limit
[1] = Lower limit

© Siemens AG 2012 All Rights Reserved

r1548[0...1] CO: Stall current limit torque-generating maximum / Isq_max stall

VECTOR_G (n/M)

Can be changed: -	**Calculated:** -	**Access level:** 4
Data type: FloatingPoint32	**Dynamic index:** -	**Func. diagram:** -
P-Group: Closed-loop control	**Units group:** 6_2	**Unit selection:** p0505
Not for motor type: REL	**Scaling:** p2002	**Expert list:** 1
Min	**Max**	**Factory setting**
- [Arms]	- [Arms]	- [Arms]

Description: Displays the limit for the torque-generating current component using the stall calculation, the current limit of the Motor Module as well as the parameterization in p0640.

Index: [0] = Upper limit
[1] = Lower limit

p1551[0...n] BI: Torque limit variable/fixed signal source / M_lim var/fixS_src

VECTOR_G (n/M)

Can be changed: U, T	**Calculated:** -	**Access level:** 3
Data type: Unsigned32 / Binary	**Dynamic index:** CDS, p0170	**Func. diagram:** 5620, 5630, 6060, 6630
P-Group: Closed-loop control	**Units group:** -	**Unit selection:** -
Not for motor type: REL	**Scaling:** -	**Expert list:** 1
Min	**Max**	**Factory setting**
-	-	1

Description: Sets the signal source to change over the torque limits between variable and fixed torque limit.
1 signal from BI: p1551:
The variable torque limit applies (fixed torque limit + scaling).
0 signal from BI: p1551:
The fixed torque limit applies.
Example:
In order that for a Quick Stop (OFF3) the fixed torque limit is effective, BI: p1551 must be interconnected to r0899.5.

p1552[0...n] CI: Torque limit upper scaling without offset / M_max up w/o offs

VECTOR_G (n/M)

Can be changed: T	**Calculated:** -	**Access level:** 3
Data type: Unsigned32 / FloatingPoint32	**Dynamic index:** CDS, p0170	**Func. diagram:** 6060
P-Group: Closed-loop control	**Units group:** -	**Unit selection:** -
Not for motor type: REL	**Scaling:** PERCENT	**Expert list:** 1
Min	**Max**	**Factory setting**
-	-	1

Description: Sets the signal source for the scaling of the upper torque limiting to limit the speed controller output without taking into account the current and power limits.

p1554[0...n] CI: Torque limit lower scaling without offset / M_max low w/o offs

VECTOR_G (n/M)

Can be changed: T	**Calculated:** -	**Access level:** 3
Data type: Unsigned32 / FloatingPoint32	**Dynamic index:** CDS, p0170	**Func. diagram:** 6060
P-Group: Closed-loop control	**Units group:** -	**Unit selection:** -
Not for motor type: REL	**Scaling:** PERCENT	**Expert list:** 1
Min	**Max**	**Factory setting**
-	-	1

Description: Sets the signal source for the scaling of the lower torque limiting to limit the speed controller output without taking into account the current and power limits.

© Siemens AG 2012 All Rights Reserved

p1555[0...n] CI: Power limit / P_max

VECTOR_G (n/M)	**Can be changed:** T	**Calculated:** -	**Access level:** 3
	Data type: Unsigned32 / FloatingPoint32	**Dynamic index:** CDS, p0170	**Func. diagram:** 6640
	P-Group: Closed-loop control	**Units group:** -	**Unit selection:** -
	Not for motor type: REL	**Scaling:** r2004	**Expert list:** 1
	Min	**Max**	**Factory setting**
	-	-	1

Description: Sets the signal source for the motoring and negative regenerative power limit.

Dependency: Refer to: p1530, p1531

Note: The resulting motoring power limit is the minimum from p1530 and the signal which is read in.
The resulting regenerative power limit is the maximum from p1531 and the negative signal which is read in.

p1556[0...n] Power limit scaling / P_max scal

VECTOR_G (n/M)	**Can be changed:** T	**Calculated:** -	**Access level:** 2
	Data type: FloatingPoint32	**Dynamic index:** DDS, p0180	**Func. diagram:** 6640
	P-Group: Closed-loop control	**Units group:** -	**Unit selection:** -
	Not for motor type: REL	**Scaling:** -	**Expert list:** 1
	Min	**Max**	**Factory setting**
	0.00	340.28235E36	0.00

Description: Sets the scaling of the signal source for the motoring and negative regenerative power limit.
0 signifies no power limiting.

p1569[0...n] CI: Supplementary torque 3 / M_suppl 3

VECTOR_G (n/M)	**Can be changed:** T	**Calculated:** -	**Access level:** 2
	Data type: Unsigned32 / FloatingPoint32	**Dynamic index:** CDS, p0170	**Func. diagram:** 7010
	P-Group: Functions	**Units group:** -	**Unit selection:** -
	Not for motor type: REL	**Scaling:** p2003	**Expert list:** 1
	Min	**Max**	**Factory setting**
	-	-	3841[0]

Description: Sets the signal source for supplementary torque 3.

Dependency: Refer to: p3842

Notice: The signal input is after the torque limit (r1538, r1539). For vector drives, the signals that are entered are only limited by the current and power limits.

Note: The signal input is preferably used to enter the friction characteristic. The friction compensation is also effective if the speed controller output reaches its torque limits, but the current limits have still not been reached (this only applies to vector drives).

p1570[0...n] CO: Flux setpoint / Flux setpoint

VECTOR_G (n/M)	**Can be changed:** U, T	**Calculated:** -	**Access level:** 2
	Data type: FloatingPoint32	**Dynamic index:** DDS, p0180	**Func. diagram:** 6722
	P-Group: Closed-loop control	**Units group:** -	**Unit selection:** -
	Not for motor type: PEM, REL	**Scaling:** PERCENT	**Expert list:** 1
	Min	**Max**	**Factory setting**
	50.0 [%]	200.0 [%]	100.0 [%]

Description: Sets the flux setpoint referred to rated motor flux.

Notice: A BICO interconnection to a parameter that belongs to a drive data set always acts on the effective data set.

Note: For p1570 > 100%, the flux setpoint increases as a function of the load from 100% (no-load operation) to the setting in p1570 (above rated motor torque), if p1580 > 0% has been set.

© Siemens AG 2012 All Rights Reserved

p1571[0...n] CI: Supplementary flux setpoint / Suppl flux setp

VECTOR_G (n/M)	**Can be changed:** T	**Calculated:** -	**Access level:** 3
	Data type: Unsigned32 / FloatingPoint32	**Dynamic index:** CDS, p0170	**Func. diagram:** 6725
	P-Group: Closed-loop control	**Units group:** -	**Unit selection:** -
	Not for motor type: ASM, PEM, REL	**Scaling:** PERCENT	**Expert list:** 1
	Min	**Max**	**Factory setting**
	-	-	0

Description: Sets the signal source for the supplementary flux setpoint.

Notice: Low flux setpoints can cause the drive to stall at higher loads. This is the reason that the flux setpoint should only be adapted for slow load changes.

Note: The supplementary flux setpoint is limited to +/- 50 %.

p1572[0...n] Supplementary flux setpoint / Suppl flux setp

VECTOR_G (n/M)	**Can be changed:** U, T	**Calculated:** -	**Access level:** 4
	Data type: FloatingPoint32	**Dynamic index:** DDS, p0180	**Func. diagram:** 6726
	P-Group: Closed-loop control	**Units group:** -	**Unit selection:** -
	Not for motor type: ASM, PEM, REL	**Scaling:** PERCENT	**Expert list:** 1
	Min	**Max**	**Factory setting**
	0.0 [%]	100.0 [%]	0.0 [%]

Description: Sets the supplementary flux setpoint for the flux controller.
The value is referred to the rated motor flux.

Notice: The parameter should be set back to 0% again for normal closed-loop control operation.

Note: The parameter is used to optimize the flux controller. The current model is not influenced by the setting.

p1573[0...n] Flux threshold value magnetizing / Flux thresh magnet

VECTOR_G (n/M)	**Can be changed:** U, T	**Calculated:** -	**Access level:** 3
	Data type: FloatingPoint32	**Dynamic index:** DDS, p0180	**Func. diagram:** 6722
	P-Group: Closed-loop control	**Units group:** -	**Unit selection:** -
	Not for motor type: PEM, REL	**Scaling:** PERCENT	**Expert list:** 1
	Min	**Max**	**Factory setting**
	10.0 [%]	200.0 [%]	100.0 [%]

Description: Sets the flux threshold value for enabling the speed setpoint and the end of magnetizing (r0056.4).

Note: The parameter only has an influence if the flux actual value reaches the threshold value p1573 more quickly during magnetizing than the time set in p0346.
The parameter has no influence for flying restart (see p1200) and after DC braking (see p1231).

p1574[0...n] Voltage reserve dynamic / U_reserve dyn

VECTOR_G (n/M)	**Can be changed:** U, T	**Calculated:** CALC_MOD_LIM_REF	**Access level:** 3
	Data type: FloatingPoint32	**Dynamic index:** DDS, p0180	**Func. diagram:** 6723, 6724
	P-Group: Closed-loop control	**Units group:** 5_1	**Unit selection:** p0505
	Not for motor type: REL	**Scaling:** -	**Expert list:** 1
	Min	**Max**	**Factory setting**
	0.0 [Vrms]	150.0 [Vrms]	10.0 [Vrms]

Description: Sets a dynamic voltage reserve.

Note: In the field weakening range, it must be expected that the control dynamic performance is somewhat restricted due to the limited possibilities of controlling/adjusting the voltage. This can be improved by increasing the voltage reserve. Increasing the reserve reduces the steady-state maximum output voltage (r0071).

© Siemens AG 2012 All Rights Reserved

p1576[0...n] Flux boost, adaptation speed, lower / Flux boost n lower

VECTOR_G (n/M)	**Can be changed:** U, T	**Calculated:** CALC_MOD_ALL	**Access level:** 3
	Data type: FloatingPoint32	**Dynamic index:** DDS, p0180	**Func. diagram:** 6725
	P-Group: Closed-loop control	**Units group:** 3_1	**Unit selection:** p0505
	Not for motor type: ASM, PEM, REL	**Scaling:** -	**Expert list:** 1
	Min	**Max**	**Factory setting**
	0.00 [rpm]	210000.00 [rpm]	0.00 [rpm]

Description: Sets the lower adaptation speed of the flux boost.
Below this speed, p1570 is set as reference (setpoint) flux.

p1577[0...n] Flux boost adaptation speed, upper / Flux boost n upper

VECTOR_G (n/M)	**Can be changed:** U, T	**Calculated:** CALC_MOD_ALL	**Access level:** 3
	Data type: FloatingPoint32	**Dynamic index:** DDS, p0180	**Func. diagram:** 6725
	P-Group: Closed-loop control	**Units group:** -	**Unit selection:** -
	Not for motor type: ASM, PEM, REL	**Scaling:** -	**Expert list:** 1
	Min	**Max**	**Factory setting**
	1.0 [%]	10000.0 [%]	200.0 [%]

Description: Sets the upper adaptation speed of the flux boost.
Above this speed, the rated motor flux (100 %) is set as reference (setpoint) flux.

Dependency: The parameter value refers to the lower adaptation speed of the flux boost.
Refer to: p1576

p1580[0...n] Efficiency optimization / Efficiency opt.

VECTOR_G (n/M)	**Can be changed:** U, T	**Calculated:** -	**Access level:** 2
	Data type: FloatingPoint32	**Dynamic index:** DDS, p0180	**Func. diagram:** 6722
	P-Group: Closed-loop control	**Units group:** -	**Unit selection:** -
	Not for motor type: PEM, REL, FEM	**Scaling:** -	**Expert list:** 1
	Min	**Max**	**Factory setting**
	0 [%]	100 [%]	0 [%]

Description: Sets the efficiency optimization.
When optimizing the efficiency, the flux setpoint of the closed-loop control is adapted as a function of the load.
For p1580 = 100 %, under no-load operating conditions, the flux setpoint is reduced to 50 % of the rated motor flux.

Note: It only makes sense to activate this function if the dynamic response requirements of the speed controller are low.
In order to avoid oscillations, if required, the speed controller parameters should be adapted (increase Tn, reduce Kp).
Further, the smoothing time of the flux setpoint filter (p1582) should be increased.

p1582[0...n] Flux setpoint smoothing time / Flux setp T_smth

VECTOR_G (n/M)	**Can be changed:** U, T	**Calculated:** CALC_MOD_REG	**Access level:** 3
	Data type: FloatingPoint32	**Dynamic index:** DDS, p0180	**Func. diagram:** 6722, 6724, 6725
	P-Group: Closed-loop control	**Units group:** -	**Unit selection:** -
	Not for motor type: REL	**Scaling:** -	**Expert list:** 1
	Min	**Max**	**Factory setting**
	4 [ms]	5000 [ms]	15 [ms]

Description: Sets the smoothing time for the flux setpoint.

© Siemens AG 2012 All Rights Reserved

r1583 Flux setpoint smoothed / Flux setp smooth

VECTOR_G (n/M)	**Can be changed:** -	**Calculated:** -	**Access level:** 4
	Data type: FloatingPoint32	**Dynamic index:** -	**Func. diagram:** 6722, 6723, 6724
	P-Group: Closed-loop control	**Units group:** -	**Unit selection:** -
	Not for motor type: REL	**Scaling:** PERCENT	**Expert list:** 1
	Min - [%]	**Max** - [%]	**Factory setting** - [%]

Description: Displays the smoothed flux setpoint.
The value is referred to the rated motor flux.

p1584[0...n] Field weakening operation, flux setpoint smoothing time / Field weak T_smth

VECTOR_G (n/M)	**Can be changed:** U, T	**Calculated:** CALC_MOD_REG	**Access level:** 3
	Data type: FloatingPoint32	**Dynamic index:** DDS, p0180	**Func. diagram:** 6722
	P-Group: Closed-loop control	**Units group:** -	**Unit selection:** -
	Not for motor type: PEM, REL	**Scaling:** -	**Expert list:** 1
	Min 0 [ms]	**Max** 20000 [ms]	**Factory setting** 0 [ms]

Description: Sets the smoothing time for the flux setpoint in the field-weakening range

Recommend.: Smoothing should be especially used if there is no regenerative feedback into the line supply. This means that the DC link voltage can quickly increase in regenerative operation

Note: Only the flux setpoint rise is smoothed

p1585[0...n] Flux actual value, smoothing time / Flux actVal T_smth

VECTOR_G (n/M)	**Can be changed:** U, T	**Calculated:** -	**Access level:** 3
	Data type: FloatingPoint32	**Dynamic index:** DDS, p0180	**Func. diagram:** 6726
	P-Group: Closed-loop control	**Units group:** -	**Unit selection:** -
	Not for motor type: ASM, PEM, REL	**Scaling:** -	**Expert list:** 1
	Min 0 [ms]	**Max** 1000 [ms]	**Factory setting** 0 [ms]

Description: Sets the smoothing time for the flux actual value.

p1586[0...n] Field weakening characteristic, scaling / Field weak scal

VECTOR_G (n/M)	**Can be changed:** U, T	**Calculated:** -	**Access level:** 3
	Data type: FloatingPoint32	**Dynamic index:** DDS, p0180	**Func. diagram:** -
	P-Group: Closed-loop control	**Units group:** -	**Unit selection:** -
	Not for motor type: REL, FEM	**Scaling:** -	**Expert list:** 1
	Min 80.0 [%]	**Max** 120.0 [%]	**Factory setting** 100.0 [%]

Description: Sets the scaling of the pre-control characteristic for the start of field weakening.
For values above 100 % and for partial load situations, the field weakening starts at higher speeds.

Note: If the start of field weakening is shifted to lower speeds, then the voltage reserve is increased for partial load situations.
If the start of field weakening is shifted to higher speeds, the voltage reserve is appropriately reduced so that for fast load changes, it can be expected that this will have a negative impact on the dynamic performance.

© Siemens AG 2012 All Rights Reserved

r1589 Field-weakening current, pre-control value / I_FieldWeak prectr

VECTOR_G (n/M)

Can be changed: -	**Calculated:** -	**Access level:** 4
Data type: FloatingPoint32	**Dynamic index:** -	**Func. diagram:** 6724
P-Group: Closed-loop control	**Units group:** 6_2	**Unit selection:** p0505
Not for motor type: ASM, REL, FEM	**Scaling:** p2002	**Expert list:** 1
Min	**Max**	**Factory setting**
- [Arms]	- [Arms]	- [Arms]

Description: Displays the pre-control value for the field weakening current.

p1590[0...n] Flux controller P gain / Flux controller Kp

VECTOR_G (n/M)

Can be changed: U, T	**Calculated:** CALC_MOD_CON	**Access level:** 4
Data type: FloatingPoint32	**Dynamic index:** DDS, p0180	**Func. diagram:** 6723
P-Group: Closed-loop control	**Units group:** -	**Unit selection:** -
Not for motor type: PEM, REL	**Scaling:** -	**Expert list:** 1
Min	**Max**	**Factory setting**
0.0	999999.0	10.0

Description: Sets the proportional gain for the flux controller.

Note: The value is automatically pre-assigned dependent on the motor when the drive system is first commissioned.
When calculating controller parameters (p0340 = 4), this value is re-calculated.

p1592[0...n] Flux controller integral time / Flux controller Tn

VECTOR_G (n/M)

Can be changed: U, T	**Calculated:** CALC_MOD_CON	**Access level:** 4
Data type: FloatingPoint32	**Dynamic index:** DDS, p0180	**Func. diagram:** 6723
P-Group: Closed-loop control	**Units group:** -	**Unit selection:** -
Not for motor type: PEM, REL	**Scaling:** -	**Expert list:** 1
Min	**Max**	**Factory setting**
0 [ms]	10000 [ms]	30 [ms]

Description: Sets the integral time for the flux controller.

Note: The value is automatically pre-assigned dependent on the motor when the drive system is first commissioned.
When calculating controller parameters (p0340 = 4), this value is re-calculated.

r1593[0...1] CO: Field weakening controller / flux controller output / Field/Fl_ctrl outp

VECTOR_G (n/M)

Can be changed: -	**Calculated:** -	**Access level:** 4
Data type: FloatingPoint32	**Dynamic index:** -	**Func. diagram:** 6723, 6724, 6726
P-Group: Closed-loop control	**Units group:** 6_2	**Unit selection:** p0505
Not for motor type: REL	**Scaling:** p2002	**Expert list:** 1
Min	**Max**	**Factory setting**
- [Arms]	- [Arms]	- [Arms]

Description: Displays the output of the field weakening controller (synchronous motor) or the output of the flux controller (separately-excited synchronous motor, induction motor).

Index: [0] = PI output
[1] = I output

p1594[0...n] Field-weakening controller, P gain / Field_ctrl Kp

VECTOR_G (n/M)

Can be changed: U, T	**Calculated:** -	**Access level:** 4
Data type: FloatingPoint32	**Dynamic index:** DDS, p0180	**Func. diagram:** 6724
P-Group: Closed-loop control	**Units group:** -	**Unit selection:** -
Not for motor type: ASM, REL, FEM	**Scaling:** -	**Expert list:** 1
Min	**Max**	**Factory setting**
0.00	1000.00	0.00

Description: Sets the P gain of the field-weakening controller.

© Siemens AG 2012 All Rights Reserved

p1596[0...n] Field weakening controller integral-action time / Field_ctrl Tn

VECTOR_G (n/M)	**Can be changed:** U, T	**Calculated:** CALC_MOD_CON	**Access level:** 3
	Data type: FloatingPoint32	**Dynamic index:** DDS, p0180	**Func. diagram:** 6723, 6724
	P-Group: Closed-loop control	**Units group:** -	**Unit selection:** -
	Not for motor type: REL	**Scaling:** -	**Expert list:** 1
	Min	**Max**	**Factory setting**
	10 [ms]	10000 [ms]	50 [ms]

Description: Sets the integral-action time of the field-weakening controller.

r1597 CO: Field weakening controller output / Field_ctrl outp

VECTOR_G (n/M)	**Can be changed:** -	**Calculated:** -	**Access level:** 4
	Data type: FloatingPoint32	**Dynamic index:** -	**Func. diagram:** 6723
	P-Group: Closed-loop control	**Units group:** -	**Unit selection:** -
	Not for motor type: PEM, REL	**Scaling:** PERCENT	**Expert list:** 1
	Min	**Max**	**Factory setting**
	- [%]	- [%]	- [%]

Description: Displays the output of the field weakening controller.
The value is referred to the rated motor flux.

r1598 CO: Total flux setpoint / Flux setp total

VECTOR_G (n/M)	**Can be changed:** -	**Calculated:** -	**Access level:** 3
	Data type: FloatingPoint32	**Dynamic index:** -	**Func. diagram:** 6714, 6723, 6724, 6725, 6726, 8018
	P-Group: Closed-loop control	**Units group:** -	**Unit selection:** -
	Not for motor type: REL	**Scaling:** PERCENT	**Expert list:** 1
	Min	**Max**	**Factory setting**
	- [%]	- [%]	- [%]

Description: Displays the effective flux setpoint.
The value is referred to the rated motor flux.

p1599[0...n] Flux controller, excitation current difference / Flux ctr I_exc_dif

VECTOR_G (n/M)	**Can be changed:** U, T	**Calculated:** -	**Access level:** 3
	Data type: FloatingPoint32	**Dynamic index:** DDS, p0180	**Func. diagram:** -
	P-Group: Closed-loop control	**Units group:** -	**Unit selection:** -
	Not for motor type: ASM, PEM, REL	**Scaling:** -	**Expert list:** 1
	Min	**Max**	**Factory setting**
	0.0 [%]	100.0 [%]	3.0 [%]

Description: Sets the permissible difference between the actual excitation current and the excitation current setpoint.
The excitation current flux controller is active within this difference.
If the difference lies outside the specified limit value, then the I component of the excitation current flux controller is kept. Instead of this, for the flux controller of the field-generating current, an additional I controller is switched in (integral time according to p1592).
If the difference again lies within the bandwidth, the I component of the excitation current flux controller is re-activated and the I component of the flux controller of the field-generating current is reduced as an exponential function with respect to time. The reduction of the I component over time depends on the rotor time constant (r0384).

© Siemens AG 2012 All Rights Reserved

p1600[0...n] P flux controller, P gain / P flux ctrl Kp

VECTOR_G (n/M)	**Can be changed:** U, T	**Calculated:** CALC_MOD_CON	**Access level:** 3
	Data type: FloatingPoint32	**Dynamic index:** DDS, p0180	**Func. diagram:** -
	P-Group: Closed-loop control	**Units group:** -	**Unit selection:** -
	Not for motor type: ASM, PEM, REL	**Scaling:** -	**Expert list:** 1
	Min	**Max**	**Factory setting**
	0.0	999999.0	10.0

Description: Sets the proportional gain of the P flux controller for separately-excited synchronous motors (FEM).

Note: The value is automatically pre-assigned dependent on the motor when the drive system is first commissioned.
When calculating controller parameters (p0340 = 4), this value is re-calculated.

r1602 CO: P flux controller output / P flux ctrl outp

VECTOR_G (n/M)	**Can be changed:** -	**Calculated:** -	**Access level:** 4
	Data type: FloatingPoint32	**Dynamic index:** -	**Func. diagram:** 6726, 6727
	P-Group: Closed-loop control	**Units group:** 6_2	**Unit selection:** p0505
	Not for motor type: ASM, PEM, REL	**Scaling:** p2002	**Expert list:** 1
	Min	**Max**	**Factory setting**
	- [Arms]	- [Arms]	- [Arms]

Description: Displays the output of the P flux controller for separately-excited synchronous motors (FEM).

p1604[0...n] Pulse technique current limit / Pulse current lim

VECTOR_G (n/M)	**Can be changed:** U, T	**Calculated:** CALC_MOD_CON	**Access level:** 3
	Data type: FloatingPoint32	**Dynamic index:** DDS, p0180	**Func. diagram:** -
	P-Group: Closed-loop control	**Units group:** -	**Unit selection:** -
	Not for motor type: ASM, REL, FEM	**Scaling:** -	**Expert list:** 1
	Min	**Max**	**Factory setting**
	0.00 [Arms]	10000.00 [Arms]	0.00 [Arms]

Description: Sets the effective current limit within the pulse technique.

Note: The saturation characteristic of the motor defines the available operating range for the pulse technique.
This operating range can be adjusted using the current limit.
When commissioning a catalog motor, the technique is automatically selected depending on the motor type being used.
Otherwise, the rated motor current is used as pre-assigned value.

p1605[0...n] Pulse technique pattern configuration / Puls pattrn config

VECTOR_G (n/M)	**Can be changed:** U, T	**Calculated:** CALC_MOD_CON	**Access level:** 3
	Data type: Integer16	**Dynamic index:** DDS, p0180	**Func. diagram:** -
	P-Group: Closed-loop control	**Units group:** -	**Unit selection:** -
	Not for motor type: ASM, REL, FEM	**Scaling:** -	**Expert list:** 1
	Min	**Max**	**Factory setting**
	1	2	2

Description: Sets the applied pulse patterns for estimating the continuous rotor position.
Remark:
See p1750 for the activation of the pulse-pattern technique.

Value:
1: pm
2: ppmm

Dependency: Refer to: p1750

Note: When commissioning a catalog motor, the technique is automatically selected depending on the motor type being used.

© Siemens AG 2012 All Rights Reserved

r1606 CO: Pulse technique pattern actual / Puls pattern act

VECTOR_G (n/M)	**Can be changed:** -	**Calculated:** -	**Access level:** 3
	Data type: Integer16	**Dynamic index:** -	**Func. diagram:** -
	P-Group: Closed-loop control	**Units group:** -	**Unit selection:** -
	Not for motor type: ASM, REL, FEM	**Scaling:** -	**Expert list:** 1
	Min	**Max**	**Factory setting**
	0	2	-

Description: Displays the currently applied pulse patterns for estimating the continuous rotor position.

Value:
0: None
1: pm
2: ppmm

Dependency: Refer to: p1605, p1750

p1607[0...n] Pulse technique stimulus / Puls stimulus

VECTOR_G (n/M)	**Can be changed:** U, T	**Calculated:** CALC_MOD_CON	**Access level:** 3
	Data type: FloatingPoint32	**Dynamic index:** DDS, p0180	**Func. diagram:** -
	P-Group: Closed-loop control	**Units group:** -	**Unit selection:** -
	Not for motor type: ASM, REL, FEM	**Scaling:** -	**Expert list:** 1
	Min	**Max**	**Factory setting**
	0.000 [mVs]	20000.000 [mVs]	32.000 [mVs]

Description: Sets the excitation amplitude (voltage-time pulse) for the pulse technique for estimating the continuous rotor position.

Dependency: Refer to: p1605, p1750

r1608[0...6] CO: Pulse technique response / Puls response

VECTOR_G (n/M)	**Can be changed:** -	**Calculated:** -	**Access level:** 3
	Data type: FloatingPoint32	**Dynamic index:** -	**Func. diagram:** -
	P-Group: Displays, signals	**Units group:** 6_5	**Unit selection:** p0505
	Not for motor type: ASM, REL, FEM	**Scaling:** p2002	**Expert list:** 1
	Min	**Max**	**Factory setting**
	- [A]	- [A]	- [A]

Description: Displays the signal responses to the excitation of the pulse technique.

Index:
[0] = Phase R
[1] = Phase S
[2] = D estimated
[3] = Q estimated
[4] = D estimated AC
[5] = Q estimated AC
[6] = Pointer length AC

Dependency: Refer to: p1605, p1607, p1750

p1609[0...n] I/f operation current setpoint / I/f op I_setp

VECTOR_G (n/M)	**Can be changed:** U, T	**Calculated:** CALC_MOD_ALL	**Access level:** 3
	Data type: FloatingPoint32	**Dynamic index:** DDS, p0180	**Func. diagram:** 6727
	P-Group: Closed-loop control	**Units group:** 6_2	**Unit selection:** p0505
	Not for motor type: ASM, PEM, REL	**Scaling:** -	**Expert list:** 1
	Min	**Max**	**Factory setting**
	0.00 [Arms]	10000.00 [Arms]	0.00 [Arms]

Description: Sets the stator current setpoint for operation of a separately-excited synchronous motor (FEM) in operating mode I/f (p1300 = 18).

© Siemens AG 2012 All Rights Reserved

p1610[0...n] Torque setpoint static (SLVC) / M_set static

VECTOR_G (n/M)	**Can be changed:** U, T	**Calculated:** -	**Access level:** 2
	Data type: FloatingPoint32	**Dynamic index:** DDS, p0180	**Func. diagram:** 1710, 6721, 6722, 6726
	P-Group: Closed-loop control	**Units group:** -	**Unit selection:** -
	Not for motor type: REL	**Scaling:** -	**Expert list:** 1
	Min -200.0 [%]	**Max** 200.0 [%]	**Factory setting** 50.0 [%]

Description: Sets the static torque setpoint for sensorless vector control (SLVC).

This parameter is entered as a percentage referred to the rated motor torque (r0333).

For sensorless vector control, when the motor model is shut down, an absolute current is impressed. p1610 represents the maximum load that occurs at a constant setpoint speed.

Notice: p1610 should always be set to at least 10 % higher than the maximum steady-state load that can occur.

Note: For p1610 = 0%, a current setpoint is calculated that corresponds to the no-load case (ASM: rated magnetizing current).

For p1610 = 100 %, a current setpoint is calculated that corresponds to the rated motor torque.

Negative values are converted into positive setpoints in the case of induction and permanent-magnet synchronous motors.

p1611[0...n] Supplementary accelerating torque (SLVC) / M_suppl_accel

VECTOR_G (n/M)	**Can be changed:** U, T	**Calculated:** CALC_MOD_ALL	**Access level:** 2
	Data type: FloatingPoint32	**Dynamic index:** DDS, p0180	**Func. diagram:** 1710, 6721, 6722, 6726
	P-Group: Closed-loop control	**Units group:** -	**Unit selection:** -
	Not for motor type: REL	**Scaling:** -	**Expert list:** 1
	Min 0.0 [%]	**Max** 200.0 [%]	**Factory setting** 30.0 [%]

Description: Enters the dynamic torque setpoint for the low-speed range for sensorless vector control (SLVC). This parameter is entered as a percentage referred to the rated motor torque (r0333).

Note: When accelerating and braking p1611 is added to p1610 and the resulting total torque is converted into an appropriate current setpoint and controlled.

For pure accelerating torques, it is always favorable to use the torque pre-control of the speed controller (p1496).

p1612[0...n] Current setpoint magnetizing open-loop controlled / Id_set ctrl

VECTOR_G (n/M)	**Can be changed:** U, T	**Calculated:** CALC_MOD_ALL	**Access level:** 2
	Data type: FloatingPoint32	**Dynamic index:** DDS, p0180	**Func. diagram:** -
	P-Group: Closed-loop control	**Units group:** 6_2	**Unit selection:** p0505
	Not for motor type: ASM, PEM, REL	**Scaling:** -	**Expert list:** 1
	Min 0.00 [Arms]	**Max** 10000.00 [Arms]	**Factory setting** 0.00 [Arms]

Description: Sets the magnetizing current setpoint in the open-loop controlled encoderless operation.

The value is only valid during the current model orientation.

Dependency: Refer to: p1610, p1611

Note: The value is effective at speeds less than p1755 and represents a reserve for a possibly existing load torque or torque error in the moment of inertia.

© Siemens AG 2012 All Rights Reserved

r1614 EMF maximum / EMF max

VECTOR_G (n/M)	**Can be changed:** -	**Calculated:** -	**Access level:** 4
	Data type: FloatingPoint32	**Dynamic index:** -	**Func. diagram:** 6725
	P-Group: Displays, signals	**Units group:** 5_1	**Unit selection:** p0505
	Not for motor type: ASM, PEM, REL	**Scaling:** p2001	**Expert list:** 1
	Min - [Vrms]	**Max** - [Vrms]	**Factory setting** - [Vrms]

Description: Displays the actual maximum possible electromotive force (EMF) of the separately-excited synchronous motor.

Dependency: The value is the basis for the flux setpoint.
The maximum possible EMF depends on the following factors:
- Actual DC link voltage (r0070).
- Maximum modulation depth (p1803).
- Field-generating and torque-generating current setpoint.

p1616[0...n] Current setpoint smoothing time / I_set T_smooth

VECTOR_G (n/M)	**Can be changed:** U, T	**Calculated:** CALC_MOD_REG	**Access level:** 3
	Data type: FloatingPoint32	**Dynamic index:** DDS, p0180	**Func. diagram:** 6721, 6722, 6726
	P-Group: Closed-loop control	**Units group:** -	**Unit selection:** -
	Not for motor type: REL	**Scaling:** -	**Expert list:** 1
	Min 4 [ms]	**Max** 10000 [ms]	**Factory setting** 40 [ms]

Description: Sets the smoothing time for the current/torque setpoint in the open-loop-controlled operating range in the case of sensorless vector control.

Note: This parameter is only effective in the range where current is injected for sensorless vector control.
For induction motors, the current setpoint is calculated from p1610 and p1611 and for separately excited synchronous motors the torque setpoint is calculated from p1610 and p1611.

r1617 CO: Torque setpoint (controlled) / M_setp sv SLVC

VECTOR_G (n/M)	**Can be changed:** -	**Calculated:** -	**Access level:** 3
	Data type: FloatingPoint32	**Dynamic index:** -	**Func. diagram:** -
	P-Group: Closed-loop control	**Units group:** -	**Unit selection:** -
	Not for motor type: ASM, PEM, REL	**Scaling:** -	**Expert list:** 1
	Min - [Nm]	**Max** - [Nm]	**Factory setting** - [Nm]

Description: Torque setpoint for sensorless control of the separately excited synchronous motor in the open-loop-controlled operating range (under p1755 * p1756).

r1618 Current model controller, pre-control / I_mod_ctrl prectrl

VECTOR_G (n/M)	**Can be changed:** -	**Calculated:** -	**Access level:** 4
	Data type: FloatingPoint32	**Dynamic index:** -	**Func. diagram:** -
	P-Group: Closed-loop control	**Units group:** 6_2	**Unit selection:** p0505
	Not for motor type: ASM, PEM, REL	**Scaling:** p2002	**Expert list:** 1
	Min - [Arms]	**Max** - [Arms]	**Factory setting** - [Arms]

Description: Displays the pre-control value of the current model controller.
It involves a magnetizing current in the d-direction.

© Siemens AG 2012 All Rights Reserved

p1619[0...n] Setpoint/actual value tracking threshold / SetAct track thrsh

VECTOR_G (n/M)	**Can be changed:** U, T	**Calculated:** CALC_MOD_ALL	**Access level:** 3
	Data type: FloatingPoint32	**Dynamic index:** DDS, p0180	**Func. diagram:** 6727
	P-Group: Closed-loop control	**Units group:** 6_2	**Unit selection:** p0505
	Not for motor type: ASM, PEM, REL	**Scaling:** p2002	**Expert list:** 1
	Min	**Max**	**Factory setting**
	0.00 [Arms]	10000.00 [Arms]	0.00 [Arms]

Description: Threshold for setpoint/actual value tracking of the stator current in the q axis of the current model.

p1620[0...n] Stator current, minimum / I_stator min

VECTOR_G (n/M)	**Can be changed:** U, T	**Calculated:** CALC_MOD_ALL	**Access level:** 3
	Data type: FloatingPoint32	**Dynamic index:** DDS, p0180	**Func. diagram:** 6727
	P-Group: Closed-loop control	**Units group:** 6_2	**Unit selection:** p0505
	Not for motor type: ASM, PEM, REL	**Scaling:** -	**Expert list:** 1
	Min	**Max**	**Factory setting**
	-10000.00 [Arms]	10000.00 [Arms]	0.00 [Arms]

Description: Sets the minimum stator current for separately-excited synchronous motors (FEM).

A negative value means that the field-generating stator current (d-axis) has a negative sign. The valid value is internally limited to 50% of the rated motor current (p0305).

p1621[0...n] Changeover speed, inner cos phi = 1 / n_chngov cos phi=1

VECTOR_G (n/M)	**Can be changed:** U, T	**Calculated:** CALC_MOD_ALL	**Access level:** 3
	Data type: FloatingPoint32	**Dynamic index:** DDS, p0180	**Func. diagram:** 6727
	P-Group: Closed-loop control	**Units group:** 3_1	**Unit selection:** p0505
	Not for motor type: ASM, PEM, REL	**Scaling:** -	**Expert list:** 1
	Min	**Max**	**Factory setting**
	0.00 [rpm]	210000.00 [rpm]	0.00 [rpm]

Description: Sets the speed where a change is made from the inner to the outer cos phi = 1.

If the value that is entered exceeds the rated speed, then a change is made to the inner cos phi = 1 over the complete speed range.

p1622[0...n] Field-generating current setpoint smoothing time constant / Id_setp T_smth

VECTOR_G (n/M)	**Can be changed:** U, T	**Calculated:** -	**Access level:** 3
	Data type: FloatingPoint32	**Dynamic index:** DDS, p0180	**Func. diagram:** 6727
	P-Group: Closed-loop control	**Units group:** -	**Unit selection:** -
	Not for motor type: ASM, PEM, REL	**Scaling:** -	**Expert list:** 1
	Min	**Max**	**Factory setting**
	0.1 [ms]	200.0 [ms]	20.0 [ms]

Description: Sets the smoothing time constant for the setpoint of the field-generating current components.

The current filtered in this way is included in the calculation of the cos phi.

r1623[0...1] Field-generating current setpoint (steady-state) / Id_set stationary

VECTOR_G (n/M)	**Can be changed:** -	**Calculated:** -	**Access level:** 4
	Data type: FloatingPoint32	**Dynamic index:** -	**Func. diagram:** 6723, 6726, 6727
	P-Group: Displays, signals	**Units group:** 6_2	**Unit selection:** p0505
	Not for motor type: PEM, REL	**Scaling:** p2002	**Expert list:** 1
	Min	**Max**	**Factory setting**
	- [Arms]	- [Arms]	- [Arms]

Description: Displays the steady-state field generating current setpoint (Id_set).

© Siemens AG 2012 All Rights Reserved

Note: Re index 1:
Displays the stationary field-generating current on the stator side in the case of separately excited synchronous motors without the excitation current monitoring component (r1644).

r1624 Field-generating current setpoint, total / Id_setp total

VECTOR_G (n/M)

Can be changed: -	**Calculated:** -	**Access level:** 4
Data type: FloatingPoint32	**Dynamic index:** -	**Func. diagram:** 6640, 6721, 6723, 6727
P-Group: Displays, signals	**Units group:** 6_2	**Unit selection:** p0505
Not for motor type: REL	**Scaling:** p2002	**Expert list:** 1
Min - [Arms]	**Max** - [Arms]	**Factory setting** - [Arms]

Description: Displays the limited field-generating current setpoint (Id_set).
This value comprises the steady-state field-generating current setpoint r1623 and a dynamic component that is only set when changes are made to the flux setpoint.

p1625[0...n] Excitation current setpoint calibration / I_exc_setp cal

VECTOR_G (n/M)

Can be changed: U, T	**Calculated:** -	**Access level:** 3
Data type: FloatingPoint32	**Dynamic index:** DDS, p0180	**Func. diagram:** 6727
P-Group: Closed-loop control	**Units group:** -	**Unit selection:** -
Not for motor type: ASM, PEM, REL	**Scaling:** -	**Expert list:** 1
Min 10.0 [%]	**Max** 200.0 [%]	**Factory setting** 100.0 [%]

Description: Gain factor to weight the excitation current setpoint.

r1626 CO: Excitation current setpoint / I_exc_setp

VECTOR_G (n/M)

Can be changed: -	**Calculated:** -	**Access level:** 3
Data type: FloatingPoint32	**Dynamic index:** -	**Func. diagram:** 6727
P-Group: Closed-loop control	**Units group:** -	**Unit selection:** -
Not for motor type: ASM, PEM, REL	**Scaling:** PERCENT	**Expert list:** 1
Min - [%]	**Max** - [%]	**Factory setting** - [%]

Description: Displays the calculated excitation current setpoint.
Dependency: Refer to: p0390

r1627 CO: Current model load angle / I_mod load angle

VECTOR_G (n/M)

Can be changed: -	**Calculated:** -	**Access level:** 3
Data type: FloatingPoint32	**Dynamic index:** -	**Func. diagram:** 6727
P-Group: Closed-loop control	**Units group:** -	**Unit selection:** -
Not for motor type: ASM, PEM, REL	**Scaling:** p2005	**Expert list:** 1
Min - [°]	**Max** - [°]	**Factory setting** - [°]

Description: Displays the load angle of the current model.

p1628[0...n] Current model controller, dynamic factor / I_mod_ctr dyn_fact

VECTOR_G (n/M)

Can be changed: U, T	**Calculated:** CALC_MOD_CON	**Access level:** 3
Data type: FloatingPoint32	**Dynamic index:** DDS, p0180	**Func. diagram:** 6727
P-Group: Functions	**Units group:** -	**Unit selection:** -
Not for motor type: ASM, PEM, REL	**Scaling:** -	**Expert list:** 1
Min 1 [%]	**Max** 400 [%]	**Factory setting** 50 [%]

Description: Sets the dynamic response factor for the current model controller.

© Siemens AG 2012 All Rights Reserved

p1629[0...n] Current model controller P gain / I_mod_ctrl Kp

VECTOR_G (n/M)	**Can be changed:** U, T	**Calculated:** CALC_MOD_CON	**Access level:** 4
	Data type: FloatingPoint32	**Dynamic index:** DDS, p0180	**Func. diagram:** 6727
	P-Group: Closed-loop control	**Units group:** -	**Unit selection:** -
	Not for motor type: ASM, PEM, REL	**Scaling:** -	**Expert list:** 1
	Min	**Max**	**Factory setting**
	0.000	100000.000	0.000

Description: Sets the proportional gain for the current model controller.
This value is automatically pre-set using p3900 or p0340 when commissioning has been completed.

p1630[0...n] Current model controller integral time / I_mod_ctrl Tn

VECTOR_G (n/M)	**Can be changed:** U, T	**Calculated:** CALC_MOD_CON	**Access level:** 4
	Data type: FloatingPoint32	**Dynamic index:** DDS, p0180	**Func. diagram:** 6727
	P-Group: Closed-loop control	**Units group:** -	**Unit selection:** -
	Not for motor type: ASM, PEM, REL	**Scaling:** -	**Expert list:** 1
	Min	**Max**	**Factory setting**
	0.00 [ms]	10000.00 [ms]	0.00 [ms]

Description: Sets the integral time for the current model controller.
This value is automatically pre-set using p3900 or p0340 when commissioning has been completed.

r1631 Current model controller, P gain effective / I_mod ctrl Kp eff

VECTOR_G (n/M)	**Can be changed:** -	**Calculated:** -	**Access level:** 3
	Data type: FloatingPoint32	**Dynamic index:** -	**Func. diagram:** 6727
	P-Group: Closed-loop control	**Units group:** -	**Unit selection:** -
	Not for motor type: ASM, PEM, REL	**Scaling:** -	**Expert list:** 1
	Min	**Max**	**Factory setting**
	-	-	-

Description: Displays the effective P gain of the current model controller.

r1632 Current model controller integral time effective / I_mod_ctrl Tn eff

VECTOR_G (n/M)	**Can be changed:** -	**Calculated:** -	**Access level:** 3
	Data type: FloatingPoint32	**Dynamic index:** -	**Func. diagram:** 6727
	P-Group: Closed-loop control	**Units group:** -	**Unit selection:** -
	Not for motor type: ASM, PEM, REL	**Scaling:** -	**Expert list:** 1
	Min	**Max**	**Factory setting**
	- [ms]	- [ms]	- [ms]

Description: Displays the effective integral time of the current model controller.

r1633 Current model, flux setpoint / I_mod flux setp

VECTOR_G (n/M)	**Can be changed:** -	**Calculated:** -	**Access level:** 3
	Data type: FloatingPoint32	**Dynamic index:** -	**Func. diagram:** 6727
	P-Group: Closed-loop control	**Units group:** -	**Unit selection:** -
	Not for motor type: ASM, PEM, REL	**Scaling:** PERCENT	**Expert list:** 1
	Min	**Max**	**Factory setting**
	- [%]	- [%]	- [%]

Description: Displays the effective flux setpoint of the current model.
The value is referred to the rated motor flux.

© Siemens AG 2012 All Rights Reserved

r1634 Current model, flux actual value / I_mod flux act val

VECTOR_G (n/M)	**Can be changed:** -	**Calculated:** -	**Access level:** 3
	Data type: FloatingPoint32	**Dynamic index:** -	**Func. diagram:** 6727
	P-Group: Closed-loop control	**Units group:** -	**Unit selection:** -
	Not for motor type: ASM, PEM, REL	**Scaling:** PERCENT	**Expert list:** 1
	Min - [%]	**Max** - [%]	**Factory setting** - [%]

Description: Displays the effective flux actual value of the current model.
The value is referred to the rated motor flux.

r1635 Current model controller, I component / I_mod_ctrl I comp

VECTOR_G (n/M)	**Can be changed:** -	**Calculated:** -	**Access level:** 4
	Data type: FloatingPoint32	**Dynamic index:** -	**Func. diagram:** 6727
	P-Group: Closed-loop control	**Units group:** 6_2	**Unit selection:** p0505
	Not for motor type: ASM, PEM, REL	**Scaling:** p2002	**Expert list:** 1
	Min - [Arms]	**Max** - [Arms]	**Factory setting** - [Arms]

Description: Displays the I component of the current model controller.

r1636 Current model controller output / I_mod_ctrl outp

VECTOR_G (n/M)	**Can be changed:** -	**Calculated:** -	**Access level:** 4
	Data type: FloatingPoint32	**Dynamic index:** -	**Func. diagram:** 6727
	P-Group: Closed-loop control	**Units group:** 6_2	**Unit selection:** p0505
	Not for motor type: ASM, PEM, REL	**Scaling:** p2002	**Expert list:** 1
	Min - [Arms]	**Max** - [Arms]	**Factory setting** - [Arms]

Description: Displays the output of the current model controller.

r1637 Current model, magnetizing current, d axis / I_mod I_mag d-ax

VECTOR_G (n/M)	**Can be changed:** -	**Calculated:** -	**Access level:** 4
	Data type: FloatingPoint32	**Dynamic index:** -	**Func. diagram:** 6727
	P-Group: Closed-loop control	**Units group:** 6_2	**Unit selection:** p0505
	Not for motor type: ASM, PEM, REL	**Scaling:** p2002	**Expert list:** 1
	Min - [Arms]	**Max** - [Arms]	**Factory setting** - [Arms]

Description: Displays the magnetizing current of the current model in the d-axis.

r1638 Current model, magnetizing current, q axis / I_mod I_mag q-ax

VECTOR_G (n/M)	**Can be changed:** -	**Calculated:** -	**Access level:** 4
	Data type: FloatingPoint32	**Dynamic index:** -	**Func. diagram:** 6727
	P-Group: Closed-loop control	**Units group:** 6_2	**Unit selection:** p0505
	Not for motor type: ASM, PEM, REL	**Scaling:** p2002	**Expert list:** 1
	Min - [Arms]	**Max** - [Arms]	**Factory setting** - [Arms]

Description: Displays the magnetizing current of the current model in the q-axis.

© Siemens AG 2012 All Rights Reserved

r1639 CO: Current model Isq after actual value tracking / I_mod Isq track

VECTOR_G (n/M)	**Can be changed:** -	**Calculated:** -	**Access level:** 4
	Data type: FloatingPoint32	**Dynamic index:** -	**Func. diagram:** 6727
	P-Group: Closed-loop control	**Units group:** 6_2	**Unit selection:** p0505
	Not for motor type: ASM, PEM, REL	**Scaling:** p2002	**Expert list:** 1
	Min	**Max**	**Factory setting**
	- [Arms]	- [Arms]	- [Arms]

Description: Displays the stator current in the q axis after current actual value tracking.

p1640[0...n] CI: Excitation current actual value signal source / I_exc_ActVal S_src

VECTOR_G (n/M)	**Can be changed:** T	**Calculated:** -	**Access level:** 3
	Data type: Unsigned32 / FloatingPoint32	**Dynamic index:** CDS, p0170	**Func. diagram:** 6727
	P-Group: Closed-loop control	**Units group:** -	**Unit selection:** -
	Not for motor type: ASM, PEM, REL	**Scaling:** PERCENT	**Expert list:** 1
	Min	**Max**	**Factory setting**
	-	-	0

Description: Sets the signal source for the excitation current actual value

r1641 Excitation current actual value / I_exc_act val

VECTOR_G (n/M)	**Can be changed:** -	**Calculated:** -	**Access level:** 3
	Data type: FloatingPoint32	**Dynamic index:** -	**Func. diagram:** 6727, 8018
	P-Group: Closed-loop control	**Units group:** -	**Unit selection:** -
	Not for motor type: ASM, PEM, REL	**Scaling:** PERCENT	**Expert list:** 1
	Min	**Max**	**Factory setting**
	- [%]	- [%]	- [%]

Description: Displays the excitation current actual value that is read in.

Dependency: Refer to: p0390

p1642[0...n] Minimum excitation current / Min I_exc

VECTOR_G (n/M)	**Can be changed:** U, T	**Calculated:** -	**Access level:** 4
	Data type: FloatingPoint32	**Dynamic index:** DDS, p0180	**Func. diagram:** 6727
	P-Group: Closed-loop control	**Units group:** -	**Unit selection:** -
	Not for motor type: ASM, PEM, REL	**Scaling:** -	**Expert list:** 1
	Min	**Max**	**Factory setting**
	0.1 [%]	50.0 [%]	5.0 [%]

Description: Sets the minimum excitation current.
This means that negative excitation currents can be avoided.

p1643[0...n] Gain factor, minimum excitation current closed-loop control / Min I_exc Kp

VECTOR_G (n/M)	**Can be changed:** U, T	**Calculated:** CALC_MOD_CON	**Access level:** 4
	Data type: FloatingPoint32	**Dynamic index:** DDS, p0180	**Func. diagram:** 6727
	P-Group: Closed-loop control	**Units group:** -	**Unit selection:** -
	Not for motor type: ASM, PEM, REL	**Scaling:** -	**Expert list:** 1
	Min	**Max**	**Factory setting**
	0.00	5.00	0.40

Description: Sets the gain factor for the minimum excitation current, closed-loop control.
This is active if the excitation current is below 75 % of p1642.

Dependency: Refer to: p1642

© Siemens AG 2012 All Rights Reserved

r1644 CO: Excitation current monitoring output / I_exc_monit outp

VECTOR_G (n/M)	**Can be changed:** -	**Calculated:** -	**Access level:** 4
	Data type: FloatingPoint32	**Dynamic index:** -	**Func. diagram:** 6727
	P-Group: Closed-loop control	**Units group:** 6_2	**Unit selection:** p0505
	Not for motor type: ASM, PEM, REL	**Scaling:** p2002	**Expert list:** 1
	Min	**Max**	**Factory setting**
	- [Arms]	- [Arms]	- [Arms]

Description: Displays the output of the excitation current monitoring for separately excited synchronous motors.

p1645[0...6] BI: Excitation feedback signals signal source / Exc FS S_src

VECTOR_G (n/M)	**Can be changed:** T	**Calculated:** -	**Access level:** 3
	Data type: Unsigned32 / Binary	**Dynamic index:** -	**Func. diagram:** 6495
	P-Group: Commands	**Units group:** -	**Unit selection:** -
	Not for motor type: ASM, PEM, REL	**Scaling:** -	**Expert list:** 1
	Min	**Max**	**Factory setting**
	-	-	1

Description: Sets the signal source for the individual feedback signals from the excitation.

Index:
[0] = Excitation ready to be powered up
[1] = Excitation ready
[2] = Excitation operational
[3] = Excitation group signal fault
[4] = Excitation group signal alarm
[5] = Not used
[6] = Not used

Dependency: Refer to: r1649

p1646 Excitation monitoring time / Excit t_monit

VECTOR_G (n/M)	**Can be changed:** T	**Calculated:** -	**Access level:** 2
	Data type: FloatingPoint32	**Dynamic index:** -	**Func. diagram:** 6495
	P-Group: Commands	**Units group:** -	**Unit selection:** -
	Not for motor type: ASM, PEM, REL	**Scaling:** -	**Expert list:** 1
	Min	**Max**	**Factory setting**
	2.0 [s]	1300.0 [s]	20.0 [s]

Description: Sets the monitoring time of the excitation.

After an ON command, the feedback signal must be received within this monitoring time.

Note: After the on command for the excitation (r1648.0 = 1), its feedback signal must be available at r1649.1 within this monitoring time (BI: p1645[1]).

The same monitoring time is effective after the excitation is enabled for operation (r1648.3 = 1) up to the feedback signal "excitation operational" (r1649.2 = 1, BI: p1645[2]).

p1647 Excitation switch-off delay time / Exc t_off

VECTOR_G (n/M)	**Can be changed:** T	**Calculated:** -	**Access level:** 2
	Data type: FloatingPoint32	**Dynamic index:** -	**Func. diagram:** 6495
	P-Group: Commands	**Units group:** -	**Unit selection:** -
	Not for motor type: ASM, PEM, REL	**Scaling:** -	**Expert list:** 1
	Min	**Max**	**Factory setting**
	0.0 [s]	5.0 [s]	0.8 [s]

Description: Sets the switch-off delay time to shut down the excitation equipment.

Note: The delay time starts if, when powering down, r0863.0 = 0.

r1648.0 and r1648.3 are reset at the end of the delay time.

© Siemens AG 2012 All Rights Reserved

r1648.0...11 CO/BO: Excitation, control word / Excitation STW

VECTOR_G (n/M)

Can be changed: -	**Calculated:** -	**Access level:** 2
Data type: Unsigned16	**Dynamic index:** -	**Func. diagram:** 6495
P-Group: Displays, signals	**Units group:** -	**Unit selection:** -
Not for motor type: ASM, PEM, REL	**Scaling:** -	**Expert list:** 1
Min	**Max**	**Factory setting**
-	-	-

Description: Displays the control word for the excitation equipment.

Bit field:

Bit	Signal name	1 signal	0 signal	FP
00	Power up excitation	Yes	No	-
01	Excitation no OFF2	Yes	No	-
02	Excitation no OFF3	Yes	No	-
03	Excitation operation enable	Yes	No	-
07	Excitation acknowledge fault	Yes	No	-
10	Master control by excitation equipment	Yes	No	-
11	ccw rotating field excitation invert excitation current setpoint	Yes	No	-

r1649.0...7 CO/BO: Excitation status word / Excitation ZSW

VECTOR_G (n/M)

Can be changed: -	**Calculated:** -	**Access level:** 2
Data type: Unsigned16	**Dynamic index:** -	**Func. diagram:** 6495
P-Group: Displays, signals	**Units group:** -	**Unit selection:** -
Not for motor type: ASM, PEM, REL	**Scaling:** -	**Expert list:** 1
Min	**Max**	**Factory setting**
-	-	-

Description: Displays the status word of the excitation equipment.

Bit field:

Bit	Signal name	1 signal	0 signal	FP
00	Excitation ready to be powered up feedback signal	Yes	No	-
01	Excitation ready feedback signal	Yes	No	-
02	Excitation operational feedback signal	Yes	No	-
03	Excitation group signal fault	Yes	No	-
07	Excitation group signal alarm	Yes	No	-

Dependency: Refer to: p1645

r1650 Current setpoint torque-generating before filter / Iq_set before filt

VECTOR_G (n/M)

Can be changed: -	**Calculated:** -	**Access level:** 3
Data type: FloatingPoint32	**Dynamic index:** -	**Func. diagram:** 5710
P-Group: Closed-loop control	**Units group:** 6_2	**Unit selection:** p0505
Not for motor type: REL	**Scaling:** p2002	**Expert list:** 1
Min	**Max**	**Factory setting**
- [Arms]	- [Arms]	- [Arms]

Description: Displays the torque generating current setpoint Iqset after the torque limits and the clock cycle interpolation is ahead of the current setpoint filters.

r1651 CO: Torque setpoint, function generator / M_set FG

VECTOR_G (n/M)

Can be changed: -	**Calculated:** -	**Access level:** 3
Data type: FloatingPoint32	**Dynamic index:** -	**Func. diagram:** -
P-Group: Closed-loop control	**Units group:** 7_1	**Unit selection:** p0505
Not for motor type: REL	**Scaling:** p2003	**Expert list:** 1
Min	**Max**	**Factory setting**
- [Nm]	- [Nm]	- [Nm]

Description: Displays the torque setpoint of the function generator.

© Siemens AG 2012 All Rights Reserved

p1653[0...n] Current setpoint torque-generating smoothing time minimum / Isq_s T_smth min

VECTOR_G (n/M)

Can be changed: U, T	**Calculated:** -	**Access level:** 4
Data type: FloatingPoint32	**Dynamic index:** DDS, p0180	**Func. diagram:** 6710
P-Group: Closed-loop control	**Units group:** -	**Unit selection:** -
Not for motor type: PEM, REL	**Scaling:** -	**Expert list:** 1
Min	**Max**	**Factory setting**
0.1 [ms]	20.0 [ms]	0.1 [ms]

Description: Sets the minimum smoothing time constant for the setpoint of the torque-generating current components.

p1654[0...n] Curr. setpoint torque-gen. smoothing time field weakening range / Isq_s T_smth FW

VECTOR_G (n/M)

Can be changed: U, T	**Calculated:** CALC_MOD_ALL	**Access level:** 4
Data type: FloatingPoint32	**Dynamic index:** DDS, p0180	**Func. diagram:** 6710
P-Group: Closed-loop control	**Units group:** -	**Unit selection:** -
Not for motor type: PEM, REL	**Scaling:** -	**Expert list:** 1
Min	**Max**	**Factory setting**
0.1 [ms]	50.0 [ms]	4.8 [ms]

Description: Sets the smoothing time constant for the setpoint of the torque-generating current components.

Note: The smoothing time does not become effective until the field-weakening range is reached.

p1655[0...4] CI: Current setpoint/Speed actual value filter nat. frequency tuning / I/n_setp_filt f_n

VECTOR_G (n/M)

Can be changed: U, T	**Calculated:** -	**Access level:** 3
Data type: Unsigned32 / FloatingPoint32	**Dynamic index:** -	**Func. diagram:** 1710, 6710
P-Group: Closed-loop control	**Units group:** -	**Unit selection:** -
Not for motor type: REL	**Scaling:** PERCENT	**Expert list:** 1
Min	**Max**	**Factory setting**
-	-	1

Description: Sets the signal source for tuning the natural frequency of the current setpoint filter 1, 2 and speed actual value filter 5.

Index:
[0] = Filter 1
[1] = Filter 2
[2] = Reserved
[3] = Reserved
[4] = Filter 5

p1656[0...n] Current setpoint/Speed actual value filter activation / I_setp_filt act

VECTOR_G (n/M)

Can be changed: U, T	**Calculated:** -	**Access level:** 3
Data type: Unsigned16	**Dynamic index:** DDS, p0180	**Func. diagram:** 4715, 6710
P-Group: Closed-loop control	**Units group:** -	**Unit selection:** -
Not for motor type: REL	**Scaling:** -	**Expert list:** 1
Min	**Max**	**Factory setting**
-	-	0000 0001 bin

Description: Setting for activating/de-activating the current setpoint filter 1, 2 and speed actual value filter 5.

Bit field:

Bit	Signal name	1 signal	0 signal	FP
00	Filter 1	Active	Inactive	-
01	Filter 2	Active	Inactive	-
04	Filter 5	Active	Inactive	-

Dependency: The individual current setpoint/speed actual value filters are parameterized starting at p1657.

Note: If not all of the filters are required, then the filters should be used consecutively starting from filter 1.

© Siemens AG 2012 All Rights Reserved

p1657[0...n] Current setpoint filter 1 type / I_set_filt 1 Typ

VECTOR_G (n/M)	**Can be changed:** U, T	**Calculated:** CALC_MOD_CON	**Access level:** 3
	Data type: Integer16	**Dynamic index:** DDS, p0180	**Func. diagram:** 5710, 6710
	P-Group: Closed-loop control	**Units group:** -	**Unit selection:** -
	Not for motor type: REL	**Scaling:** -	**Expert list:** 1
	Min	**Max**	**Factory setting**
	1	2	1

Description: Sets the current setpoint filter 1 as low pass (PT2) or as extended general 2nd-order filter.

Value:
1: Low pass: PT2
2: General 2nd-order filter

Dependency: Current setpoint filter 1 is activated via p1656.0 and parameterized via p1657 ... p1661.

Note: For an extended general 2nd-order filter, by inserting the same natural frequency in both the numerator and in the denominator, i.e. bandstop frequency, a bandstop filter is implemented. If the numerator damping of zero is selected, the bandstop frequency is completely suppressed.

The denominator damping can be determined from the equation for the 3 dB bandwidth:

f_3dB bandwidth = 2 * D_denominator * f_bandstop frequency

p1658[0...n] Current setpoint filter 1 denominator natural frequency / I_set_filt 1 fn_n

VECTOR_G (n/M)	**Can be changed:** U, T	**Calculated:** CALC_MOD_CON	**Access level:** 3
	Data type: FloatingPoint32	**Dynamic index:** DDS, p0180	**Func. diagram:** 5710, 6710
	P-Group: Closed-loop control	**Units group:** -	**Unit selection:** -
	Not for motor type: REL	**Scaling:** -	**Expert list:** 1
	Min	**Max**	**Factory setting**
	0.5 [Hz]	16000.0 [Hz]	1999.0 [Hz]

Description: Sets the denominator natural frequency for current setpoint filter 1 (PT2, general filter).

Dependency: Current setpoint filter 1 is activated via p1656.0 and parameterized via p1657 ... p1661.

p1659[0...n] Current setpoint filter 1 denominator damping / I_set_filt 1 D_n

VECTOR_G (n/M)	**Can be changed:** U, T	**Calculated:** CALC_MOD_CON	**Access level:** 3
	Data type: FloatingPoint32	**Dynamic index:** DDS, p0180	**Func. diagram:** 5710, 6710
	P-Group: Closed-loop control	**Units group:** -	**Unit selection:** -
	Not for motor type: REL	**Scaling:** -	**Expert list:** 1
	Min	**Max**	**Factory setting**
	0.001	10.000	0.700

Description: Sets the denominator damping for current setpoint filter 1.

Dependency: Current setpoint filter 1 is activated via p1656.0 and parameterized via p1657 ... p1661.

p1660[0...n] Current setpoint filter 1 numerator natural frequency / I_set_filt 1 fn_z

VECTOR_G (n/M)	**Can be changed:** U, T	**Calculated:** -	**Access level:** 3
	Data type: FloatingPoint32	**Dynamic index:** DDS, p0180	**Func. diagram:** 5710, 6710
	P-Group: Closed-loop control	**Units group:** -	**Unit selection:** -
	Not for motor type: REL	**Scaling:** -	**Expert list:** 1
	Min	**Max**	**Factory setting**
	0.5 [Hz]	16000.0 [Hz]	1999.0 [Hz]

Description: Sets the numerator natural frequency for current setpoint filter 1 (general filter).

Dependency: Current setpoint filter 1 is activated via p1656.0 and parameterized via p1657 ... p1661.

© Siemens AG 2012 All Rights Reserved

p1661[0...n] Current setpoint filter 1 numerator damping / I_set_filt 1 D_z

VECTOR_G (n/M)	**Can be changed:** U, T	**Calculated:** -	**Access level:** 3
	Data type: FloatingPoint32	**Dynamic index:** DDS, p0180	**Func. diagram:** 5710, 6710
	P-Group: Closed-loop control	**Units group:** -	**Unit selection:** -
	Not for motor type: REL	**Scaling:** -	**Expert list:** 1
	Min	**Max**	**Factory setting**
	0.000	10.000	0.700

Description: Sets the numerator damping for current setpoint filter 1.

Dependency: Current setpoint filter 1 is activated via p1656.0 and parameterized via p1657 ... p1661.

p1662[0...n] Current setpoint filter 2 type / I_set_filt 2 Typ

VECTOR_G (n/M)	**Can be changed:** U, T	**Calculated:** -	**Access level:** 3
	Data type: Integer16	**Dynamic index:** DDS, p0180	**Func. diagram:** 5710, 6710
	P-Group: Closed-loop control	**Units group:** -	**Unit selection:** -
	Not for motor type: REL	**Scaling:** -	**Expert list:** 1
	Min	**Max**	**Factory setting**
	1	2	1

Description: Sets the current setpoint filter 2 as low pass (PT2) or as extended general 2nd-order filter.

Value:
1: Low pass: PT2
2: General 2nd-order filter

Dependency: Current setpoint filter 2 is activated via p1656.1 and parameterized via p1662 ... p1666.

Note: For an extended general 2nd-order filter, by inserting the same natural frequency in both the numerator and in the denominator, i.e. bandstop frequency, a bandstop filter is implemented. If the numerator damping of zero is selected, the bandstop frequency is completely suppressed.

The denominator damping can be determined from the equation for the 3 dB bandwidth:

f_3dB bandwidth = 2 * D_denominator * f_bandstop frequency

p1663[0...n] Current setpoint filter 2 denominator natural frequency / I_set_filt 2 fn_n

VECTOR_G (n/M)	**Can be changed:** U, T	**Calculated:** -	**Access level:** 3
	Data type: FloatingPoint32	**Dynamic index:** DDS, p0180	**Func. diagram:** 5710, 6710
	P-Group: Closed-loop control	**Units group:** -	**Unit selection:** -
	Not for motor type: REL	**Scaling:** -	**Expert list:** 1
	Min	**Max**	**Factory setting**
	0.5 [Hz]	16000.0 [Hz]	1999.0 [Hz]

Description: Sets the denominator natural frequency for current setpoint filter 2 (PT2, general filter).

Dependency: Current setpoint filter 2 is activated via p1656.1 and parameterized via p1662 ... p1666.

p1664[0...n] Current setpoint filter 2 denominator damping / I_set_filt 2 D_n

VECTOR_G (n/M)	**Can be changed:** U, T	**Calculated:** -	**Access level:** 3
	Data type: FloatingPoint32	**Dynamic index:** DDS, p0180	**Func. diagram:** 5710, 6710
	P-Group: Closed-loop control	**Units group:** -	**Unit selection:** -
	Not for motor type: REL	**Scaling:** -	**Expert list:** 1
	Min	**Max**	**Factory setting**
	0.001	10.000	0.700

Description: Sets the denominator damping for current setpoint filter 2.

Dependency: Current setpoint filter 2 is activated via p1656.1 and parameterized via p1662 ... p1666.

© Siemens AG 2012 All Rights Reserved

p1665[0...n] Current setpoint filter 2 numerator natural frequency / I_set_filt 2 fn_z

VECTOR_G (n/M)	**Can be changed:** U, T	**Calculated:** -	**Access level:** 3
	Data type: FloatingPoint32	**Dynamic index:** DDS, p0180	**Func. diagram:** 5710, 6710
	P-Group: Closed-loop control	**Units group:** -	**Unit selection:** -
	Not for motor type: REL	**Scaling:** -	**Expert list:** 1
	Min	**Max**	**Factory setting**
	0.5 [Hz]	16000.0 [Hz]	1999.0 [Hz]

Description: Sets the numerator natural frequency for current setpoint filter 2 (general filter).

Dependency: Current setpoint filter 2 is activated via p1656.1 and parameterized via p1662 ... p1666.

p1666[0...n] Current setpoint filter 2 numerator damping / I_set_filt 2 D_z

VECTOR_G (n/M)	**Can be changed:** U, T	**Calculated:** -	**Access level:** 3
	Data type: FloatingPoint32	**Dynamic index:** DDS, p0180	**Func. diagram:** 5710, 6710
	P-Group: Closed-loop control	**Units group:** -	**Unit selection:** -
	Not for motor type: REL	**Scaling:** -	**Expert list:** 1
	Min	**Max**	**Factory setting**
	0.000	10.000	0.700

Description: Sets the numerator damping for current setpoint filter 2.

Dependency: Current setpoint filter 2 is activated via p1656.1 and parameterized via p1662 ... p1666.

p1677[0...n] Speed actual value filter 5 type / n_act_filt 5 type

VECTOR_G (n/M)	**Can be changed:** U, T	**Calculated:** CALC_MOD_CON	**Access level:** 3
	Data type: Integer16	**Dynamic index:** DDS, p0180	**Func. diagram:** 4715
	P-Group: Closed-loop control	**Units group:** -	**Unit selection:** -
	Not for motor type: REL	**Scaling:** -	**Expert list:** 1
	Min	**Max**	**Factory setting**
	1	2	2

Description: Sets speed actual value filter 5 as low pass (PT2) or as extended general 2nd order filter.

Value:
1: Low pass: PT2
2: General 2nd-order filter

Dependency: The speed actual value filter is activated with p1656.4 and parameterized with p1677 ... p1681.

Note: For an extended general 2nd-order filter, by inserting the same natural frequency in both the numerator and in the denominator, i.e. bandstop frequency, a bandstop filter is implemented. If the numerator damping of zero is selected, the bandstop frequency is completely suppressed.

The denominator damping can be determined from the equation for the 3 dB bandwidth:

f_3dB bandwidth = 2 * D_denominator * f_bandstop frequency

p1678[0...n] Speed actual value filter 5 denominator natural frequency / n_act_filt 5 fn_d

VECTOR_G (n/M)	**Can be changed:** U, T	**Calculated:** CALC_MOD_CON	**Access level:** 3
	Data type: FloatingPoint32	**Dynamic index:** DDS, p0180	**Func. diagram:** 4715
	P-Group: Closed-loop control	**Units group:** -	**Unit selection:** -
	Not for motor type: REL	**Scaling:** -	**Expert list:** 1
	Min	**Max**	**Factory setting**
	0.5 [Hz]	16000.0 [Hz]	1999.0 [Hz]

Description: Sets the denominator natural frequency for speed actual value filter 5 (PT2, general filter).

Dependency: The speed actual value filter is activated with p1656.4 and parameterized with p1677 ... p1681.

© Siemens AG 2012 All Rights Reserved

p1679[0...n] Speed actual value filter 5 denominator damping / n_act_filt 5 D_d

VECTOR_G (n/M)	**Can be changed:** U, T	**Calculated:** CALC_MOD_CON	**Access level:** 3
	Data type: FloatingPoint32	**Dynamic index:** DDS, p0180	**Func. diagram:** 4715
	P-Group: Closed-loop control	**Units group:** -	**Unit selection:** -
	Not for motor type: REL	**Scaling:** -	**Expert list:** 1
	Min	**Max**	**Factory setting**
	0.001	10.000	0.700

Description: Sets the denominator damping for speed actual value filter 5.

Dependency: The speed actual value filter is activated with p1656.4 and parameterized with p1677 ... p1681.

p1680[0...n] Speed actual value filter 5 numerator natural frequency / n_act_filt 5 fn_n

VECTOR_G (n/M)	**Can be changed:** U, T	**Calculated:** -	**Access level:** 3
	Data type: FloatingPoint32	**Dynamic index:** DDS, p0180	**Func. diagram:** 4715
	P-Group: Closed-loop control	**Units group:** -	**Unit selection:** -
	Not for motor type: REL	**Scaling:** -	**Expert list:** 1
	Min	**Max**	**Factory setting**
	0.5 [Hz]	16000.0 [Hz]	1999.0 [Hz]

Description: Sets the numerator natural frequency for speed actual value filter 5 (general filter).

Dependency: The speed actual value filter is activated with p1656.4 and parameterized with p1677 ... p1681.

p1681[0...n] Speed actual value filter 5 numerator damping / n_act_filt 5 D_n

VECTOR_G (n/M)	**Can be changed:** U, T	**Calculated:** -	**Access level:** 3
	Data type: FloatingPoint32	**Dynamic index:** DDS, p0180	**Func. diagram:** 4715
	P-Group: Closed-loop control	**Units group:** -	**Unit selection:** -
	Not for motor type: REL	**Scaling:** -	**Expert list:** 1
	Min	**Max**	**Factory setting**
	0.000	10.000	0.700

Description: Sets the numerator damping for speed actual value filter 5.

Dependency: The speed actual value filter is activated with p1656.4 and parameterized with p1677 ... p1681.

p1699 Filter data acceptance / Filt data accept

VECTOR_G (n/M)	**Can be changed:** U, T	**Calculated:** -	**Access level:** 3
	Data type: Integer16	**Dynamic index:** -	**Func. diagram:** -
	P-Group: Closed-loop control	**Units group:** -	**Unit selection:** -
	Not for motor type: REL	**Scaling:** -	**Expert list:** 1
	Min	**Max**	**Factory setting**
	0	1	0

Description: Activates data acceptance for parameter changes for the filter.

p1699 = 0:

The new filter data are immediately accepted.

p1699 = 1:

The new filter data are only accepted when this parameter is reset.

Dependency: Refer to: p1416, p1656, p1657, p1658, p1659, p1660, p1661, p1662, p1663, p1664, p1665, p1666

© Siemens AG 2012 All Rights Reserved

p1702[0...n] Isd current controller pre-control scaling / Isd_ctr_prectrScal

VECTOR_G (n/M)	**Can be changed:** U, T	**Calculated:** -	**Access level:** 4
	Data type: FloatingPoint32	**Dynamic index:** DDS, p0180	**Func. diagram:** 6714
	P-Group: Closed-loop control	**Units group:** -	**Unit selection:** -
	Not for motor type: ASM, REL	**Scaling:** -	**Expert list:** 1
	Min	**Max**	**Factory setting**
	0.0 [%]	200.0 [%]	70.0 [%]

Description: Sets the scaling of the dynamic current controller pre-control for the flux-generating current component Isd.

Note: The parameter is effective for permanent and separately-excited synchronous motors.

p1703[0...n] Isq current controller pre-control scaling / Isq_ctr_prectrScal

VECTOR_G (n/M)	**Can be changed:** U, T	**Calculated:** CALC_MOD_CON	**Access level:** 4
	Data type: FloatingPoint32	**Dynamic index:** DDS, p0180	**Func. diagram:** 6714
	P-Group: Closed-loop control	**Units group:** -	**Unit selection:** -
	Not for motor type: REL	**Scaling:** -	**Expert list:** 1
	Min	**Max**	**Factory setting**
	0.0 [%]	200.0 [%]	70.0 [%]

Description: Sets the scaling of the dynamic current controller pre-control for the torque/force-generating current component Isq.

p1704[0...n] Isq current controller pre-control EMF scaling / Isq_ctrl EMF scal

VECTOR_G (n/M)	**Can be changed:** U, T	**Calculated:** -	**Access level:** 4
	Data type: FloatingPoint32	**Dynamic index:** DDS, p0180	**Func. diagram:** 6714, 6726
	P-Group: Closed-loop control	**Units group:** -	**Unit selection:** -
	Not for motor type: ASM, PEM, REL	**Scaling:** -	**Expert list:** 1
	Min	**Max**	**Factory setting**
	0.0 [%]	200.0 [%]	100.0 [%]

Description: Sets the scaling of the EMF pre-control for the Isq current controller.

p1705[0...n] Flux setpoint/actual value tracking threshold / Flux track thresh

VECTOR_G (n/M)	**Can be changed:** U, T	**Calculated:** -	**Access level:** 4
	Data type: FloatingPoint32	**Dynamic index:** DDS, p0180	**Func. diagram:** 6714, 6726
	P-Group: Closed-loop control	**Units group:** -	**Unit selection:** -
	Not for motor type: ASM, PEM, REL	**Scaling:** PERCENT	**Expert list:** 1
	Min	**Max**	**Factory setting**
	0.0 [%]	100.0 [%]	100.0 [%]

Description: Threshold for the setpoint - actual value tracking of the EMF pre-control of the Isq current controller.

p1715[0...n] Current controller P gain / I_ctrl Kp

VECTOR_G (n/M)	**Can be changed:** U, T	**Calculated:** CALC_MOD_CON	**Access level:** 3
	Data type: FloatingPoint32	**Dynamic index:** DDS, p0180	**Func. diagram:** 1710, 6714, 7017
	P-Group: Closed-loop control	**Units group:** -	**Unit selection:** -
	Not for motor type: REL	**Scaling:** -	**Expert list:** 1
	Min	**Max**	**Factory setting**
	0.000	100000.000	0.000

Description: Sets the proportional gain of the current controller for the lower adaptation current range.
This value is automatically pre-set using p3900 or p0340 when commissioning has been completed.

Dependency: Refer to: p0391, p0392, p0393

Note: For p0393 = 100 %, the current controller adaptation is disabled and p1715 is effective over the entire range.

© Siemens AG 2012 All Rights Reserved

p1717[0...n] Current controller integral-action time / I_ctrl Tn

VECTOR_G (n/M)	**Can be changed:** U, T	**Calculated:** CALC_MOD_CON	**Access level:** 3
	Data type: FloatingPoint32	**Dynamic index:** DDS, p0180	**Func. diagram:** 1710, 5714, 6714, 7017
	P-Group: Closed-loop control	**Units group:** -	**Unit selection:** -
	Not for motor type: REL	**Scaling:** -	**Expert list:** 1
	Min 0.00 [ms]	**Max** 1000.00 [ms]	**Factory setting** 2.00 [ms]

Description: Sets the integral-action time of the current controller.

Dependency: Refer to: p1715

r1718 CO: Isq controller output / Isq_ctrl outp

VECTOR_G (n/M)	**Can be changed:** -	**Calculated:** -	**Access level:** 4
	Data type: FloatingPoint32	**Dynamic index:** -	**Func. diagram:** 6714
	P-Group: Closed-loop control	**Units group:** 5_1	**Unit selection:** p0505
	Not for motor type: REL	**Scaling:** p2001	**Expert list:** 1
	Min - [Vrms]	**Max** - [Vrms]	**Factory setting** - [Vrms]

Description: Displays the actual output of the Isq current controller (torque/force generating current, PI controller).
The value contains the proportional and integral components of the PI controller.

r1719 Isq controller integral component / Isq_ctrl I_comp

VECTOR_G (n/M)	**Can be changed:** -	**Calculated:** -	**Access level:** 4
	Data type: FloatingPoint32	**Dynamic index:** -	**Func. diagram:** 6714
	P-Group: Closed-loop control	**Units group:** 5_1	**Unit selection:** p0505
	Not for motor type: REL	**Scaling:** p2001	**Expert list:** 1
	Min - [Vrms]	**Max** - [Vrms]	**Factory setting** - [Vrms]

Description: Displays the integral component of the Isq current controller (torque/force-generating current, PI controller).

r1723 CO: Isd controller output / Isd_ctrl outp

VECTOR_G (n/M)	**Can be changed:** -	**Calculated:** -	**Access level:** 4
	Data type: FloatingPoint32	**Dynamic index:** -	**Func. diagram:** 6714
	P-Group: Closed-loop control	**Units group:** 5_1	**Unit selection:** p0505
	Not for motor type: REL	**Scaling:** p2001	**Expert list:** 1
	Min - [Vrms]	**Max** - [Vrms]	**Factory setting** - [Vrms]

Description: Displays the actual output of the Isd current controller (flux-generating current, PI controller).
The value contains the proportional and integral components of the PI controller.

r1724 Isd controller integral component / Isd_ctrl I_comp

VECTOR_G (n/M)	**Can be changed:** -	**Calculated:** -	**Access level:** 4
	Data type: FloatingPoint32	**Dynamic index:** -	**Func. diagram:** 6714
	P-Group: Closed-loop control	**Units group:** 5_1	**Unit selection:** p0505
	Not for motor type: REL	**Scaling:** p2001	**Expert list:** 1
	Min - [Vrms]	**Max** - [Vrms]	**Factory setting** - [Vrms]

Description: Displays the integral component of the Isd current controller (flux-generating current, PI controller).

© Siemens AG 2012 All Rights Reserved

r1725 Isd controller integral component limit / Isd_ctrl I_limit

VECTOR_G (n/M)	**Can be changed:** -	**Calculated:** -	**Access level:** 4
	Data type: FloatingPoint32	**Dynamic index:** -	**Func. diagram:** 6714
	P-Group: Closed-loop control	**Units group:** 5_1	**Unit selection:** p0505
	Not for motor type: REL	**Scaling:** p2001	**Expert list:** 1
	Min	**Max**	**Factory setting**
	- [Vrms]	- [Vrms]	- [Vrms]

Description: Displays the limit value for the integral component of the Isd current controller.

p1726[0...n] Quadrature arm decoupling, scaling / Transv_decpl scal

VECTOR_G (n/M)	**Can be changed:** U, T	**Calculated:** CALC_MOD_ALL	**Access level:** 4
	Data type: FloatingPoint32	**Dynamic index:** DDS, p0180	**Func. diagram:** 6714
	P-Group: Closed-loop control	**Units group:** -	**Unit selection:** -
	Not for motor type: REL	**Scaling:** -	**Expert list:** 1
	Min	**Max**	**Factory setting**
	0.0 [%]	200.0 [%]	75.0 [%]

Description: Sets the scaling of the quadrature arm decoupling

Note: This parameter is ineffective for sensorless vector control. In this case, p1727 is always used. If p1726 is set to 0, then the quadrature de-coupling is de-activated. The integral component of the Isd current controller remains effective in the complete speed control range.

For the closed-loop control of synchronous motors, this parameter is used to scale the current controller de-coupling.

p1727[0...n] Quadrature arm decoupling at voltage limit scaling / TrnsvDecplVmaxScal

VECTOR_G (n/M)	**Can be changed:** U, T	**Calculated:** -	**Access level:** 4
	Data type: FloatingPoint32	**Dynamic index:** DDS, p0180	**Func. diagram:** 6714
	P-Group: Closed-loop control	**Units group:** -	**Unit selection:** -
	Not for motor type: REL	**Scaling:** -	**Expert list:** 1
	Min	**Max**	**Factory setting**
	0.0 [%]	200.0 [%]	50.0 [%]

Description: Sets the scaling of quadrature arm decoupling when the voltage limit is reached.

r1728 De-coupling voltage, in-line axis / U_dir-axis_decoupl

VECTOR_G (n/M)	**Can be changed:** -	**Calculated:** -	**Access level:** 3
	Data type: FloatingPoint32	**Dynamic index:** -	**Func. diagram:** 6714
	P-Group: Closed-loop control	**Units group:** 5_1	**Unit selection:** p0505
	Not for motor type: REL	**Scaling:** p2001	**Expert list:** 1
	Min	**Max**	**Factory setting**
	- [Vrms]	- [Vrms]	- [Vrms]

Description: Displays the actual output of the quadrature channel de-coupling for the d axis.

r1729 De-coupling voltage, quadrature axis / U_quad_decoupl

VECTOR_G (n/M)	**Can be changed:** -	**Calculated:** -	**Access level:** 3
	Data type: FloatingPoint32	**Dynamic index:** -	**Func. diagram:** 6714
	P-Group: Closed-loop control	**Units group:** 5_1	**Unit selection:** p0505
	Not for motor type: REL	**Scaling:** p2001	**Expert list:** 1
	Min	**Max**	**Factory setting**
	- [Vrms]	- [Vrms]	- [Vrms]

Description: Displays the actual output of the quadrature channel de-coupling for the q axis.

© Siemens AG 2012 All Rights Reserved

p1730[0...n] Isd controller integral component shutdown threshold / Isd_ctr I_compDeac

VECTOR_G (n/M)	**Can be changed:** U, T	**Calculated:** CALC_MOD_CON	**Access level:** 4
	Data type: FloatingPoint32	**Dynamic index:** DDS, p0180	**Func. diagram:** -
	P-Group: Closed-loop control	**Units group:** -	**Unit selection:** -
	Not for motor type: PEM, REL, FEM	**Scaling:** -	**Expert list:** 1
	Min 30 [%]	**Max** 150 [%]	**Factory setting** 30 [%]

Description: Sets the speed threshold for deactivating the integral component of the Isd controller. The d current controller is only effective as P controller for speeds greater than the threshold value. Instead of the integral component, the quadrature arm decoupling is effective.

Warning: For settings above 80%, the d current controller is active up to the field weakening limit. When operated at the voltage limit, this can result in an unstable behavior. In order to avoid this, the dynamic voltage reserve p1574 should be increased.

Note: The parameter value is referred to the synchronous rated motor speed.

p1731[0...n] Isd controller combination current time component / Isd ctrl iCombi T1

VECTOR_G (n/M)	**Can be changed:** U, T	**Calculated:** CALC_MOD_CON	**Access level:** 3
	Data type: FloatingPoint32	**Dynamic index:** DDS, p0180	**Func. diagram:** -
	P-Group: Closed-loop control	**Units group:** -	**Unit selection:** -
	Not for motor type: PEM, REL, FEM	**Scaling:** -	**Expert list:** 1
	Min 0.00 [ms]	**Max** 10000.00 [ms]	**Factory setting** 0.00 [ms]

Description: Sets the time constant to calculate the d current DC component difference (combination current) to add to the d current controller actual value. The additional input is de-activated with p1731 = 0.

r1732[0...1] CO: Direct-axis voltage setpoint / Direct U set

VECTOR_G (n/M)	**Can be changed:** -	**Calculated:** -	**Access level:** 3
	Data type: FloatingPoint32	**Dynamic index:** -	**Func. diagram:** 1630, 5714, 6714, 5718
	P-Group: Closed-loop control	**Units group:** 5_1	**Unit selection:** p0505
	Not for motor type: REL	**Scaling:** p2001	**Expert list:** 1
	Min - [Vrms]	**Max** - [Vrms]	**Factory setting** - [Vrms]

Description: Displays the direct-axis voltage setpoint Ud.

Index: [0] = Unsmoothed
[1] = Smoothed with p0045

r1733[0...1] CO: Quadrature-axis voltage setpoint / Quad U set

VECTOR_G (n/M)	**Can be changed:** -	**Calculated:** -	**Access level:** 3
	Data type: FloatingPoint32	**Dynamic index:** -	**Func. diagram:** 1630, 5714, 5718, 6714, 6719
	P-Group: Closed-loop control	**Units group:** 5_1	**Unit selection:** p0505
	Not for motor type: REL	**Scaling:** p2001	**Expert list:** 1
	Min - [Vrms]	**Max** - [Vrms]	**Factory setting** - [Vrms]

Description: Displays the quadrature-axis component of voltage setpoint Uq.

Index: [0] = Unsmoothed
[1] = Smoothed with p0045

© Siemens AG 2012 All Rights Reserved

p1740[0...n] Gain resonance damping for encoderless closed-loop control / Gain res_damp

VECTOR_G (n/M)	**Can be changed:** U, T	**Calculated:** CALC_MOD_CON	**Access level:** 3
	Data type: FloatingPoint32	**Dynamic index:** DDS, p0180	**Func. diagram:** -
	P-Group: Closed-loop control	**Units group:** -	**Unit selection:** -
	Not for motor type: REL	**Scaling:** -	**Expert list:** 1
	Min	**Max**	**Factory setting**
	0.000	10.000	0.025

Description: Defines the gain of the controller for resonance damping for operation with sensorless vector control in the range that current is injected.

p1744[0...n] Motor model speed threshold stall detection / MotMod n_thr stall

VECTOR_G (n/M)	**Can be changed:** U, T	**Calculated:** CALC_MOD_REG	**Access level:** 3
	Data type: FloatingPoint32	**Dynamic index:** DDS, p0180	**Func. diagram:** -
	P-Group: Closed-loop control	**Units group:** 3_1	**Unit selection:** p0505
	Not for motor type: REL, FEM	**Scaling:** -	**Expert list:** 1
	Min	**Max**	**Factory setting**
	0.00 [rpm]	210000.00 [rpm]	100.00 [rpm]

Description: Sets the speed threshold value to detect a stalled motor.
If the adaptation controller output exceeds the parameterized speed difference, then bit 11 in status word p1408 is set.

Dependency: If a stalled drive is detected (p1408.11 set), fault 7902 is output after the delay time in p2178.
Refer to: p2178

Note: Speed monitoring is only effective in operation with a speed encoder (refer to p1300).
Stalling is also identified if steps/jumps occur in the speed signal, which exceed the value in p0492.

p1745[0...n] Motor model error threshold stall detection / MotMod ThreshStall

VECTOR_G (n/M)	**Can be changed:** U, T	**Calculated:** CALC_MOD_REG	**Access level:** 3
	Data type: FloatingPoint32	**Dynamic index:** DDS, p0180	**Func. diagram:** -
	P-Group: Closed-loop control	**Units group:** -	**Unit selection:** -
	Not for motor type: -	**Scaling:** -	**Expert list:** 1
	Min	**Max**	**Factory setting**
	0.0 [%]	1000.0 [%]	5.0 [%]

Description: Sets the fault threshold in order to detect a motor that has stalled.
If the error signal (r1746) exceeds the parameterized error threshold, then status signal r1408.12 is set to 1.

Dependency: If a stalled drive is detected (r1408.12 = 1), fault F07902 is output after the delay time set in p2178.
Refer to: p2178

Note: Monitoring is only effective in the low-speed range (below p1755 * (100% - p1756)).

r1746 Motor model error signal stall detection / MotMod sig stall

VECTOR_G (n/M)	**Can be changed:** -	**Calculated:** -	**Access level:** 4
	Data type: FloatingPoint32	**Dynamic index:** -	**Func. diagram:** -
	P-Group: Closed-loop control	**Units group:** -	**Unit selection:** -
	Not for motor type: REL	**Scaling:** -	**Expert list:** 1
	Min	**Max**	**Factory setting**
	- [%]	- [%]	- [%]

Description: Signal to initiate stall detection

Note: The signal is not calculated while magnetizing and only in the low speed range (below p1755 * (100 % - p1756)).

© Siemens AG 2012 All Rights Reserved

p1748[0...n] Motor model lower changeover speed n_set -> n_act / Lower n_chngov

VECTOR_G (n/M)	**Can be changed:** U, T	**Calculated:** -	**Access level:** 3
	Data type: FloatingPoint32	**Dynamic index:** DDS, p0180	**Func. diagram:** -
	P-Group: Closed-loop control	**Units group:** -	**Unit selection:** -
	Not for motor type: ASM, PEM, REL	**Scaling:** -	**Expert list:** 1
	Min	**Max**	**Factory setting**
	0.0 [%]	90.0 [%]	50.0 [%]

Description: Sets the lower speed for the transition "n_set -> n_act" in encoderless operation.
This value is entered as a percentage referred to p1749.

Dependency: Refer to: p1749, p1752

p1749[0...n] Motor model upper changeover speed / increase changeover speed / Upper / n_chgov

VECTOR_G (n/M)	**Can be changed:** U, T	**Calculated:** -	**Access level:** 3
	Data type: FloatingPoint32	**Dynamic index:** DDS, p0180	**Func. diagram:** -
	P-Group: Closed-loop control	**Units group:** -	**Unit selection:** -
	Not for motor type: PEM, REL	**Scaling:** -	**Expert list:** 1
	Min	**Max**	**Factory setting**
	0.0 [%]	99.0 [%]	50.0 [%]

Description: For the separately-excited synchronous motor the following applies:
Sets the upper speed for the transition "n_set -> n_act" in sensorless operation.
This value is entered as a percentage of p1755.
For the encoderless closed-loop control of the induction motor, the following applies:
Depending on the machine data, the drive has calculated a minimum value of the operating frequency for rugged operation.
If the minimum value is greater than the lower changeover limit parameterized with p1755 * (1 - 2 * p1756), then the difference is displayed using p1749 * p1755.

Dependency: Refer to: p1748, p1752, p1755, p1756

p1750[0...n] Motor model configuration / MotMod config

VECTOR_G (n/M)	**Can be changed:** U, T	**Calculated:** CALC_MOD_LIM_REF	**Access level:** 3
	Data type: Unsigned8	**Dynamic index:** DDS, p0180	**Func. diagram:** -
	P-Group: Closed-loop control	**Units group:** -	**Unit selection:** -
	Not for motor type: REL, FEM	**Scaling:** -	**Expert list:** 1
	Min	**Max**	**Factory setting**
	-	-	0000 0000 bin

Description: Sets the configuration for the motor model.
Bit 0 = 1: Forces open-loop speed-controlled starting (ASM).
Bit 1 = 1: Forces the system to pass through frequency zero, open-loop-controlled (ASM).
Bit 2 = 1: Drive remains in full closed-loop control mode, even at zero frequency (ASM).
Bit 3 = 1: Motor model evaluates the saturation characteristic (ASM).
Bit 4 = 1: Time-controlled change between current and observer models (ASM).
Bit 5 = 1: HF signal injection to estimate the continuous rotor position (PESM).
Bit 6 = 1: If the motor is blocked, sensorless vector control remains speed-controlled (ASM).
Bit 7 = 1: Use rugged switchover limits to switchover the model between open-loop and closed-loop controlled operation (ASM).

Bit field:

Bit	Signal name	1 signal	0 signal	FP
00	Controlled start	Yes	No	-
01	Controlled through 0 Hz	Yes	No	-
02	Closed-loop ctrl oper. down to zero freq. for passive loads	Yes	No	-
03	Motor model Lh_pre = f(PsiEst)	Yes	No	-

© Siemens AG 2012 All Rights Reserved

04	Model changeover	Time controlled	Freq. controlled	-
05	Cl.-loop control mode PESM up to f=0Hz with HF signal injection	Yes	No	-
06	Closed-loop control when motor is blocked	Yes	No	-
07	Use rugged changeover limits	Yes	No	-

Caution:

Do not use bit 6 = 1 if the motor can be slowly reversed by the load at the torque limit. Long delay times due to blocking (p2177 > p1758) can cause the motor to stall. In this case you should de-activate the function or use closed-loop control throughout the speed range (note the information re bit 2 = 1).

Note:

Bit 0 ... 3 only have influence for sensorless vector control, bit 4 only for vector control with encoder. Bit 2 is pre-assigned depending on p0500.

Re bit 2 = 1:

The sensorless vector control is effective down to zero frequency. A change is not made into the open-loop speed controlled mode.

This operating mode is possible for passive loads. These include applications where the load itself does not generate any active torque and therefore only acts reactively to the drive torque of the induction motor.

If bit 2 = 1, then bit 3 is automatically set to 1. Manual de-selection is possible and may be sensible if the saturation characteristic (p1960) was not measured for third-party motors. Generally, for standard SIEMENS motors, the already pre-assigned (default value) saturation characteristic is adequate.

When the bit is set, the selection of bits 0 and 1 is ignored.

Re bit 2 = 0:

If the model feedback is deactivated (p1784 = 0), with bit 2 = 0, then bit 3 is also automatically set to 0.

Re bit 5 = 1:

The selection of HF signal injection is only relevant for permanent-magnet synchronous motors (PESM). Therefore, activation of bit 5 is only possible outside of motor commissioning (p0010 = 0).

In order to achieve user-friendly configuration of the power unit components in the oversampling mode, when activated for the first time, initially p1810 bit 3 is set, and then an automatic system boot is initiated. This is only possible if all of the axes connected to the CU are switched off (refer to the setting conditions for p0009); otherwise, it is not possible to set the bit.

When deactivating p1750 bit 5, p1810 bit 3 remains unchanged and the system does not boot again.

Therefore, to reverse configure the power unit components from the oversampling mode (after manually deselecting p1750 bit 5) then initially p1810 bit 3 must be manually deleted and then a manual warm restart initiated.

As an alternative to a warm restart: save the parameters and carry out a POWER ON (switch-off/switch-on).

When the function "safety without encoder" (p9306/p9506) is activated, this setting is not permissible and results in monitoring errors.

Re bit 6 = 1:

The following applies for encoderless vector control of induction motors:

For a blocked motor (see p2175, p2177) the time condition in p1758 is bypassed and a change is not made into open-loop controlled operation.

Re bit 7 = 1:

The following applies for encoderless vector control of induction motors:

If the changeover limits are parameterized too low (p1755, p1756), then they are automatically increased to rugged values by the absolute amount p1749 * p1755.

The effective time condition for changing over into open-controlled operation is obtained from the minimum of p1758 and 0.5 * r0384.

Activation can make sense for applications that demand a high torque at low frequencies and therefore low speed gradients.

It must be ensured that p1610, p1611 have been adequately parameterized.

r1751 Motor model status / MotMod status

VECTOR_G (n/M)

Can be changed: -	**Calculated:** -	**Access level:** 3
Data type: Unsigned32	**Dynamic index:** -	**Func. diagram:** -
P-Group: Closed-loop control	**Units group:** -	**Unit selection:** -
Not for motor type: REL, FEM	**Scaling:** -	**Expert list:** 1
Min	**Max**	**Factory setting**
-	-	-

Description:

Displays the status of the motor model.

© Siemens AG 2012 All Rights Reserved

Bit field:

Bit	Signal name	1 signal	0 signal	FP
00	Controlled operation	Active	Inactive	6721
01	Set ramp-function generator	Active	Inactive	-
02	Stop RsLh adaptation	Yes	No	-
03	Feedback	Active	Inactive	-
04	Encoder operation	Active	Inactive	-
05	Holding angle	Yes	No	-
06	Acceleration criterion	Active	Inactive	-
07	Set angular integrator PEM	No	Yes	-
08	Stop Kt adaptation PEM	No	Yes	-
09	PolID active PEM SLVC	No	Yes	-
10	I injection PEM	No	Yes	-
11	Speed controller output cannot be set to zero	Yes	No	-
12	Rs adapt waits	Yes	No	-
13	mot oper	Yes	No	-
14	Stator frequency sign	Positive	Negative	-
15	Torque sign	Motor mode	Regenerative mode	-
16	Pulse injection active PEM	Yes	No	-
17	Operation with rugged model feedback	Enabled	Inhibited	-
18	Operation of the current model with current feedback	Enabled	Inhibited	-
19	Current feedback in the current model	Active	Inactive	-
20	Rugged increase of the changeover limits	Active	Inactive	-

Note:

Re bit 17:

Displays the status when enabling the rugged model feedback (p1784) for operation with and without encoder.

The feedback is used to increase the parameter ruggedness of the motor model and is effective in the operating range of the two-component closed loop current control.

Re bit 18:

Displays the status when enabling the differential current feedback in the current model for operation with encoder.

The function is automatically enabled with p1784 > 0 or p1731 > 0. The feedback is used for a rugged change between the current model and complete machine model with active rugged model feedback and combination current.

Re bit 19:

Displays the currently active stator circuit feedback in current model operation.

Re bit 20:

Displays the currently effective increase of the changeover limits by the value p1749 * p1755.

p1752[0...n] Motor model changeover speed operation with encoder / MotMod n_chgov enc

VECTOR_G

Can be changed: U, T	**Calculated:** CALC_MOD_REG	**Access level:** 3
Data type: FloatingPoint32	**Dynamic index:** DDS, p0180	**Func. diagram:** -
P-Group: Closed-loop control	**Units group:** 3_1	**Unit selection:** p0505
Not for motor type: REL	**Scaling:** -	**Expert list:** 1
Min	**Max**	**Factory setting**
0.00 [rpm]	210000.00 [rpm]	210000.00 [rpm]

Description: Sets the speed to change over the motor model for operation with encoder.

Dependency: In U/f characteristic mode the parameter is of no significance.

Using the friction characteristic for operation with encoder:

When changing the motor model changeover speed p1752, the points along the friction characteristic should be recalculated (p0340 = 5) and the friction characteristic recorded again (p3845). For slight changes, only the associated friction characteristic points must be recorded (see p3844).

Refer to: p1756

© Siemens AG 2012 All Rights Reserved

p1753[0...n] Motor model changeover speed hysteresis operation with encoder / MotMod n_chgovHysE

VECTOR_G (n/M)	**Can be changed:** U, T	**Calculated:** CALC_MOD_REG	**Access level:** 3
	Data type: FloatingPoint32	**Dynamic index:** DDS, p0180	**Func. diagram:** -
	P-Group: Closed-loop control	**Units group:** -	**Unit selection:** -
	Not for motor type: REL	**Scaling:** -	**Expert list:** 1
	Min	**Max**	**Factory setting**
	0.0 [%]	90.0 [%]	0.0 [%]

Description: Sets the hysteresis for the changeover speed of the motor model for operation with speed encoder.

Dependency: Refer to: p1752

Note: The value refers to p1752. In the case of separately excited synchronous motors, the lower hysteresis value is calculated with p1752 * p1753; in the case of all other types of motor, p1752 * (1 - p1753) is used.

p1754[0...n] Flux angle difference smoothing time / Angle diff T_smth

VECTOR_G (n/M)	**Can be changed:** U, T	**Calculated:** -	**Access level:** 3
	Data type: FloatingPoint32	**Dynamic index:** DDS, p0180	**Func. diagram:** 6733
	P-Group: Closed-loop control	**Units group:** -	**Unit selection:** -
	Not for motor type: ASM, REL	**Scaling:** -	**Expert list:** 1
	Min	**Max**	**Factory setting**
	0.1 [ms]	10000.0 [ms]	5.0 [ms]

Description: Sets the smoothing time constant to filter the main flux angle difference from the voltage and current models.
The filtered value is included in the calculation of the total flux angle.
PESM: Sets the smoothing time constant for the angular difference display between motor model and encoder.

Note: In the case of a separately excited synchronous motor and sensorless vector control, the parameter must be set to the minimum value to improve motor model changeover.

p1755[0...n] Motor model changeover speed encoderless operation / MotMod n_chgSnsorl

VECTOR_G	**Can be changed:** U, T	**Calculated:** CALC_MOD_REG	**Access level:** 3
	Data type: FloatingPoint32	**Dynamic index:** DDS, p0180	**Func. diagram:** -
	P-Group: Closed-loop control	**Units group:** 3_1	**Unit selection:** p0505
	Not for motor type: REL	**Scaling:** -	**Expert list:** 1
	Min	**Max**	**Factory setting**
	0.00 [rpm]	210000.00 [rpm]	210000.00 [rpm]

Description: Sets the speed to change over the motor model to encoderless operation.

Dependency: In U/f characteristic mode the parameter is of no significance.
Refer to: p1749, p1756

Notice: The changeover speed represents the steady-state minimum speed up to which the motor model can be used in sensorless steady-state operation.
If the stability is not adequate close to the changeover speed, it may make sense to increase the parameter value.

Note: The changeover speed applies for the changeover between open-loop and closed-loop control mode.

p1756 Motor model changeover speed hysteresis encoderless operation / MotMod n_chgov hys

VECTOR_G	**Can be changed:** U, T	**Calculated:** CALC_MOD_REG	**Access level:** 3
	Data type: FloatingPoint32	**Dynamic index:** -	**Func. diagram:** 6730, 6731, 6732, 6733
	P-Group: Closed-loop control	**Units group:** -	**Unit selection:** -
	Not for motor type: REL	**Scaling:** -	**Expert list:** 1
	Min	**Max**	**Factory setting**
	0.0 [%]	95.0 [%]	50.0 [%]

Description: Sets the hysteresis for the changeover speed of the motor model for encoderless operation.

© Siemens AG 2012 All Rights Reserved

Dependency: In U/f characteristic mode the parameter is of no significance.
Refer to: p1755

Note: The parameter value refers to p1755.
In the case of separately excited synchronous motors, the lower hysteresis value is calculated with p1755 * p1756; in the case of all other types of motor, p1755 * (1 - p1756) is used.

p1757[0...n] Motor model w/o enc. op./cl.-loop controlled stab. controller Kp / MotMod w/o enc Kp

VECTOR_G (n/M)

Can be changed: U, T	**Calculated:** CALC_MOD_CON	**Access level:** 4
Data type: FloatingPoint32	**Dynamic index:** DDS, p0180	**Func. diagram:** -
P-Group: Closed-loop control	**Units group:** -	**Unit selection:** -
Not for motor type: REL, FEM	**Scaling:** -	**Expert list:** 1
Min	**Max**	**Factory setting**
0.01	10.00	0.70

Description: Sets the gain of the transient response controller when the motor model changes over from open-loop controlled operation to closed-loop controlled operation.

Note: Only for ASM and PSM in encoderless operation:
The settling range starts at 0.5 * p1755 * p1756.
For ASM it ends at p1755 * p1756 or at p1755, if p1759 is at the maximum value.
For PSM it always ends at p1755 * p1756.

p1758[0...n] Motor model changeover delay time closed/open-loop control / MotMod t cl_op

VECTOR_G (n/M)

Can be changed: U, T	**Calculated:** -	**Access level:** 3
Data type: FloatingPoint32	**Dynamic index:** DDS, p0180	**Func. diagram:** -
P-Group: Closed-loop control	**Units group:** -	**Unit selection:** -
Not for motor type: PEM, REL, FEM	**Scaling:** -	**Expert list:** 1
Min	**Max**	**Factory setting**
100 [ms]	10000 [ms]	1000 [ms]

Description: Sets the minimum time for falling below the changeover speed when changing from closed-loop controlled operation to open-loop controlled operation.

Dependency: Refer to: p1755, p1756

p1759[0...n] Motor model changeover delay time open/closed-loop control / MotMod t op_cl

VECTOR_G (n/M)

Can be changed: U, T	**Calculated:** -	**Access level:** 3
Data type: FloatingPoint32	**Dynamic index:** DDS, p0180	**Func. diagram:** -
P-Group: Closed-loop control	**Units group:** -	**Unit selection:** -
Not for motor type: PEM, REL, FEM	**Scaling:** -	**Expert list:** 1
Min	**Max**	**Factory setting**
0 [ms]	2000 [ms]	0 [ms]

Description: Sets the minimum time for exceeding the changeover speed when changing from open-loop controlled operation to closed-loop controlled operation.

Dependency: Refer to: p1755, p1756

Note: When p1759 = 2000 ms, the delay time becomes ineffective and the model changeover is determined by the output frequency only.

p1760[0...n] Motor model with encoder speed adaptation Kp / MotMod wE n_ada Kp

VECTOR_G (n/M)

Can be changed: U, T	**Calculated:** CALC_MOD_CON	**Access level:** 3
Data type: FloatingPoint32	**Dynamic index:** DDS, p0180	**Func. diagram:** -
P-Group: Closed-loop control	**Units group:** -	**Unit selection:** -
Not for motor type: REL, FEM	**Scaling:** -	**Expert list:** 1
Min	**Max**	**Factory setting**
0.000	100000.000	1000.000

Description: Sets the proportional gain of the controller for speed adaptation with encoder

© Siemens AG 2012 All Rights Reserved

p1761[0...n] Motor model with encoder speed adaptation Tn / MotMod wE n_ada Tn

VECTOR_G (n/M)	**Can be changed:** U, T	**Calculated:** CALC_MOD_CON	**Access level:** 3
	Data type: FloatingPoint32	**Dynamic index:** DDS, p0180	**Func. diagram:** -
	P-Group: Closed-loop control	**Units group:** -	**Unit selection:** -
	Not for motor type: REL, FEM	**Scaling:** -	**Expert list:** 1
	Min	**Max**	**Factory setting**
	0 [ms]	1000 [ms]	4 [ms]

Description: Sets the integral-action time of the controller for speed adaptation with encoder

r1762[0...1] Motor model deviation component 1 / MotMod dev comp 1

VECTOR_G (n/M)	**Can be changed:** -	**Calculated:** -	**Access level:** 4
	Data type: FloatingPoint32	**Dynamic index:** -	**Func. diagram:** 6721, 6730, 6731
	P-Group: Closed-loop control	**Units group:** -	**Unit selection:** -
	Not for motor type: REL, FEM	**Scaling:** -	**Expert list:** 1
	Min	**Max**	**Factory setting**
	-	-	-

Description: Induction motor (ASM):
Displays the referred imaginary system deviation for the adaptation circuit of the motor model.
Permanent-magnet synchronous motor (PESM):
Displays the system deviation for speed adaptation.
r1762.0: Angular deviation [rad-el] of the estimated EMF.
r1762.1: Angular deviation [rad-el] of the low-level signal response for pulse technique.

Index: [0] = Deviation Model1
[1] = Deviation Model2

r1763 Motor model deviation component 2 / MotMod dev comp 2

VECTOR_G (n/M)	**Can be changed:** -	**Calculated:** -	**Access level:** 4
	Data type: FloatingPoint32	**Dynamic index:** -	**Func. diagram:** -
	P-Group: Closed-loop control	**Units group:** -	**Unit selection:** -
	Not for motor type: REL, FEM	**Scaling:** -	**Expert list:** 1
	Min	**Max**	**Factory setting**
	-	-	-

Description: Induction motor (ASM):
Displays the referred real system deviation for the adaptation circuit of the motor model.
Permanent-magnet synchronous motor (PESM):
Not used.

p1764[0...n] Motor model without encoder speed adaptation Kp / MotMod woE n_adaKp

VECTOR_G (n/M)	**Can be changed:** U, T	**Calculated:** CALC_MOD_CON	**Access level:** 3
	Data type: FloatingPoint32	**Dynamic index:** DDS, p0180	**Func. diagram:** 6730
	P-Group: Closed-loop control	**Units group:** -	**Unit selection:** -
	Not for motor type: REL, FEM	**Scaling:** -	**Expert list:** 1
	Min	**Max**	**Factory setting**
	0.000	100000.000	1000.000

Description: Sets the proportional gain of the controller for speed adaptation without encoder.

© Siemens AG 2012 All Rights Reserved

r1765 Motor model, speed adaptation Kp effective / MotM n_ada Kp act

VECTOR_G (n/M)

Can be changed: -	**Calculated:** -	**Access level:** 4
Data type: FloatingPoint32	**Dynamic index:** -	**Func. diagram:** -
P-Group: Closed-loop control	**Units group:** -	**Unit selection:** -
Not for motor type: REL, FEM	**Scaling:** p2001	**Expert list:** 1
Min	**Max**	**Factory setting**
-	-	-

Description: Displays the effective proportional gain of the controller for the speed adaptation.

p1766[0...n] Motor model voltage model calculation enable / U_mod calc enab

VECTOR_G (n/M)

Can be changed: U, T	**Calculated:** -	**Access level:** 3
Data type: FloatingPoint32	**Dynamic index:** DDS, p0180	**Func. diagram:** -
P-Group: Closed-loop control	**Units group:** -	**Unit selection:** -
Not for motor type: ASM, REL	**Scaling:** -	**Expert list:** 1
Min	**Max**	**Factory setting**
0.0 [%]	90.0 [%]	50.0 [%]

Description: Sets the speed to enable the voltage model to calculate the speed actual value.
This value is entered as a percentage referred to p1752.

Dependency: Refer to: p1748, p1752

p1767[0...n] Motor model without encoder speed adaptation Tn / MotMod woE n_adaTn

VECTOR_G (n/M)

Can be changed: U, T	**Calculated:** CALC_MOD_CON	**Access level:** 3
Data type: FloatingPoint32	**Dynamic index:** DDS, p0180	**Func. diagram:** 6730
P-Group: Closed-loop control	**Units group:** -	**Unit selection:** -
Not for motor type: REL, FEM	**Scaling:** -	**Expert list:** 1
Min	**Max**	**Factory setting**
1 [ms]	200 [ms]	4 [ms]

Description: Sets the integral time of the controller for speed adaptation without encoder

r1768 Motor model, speed adaptation Vi effective / MotM n_ada Vi act

VECTOR_G (n/M)

Can be changed: -	**Calculated:** -	**Access level:** 4
Data type: FloatingPoint32	**Dynamic index:** -	**Func. diagram:** -
P-Group: Closed-loop control	**Units group:** -	**Unit selection:** -
Not for motor type: REL, FEM	**Scaling:** p2001	**Expert list:** 1
Min	**Max**	**Factory setting**
-	-	-

Description: Displays the effective gain of the integral component of the controller for speed adaptation.

r1770 CO: Motor model speed adaptation proportional component / MotMod n_adapt Kp

VECTOR_G (n/M)

Can be changed: -	**Calculated:** -	**Access level:** 3
Data type: FloatingPoint32	**Dynamic index:** -	**Func. diagram:** 6730
P-Group: Closed-loop control	**Units group:** 3_1	**Unit selection:** p0505
Not for motor type: REL, FEM	**Scaling:** p2000	**Expert list:** 1
Min	**Max**	**Factory setting**
- [rpm]	- [rpm]	- [rpm]

Description: Displays the P component of the controller for speed adaptation.

© Siemens AG 2012 All Rights Reserved

r1771 CO: Motor model speed adaptation I comp. / MotMod n_adapt Tn

VECTOR_G (n/M)

Can be changed: -	**Calculated:** -	**Access level:** 3
Data type: FloatingPoint32	**Dynamic index:** -	**Func. diagram:** 6730
P-Group: Closed-loop control	**Units group:** 3_1	**Unit selection:** p0505
Not for motor type: REL, FEM	**Scaling:** p2000	**Expert list:** 1
Min	**Max**	**Factory setting**
- [rpm]	- [rpm]	- [rpm]

Description: Displays the I component of the controller for speed adaptation.

r1773[0...1] Motor model slip speed / MotMod slip

VECTOR_G (n/M)

Can be changed: -	**Calculated:** -	**Access level:** 3
Data type: FloatingPoint32	**Dynamic index:** -	**Func. diagram:** -
P-Group: Closed-loop control	**Units group:** 3_1	**Unit selection:** p0505
Not for motor type: REL, FEM	**Scaling:** -	**Expert list:** 1
Min	**Max**	**Factory setting**
- [rpm]	- [rpm]	- [rpm]

Description: Displays estimated (speed) signals of the motor model.
r1773[0]: Displays the estimated (mechanical) slip of the motor model.
r1773[1]: Displays the estimated input speed of the motor model.

Index: [0] = Slip speed estimated
[1] = Speed estimated

p1774[0...n] Motor model, offset voltage compensation alpha / MotMod offs comp A

VECTOR_G (n/M)

Can be changed: U, T	**Calculated:** -	**Access level:** 4
Data type: FloatingPoint32	**Dynamic index:** DDS, p0180	**Func. diagram:** -
P-Group: Closed-loop control	**Units group:** -	**Unit selection:** -
Not for motor type: PEM, REL, FEM	**Scaling:** -	**Expert list:** 1
Min	**Max**	**Factory setting**
-5.000 [V]	5.000 [V]	0.000 [V]

Description: Sets the offset voltage in the alpha direction; this compensates the offset voltages of the drive converter/inverter at low speeds. The value is valid for the rated (nominal) pulse frequency of the power unit.

Note: The value is pre-set during the rotating measurement.

p1775[0...n] Motor model, offset voltage compensation beta / MotMod offs comp B

VECTOR_G (n/M)

Can be changed: U, T	**Calculated:** -	**Access level:** 4
Data type: FloatingPoint32	**Dynamic index:** DDS, p0180	**Func. diagram:** -
P-Group: Closed-loop control	**Units group:** -	**Unit selection:** -
Not for motor type: PEM, REL, FEM	**Scaling:** -	**Expert list:** 1
Min	**Max**	**Factory setting**
-5.000 [V]	5.000 [V]	0.000 [V]

Description: Sets the offset voltage in the beta direction; this compensates the offset voltages of the drive converter/inverter at low speeds. The value is valid for the rated (nominal) pulse frequency of the power unit.

Note: The value is pre-set during the rotating measurement.

r1776[0...6] Motor model status signals / MotMod status sig

VECTOR_G (n/M)

Can be changed: -	**Calculated:** -	**Access level:** 4
Data type: FloatingPoint32	**Dynamic index:** -	**Func. diagram:** -
P-Group: Closed-loop control	**Units group:** -	**Unit selection:** -
Not for motor type: REL	**Scaling:** -	**Expert list:** 1
Min	**Max**	**Factory setting**
-	-	-

Description: Displays the internal status signals of the motor model:

© Siemens AG 2012 All Rights Reserved

Index 0: Changeover ramp between current and voltage models
Index 1: Changeover ramp for model tracking (encoderless induction motors only)
Index 2: Changeover ramp for zero frequency range (encoderless induction motors only)
Index 3: Transition ramp actual speed from speed setpoint to model value (encoderless FEM)
Index 4: Speed controller enable (encoderless FEM)
Index 5: Transition ramp between current and voltage models (encoderless FEM)
Index 6: Transition ramp for EMF deviation at PLL input (encoderless PESM)

Index: [0] = Changeover ramp motor model
[1] = Changeover ramp model tracking
[2] = Changeover ramp zero frequency encoderless ASM
[3] = Changeover ramp actual speed encoderless FEM
[4] = Enable speed controller encoderless FEM
[5] = Changeover ramp motor model encoderless FEM
[6] = Changeover ramp motor model encoderless PESM

Note: Indices 3 through 5 are only relevant in the case of encoderless control of separately excited synchronous motors.

r1778 Motor model flux angle difference / MotMod ang. diff.

VECTOR_G (n/M)

Can be changed: -	**Calculated:** -	**Access level:** 4
Data type: FloatingPoint32	**Dynamic index:** -	**Func. diagram:** -
P-Group: Closed-loop control	**Units group:** -	**Unit selection:** -
Not for motor type: REL	**Scaling:** p2005	**Expert list:** 1
Min	**Max**	**Factory setting**
- [°]	- [°]	- [°]

Description: Induction motor (ASM):
Displays the difference between the motor model flux angle and the transformation angle.
Permanent-magnet synchronous motor (PESM):
Displays the angular difference between motor model and encoder.

Dependency: A setting for smoothing the display can be made using p1754.

r1779 Motor model absolute flux / MotMod abs flux

VECTOR_G (n/M)

Can be changed: -	**Calculated:** -	**Access level:** 3
Data type: FloatingPoint32	**Dynamic index:** -	**Func. diagram:** -
P-Group: Closed-loop control	**Units group:** -	**Unit selection:** -
Not for motor type: PEM, REL, FEM	**Scaling:** PERCENT	**Expert list:** 1
Min	**Max**	**Factory setting**
- [%]	- [%]	- [%]

Description: Displays the absolute value of the flux of the motor model.

p1780[0...n] Motor model adaptation configuration / MotMod adapt conf

VECTOR_G

Can be changed: U, T	**Calculated:** -	**Access level:** 3
Data type: Unsigned16	**Dynamic index:** DDS, p0180	**Func. diagram:** -
P-Group: Closed-loop control	**Units group:** -	**Unit selection:** -
Not for motor type: REL	**Scaling:** -	**Expert list:** 1
Min	**Max**	**Factory setting**
-	-	0000 0000 0111 1100 bin

Description: Sets the configuration for the adaptation circuit of the motor model.
Induction motor (ASM): Rs, Rr (only for operation with encoder), Lh and offset compensation.
Permanent magnet synchronous motor (PEM): kT

Bit field:

Bit	Signal name	1 signal	0 signal	FP
01	Select motor model ASM Rs adaptation	Yes	No	-
02	Select motor model ASM Lh adaptation	Yes	No	-
03	Select motor model PEM kT adaptation	Yes	No	-
04	Select motor model offset adaptation	Yes	No	-

© Siemens AG 2012 All Rights Reserved

05	Select ASM Rr adaptation (only with encoder)	Yes	No	-
06	Select pole position identification PEM encoderless	Yes	No	-
07	Select T(valve) with Rs adaptation	Yes	No	-
10	Filter time combination current like current ctrl integral time	Yes	No	-

Dependency: In U/f characteristic operating mode only bit 7 is relevant.

For active motor model feedback (see p1784), the Lh adaptation is internally deactivated automatically.

When the power units are connected in parallel with separate, offset motor winding systems (p7003 = 2), then the compensation of the valve interlocking times should be implemented as Rs adaptation (bit 7 = 1).

Note: ASM: Induction motor

PEM: Permanent magnet synchronous motor

When selecting the compensation of the valve interlocking via Rs (bit 7), the compensation in the gating unit is deactivated and is instead taken into account in the motor model.

In order that the correction values of the Rs, Lh and kT adaptation (selected using Bit 0 ... Bit 2) are correctly accepted when changing over the drive data set, a dedicated motor number must be entered into p0826 for each different motor.

p1784[0...n] Motor model feedback scaling / MotMod fdbk scal

VECTOR_G (n/M)

Can be changed: U, T	**Calculated:** CALC_MOD_CON	**Access level:** 3
Data type: FloatingPoint32	**Dynamic index:** DDS, p0180	**Func. diagram:** -
P-Group: Closed-loop control	**Units group:** -	**Unit selection:** -
Not for motor type: PEM, REL, FEM	**Scaling:** -	**Expert list:** 1
Min	**Max**	**Factory setting**
0.0 [%]	1000.0 [%]	0.0 [%]

Description: Sets the scaling for model fault feedback.

Note: Feeding back the measured model fault to the model states increases the control stability and makes the motor model rugged against parameter errors.

When feedback is selected (p1784 > 0), Lh adaptation is not effective.

p1785[0...n] Motor model Lh adaptation Kp / MotMod Lh Kp

VECTOR_G (n/M)

Can be changed: U, T	**Calculated:** CALC_MOD_CON	**Access level:** 3
Data type: FloatingPoint32	**Dynamic index:** DDS, p0180	**Func. diagram:** -
P-Group: Closed-loop control	**Units group:** -	**Unit selection:** -
Not for motor type: PEM, REL, FEM	**Scaling:** -	**Expert list:** 1
Min	**Max**	**Factory setting**
0.000	10.000	0.100

Description: Sets the proportional gain for the Lh adaptation of the motor model for an induction motor (ASM).

p1786[0...n] Motor model Lh adaptation integral time / MotMod Lh Tn

VECTOR_G (n/M)

Can be changed: U, T	**Calculated:** CALC_MOD_CON	**Access level:** 3
Data type: FloatingPoint32	**Dynamic index:** DDS, p0180	**Func. diagram:** -
P-Group: Closed-loop control	**Units group:** -	**Unit selection:** -
Not for motor type: PEM, REL, FEM	**Scaling:** -	**Expert list:** 1
Min	**Max**	**Factory setting**
10 [ms]	10000 [ms]	100 [ms]

Description: Sets the integral time for the Lh adaptation of the motor model for an induction motor (ASM).

© Siemens AG 2012 All Rights Reserved

r1787[0...n] Motor model Lh adaptation corrective value / MotMod Lh corr

VECTOR_G (n/M)	**Can be changed:** -	**Calculated:** -	**Access level:** 3
	Data type: FloatingPoint32	**Dynamic index:** DDS, p0180	**Func. diagram:** -
	P-Group: Closed-loop control	**Units group:** -	**Unit selection:** -
	Not for motor type: PEM, REL, FEM	**Scaling:** -	**Expert list:** 1
	Min - [mH]	**Max** - [mH]	**Factory setting** - [mH]

Description: Displays the corrective value for the Lh adaptation of the motor model for an induction motor (ASM).

Dependency: Refer to: p0826, p1780

Note: The adaptation result is reset if the magnetizing inductance of the induction motor is changed (p0360, r0382). This also happens when changing over the data set if a different motor is not being used (p0826).

The display of the inactive data sets is only updated when changing over the data set.

r1791 Motor model Lh adaptation power-on frequency / MotMod Lh f_on

VECTOR_G (n/M)	**Can be changed:** -	**Calculated:** -	**Access level:** 4
	Data type: FloatingPoint32	**Dynamic index:** -	**Func. diagram:** -
	P-Group: Closed-loop control	**Units group:** -	**Unit selection:** -
	Not for motor type: PEM, REL, FEM	**Scaling:** -	**Expert list:** 1
	Min - [Hz]	**Max** - [Hz]	**Factory setting** - [Hz]

Description: Displays the power-on stator frequency/ primary section frequency for the Lh adaptation for the induction motor (ASM).

r1792 Motor model Lh adaptation power-on slip / MotMod Lh fslip

VECTOR_G (n/M)	**Can be changed:** -	**Calculated:** -	**Access level:** 4
	Data type: FloatingPoint32	**Dynamic index:** -	**Func. diagram:** -
	P-Group: Closed-loop control	**Units group:** -	**Unit selection:** -
	Not for motor type: PEM, REL, FEM	**Scaling:** -	**Expert list:** 1
	Min - [Hz]	**Max** - [Hz]	**Factory setting** - [Hz]

Description: Displays the power-on slip frequency for the Lh adaptation for the induction motor (ASM).

p1795[0...n] Motor model kT adaptation integral time / MotMod kT Tn

VECTOR_G (n/M)	**Can be changed:** U, T	**Calculated:** CALC_MOD_CON	**Access level:** 3
	Data type: FloatingPoint32	**Dynamic index:** DDS, p0180	**Func. diagram:** 6731
	P-Group: Closed-loop control	**Units group:** -	**Unit selection:** -
	Not for motor type: ASM, REL, FEM	**Scaling:** -	**Expert list:** 1
	Min 10 [ms]	**Max** 10000 [ms]	**Factory setting** 100 [ms]

Description: Sets the integral time of the kT adaptation of the motor model for a permanent-magnet synchronous motor (PEM).

r1797[0...n] Motor model kT adaptation corrective value / MotMod kT corr

VECTOR_G (n/M)	**Can be changed:** -	**Calculated:** -	**Access level:** 3
	Data type: FloatingPoint32	**Dynamic index:** DDS, p0180	**Func. diagram:** 6731
	P-Group: Closed-loop control	**Units group:** -	**Unit selection:** -
	Not for motor type: ASM, REL, FEM	**Scaling:** -	**Expert list:** 1
	Min - [Nm/A]	**Max** - [Nm/A]	**Factory setting** - [Nm/A]

Description: Displays the corrective value of the kT adaptation of the motor model for a permanent-magnet synchronous motor (PEM).

Dependency: Refer to: p0826, p1780

Note: The display of the inactive data sets is only updated when changing over the data set.

© Siemens AG 2012 All Rights Reserved

p1798[0...n] Motor model pulse technique speed adaptation Kp / MotMod pulses Kp

VECTOR_G (n/M)	**Can be changed:** U, T	**Calculated:** CALC_MOD_CON	**Access level:** 3
	Data type: FloatingPoint32	**Dynamic index:** DDS, p0180	**Func. diagram:** -
	P-Group: Closed-loop control	**Units group:** -	**Unit selection:** -
	Not for motor type: ASM, REL, FEM	**Scaling:** -	**Expert list:** 1
	Min	**Max**	**Factory setting**
	0.000	1000.000	1.000

Description: Sets the proportional gain Kp for speed adaptation with active pulse technique for the estimation of the continuous rotor position.

p1800[0...n] Pulse frequency setpoint / Pulse freq setp

VECTOR_G	**Can be changed:** U, T	**Calculated:** -	**Access level:** 2
	Data type: FloatingPoint32	**Dynamic index:** DDS, p0180	**Func. diagram:** -
	P-Group: Modulation	**Units group:** -	**Unit selection:** -
	Not for motor type: -	**Scaling:** -	**Expert list:** 1
	Min	**Max**	**Factory setting**
	1.000 [kHz]	16.000 [kHz]	4.000 [kHz]

Description: Sets the pulse frequency for the converter.

This parameter is pre-set to the rated converter value when the drive is first commissioned.

Dependency: The pulse frequency can, depending on the current controller sampling time (p0115[0]) assume the following values:

p1800 = 1000 / (p0115[0] * 2)

or

p1800 = n*1000 / p0115[0] with n = 1, 2, 3, ...

Example:

p0115[0] = 250 µs --> p1800 = 2, 4, 8, 12, 16 kHz

Possible setting values can be taken from r0114 (if p0009 = p0010 = 0).

If p0092 = 1 the sampling times p0115 and the pulse frequency p1800 are checked every time the parameters are downloaded, and reset to the initial values if necessary. This check can be de-activated by setting p0092 = 0 (making this setting does not affect isochronous PROFIBUS operation).

If wobbulation is selected (p1810.2), the pulse frequency can only be changed as part of pulse enabling to values with the following ratio:

a) p1800 <= 1000 / p0115[0] for p1811 > 0 %

b) p1800 <= 1000 * 2 / p0115[0] for p 1811 = 0 %

Under pulse inhibit

p1800 > 1000 / p0115[0] -> p1811 = 0

p1800 > 1000 * 2 / p0115[0] -> 1810.2 = 0 and p1811 = 0

(applicable for all indices)

Refer to: r0110, r0111, p0112, p0113, r0114, p0115, p0230, p1817

Notice: The pulse frequency p1800 can also be asynchronously set to the current controller clock cycle (0.05 kHz increment). To do this, p1810 bit 12 must be set to 1 (secondary condition, see p1810).

Effects:

- switchover of the gating unit (p1810 bit 2)
- current actual value correction is activated (p1840 bit 0)
- minimum pulse frequency 1000 * 0.5 / p0115[0]
- maximum pulse frequency 1000 * 2 / p0115[0]
- fluctuating deadtimes and dynamic performance in the current control loop
- increased level of current ripple in the current display

© Siemens AG 2012 All Rights Reserved

Note: The maximum possible pulse frequency is also determined by the power unit being used.

When the pulse frequency is increased, depending on the particular power unit, the maximum output current can be reduced (derating, refer to r0067).

The maximum pulse frequency for operation with output reactors (see p0230) is 4 kHz for booksize and blocksize power units, for chassis power units it is twice the rated pulse frequency (2.5 kHz or 4 kHz).

If a sine-wave filter is parameterized as output filter (p0230 = 3), then the pulse frequency cannot be set below the minimum value required for the filter. If an external sine-wave filter is parameterized, (p0230 = 4), then the minimum pulse frequency is calculated as follows:

f_puls_min = 1.6 / (2 * Pi * root(p0233 * p0234 * p0235)), with p0233 in H and p0234 in F

In this case, the pulse frequency must be a multiple of the inverse value of the current controller sampling time (p0115[0]).

If a sine-wave filter is parameterized as output filter (p0230 = 3), then the pulse frequency cannot be changed below the minimum value required for the filter.

If p1800 is changed while commissioning (p0009, p0010 > 0), then it is possible that the old value will no longer be able to be set. The reason for this is that the dynamic limits of p1800 have been changed by a parameter that was set when the drive was commissioned (e.g. p1082).

r1801[0...1] CO: Pulse frequency / Pulse frequency

VECTOR_G	**Can be changed:** -	**Calculated:** -	**Access level:** 3
	Data type: FloatingPoint32	**Dynamic index:** -	**Func. diagram:** -
	P-Group: Displays, signals	**Units group:** -	**Unit selection:** -
	Not for motor type: -	**Scaling:** p2000	**Expert list:** 1
	Min - [kHz]	**Max** - [kHz]	**Factory setting** - [kHz]

Description: Display and connector output for the actual converter switching frequency.

Index: [0] = Actual
[1] = Modulator minimum value

Note: The selected pulse frequency (p1800) may be reduced if the drive converter has an overload condition (p0290).

The following applies for vector drives (p0107):

The pulse frequency can also be reduced when changing over the modulator to an optimized pulse pattern. This is used to avoid overcontrol.

In the case of chassis power units, two-thirds of the setpoint pulse frequency is displayed in the FLB modulation range.

p1802[0...n] Modulator mode / Modulator mode

VECTOR_G	**Can be changed:** T	**Calculated:** CALC_MOD_LIM_REF	**Access level:** 3
	Data type: Integer16	**Dynamic index:** DDS, p0180	**Func. diagram:** -
	P-Group: Modulation	**Units group:** -	**Unit selection:** -
	Not for motor type: -	**Scaling:** -	**Expert list:** 1
	Min 0	**Max** 9	**Factory setting** 0

Description: Sets the modulator mode.

Value:
0: Automatic changeover SVM/FLB
1: Flat top modulation (FLB)
2: Space vector modulation (SVM)
3: SVM without overcontrol
4: SVM/FLB without overcontrol
5: SVM with pulse frequency reduction
6: SVM/FLB with pulse frequency reduction
7: No edge modulation up to 100 Hz
8: No edge modulation up to 60 Hz
9: Edge modulation

Dependency: If a sine-wave filter is parameterized as output filter (p0230 = 3, 4), or if the power unit firmware is not able to calculate edge modulation (r0192.0 = 0), then only space vector modulation without overcontrol can be set as modulation type (p1802 = 3).

Refer to: r0192, p0230, p7003

© Siemens AG 2012 All Rights Reserved

Notice: If the pulse patterns are enabled with overmodulation option (p1802 < 3) or edge modulation (p1802 > 6), then the current actual value correction is automatically activated (p1840.0 = 0).

Note: When modulation modes are enabled that could lead to overmodulation (p1802 = 0, 1, 2, 5, 6), the modulation depth must be limited using p1803 (default p1803 < 100 %). The higher the overmodulation, the greater the current ripple and torque ripple.

When changing p1802[x], the values for all of the other existing indices are also changed.

p1802 = 7, 8 should be used if the drive is operated below 100 Hz or 60 Hz, and it is necessary to avoid changing over to edge modulation. Above these output frequencies, the modulation depth remains limited so that there the full output voltage of the edge modulation is not reached.

p1803[0...n] Maximum modulation depth / Modulat depth max

VECTOR_G	**Can be changed:** U, T	**Calculated:** CALC_MOD_LIM_REF	**Access level:** 3
	Data type: FloatingPoint32	**Dynamic index:** DDS, p0180	**Func. diagram:** 6723
	P-Group: Modulation	**Units group:** -	**Unit selection:** -
	Not for motor type: -	**Scaling:** -	**Expert list:** 1
	Min 20.0 [%]	**Max** 150.0 [%]	**Factory setting** 100.0 [%]

Description: Defines the maximum modulation depth.

Note: p1803 = 100% is the overcontrol limit for space vector modulation (for an ideal drive converter without any switching delay).

If an optimized pulse pattern is enabled (edge modulation), then the modulation depth is limited to below the output frequency of 28 Hz as there is no optimized pulse pattern in this range.

p1804[0...n] Filter time constant smoothed modulation index / T_filt mod_idxSmth

VECTOR_G	**Can be changed:** U, T	**Calculated:** -	**Access level:** 4
	Data type: FloatingPoint32	**Dynamic index:** DDS, p0180	**Func. diagram:** -
	P-Group: Modulation	**Units group:** -	**Unit selection:** -
	Not for motor type: -	**Scaling:** -	**Expert list:** 1
	Min 0.0 [ms]	**Max** 10000.0 [ms]	**Factory setting** 10.0 [ms]

Description: Filter time constant for the smoothed modulation index to change over the modulator mode.

p1806[0...n] Filter time constant Vdc correction / T_filt Vdc_corr

VECTOR_G	**Can be changed:** U, T	**Calculated:** CALC_MOD_REG	**Access level:** 4
	Data type: FloatingPoint32	**Dynamic index:** DDS, p0180	**Func. diagram:** -
	P-Group: Closed-loop control	**Units group:** -	**Unit selection:** -
	Not for motor type: -	**Scaling:** -	**Expert list:** 1
	Min 0.0 [ms]	**Max** 10000.0 [ms]	**Factory setting** 0.0 [ms]

Description: Sets the filter time constant of the DC link voltage used to calculate the modulation depth.

r1807 Actual DC link voltage to calculate the modulation depth / VdcActValMod_depth

VECTOR_G	**Can be changed:** -	**Calculated:** -	**Access level:** 4
	Data type: FloatingPoint32	**Dynamic index:** -	**Func. diagram:** -
	P-Group: Displays, signals	**Units group:** 5_2	**Unit selection:** p0505
	Not for motor type: -	**Scaling:** p2001	**Expert list:** 1
	Min - [V]	**Max** - [V]	**Factory setting** - [V]

Description: DC link voltage that is used to convert the setpoint voltage into an equivalent modulation depth.

© Siemens AG 2012 All Rights Reserved

r1808 DC link voltage actual value for U_max calculation / Vdc act val U_max

VECTOR_G

Can be changed: -	**Calculated:** -	**Access level:** 4
Data type: FloatingPoint32	**Dynamic index:** -	**Func. diagram:** -
P-Group: Displays, signals	**Units group:** 5_2	**Unit selection:** p0505
Not for motor type: -	**Scaling:** p2001	**Expert list:** 1
Min	**Max**	**Factory setting**
- [V]	- [V]	- [V]

Description: DC link voltage used to determine the maximum possible output voltage.

r1809 CO: Modulator mode actual / Modulator mode act

VECTOR_G

Can be changed: -	**Calculated:** -	**Access level:** 4
Data type: Integer16	**Dynamic index:** -	**Func. diagram:** -
P-Group: Modulation	**Units group:** -	**Unit selection:** -
Not for motor type: -	**Scaling:** -	**Expert list:** 1
Min	**Max**	**Factory setting**
1	9	-

Description: Displays the effective modulator mode.

Value:

1: Flat top modulation (FLB)
2: Space vector modulation (SVM)
3: Edge modulation from 28 Hz; 23:3
4: Edge modulation from 28 Hz; 19:1
5: Edge modulation from 60 Hz; 17:3
6: Edge modulation from 60 Hz; 17:1
7: Edge modulation from 100 Hz; 9:2
8: Edge modulation from 100 Hz; 9:1
9: Optimized pulse pattern

p1810 Modulator configuration / Modulator config

VECTOR_G

Can be changed: U, T	**Calculated:** -	**Access level:** 3
Data type: Unsigned16	**Dynamic index:** -	**Func. diagram:** -
P-Group: Modulation	**Units group:** -	**Unit selection:** -
Not for motor type: -	**Scaling:** -	**Expert list:** 1
Min	**Max**	**Factory setting**
-	-	0000 0000 0000 0010 bin

Description: Sets the configuration for the modulator.

Bit field:

Bit	Signal name	1 signal	0 signal	FP
00	Avg value filter for U_lim (only for Vdc_comp. in modulator)	Yes	No	-
01	DC link voltage compensation in the current control	Yes	No	-
02	Wobbulation activated	Yes	No	-
03	Current measurement oversampling selected	Yes	No	-
08	Pulse frequency reduction (speed dependent) stage 1	Yes	No	-
09	Pulse frequency reduction (speed dependent) stage 2	Yes	No	-
10	Activate pulse-locking/pulse-dropping function	Pulse-Dropping	Pulse-Locking	-
12	Pulse freq. can be asynchronously set to curr. ctrl clock cycle	Yes	No	-
13	Pulse freq. reduction before optimized pulse patterns for 500 µs	Yes	No	-
14	Deactivate maximum angular difference adaptation	Yes	No	-

Dependency: If bit 2 is set from 1 to 0, p1811 = 0 is set.

© Siemens AG 2012 All Rights Reserved

Notice: Bit 1 = 0 can only be set under a pulse inhibit and for r0192.14 = 1.

Bit 2 can only be set to 1 subject to the following prerequisites:

- Pulse inhibit
- r0192.16 = 1
- p1800 < 2 x 1000/p0115[0]

Bit 12 can only be changed subject to the following prerequisites:

- preconditions, the same as bit 2 = 1
- p1810.3 = 0

Note: Re bit 00 = 0:

Voltage limitation from the minimum of the DC link voltage (lower ripple in the output current, reduced output voltage).

Re bit 00 = 1:

Voltage limitation from averaged DC link voltage (higher output voltage with increased ripple in the output current).

The selection is only valid if the DC link compensation is not performed in the Control Unit (bit 1 = 0).

Re bit 01 = 0:

DC link voltage compensation in the modulator.

Re bit 01 = 1:

DC link voltage compensation in the current control.

Re bit 02 = 0:

A gating unit that does not permit wobbulation is used.

Edge modulation is not possible for a parallel connection with a single-winding system (p7003 = 0).

Bit 02 cannot be set to 0 if bit 12 = 1.

Re bit 02 = 1:

A gating unit that permits wobbulation is used.

For a wobbulation amplitude p1811 = 0, the maximum possible pulse frequency in P1800 = 2 x 1000 / p0115[0].

For a wobbulation amplitude p1811 > 0, the maximum possible pulse frequency in P1800 = 1000 / p0115[0].

If optimized pulse patterns has been activated (p1802 > 6), then a parameter save is required and switch-off and switch-on again. This is displayed using a fault message (F01040).

Re bit 03 = 1:

The actual current value sensing and the determination of the valve ON times takes place with a double current controller clock cycle and phase offset.

The activation is only possible with r0192.23 = 1 and p1810.12 = 0 - and takes effect the next time the system is powered up.

Re bit 08 = 1:

Above the frequency threshold r1836[0], the pulse frequency is switched to the value in p1800. Below r1836[0] (minus the hysteresis), the pulse frequency is reduced to the next possible pulse frequency (see r0114).

Re bit 09 = 1:

Above the frequency threshold r1836[1], the pulse frequency is increased to the next possible value. Below r1836[1] (minus the hysteresis), the pulse frequency is reduced to the next possible pulse frequency.

If bit 8 is set to 0, bit 9 is automatically reset.

Re bit 10 = 0:

Pulse-locking function activated.

Re bit 10 = 1:

Pulse-dropping function activated.

Re bit 12 = 0:

The pulse frequency p1800 can also be synchronously set to the current controller clock cycle (see r0114).

Bit 12 can only be set from 1 to 0 if the pulse frequency p1800 is set synchronously to the current controller clock cycle. In this case, the gating unit is not switched over.

Re bit 12 = 1:

The pulse frequency p1800 can also be asynchronously set to the current controller clock cycle. In this case, the effects should be observed (see p1800).

If bit 12 is set to 1, then the gating unit is automatically switched over (p1810.2 = 1). If this is not possible (see above), then bit 12 cannot be set to 1.

Bit 12 cannot be set to 1, if p1810.3 = 1 is set.

© Siemens AG 2012 All Rights Reserved

p1811[0...n] Pulse frequency wobbulation amplitude / Puls wobb ampl

VECTOR_G

Can be changed: U, T	**Calculated:** -	**Access level:** 3
Data type: FloatingPoint32	**Dynamic index:** DDS, p0180	**Func. diagram:** -
P-Group: Modulation	**Units group:** -	**Unit selection:** -
Not for motor type: -	**Scaling:** -	**Expert list:** 1
Min	**Max**	**Factory setting**
0 [%]	20 [%]	0 [%]

Description: Sets the amplitude of the statistical wobbulation signal.
This signal is used to vary the pulse frequency to create a more pleasant sound.

Note: p1811 > 0 is possible, if the following applies:
- configuration: p1810.2 = 1 (wobbulation activated)
- pulse frequency: p1800 <= 1000 / p115[0]
- output filter, filter type: p0230 < 3 (no sine-wave filter)

p1812 BI: Offset calibration output current measurement / Off_calibr I_outp

VECTOR_G

Can be changed: T	**Calculated:** -	**Access level:** 4
Data type: Unsigned32 / Binary	**Dynamic index:** -	**Func. diagram:** -
P-Group: Modulation	**Units group:** -	**Unit selection:** -
Not for motor type: -	**Scaling:** -	**Expert list:** 1
Min	**Max**	**Factory setting**
-	-	1

Description: Sets the signal source to activate/de-activate offset calibration for output current measurement.

Caution: The absence of offset calibration can have a negative effect on control properties. Offset calibration must be performed before switching on the power unit for the first time after POWER ON.

Note: Offset calibration is only performed with pulses suppressed and can take up to one second.

p1815 Phase for PWM generation subgroup / Ph for PWM subgr

VECTOR_G

Can be changed: U, T	**Calculated:** -	**Access level:** 3
Data type: Unsigned16	**Dynamic index:** -	**Func. diagram:** -
P-Group: Modulation	**Units group:** -	**Unit selection:** -
Not for motor type: -	**Scaling:** -	**Expert list:** 1
Min	**Max**	**Factory setting**
-	-	0001 bin

Description: Sets bit 0 for recording the power unit in the subgroup for the "offset clocking".

Bit field:

Bit	Signal name	1 signal	0 signal	FP
00	Recording in subgroup for offset clocking	Yes	No	-

Dependency: Refer to: p1818, p1819

Note: A change only becomes effective after booting.
If one of the following secondary conditions is not fulfilled, then none of the power units from the subgroup are clocked with an offset.
Secondary conditions for clocking with an offset:
- the PWM frequency (p1800[D]) of all power units in the subgroup must be the same.
- the PWM frequency (p1800[D]) must be the same in all drive data sets in the subgroup.
- the following must apply for the ratio between the PWM cycle (1/p1800[D]) and the current controller cycle (p0115[0]):

The ratio (1/p1800[D]) / (p0115[0]) must be an even integer number (2, 4, 6, ...) for all power units in the subgroup.
or
The ratio (p0115[0]) / (1/p1800[D]) must be an integer number (1, 2, 3, ...) for all power units in the subgroup.

© Siemens AG 2012 All Rights Reserved

p1816 Set phase for PWM generation manually / Set Ph for PWM

VECTOR_G	**Can be changed:** U, T	**Calculated:** -	**Access level:** 3
	Data type: Integer16	**Dynamic index:** -	**Func. diagram:** -
	P-Group: Modulation	**Units group:** -	**Unit selection:** -
	Not for motor type: -	**Scaling:** -	**Expert list:** 1
	Min	**Max**	**Factory setting**
	-1	16	-1

Description: Sets manual setting and overwriting of automatically determined phase shift for "offset clocking".
For p1816 = -1, the following applies:
Automatic mode. The phase shift value is automatically determined.
For p1816 = 0 ... 16, the following applies:
Manual mode. The user should define the phase shift value as follows:
1. PWM cycle (1/p1800) > current controller clock cycle (p0115[0])
The power unit executes a phase shift from Tshift = current controller cycle (p0115[0]) * p1816.
2. PWM cycle (1/p1800) <= current controller clock cycle (p0115[0])
For p1816 >= 1, the power unit executes a phase shift from Tshift = PWM cycle/2.

Dependency: Refer to: r0116, p1800, p1819

p1817 Minimum ratio, pulse frequency to the output frequency / Min f_puls / f_max

VECTOR_G	**Can be changed:** C2(2)	**Calculated:** -	**Access level:** 4
	Data type: FloatingPoint32	**Dynamic index:** -	**Func. diagram:** -
	P-Group: Converter	**Units group:** -	**Unit selection:** -
	Not for motor type: -	**Scaling:** -	**Expert list:** 1
	Min	**Max**	**Factory setting**
	8.3	15.0	12.0

Description: Sets the minimum ratio between the pulse frequency and the output frequency.

Notice: If the ratio between the pulse frequency and the output frequency is reduced, then oscillations can occur in the output current that can result in significant levels of current ripple with the appropriate negative effects.

Note: When the maximum speed is changed, the pulse frequency p1800 is automatically limited to this minimum ratio. It is not permissible to reduce the pulse frequency if this would result in this ratio being undershot.

p1818 Phase for PWM generation configuration / Ph for PWM config

CU_G130_DP, CU_G130_PN, CU_G150_DP, CU_G150_PN	**Can be changed:** T	**Calculated:** -	**Access level:** 3
	Data type: Integer16	**Dynamic index:** -	**Func. diagram:** -
	P-Group: Modulation	**Units group:** -	**Unit selection:** -
	Not for motor type: -	**Scaling:** -	**Expert list:** 1
	Min	**Max**	**Factory setting**
	0	1	1

Description: Sets the phase shift for offset clocking.
For the first active power unit, it is specified whether clocking is to start at 0° (value = 0) or 180° (value = 1). All other active power units are clocked alternately according to the setting made here.

Dependency: Refer to: p1819

Note: A change only becomes effective after a POWER ON.
The parameter is not influenced by setting the factory setting.

© Siemens AG 2012 All Rights Reserved

p1819 Phase for PWM generation / Ph for PWM

VECTOR_G

Can be changed: U, T	**Calculated:** -	**Access level:** 3
Data type: Integer16	**Dynamic index:** -	**Func. diagram:** -
P-Group: Modulation	**Units group:** -	**Unit selection:** -
Not for motor type: -	**Scaling:** -	**Expert list:** 1
Min	**Max**	**Factory setting**
-1	16	-1

Description:

Display for "offset clocking".

Depending on the particular case, the value is interpreted differently:

Case 1:

The PWM clock cycle (1/p1800[D]) is greater than the current controller clock cycle (p115[0]) and the ratio between the PWM clock cycle and the current controller clock cycle and is an integer and even multiple of it (e.g. p0115[0] = 125 µs, p1800[D] = 4 kHz, 2 kHz, 1 kHz).

The value displayed refers to:

- the phase shift in the current-controller cycles to be applied by the power unit.

Case 2:

The PWM clock cycle (1/p1800[D]) is less than or equal to the current controller clock cycle (p0115[0]) and the ratio between the current controller clock cycle and the PWM clock cycle is an integer and even multiple of it (e.g. p0115[0] = 125 µs, p1800[D] = 8 kHz, 16 kHz).

The value 1 displayed means that:

- the power unit is to apply a phase shift of 180 ° (from the PWM cycle).

A value of 0 displayed on all power units of the drive line-up means the following:

- the general conditions of the "offset clocking" (see p1815) are not fulfilled, i.e. no power unit is clocked with an offset.

Dependency:

Refer to: p0108, r0108, p0115, p1800, p1815, p1816, p1818

Note:

For reasons of compatibility, the parameter is an adjustable parameter. However, it functions solely as a display parameter. This means that factory setting -1 no longer has any significance and is only available for reasons of compatibility.

p1820[0...n] Reverse the output phase sequence / Outp_ph_seq rev

VECTOR_G

Can be changed: C2(3)	**Calculated:** -	**Access level:** 3
Data type: Integer16	**Dynamic index:** DDS, p0180	**Func. diagram:** 6732
P-Group: Motor	**Units group:** -	**Unit selection:** -
Not for motor type: -	**Scaling:** -	**Expert list:** 1
Min	**Max**	**Factory setting**
0	1	0

Description:

Sets the phase sequence reversal for the motor.

If the motor does not rotate in the required direction, then the output phase sequence can be reversed using this parameter. This means that with the same setpoint, the motor direction is reversed without reversing the encoder actual value.

When a speed encoder is being used, it may be necessary to also invert the encoder actual value (p0410).

Value:

0: OFF
1: ON

Dependency:

Refer to: p1821

Caution:

For 12-pulse converters with 30° offset angle for system 2, for a direction of rotation reversal, the phase offset changes by 60° as the sign of the angle offset changes. This can be adapted in p1810.15.

Caution:

Changing the direction using p1820 or p1821 is not recognized by the "Safe Direction without encoder". As a consequence, the limit provided by SDI (Safe Direction) from r9733 no longer functions.

Note:

This setting can only be changed when the pulses are inhibited.

p1821 can be used to reverse the phase sequence and encoder actual value.

© Siemens AG 2012 All Rights Reserved

p1821[0...n] Dir of rot / Dir of rot

VECTOR_G	**Can be changed:** C2(3)	**Calculated:** -	**Access level:** 3
	Data type: Integer16	**Dynamic index:** DDS, p0180	**Func. diagram:** 4704, 4710, 4711, 4715, 5730, 6730, 6731, 6732
	P-Group: Motor	**Units group:** -	**Unit selection:** -
	Not for motor type: -	**Scaling:** -	**Expert list:** 1
	Min	**Max**	**Factory setting**
	0	1	0

Description: Setting to change the direction of rotation.

If the parameter is changed, it reverses the direction of rotation of the motor and the encoder actual value without changing the setpoint.

Value:
0: CW
1: CCW

Dependency: Refer to: F07434

Danger: When using external speed actual values for the speed controller (see p1440), for a direction of rotation change (p1821 = 1), then its polarity must also be changed (e.g. for drive object ENCODER via p0410). Otherwise, a positive coupling can occur in the speed control loop and the drive would then be accelerated up to the speed limit.

Caution: For 12-pulse converters with 30° offset angle for system 2, for a direction of rotation reversal, the phase offset changes by 60° as the sign of the angle offset changes. This can be adapted in p1810.15.

Caution: Changing the direction using p1820 or p1821 is not recognized by the "Safe Direction without encoder". As a consequence, the limit provided by SDI (Safe Direction) from r9733 no longer functions.

Notice: An appropriate fault is output for a drive data set changeover where the direction of rotation changes and the pulses are enabled.

Note: For operation with the phase sequence U/V/W, the direction of rotation is defined when viewing the face side of the motor output shaft.

When changing the direction of rotation, the rotating field direction of the current controller is reversed. The speed actual value (e.g. r0063) is also reversed so that the control sense is kept and internally causing the direction of rotation to be reversed with the same setpoint. Further, the position actual values of the actual encoder are reversed (e.g. r0482[0...2]).

p1820 can be used to reverse the direction of the motor without reversing the encoder actual value.

p1825 Converter valve threshold voltage / Threshold voltage

VECTOR_G	**Can be changed:** U, T	**Calculated:** CALC_MOD_ALL	**Access level:** 3
	Data type: FloatingPoint32	**Dynamic index:** -	**Func. diagram:** -
	P-Group: Modulation	**Units group:** -	**Unit selection:** -
	Not for motor type: -	**Scaling:** -	**Expert list:** 1
	Min	**Max**	**Factory setting**
	0.0 [Vrms]	100.0 [Vrms]	0.6 [Vrms]

Description: Sets the threshold voltage drop of the valves (power semiconductor devices) to be compensated.

Note: The value is automatically calculated in the motor data identification routine.

p1828 Compensation valve lockout time phase U / Comp t_lock ph U

VECTOR_G	**Can be changed:** U, T	**Calculated:** CALC_MOD_ALL	**Access level:** 3
	Data type: FloatingPoint32	**Dynamic index:** -	**Func. diagram:** -
	P-Group: Modulation	**Units group:** -	**Unit selection:** -
	Not for motor type: -	**Scaling:** -	**Expert list:** 1
	Min	**Max**	**Factory setting**
	0.00 [µs]	1000000.00 [µs]	0.00 [µs]

Description: Sets the valve lockout time to compensate for phase U.

Notice: The deadtime compensation is deactivated with p7003 = 2.

© Siemens AG 2012 All Rights Reserved

Note: The value is automatically calculated in the motor data identification routine.
For type PM340 power units, the value is limited to 3.98 µs.

p1829 Compensation valve lockout time phase V / Comp t_lock ph V

VECTOR_G	**Can be changed:** U, T	**Calculated:** CALC_MOD_ALL	**Access level:** 3
	Data type: FloatingPoint32	**Dynamic index:** -	**Func. diagram:** -
	P-Group: Modulation	**Units group:** -	**Unit selection:** -
	Not for motor type: -	**Scaling:** -	**Expert list:** 1
	Min	**Max**	**Factory setting**
	0.00 [µs]	1000000.00 [µs]	0.00 [µs]

Description: Sets the valve lockout time to compensate for phase V.
Notice: The deadtime compensation is deactivated with p7003 = 2.
Note: For type PM340 power units, the value is limited to 3.98 µs.

p1830 Compensation valve lockout time phase W / Comp t_lock ph W

VECTOR_G	**Can be changed:** U, T	**Calculated:** CALC_MOD_ALL	**Access level:** 3
	Data type: FloatingPoint32	**Dynamic index:** -	**Func. diagram:** -
	P-Group: Modulation	**Units group:** -	**Unit selection:** -
	Not for motor type: -	**Scaling:** -	**Expert list:** 1
	Min	**Max**	**Factory setting**
	0.00 [µs]	1000000.00 [µs]	0.00 [µs]

Description: Sets the valve lockout time to compensate for phase W.
Notice: The deadtime compensation is deactivated with p7003 = 2.
Note: For type PM340 power units, the value is limited to 3.98 µs.

p1832 Dead time compensation current level / t_dead_comp I_lev

VECTOR_G	**Can be changed:** U, T	**Calculated:** CALC_MOD_ALL	**Access level:** 3
	Data type: FloatingPoint32	**Dynamic index:** -	**Func. diagram:** -
	P-Group: Modulation	**Units group:** -	**Unit selection:** -
	Not for motor type: -	**Scaling:** -	**Expert list:** 1
	Min	**Max**	**Factory setting**
	0.0 [Arms]	10000.0 [Arms]	0.0 [Arms]

Description: Sets the current level for the dead time compensation.
Above the current level, the dead time - resulting from the converter switching delays - is compensated by a previously calculated constant value. If the relevant phase current setpoint falls below the absolute value defined by p1832, the corrective value for this phase is continuously reduced.
Dependency: The factory setting of p1832 is automatically set to 0.02 * rated drive converter current (r0207).

p1835[0...1] Pulse frequency reduction switchover frequency shift / f_puls_red f_sw

VECTOR_G (n/M)	**Can be changed:** U, T	**Calculated:** -	**Access level:** 3
	Data type: FloatingPoint32	**Dynamic index:** -	**Func. diagram:** -
	P-Group: Modulation	**Units group:** -	**Unit selection:** -
	Not for motor type: REL, FEM	**Scaling:** -	**Expert list:** 1
	Min	**Max**	**Factory setting**
	0.00 [Hz]	800.00 [Hz]	0.00 [Hz]

Description: Frequency to shift the switchover frequency r1836 for pulse frequency reduction.
The parameter value reduces the switchover frequency threshold with the same parameter index.
Index: [0] = Frequency limit 1
[1] = Frequency limit 2
Dependency: Refer to: r1836

© Siemens AG 2012 All Rights Reserved

r1836[0...1] Pulse frequency reduction, switchover frequency / f_puls_red f_sw

VECTOR_G (n/M)

Can be changed: -	**Calculated:** -	**Access level:** 3
Data type: FloatingPoint32	**Dynamic index:** -	**Func. diagram:** -
P-Group: Modulation	**Units group:** -	**Unit selection:** -
Not for motor type: REL, FEM	**Scaling:** -	**Expert list:** 1
Min	**Max**	**Factory setting**
- [Hz]	- [Hz]	- [Hz]

Description: Displays the frequency limits, under which the pulse frequency is automatically reduced.

Starting from the parameterized pulse frequency p1800, the pulse frequency is reduced to the next possible one, if the frequency limits and an additional hysteresis are fallen below.

Index 0: Frequency limit for the first pulse frequence reduction (active for p1810.8 = 1)

Index 1: Frequency limit for the second pulse frequence reduction (active for p1810.9 = 1)

Index: [0] = Frequency limit 1
[1] = Frequency limit 2

Dependency: Refer to: p1810, p1835

Note: The pulse frequency reduction is not active for U/f control.

A minimum clearance of 10 Hz is kept between the frequency thresholds, which cannot be fallen below when changing p1835.

r1837 Gating unit configuration / Gating unit config

VECTOR_G

Can be changed: -	**Calculated:** -	**Access level:** 3
Data type: Unsigned32	**Dynamic index:** -	**Func. diagram:** -
P-Group: Modulation	**Units group:** -	**Unit selection:** -
Not for motor type: -	**Scaling:** -	**Expert list:** 1
Min	**Max**	**Factory setting**
-	-	-

Description: Display for the configuration of the gating unit driver.

Bit field:

Bit	Signal name	1 signal	0 signal	FP
00	Modulation depth for a flying restart	Limited	Not limited	-
01	Modulation depth for Vdc closed-loop control	Limited	Not limited	-
02	Vdc_min controller	Active	Not active	-
03	Motor data identification routine	Active	Not active	-
04	Current offset calculation	Active	Not active	-
05	Simulation mode	Active	Not active	-
06	Reverse the output phase sequence	Active	Not active	-
07	CCW dir of rot	Active	Not active	-
08	Synchronization (bypass)	Active	Not active	-
09	F07801 monitor by application	Active	Not active	-
10	Chassis Drive active	Yes	No	-
11	Short-circuit test active	No	Yes	-
12	FL modulation prohibited	Yes	No	-
13	F3E present	Yes	No	-
14	PS-ASIC3 available (PS-ASIC3+ is not a PS-Asic3)	Yes	No	-
15	Power unit with PS interface	Yes	No	-
16	Current measurement oversampling active	Yes	No	-
17	Actual value averaging temporarily suppressed	Yes	No	-
18	Modulation depth limiting	Yes	No	-
19	Reduced DC link capacitance (without F3E)	Yes	No	-

© Siemens AG 2012 All Rights Reserved

p1840[0...n] Actual value correction configuration / ActVal_corr conf

VECTOR_G

Can be changed: T	**Calculated:** -	**Access level:** 3
Data type: Unsigned16	**Dynamic index:** DDS, p0180	**Func. diagram:** -
P-Group: Modulation	**Units group:** -	**Unit selection:** -
Not for motor type: -	**Scaling:** -	**Expert list:** 1
Min	**Max**	**Factory setting**
-	-	0000 bin

Description: Sets the configuration of the actual value correction.

Bit field:

Bit	Signal name	1 signal	0 signal	FP
00	Actual value correction de-activated	Yes	No	-
01	Compares the integrals from modulator and setpoint	Yes	No	-

Dependency: Refer to: p1802

Note: During operation (pulses enabled) the configuration cannot be changed by changing over drive data sets.

r1841 Actual value correction status word / ActVal_corr status

VECTOR_G

Can be changed: -	**Calculated:** -	**Access level:** 4
Data type: Unsigned16	**Dynamic index:** -	**Func. diagram:** -
P-Group: Modulation	**Units group:** -	**Unit selection:** -
Not for motor type: -	**Scaling:** -	**Expert list:** 1
Min	**Max**	**Factory setting**
-	-	-

Description: Displays the status of actual value correction.

Bit field:

Bit	Signal name	1 signal	0 signal	FP
00	Hardware for the actual value correction detected	Yes	No	-
01	Automatic shutdown (too many switching instants)	Yes	No	-
02	Integral scaled to half the gating unit clock cycle freq.	Yes	No	-
03	Actual value correction temporarily suppressed	Yes	No	-
14	Reserved	Yes	No	-
15	Actual value correction active	Yes	No	-

p1845[0...n] Actual value correction evaluation factor Lsig / ActVal_cor ev Lsig

VECTOR_G

Can be changed: U, T	**Calculated:** -	**Access level:** 4
Data type: FloatingPoint32	**Dynamic index:** DDS, p0180	**Func. diagram:** -
P-Group: Modulation	**Units group:** -	**Unit selection:** -
Not for motor type: -	**Scaling:** -	**Expert list:** 1
Min	**Max**	**Factory setting**
0.00	10.00	1.00

Description: Sets the weighting factor for the leakage inductance of the L-R element of the actual value correction.

Dependency: Refer to: p0391, p0392, p0393

Note: The load-dependent adaptation of the leakage inductance of the current actual value correction is defined using p0391 ... p0393.

© Siemens AG 2012 All Rights Reserved

p1846[0...n] Actual value correction damping factor / ActV_corr D_factor

VECTOR_G

Can be changed: U, T	**Calculated:** -	**Access level:** 4
Data type: FloatingPoint32	**Dynamic index:** DDS, p0180	**Func. diagram:** -
P-Group: Modulation	**Units group:** -	**Unit selection:** -
Not for motor type: -	**Scaling:** -	**Expert list:** 1
Min	**Max**	**Factory setting**
0.00	10.00	1.00

Description: Sets the damping factor for the actual value correction.
The factor multiplies the T0/Tsig ratio in the feedback branch of the LR element.

r1848[0...5] Actual value correction phase currents / ActVal_corr I_ph

VECTOR_G

Can be changed: -	**Calculated:** -	**Access level:** 4
Data type: FloatingPoint32	**Dynamic index:** -	**Func. diagram:** -
P-Group: Modulation	**Units group:** -	**Unit selection:** -
Not for motor type: -	**Scaling:** -	**Expert list:** 1
Min	**Max**	**Factory setting**
-	-	-

Description: Displays phase correction currents as well as the drive converter phase currents

Index:
[0] = Harmonics, phase U
[1] = Harmonics, phase V
[2] = Harmonics, phase W
[3] = Meas val phase U
[4] = Meas val phase V
[5] = Meas val phase W

r1849[0...5] Actual value correction phase voltages / ActVal_corr U_ph

VECTOR_G

Can be changed: -	**Calculated:** -	**Access level:** 4
Data type: FloatingPoint32	**Dynamic index:** -	**Func. diagram:** -
P-Group: Modulation	**Units group:** -	**Unit selection:** -
Not for motor type: -	**Scaling:** -	**Expert list:** 1
Min	**Max**	**Factory setting**
-	-	-

Description: Displays the phase correction voltages and and the drive converter phase voltages

Index:
[0] = Harmonics, phase U
[1] = Harmonics, phase V
[2] = Harmonics, phase W
[3] = Meas val phase U
[4] = Meas val phase V
[5] = Meas val phase W

p1900 Motor data identification and rotating measurement / MotID and rot meas

VECTOR_G

Can be changed: C2(1), T	**Calculated:** -	**Access level:** 1
Data type: Integer16	**Dynamic index:** -	**Func. diagram:** -
P-Group: Motor identification	**Units group:** -	**Unit selection:** -
Not for motor type: -	**Scaling:** -	**Expert list:** 1
Min	**Max**	**Factory setting**
0	2	2

Description: Sets the motor data identification and speed controller optimization.
p1900 = 0:
Function inhibited.
p1900 = 2:
Induction motors --> set p1910 = 1 and p1960 = 0
Permanent-magnet or separately-excited synchronous motors --> set p1910 = 1, p1990 = 1 and p1960 = 0

© Siemens AG 2012 All Rights Reserved

When the drive enable signals are present, a motor data identification routine is carried out at standstill with the next power-on command. Current flows through the motor which means that it can align itself by up to a quarter of a revolution.

For permanent-magnet or separately-excited synchronous motors, the encoder is adjusted with the next power-on command. The motor must be free to rotate and rotates through 1.5 revolutions of the motor encoder.

Value:
0: Inhibited
2: Identify motor data at standstill

Dependency: In the simulation mode, the parameter cannot be written into. When selecting the motor data identification routine, the drive data set changeover is suppressed.

Refer to: p1272, p1300, p1910

Refer to: F07990, A07991

Notice: If there is a motor holding brake, it must be open (p1215 = 2).

To permanently accept the determined settings they must be saved in a non-volatile fashion (p0971, p0977).

It is not permissible to activate write protection during the motor identification (p7761).

Note: The motor and control parameters are only optimally set when both measurements are carried out (initially at standstill, and then with the motor rotating).

An appropriate alarm is output when the parameter is set.

The power-on command must remain set during a measurement and after the measurement has been completed, the drive automatically resets it.

The duration of the measurements can lie between 0.3 s and several minutes. This time is, for example, influenced by the motor size and the mechanical conditions.

p1900 is automatically set to 0 after the motor data identification routine has been completed.

p1900 Motor data identification and rotating measurement / MotID and rot meas

VECTOR_G (n/M)

Can be changed: C2(1), T	**Calculated:** -	**Access level:** 1
Data type: Integer16	**Dynamic index:** -	**Func. diagram:** -
P-Group: Motor identification	**Units group:** -	**Unit selection:** -
Not for motor type: -	**Scaling:** -	**Expert list:** 1
Min	**Max**	**Factory setting**
0	3	2

Description: Sets the motor data identification and speed controller optimization.

The motor identification should first be performed with the motor stationary (p1900 = 1, 2; also refer to p1910). Based on this, additional motor and control parameters can be determined using the motor data identification with the motor rotating (p1900 = 1, 3; also refer to p1960).

p1900 = 0:

Function inhibited.

p1900 = 1:

Induction motors --> set p1910 = 1 and p1960 = 0, 1, 2 depending on p1300

Permanent-magnet or separately-excited synchronous motors --> set p1910 = 1, p1990 = 1 and p1960 = 0, 1, 2 depending on p1300

When the drive enable signals are present, a motor data identification routine is carried out at standstill with the next power-on command. Current flows through the motor which means that it can align itself by up to a quarter of a revolution.

For permanent-magnet or separately-excited synchronous motors, the encoder is adjusted with the next power-on command. The motor must be free to rotate and rotates through 1.5 revolutions of the motor encoder.

With the following power-on command, a rotating motor data identification routine is carried out - and in addition, a speed controller optimization by making measurements at different motor speeds.

p1900 = 2:

Induction motors --> set p1910 = 1 and p1960 = 0

Permanent-magnet or separately-excited synchronous motors --> set p1910 = 1, p1990 = 1 and p1960 = 0

When the drive enable signals are present, a motor data identification routine is carried out at standstill with the next power-on command. Current flows through the motor which means that it can align itself by up to a quarter of a revolution.

For permanent-magnet or separately-excited synchronous motors, the encoder is adjusted with the next power-on command. The motor must be free to rotate and rotates through 1.5 revolutions of the motor encoder.

© Siemens AG 2012 All Rights Reserved

p1900 = 3:

Sets p1960 = 0, 1, 2 depending on p1300

This setting should only be selected if the motor data identification was already carried out at standstill.

When the drive enable signals are present, with the next power-on command, a rotating motor data identification routine is carried out - and in addition, speed controller optimization by taking measurements at different motor speeds.

Value:
0: Inhibited
1: Identify motor data at standstill and with motor rotating
2: Identify motor data at standstill
3: Identify motor data with motor rotating

Dependency: In the simulation mode, the parameter cannot be written into. When selecting the motor data identification routine, the drive data set changeover is suppressed.

Refer to: p1272, p1300, p1910, p1960, p1990

Refer to: A07980, A07981, F07982, F07983, F07984, F07985, F07986, A07987, F07988, F07990, A07991

Notice: If there is a motor holding brake, it must be open (p1215 = 2).

To permanently accept the determined settings they must be saved in a non-volatile fashion (p0971, p0977).

It is not permissible to activate write protection during the motor identification (p7761).

p1900 = 3:

This setting should only be selected if the motor data identification was already carried out at standstill.

Note: The motor and control parameters are only optimally set when both measurements are carried out (initially at standstill, and then with the motor rotating).

An appropriate alarm is output when the parameter is set.

The power-on command must remain set during a measurement and after the measurement has been completed, the drive automatically resets it.

The duration of the measurements can lie between 0.3 s and several minutes. This time is, for example, influenced by the motor size and the mechanical conditions.

p1900 is automatically set to 0 after the motor data identification routine has been completed.

p1901 Test pulse evaluation configuration / Test puls config

VECTOR_G

Can be changed: T	**Calculated:** CALC_MOD_ALL	**Access level:** 2
Data type: Unsigned32	**Dynamic index:** -	**Func. diagram:** -
P-Group: Motor identification	**Units group:** -	**Unit selection:** -
Not for motor type: -	**Scaling:** -	**Expert list:** 1
Min	**Max**	**Factory setting**
-	-	0000 bin

Description: Sets the configuration for the test pulse evaluation.

Bit 00: Check for conductor-to-conductor short circuit once/always when the pulses are enabled.

Bit 01: Check for ground fault once/always when the pulses are enabled.

Bit 02: Activation of the tests selected using bit 00 and/or bit 01 each time the pulses are enabled

Bit field:

Bit	Signal name	1 signal	0 signal	FP
00	Phase short-circuit test pulse active	Yes	No	-
01	Ground fault detection test pulse active	Yes	No	-
02	Test pulse at each pulse enable	Yes	No	-

Dependency: Refer to: p0287

Note: Re bit 02=0:

If the test was successful once after POWER ON (see r1902.0), it is not repeated.

Re bit 02=1:

The test is not only performed after POWER ON, but also each time the pulses are enabled.

If a conductor-to-conductor short-circuit is detected during the test, this is displayed in r1902.1.

If a ground fault is detected during the test, this is displayed in r1902.2.

© Siemens AG 2012 All Rights Reserved

r1902 Test pulse evaluation status / Test puls ev stat

VECTOR_G

Can be changed: -	**Calculated:** -	**Access level:** 2
Data type: Unsigned32	**Dynamic index:** -	**Func. diagram:** -
P-Group: -	**Units group:** -	**Unit selection:** -
Not for motor type: -	**Scaling:** -	**Expert list:** 1
Min	**Max**	**Factory setting**
-	-	-

Description:

Displays the status of the test pulse evaluation.

Short-circuit test:

Bit 0: The short-circuit test was executed without any fault.

Bit 1: A phase short circuit has been detected.

Bit 2: A ground fault test was successfully performed.

Bit 3: A ground fault was detected.

Bit 4: A test pulse longer than one sampling time has occurred

Bit field:

Bit	Signal name	1 signal	0 signal	FP
00	Short-circuit test executed	Yes	No	-
01	Phase short-circuit detected	Yes	No	-
02	Ground fault test successfully performed	Yes	No	-
03	Ground fault detected	Yes	No	-
04	Identification pulse width greater than the minimum pulse width	Yes	No	-

Note:

If the ground fault test was selected, but not successfully performed, then sufficient current will not be able to be established during the test pulse.

p1905 Parameter tuning selection / Par tune select

VECTOR_G (n/M)

Can be changed: C2(1), T	**Calculated:** -	**Access level:** 1
Data type: Integer16	**Dynamic index:** -	**Func. diagram:** -
P-Group: Motor identification	**Units group:** -	**Unit selection:** -
Not for motor type: -	**Scaling:** -	**Expert list:** 1
Min	**Max**	**Factory setting**
0	90	0

Description:

The fine encoder calibration (TUNE_ENC_FINE) should be started during the first commissioning or after the encoder is replaced.

The fine calibration starts when the pulses are enabled and performs a rotating measurement (approximately 1 minute). In this case, a setpoint speed of at least 40 % of the motor rated speed must be entered, and the torque must be less than half of the motor rated torque.

The phases of the fine calibration of displayed using alarm A07976. The fine calibration ends with the calculation of p0431 for the following pulse inhibit. p1905 is automatically set to 0 at the end of the fine calibration.

Value:

0: Inactive
90: Encoder fine tuning

Dependency:

If the motor encoder adjustment has not been performed (p3925, bit 4 = 0) or the encoder calibration is activated (p1990 != 0), then encoder fine calibration is prevented.

Refer to: p1272, p1910, p1960, p1990

Refer to: A07976

Caution:

During encoder fine calibration, the motor must be operated without a load - and if a motor holding brake is being used, this must be opened.

Notice:

For p1905 = 90 and with the pulses not enabled, the function is only executed the next time that the pulses are enabled. When selecting the encoder fine calibration, the changeover of the motor data sets is suppressed.

© Siemens AG 2012 All Rights Reserved

p1909[0...n] Motor data identification control word / MotID STW

VECTOR_G

Can be changed: T	**Calculated:** CALC_MOD_ALL	**Access level:** 3
Data type: Unsigned32	**Dynamic index:** MDS, p0130	**Func. diagram:** -
P-Group: Motor identification	**Units group:** -	**Unit selection:** -
Not for motor type: -	**Scaling:** -	**Expert list:** 1
Min	**Max**	**Factory setting**
-	-	0000 0000 0000 0000 0000 0000 0000 0000 bin

Description: Sets the configuration for the motor data identification.

Bit field:

Bit	Signal name	1 signal	0 signal	FP
00	Stator inductance estimate no measurement	Yes	No	-
01	Cl.-loop current control w/ dead-beat controller	Yes	No	-
02	Rotor time constant estimate no measurement	Yes	No	-
03	Leakage inductance estimate no measurement	Yes	No	-
04	Activates the identification dynamic leakage inductance	Yes	No	-
05	Determine Tr and Lsig evaluation in the time range	Yes	No	-
06	Activate vibration damping	Yes	No	-
07	De-activate vibration detection	Yes	No	-
11	De-activate pulse measurement Lq Ld	Yes	No	-
12	De-activate rotor resistance Rr measurement	Yes	No	-
14	De-activate valve interlocking time measurement	Yes	No	-
15	Determine only stator resistance, valve voltage fault, dead time	Yes	No	-
16	Short motor identification (lower quality)	Yes	No	-

Note: The following applies to permanent-magnet synchronous motors:

Without de-selection in bit 11, in the closed-loop control mode, the direct inductance LD and the quadrature inductance Lq are measured at a low current.

When de-selecting with bit 11 or in the U/f mode, the stator inductance is measured at half the rated motor current.

If the stator is inductance is not measured but is to be estimated, then bit 0 should be set and bit 11 should be de-selected.

p1910 Motor data identification selection / MotID selection

VECTOR_G

Can be changed: T	**Calculated:** -	**Access level:** 2
Data type: Integer16	**Dynamic index:** -	**Func. diagram:** -
P-Group: Motor identification	**Units group:** -	**Unit selection:** -
Not for motor type: -	**Scaling:** -	**Expert list:** 1
Min	**Max**	**Factory setting**
0	26	1

Description: Sets the motor data identification routine.

The motor data identification routine is carried out after the next power-on command.

p1910 = 1:

All motor data and the drive converter characteristics are identified and then transferred to the following parameters:

p0350, p0354, p0356, p0357, p0358, p0360, p1825, p1828, p1829, p1830

After this, the control parameter p0340 = 3 is automatically calculated.

Value:
0: Inhibited
1: Complete identification (ID) and acceptance of motor data
2: Complete identification (ID) of motor data without acceptance

© Siemens AG 2012 All Rights Reserved

3: ID of the saturation characteristic and acceptance
4: ID of the saturation characteristic without acceptance
5: ID of dynamic leakage inductance Lsig (r1920) without acceptance
6: ID of lockout time (r1926) without acceptance
7: ID of stator resistance Rs (r1912) without acceptance
8: ID of stator inductance Ls (r1915) Rr (r1927) without acceptance
9: ID of rotor time constant Tr (r1913) without acceptance
10: ID of static leakage inductance Lsig (r1914) without acceptance
20: Voltage vector input
21: Voltage vector input without filter
22: Rectangular voltage vector input without filter
23: Triangular voltage vector input without filter
24: Rectangular voltage vector input with filter
25: Triangular voltage vector input with filter
26: Enter voltage vector with DTC correction

Dependency: "Quick commissioning" must be carried out (p0010 = 1) before executing the motor data identification routine!

In the simulation mode, the parameter cannot be written into. When selecting the motor data identification routine, the drive data set changeover is suppressed.

Refer to: p1272, p1900

Caution: After the motor data identification (p1910 > 0) has been selected, alarm A07991 is output and a motor data identification routine is carried out as follows at the next power-on command:

- current flows through the motor and a voltage is present at the drive converter output terminals.
- during the identification routine, the motor shaft can rotate through a maximum of half a revolution.
- however, no torque torque is generated.

Notice: If there is a motor holding brake, it must be open (p1215 = 2).

To permanently accept the determined settings they must be saved in a non-volatile fashion (p0971, p0977).

Note: When setting p1910, the following should be observed:

1. "With acceptance" means:

The parameters specified in the description are overwritten with the identified values and therefore have an influence on the controller setting.

2. "Without acceptance" means:

The identified parameters are only displayed in the range r1912 ... r1926. The controller settings remain unchanged.

3. p1910 = 3, 4, 5 can only be selected for induction motors.

p1911 Number of phases to be identified / Qty ph to ident

VECTOR_G

Can be changed: T	**Calculated:** -	**Access level:** 4
Data type: Integer16	**Dynamic index:** -	**Func. diagram:** -
P-Group: Motor identification	**Units group:** -	**Unit selection:** -
Not for motor type: -	**Scaling:** -	**Expert list:** 1
Min	**Max**	**Factory setting**
1	3	1

Description: Sets the number of phases to be identified.

Value:
1: 1 phase U
2: 2 phases U, V
3: 3 phases U, V, W

Note: When identifying with several phases, the accuracy increases and also the time it takes to make the measurement.

r1912[0...2] Identified stator resistance / R_stator ident

VECTOR_G

Can be changed: -	**Calculated:** -	**Access level:** 4
Data type: FloatingPoint32	**Dynamic index:** -	**Func. diagram:** -
P-Group: Motor identification	**Units group:** -	**Unit selection:** -
Not for motor type: -	**Scaling:** -	**Expert list:** 1
Min	**Max**	**Factory setting**
- [ohm]	- [ohm]	- [ohm]

Description: Displays the identified stator resistance.

© Siemens AG 2012 All Rights Reserved

Index: [0] = Phase U
[1] = Phase V
[2] = Phase W

r1913[0...2] Identified rotor time constant / T_rotor ident

VECTOR_G	**Can be changed:** -	**Calculated:** -	**Access level:** 4
	Data type: FloatingPoint32	**Dynamic index:** -	**Func. diagram:** -
	P-Group: Motor identification	**Units group:** -	**Unit selection:** -
	Not for motor type: PEM	**Scaling:** -	**Expert list:** 1
	Min	**Max**	**Factory setting**
	- [ms]	- [ms]	- [ms]

Description: Displays the identified rotor time constant.

Index: [0] = Phase U
[1] = Phase V
[2] = Phase W

r1914[0...2] Identified total leakage inductance / L_total_leak ident

VECTOR_G	**Can be changed:** -	**Calculated:** -	**Access level:** 4
	Data type: FloatingPoint32	**Dynamic index:** -	**Func. diagram:** -
	P-Group: Motor identification	**Units group:** -	**Unit selection:** -
	Not for motor type: -	**Scaling:** -	**Expert list:** 1
	Min	**Max**	**Factory setting**
	- [mH]	- [mH]	- [mH]

Description: Displays the identified total leakage inductance.

Index: [0] = Phase U
[1] = Phase V
[2] = Phase W

r1915[0...2] Identified nominal stator inductance / L_stator ident

VECTOR_G	**Can be changed:** -	**Calculated:** -	**Access level:** 4
	Data type: FloatingPoint32	**Dynamic index:** -	**Func. diagram:** -
	P-Group: Motor identification	**Units group:** -	**Unit selection:** -
	Not for motor type: -	**Scaling:** -	**Expert list:** 1
	Min	**Max**	**Factory setting**
	- [mH]	- [mH]	- [mH]

Description: Displays the nominal stator inductance identified.

Index: [0] = Phase U
[1] = Phase V
[2] = Phase W

r1916[0...2] Identified stator inductance 1 / L_stator 1 ident

VECTOR_G	**Can be changed:** -	**Calculated:** -	**Access level:** 4
	Data type: FloatingPoint32	**Dynamic index:** -	**Func. diagram:** -
	P-Group: Motor identification	**Units group:** -	**Unit selection:** -
	Not for motor type: -	**Scaling:** -	**Expert list:** 1
	Min	**Max**	**Factory setting**
	- [mH]	- [mH]	- [mH]

Description: Displays the nominal stator inductance identified for the 1st point of the saturation characteristic.

Index: [0] = Phase U
[1] = Phase V
[2] = Phase W

© Siemens AG 2012 All Rights Reserved

r1917[0...2] Identified stator inductance 2 / L_stator 2 ident

VECTOR_G	**Can be changed:** -	**Calculated:** -	**Access level:** 4
	Data type: FloatingPoint32	**Dynamic index:** -	**Func. diagram:** -
	P-Group: Motor identification	**Units group:** -	**Unit selection:** -
	Not for motor type: -	**Scaling:** -	**Expert list:** 1
	Min - [mH]	**Max** - [mH]	**Factory setting** - [mH]

Description: Displays the nominal stator inductance identified for the 2nd point of the saturation characteristic.

Index:
[0] = Phase U
[1] = Phase V
[2] = Phase W

r1918[0...2] Identified stator inductance 3 / L_stator 3 ident

VECTOR_G	**Can be changed:** -	**Calculated:** -	**Access level:** 4
	Data type: FloatingPoint32	**Dynamic index:** -	**Func. diagram:** -
	P-Group: Motor identification	**Units group:** -	**Unit selection:** -
	Not for motor type: -	**Scaling:** -	**Expert list:** 1
	Min - [mH]	**Max** - [mH]	**Factory setting** - [mH]

Description: Displays the nominal stator inductance identified for the 3rd point of the saturation characteristic.

Index:
[0] = Phase U
[1] = Phase V
[2] = Phase W

r1919[0...2] Identified stator inductance 4 / L_stator 4 ident

VECTOR_G	**Can be changed:** -	**Calculated:** -	**Access level:** 4
	Data type: FloatingPoint32	**Dynamic index:** -	**Func. diagram:** -
	P-Group: Motor identification	**Units group:** -	**Unit selection:** -
	Not for motor type: -	**Scaling:** -	**Expert list:** 1
	Min - [mH]	**Max** - [mH]	**Factory setting** - [mH]

Description: Displays the nominal stator inductance identified for the 4th point of the saturation characteristic.

Index:
[0] = Phase U
[1] = Phase V
[2] = Phase W

r1920[0...2] Identified dynamic leakage inductance / L_leak dyn ident

VECTOR_G	**Can be changed:** -	**Calculated:** -	**Access level:** 4
	Data type: FloatingPoint32	**Dynamic index:** -	**Func. diagram:** -
	P-Group: Motor identification	**Units group:** -	**Unit selection:** -
	Not for motor type: -	**Scaling:** -	**Expert list:** 1
	Min - [mH]	**Max** - [mH]	**Factory setting** - [mH]

Description: Displays the identified dynamic total leakage inductance.

Index:
[0] = Phase U
[1] = Phase V
[2] = Phase W

© Siemens AG 2012 All Rights Reserved

r1921[0...2] Identified dynamic leakage inductance 1 / L_leak 1 dyn id

VECTOR_G	**Can be changed:** -	**Calculated:** -	**Access level:** 4
	Data type: FloatingPoint32	**Dynamic index:** -	**Func. diagram:** -
	P-Group: Motor identification	**Units group:** -	**Unit selection:** -
	Not for motor type: -	**Scaling:** -	**Expert list:** 1
	Min - [mH]	**Max** - [mH]	**Factory setting** - [mH]

Description: Displays the identified dynamic leakage inductance 1.

Index:
[0] = Phase U
[1] = Phase V
[2] = Phase W

r1922[0...2] Identified dynamic leakage inductance 2 / L_leak 2 dyn id

VECTOR_G	**Can be changed:** -	**Calculated:** -	**Access level:** 4
	Data type: FloatingPoint32	**Dynamic index:** -	**Func. diagram:** -
	P-Group: Motor identification	**Units group:** -	**Unit selection:** -
	Not for motor type: -	**Scaling:** -	**Expert list:** 1
	Min - [mH]	**Max** - [mH]	**Factory setting** - [mH]

Description: Displays the identified dynamic leakage inductance 2.

Index:
[0] = Phase U
[1] = Phase V
[2] = Phase W

r1923[0...2] Identified dynamic leakage inductance 3 / L_leak 3 dyn id

VECTOR_G	**Can be changed:** -	**Calculated:** -	**Access level:** 4
	Data type: FloatingPoint32	**Dynamic index:** -	**Func. diagram:** -
	P-Group: Motor identification	**Units group:** -	**Unit selection:** -
	Not for motor type: -	**Scaling:** -	**Expert list:** 1
	Min - [mH]	**Max** - [mH]	**Factory setting** - [mH]

Description: Displays the identified dynamic leakage inductance 3.

Index:
[0] = Phase U
[1] = Phase V
[2] = Phase W

r1924[0...2] Identified dynamic leakage inductance 4 / L_leak 4 dyn id

VECTOR_G	**Can be changed:** -	**Calculated:** -	**Access level:** 4
	Data type: FloatingPoint32	**Dynamic index:** -	**Func. diagram:** -
	P-Group: Motor identification	**Units group:** -	**Unit selection:** -
	Not for motor type: -	**Scaling:** -	**Expert list:** 1
	Min - [mH]	**Max** - [mH]	**Factory setting** - [mH]

Description: Displays the identified dynamic leakage inductance 4.

Index:
[0] = Phase U
[1] = Phase V
[2] = Phase W

© Siemens AG 2012 All Rights Reserved

r1925[0...2] Identified threshold voltage / U_threshold ident

VECTOR_G	**Can be changed:** -	**Calculated:** -	**Access level:** 4
	Data type: FloatingPoint32	**Dynamic index:** -	**Func. diagram:** -
	P-Group: Motor identification	**Units group:** -	**Unit selection:** -
	Not for motor type: -	**Scaling:** -	**Expert list:** 1
	Min - [Vrms]	**Max** - [Vrms]	**Factory setting** - [Vrms]

Description: Displays the identified IGBT threshold voltage.

Index:
[0] = Phase U
[1] = Phase V
[2] = Phase W

r1926[0...2] Identified effective valve lockout time / t_lock_valve id

VECTOR_G	**Can be changed:** -	**Calculated:** -	**Access level:** 4
	Data type: FloatingPoint32	**Dynamic index:** -	**Func. diagram:** -
	P-Group: Motor identification	**Units group:** -	**Unit selection:** -
	Not for motor type: -	**Scaling:** -	**Expert list:** 1
	Min - [µs]	**Max** - [µs]	**Factory setting** - [µs]

Description: Displays the identified effective valve lockout time.

Index:
[0] = Phase U
[1] = Phase V
[2] = Phase W

r1927[0...2] Identified rotor resistance / R_rotor ident

VECTOR_G	**Can be changed:** -	**Calculated:** -	**Access level:** 4
	Data type: FloatingPoint32	**Dynamic index:** -	**Func. diagram:** -
	P-Group: Motor identification	**Units group:** -	**Unit selection:** -
	Not for motor type: -	**Scaling:** -	**Expert list:** 1
	Min - [ohm]	**Max** - [ohm]	**Factory setting** - [ohm]

Description: Displays identified rotor resistance (on separately excited synchronous motors: damping resistance).

Index:
[0] = Phase U
[1] = Phase V
[2] = Phase W

r1929[0...2] Identified cable resistance / R_cable ident

VECTOR_G	**Can be changed:** -	**Calculated:** -	**Access level:** 4
	Data type: FloatingPoint32	**Dynamic index:** -	**Func. diagram:** -
	P-Group: Motor identification	**Units group:** -	**Unit selection:** -
	Not for motor type: -	**Scaling:** -	**Expert list:** 1
	Min - [ohm]	**Max** - [ohm]	**Factory setting** - [ohm]

Description: Displays the identified cable resistance.

Index:
[0] = Phase U
[1] = Phase V
[2] = Phase W

© Siemens AG 2012 All Rights Reserved

r1934[0...9] q inductance identified / Lq ident

VECTOR_G (n/M)	**Can be changed:** -	**Calculated:** -	**Access level:** 4
	Data type: FloatingPoint32	**Dynamic index:** -	**Func. diagram:** -
	P-Group: Motor identification	**Units group:** -	**Unit selection:** -
	Not for motor type: -	**Scaling:** -	**Expert list:** 1
	Min - [mH]	**Max** - [mH]	**Factory setting** - [mH]

Description: Displays the identified (differential) q-inductance.

Dependency: Refer to: r1935, p1959, p1960

Note: The Lq characteristic consists of the value pairs from p1934 and p1935 with the same index.
This value corresponds to the value of the total leakage inductance (r0377).

r1935[0...9] q inductance identification current / Lq I_ident

VECTOR_G (n/M)	**Can be changed:** -	**Calculated:** -	**Access level:** 4
	Data type: FloatingPoint32	**Dynamic index:** -	**Func. diagram:** -
	P-Group: Motor identification	**Units group:** -	**Unit selection:** -
	Not for motor type: -	**Scaling:** -	**Expert list:** 1
	Min - [Arms]	**Max** - [Arms]	**Factory setting** - [Arms]

Description: Displays the identification current to identify the q inductance ([0...9]).

Dependency: Refer to: r1934, p1959, p1960

Note: The Lq characteristic consists of the value pairs from r1934 and r1935 with the same index.

p1959[0...n] Rotating measurement configuration / Rot meas config

VECTOR_G (n/M)	**Can be changed:** T	**Calculated:** CALC_MOD_ALL	**Access level:** 2
	Data type: Unsigned16	**Dynamic index:** DDS, p0180	**Func. diagram:** -
	P-Group: Motor identification	**Units group:** -	**Unit selection:** -
	Not for motor type: REL	**Scaling:** -	**Expert list:** 1
	Min -	**Max** -	**Factory setting** 0000 0000 0001 1111 bin

Description: Sets the configuration of the rotating measurement.

Bit field:

Bit	Signal name	1 signal	0 signal	FP
00	Enc test active	Yes	No	-
01	Saturation characteristic identification	Yes	No	-
02	Moment of inertia identification	Yes	No	-
03	Re-calculates the speed controller parameters	Yes	No	-
04	Speed controller optimization (vibration test)	Yes	No	-
05	q leakage inductance ident. (for current controller adaptation)	Yes	No	-
12	Measurement shortened	Yes	No	-

Dependency: Refer to: F07988

Note: The encoder is only tested if the rotating measurement with encoder is selected (p1960 = 2).
The following parameters are influenced for the individual optimization steps:
Bit 00: None
Bit 01: p0320, p0360, p0362 ... p0369
Bit 02: p0341, p0342
Bit 03: p1400.0, p1458, p1459, p1460, p1462, p1463, p1470, p1472, p1496
Bit 04: Dependent on p1960
Bit 05: p0391, p0392, p0393, p1402.2 only for induction motors
p1960 = 1, 3: p1400.0, p1458, p1459, p1470, p1472, p1496

© Siemens AG 2012 All Rights Reserved

p1960 = 2, 4: p1458, p1459, p1460, p1461, p1462, p1463, p1496

The identification of the q leakage inductance can only be carried out for unloaded motors or motors with a low load (load approx. 30% below the rated motor torque). Only then is a current controller adaptation (p0391 ... p0393) parameterized if the q-leakage inductance under no-load conditions is at least 30 % higher than the total leakage inductance (p0356, p0358).

Re bit 12 = 1:

The selection only has an effect on the measurement p1960 = 1, 2. For the shortened measurement, the magnetizing current and moment of inertia are determined with a somewhat lower accuracy.

p1960 Rotating measurement selection / Rot meas sel

VECTOR_G

Can be changed: T	**Calculated:** -	**Access level:** 2
Data type: Integer16	**Dynamic index:** -	**Func. diagram:** -
P-Group: Motor identification	**Units group:** -	**Unit selection:** -
Not for motor type: REL	**Scaling:** -	**Expert list:** 1
Min	**Max**	**Factory setting**
0	4	0

Description:

Sets the rotating measurement.

The rotating measurement is carried out after the next power-on command.

The setting possibilities of the parameter depend on the open-loop/closed-loop control mode (p1300).

p1300 < 20 (U/f open-loop control):

It is not possible to select rotating measurement or speed controller optimization.

p1300 = 20, 22 (encoderless operation):

Only rotating measurement or speed controller optimization can be selected in the encoderless mode.

p1300 = 21, 23 (operation with encoder):

Both versions (encoderless and with encoder) of the rotating measurement and speed controller optimization can be selected.

Value:

0: Inhibited
1: Rotating measurement in encoderless operation
2: Rotating measurement with encoder
3: Speed controller optimization in encoderless operation
4: Speed controller optimization with encoder

Dependency:

Before the rotating measurement is carried out, the motor data identification routine (p1900, p1910, r3925) should have already been done.

In the simulation mode, a value of 1 cannot be written into the parameter.

When selecting the rotating measurement, the drive data set changeover is suppressed.

Refer to: p1272, p1300, p1900, p1959

Refer to: A07987

Danger:

For drives with a mechanical system that limits the distance moved, it must be ensured that this is not reached during the rotating measurement. If this is not the case, then it is not permissible that the measurement is carried out.

Notice:

If there is a motor holding brake, it must be open (p1215 = 2).

To permanently accept the determined settings they must be saved in a non-volatile fashion (p0971, p0977).

Note:

When the rotating measurement is activated, it is not possible to save the parameters (p0971, p0977).

Parameter changes are automatically made for the rotating measurement (e.g. p1120); this is the reason that up to the end of the measurement, and if no faults are present, no manual changes should be made.

The ramp-up and ramp-down times (p1120, p1121) are limited, for the rotating measurement, to 900 s.

For speed controller optimization with encoder (p1960 = 2, 4), the speed controller for encoderless operation is also pre-assigned (p1470, p1472).

Depending on whether the speed controller optimization is carried out with or without encoder, different Kp/Tn adaptations of the speed controller are set (p1464, p1465). If the drive should be controlled with as well as without speed encoder, then we recommend the use of two drive data sets (p0180). These can then be executed with different speed controller adaptations.

© Siemens AG 2012 All Rights Reserved

p1961 Saturation characteristic speed to determine / Sat_char n determ

VECTOR_G (n/M)

Can be changed: U, T	**Calculated:** -	**Access level:** 3
Data type: FloatingPoint32	**Dynamic index:** -	**Func. diagram:** -
P-Group: Motor identification	**Units group:** -	**Unit selection:** -
Not for motor type: REL	**Scaling:** -	**Expert list:** 1
Min	**Max**	**Factory setting**
26 [%]	75 [%]	40 [%]

Description: Sets the speed to determine the saturation characteristic and the encoder test.
The percentage value is referred to p0310 (rated motor frequency).

Dependency: Refer to: p0310, p1959
Refer to: F07983

Note: The saturation characteristics should be determined at an operating point with the lowest possible load.

r1962[0...4] Saturation characteristic magnetizing current / Sat_char I_mag

VECTOR_G (n/M)

Can be changed: -	**Calculated:** -	**Access level:** 4
Data type: FloatingPoint32	**Dynamic index:** -	**Func. diagram:** -
P-Group: Motor identification	**Units group:** -	**Unit selection:** -
Not for motor type: PEM, REL	**Scaling:** -	**Expert list:** 1
Min	**Max**	**Factory setting**
- [%]	- [%]	- [%]

Description: Displays the magnetizing currents of the identified saturation characteristic.
The values are referred to r0331.
After they have been determined, the values are transferred to p0366 ... p0369.

Index: [0] = Value 1
[1] = Value 2
[2] = Value 3
[3] = Value 4
[4] = Value 5

Dependency: Refer to: r0331

r1963[0...4] Saturation characteristic magnetizing inductance / Sat_char L_main

VECTOR_G (n/M)

Can be changed: -	**Calculated:** -	**Access level:** 4
Data type: FloatingPoint32	**Dynamic index:** -	**Func. diagram:** -
P-Group: Motor identification	**Units group:** -	**Unit selection:** -
Not for motor type: PEM, REL	**Scaling:** -	**Expert list:** 1
Min	**Max**	**Factory setting**
- [%]	- [%]	- [%]

Description: Displays the magnetizing inductances of the identified saturation characteristic.
The values are referred to r0382.

Index: [0] = Value 1
[1] = Value 2
[2] = Value 3
[3] = Value 4
[4] = Value 5

Dependency: Refer to: r0382

© Siemens AG 2012 All Rights Reserved

r1964[0...4] Saturation characteristic rotor flux / Sat_char rot flux

VECTOR_G (n/M)	**Can be changed:** -	**Calculated:** -	**Access level:** 4
	Data type: FloatingPoint32	**Dynamic index:** -	**Func. diagram:** -
	P-Group: Motor identification	**Units group:** -	**Unit selection:** -
	Not for motor type: PEM, REL	**Scaling:** -	**Expert list:** 1
	Min	**Max**	**Factory setting**
	- [%]	- [%]	- [%]

Description: Displays the rotor flux values of the identified saturation characteristic.

After they have been determined, the values are transferred to p0362 ... p0365.

Index:
[0] = Value 1
[1] = Value 2
[2] = Value 3
[3] = Value 4
[4] = Value 5

p1965 Speed_ctrl_opt speed / n_opt speed

VECTOR_G (n/M)	**Can be changed:** U, T	**Calculated:** -	**Access level:** 3
	Data type: FloatingPoint32	**Dynamic index:** -	**Func. diagram:** -
	P-Group: Motor identification	**Units group:** -	**Unit selection:** -
	Not for motor type: REL	**Scaling:** -	**Expert list:** 1
	Min	**Max**	**Factory setting**
	10 [%]	75 [%]	40 [%]

Description: Sets the speed for the identification of the moment of inertia and the vibration test.

Induction motor:

The percentage value is referred to p0310 (rated motor frequency).

Synchronous motor:

The percentage value is referred to the minimum from p0310 (rated motor frequency) and p1082 (maximum speed).

Dependency: Refer to: p0310, p1959

Refer to: F07984, F07985

Note: In order to calculate the inertia, sudden speed changes are carried out - the specified value corresponds to the lower speed setpoint. This value is increased by 20 % for the upper speed value. The q leakage inductance (refer to p1959 bit 5) is determined at zero speed and at 50% of p1965 - however, with a maximum output frequency of 15 Hz and at a minimum of 10% of the rated motor speed.

p1967 Speed_ctrl_opt dynamic factor / n_opt dyn_factor

VECTOR_G (n/M)	**Can be changed:** U, T	**Calculated:** CALC_MOD_ALL	**Access level:** 3
	Data type: FloatingPoint32	**Dynamic index:** -	**Func. diagram:** -
	P-Group: Motor identification	**Units group:** -	**Unit selection:** -
	Not for motor type: REL	**Scaling:** -	**Expert list:** 1
	Min	**Max**	**Factory setting**
	1 [%]	400 [%]	100 [%]

Description: Sets the dynamic response factor for speed controller optimization.

Dependency: Refer to: p1959

Refer to: F07985

Note: For a rotating measurement, this parameter can be used to optimize the speed controller.

p1967 = 100 % --> speed controller optimization according to a symmetric optimum.

p1967 > 100 % --> optimization with a higher dynamic response (Kp higher, Tn lower).

© Siemens AG 2012 All Rights Reserved

r1968 Speed_ctrl_opt dynamic factor actual / n_opt dyn_fact act

VECTOR_G (n/M)	**Can be changed:** -	**Calculated:** -	**Access level:** 3
	Data type: FloatingPoint32	**Dynamic index:** -	**Func. diagram:** -
	P-Group: Motor identification	**Units group:** -	**Unit selection:** -
	Not for motor type: REL	**Scaling:** -	**Expert list:** 1
	Min - [%]	**Max** - [%]	**Factory setting** - [%]

Description: Displays the dynamic factor which is actually achieved for the vibration test

Dependency: Refer to: p1959, p1967
Refer to: F07985

Note: This dynamic factor only refers to the control mode of the speed controller set in p1960.

r1969 Speed_ctrl_opt moment of inertia determined / n_opt M_inert det

VECTOR_G (n/M)	**Can be changed:** -	**Calculated:** -	**Access level:** 4
	Data type: FloatingPoint32	**Dynamic index:** -	**Func. diagram:** -
	P-Group: Motor identification	**Units group:** 25_1	**Unit selection:** p0100
	Not for motor type: REL	**Scaling:** -	**Expert list:** 1
	Min - [kgm²]	**Max** - [kgm²]	**Factory setting** - [kgm²]

Description: Displays the determined moment of inertia of the drive.
After it has been determined, the value is transferred to p0341, p0342.

Dependency: IEC drives (p0100 = 0): unit kg m^2
NEMA drives (p0100 = 1): unit lb ft^2
Refer to: p0341, p0342, p1959
Refer to: F07984

r1970[0...1] Speed_ctrl_opt vibration test vibration frequency determined / n_opt f_vibration

VECTOR_G (n/M)	**Can be changed:** -	**Calculated:** -	**Access level:** 4
	Data type: FloatingPoint32	**Dynamic index:** -	**Func. diagram:** -
	P-Group: Motor identification	**Units group:** -	**Unit selection:** -
	Not for motor type: REL	**Scaling:** -	**Expert list:** 1
	Min - [Hz]	**Max** - [Hz]	**Factory setting** - [Hz]

Description: Displays the vibration frequencies determined by the vibration test.

Index: [0] = Frequency low
[1] = Frequency high

Dependency: Refer to: p1959
Refer to: F07985

r1971[0...1] Speed_ctrl_opt vibration test standard deviation determined / n_opt std. deviat.

VECTOR_G (n/M)	**Can be changed:** -	**Calculated:** -	**Access level:** 4
	Data type: FloatingPoint32	**Dynamic index:** -	**Func. diagram:** -
	P-Group: Motor identification	**Units group:** -	**Unit selection:** -
	Not for motor type: REL	**Scaling:** -	**Expert list:** 1
	Min - [Hz]	**Max** - [Hz]	**Factory setting** - [Hz]

Description: Displays the standard deviations of the vibration frequencies determined by the vibration test

Index: [0] = Standard deviation of low frequency
[1] = Standard deviation of high frequency

Dependency: Refer to: p1959
Refer to: F07985

© Siemens AG 2012 All Rights Reserved

r1972[0...1] Speed_ctrl_opt vibration test number of periods determined / n_opt period qty

VECTOR_G (n/M)	**Can be changed:** -	**Calculated:** -	**Access level:** 4
	Data type: FloatingPoint32	**Dynamic index:** -	**Func. diagram:** -
	P-Group: Motor identification	**Units group:** -	**Unit selection:** -
	Not for motor type: REL	**Scaling:** -	**Expert list:** 1
	Min	**Max**	**Factory setting**
	-	-	-

Description: Displays the period number determined by the vibration test.

Index: [0] = No. of periods of the low frequency
[1] = No. of periods of the high frequency

Dependency: Refer to: p1959
Refer to: F07985

r1973 Rotating measurement, encoder test pulse number determined / n_opt pulse No.

VECTOR_G (n/M)	**Can be changed:** -	**Calculated:** -	**Access level:** 3
	Data type: Integer32	**Dynamic index:** -	**Func. diagram:** -
	P-Group: Motor identification	**Units group:** -	**Unit selection:** -
	Not for motor type: REL	**Scaling:** -	**Expert list:** 1
	Min	**Max**	**Factory setting**
	-	-	-

Description: Displays the number of pulses determined during the vibration test.

Note: A negative signal indicates an incorrect polarity of the encoder signal.

r1979.0...11 BO: Speed_ctrl_opt status / n_opt status

VECTOR_G (n/M)	**Can be changed:** -	**Calculated:** -	**Access level:** 4
	Data type: Unsigned16	**Dynamic index:** -	**Func. diagram:** -
	P-Group: Motor identification	**Units group:** -	**Unit selection:** -
	Not for motor type: REL	**Scaling:** -	**Expert list:** 1
	Min	**Max**	**Factory setting**
	-	-	-

Description: Displays the status to check and monitor the states of speed controller optimization.

Bit field:

Bit	Signal name	1 signal	0 signal	FP
00	Speed controller optimization activated	Yes	No	-
01	Speed controller optimization completed	Yes	No	-
02	Speed controller optimization interrupted	Yes	No	-
04	Enc test active	Yes	No	-
05	Saturation char. identification active	Yes	No	-
06	Moment of inertia identification active	Yes	No	-
07	Recalc. speed controller parameters active	Yes	No	-
08	Speed controller vibration test active	Yes	No	-
09	Magnetizing inductance adapt. active	Yes	No	-
10	Operation with encoder after encoderless operation	Yes	No	-
11	q-leakage inductance identification	Yes	No	-

p1980[0...n] PolID technique / PolID technique

VECTOR_G	**Can be changed:** U, T	**Calculated:** -	**Access level:** 3
	Data type: Integer16	**Dynamic index:** MDS, p0130	**Func. diagram:** -
	P-Group: Motor identification	**Units group:** -	**Unit selection:** -
	Not for motor type: ASM	**Scaling:** -	**Expert list:** 1
	Min	**Max**	**Factory setting**
	1	10	4

Description: Sets the pole position identification technique.

© Siemens AG 2012 All Rights Reserved

Value:
1: Voltage pulsing 1st harmonics
4: Voltage pulsing 2-stage
6: Voltage pulsing 2-stage inverse
10: DC current injection

Dependency: In the simulation mode, the parameter cannot be written into.
Refer to: p1272, p1780

Note: Voltage pulse technique (p1980 = 1, 4, 6) cannot be applied to separately-excited synchronous motors (p0300 = 5) and for for operation with sine-wave output filters (p0230).

p1982[0...n] PolID selection / PolID selection

VECTOR_G

Can be changed: T	**Calculated:** -	**Access level:** 3
Data type: Integer16	**Dynamic index:** MDS, p0130	**Func. diagram:** -
P-Group: Motor identification	**Units group:** -	**Unit selection:** -
Not for motor type: -	**Scaling:** -	**Expert list:** 1
Min	**Max**	**Factory setting**
0	2	0

Description: Activates the pole position identification routine to determine the commutation angle and to carry out a plausibility check.

Value:
0: Pole position identification off
1: Pole position identification for commutation
2: Pole position identification for plausibility check

Recommend.: Re p1982 = 1:
This is used for synchronous motors with motor encoder without absolute data.
The information/data regarding the absolute commutation angle is supplied via a track C/D, Hall sensors, an absolute encoder or from the pole position identification routine.
Re p1982 = 2:
This is used for synchronous motor with motor encoder with absolute data to check this data.
For VECTOR, the following applies:
With p1982 = 2, each time the pulses are enabled it is checked whether the absolute position supplied from the encoder does not exceed a deviation of 45 degrees to the identified pole wheel position.
With separately-excited synchronous motors (p0300 = 5), pole position identification cannot be selected if an encoder with position data is used (e.g. SSI encoder).

Dependency: Refer to: p0325, p0329, p1980, r1984, r1985, r1987, p1990

Note: For encoderless operation, the pole position identification routine is selected with p1780.6

r1984 PolID angular difference / PolID ang diff

VECTOR_G (n/M)

Can be changed: -	**Calculated:** -	**Access level:** 3
Data type: FloatingPoint32	**Dynamic index:** -	**Func. diagram:** -
P-Group: Motor identification	**Units group:** -	**Unit selection:** -
Not for motor type: -	**Scaling:** -	**Expert list:** 1
Min	**Max**	**Factory setting**
- [°]	- [°]	- [°]

Description: Displays the angular difference between the actual electrical commutation angle and the angle determined by the pole position identification.

Dependency: Refer to: p0325, p0329, p1980, p1982, r1985, r1987, p1990

Note: PolID: Pole position identification
When the pole position identification routine is executed several times using p1983, the spread of the measured values can be determined using this value. At the same position, the spread should be less than 2 degrees electrical.

© Siemens AG 2012 All Rights Reserved

r1985 PolID saturation curve / PolID sat_char

VECTOR_G (n/M)	**Can be changed:** -	**Calculated:** -	**Access level:** 3
	Data type: FloatingPoint32	**Dynamic index:** -	**Func. diagram:** -
	P-Group: Motor identification	**Units group:** -	**Unit selection:** -
	Not for motor type: -	**Scaling:** -	**Expert list:** 1
	Min	**Max**	**Factory setting**
	- [Arms]	- [Arms]	- [Arms]

Description: Displays the saturation characteristic of the pole position identification routine (saturation technique).

Displays the current characteristic of the pole position identification routine (elasticity technique).

Dependency: Refer to: p0325, p0329, p1980, p1982, r1984, r1987, p1990

Note: PolID: Pole position identification

Regarding the saturation technique:

The values for the characteristic of the last saturation-based pole position identification routine are output every 1 ms in order to record signals (e.g. trace).

r1987 PolID trigger characteristic / PolID trig_char

VECTOR_G (n/M)	**Can be changed:** -	**Calculated:** -	**Access level:** 3
	Data type: FloatingPoint32	**Dynamic index:** -	**Func. diagram:** -
	P-Group: Motor identification	**Units group:** -	**Unit selection:** -
	Not for motor type: -	**Scaling:** -	**Expert list:** 1
	Min	**Max**	**Factory setting**
	- [%]	- [%]	- [%]

Description: Displays the trigger characteristic of the pole position identification routine.

The values for the characteristic of the last pole position identification routine are output every 1 ms in order to record signals (e.g. trace).

The values for trigger characteristic and saturation characteristic are always output in synchronism from a time perspective.

Dependency: Refer to: p0325, p0329, p1980, p1982, r1984, r1985, p1990

Note: PolID: Pole position identification

The following information and data can be taken from the trigger characteristic.

- the value -100% marks the angle at the start of the measurement.

- the value +100 % marks the commutation angle determined from the pole position identification routine.

p1990 Encoder adjustment, determine angular commutation offset / Enc_adj det ang

VECTOR_G	**Can be changed:** T	**Calculated:** -	**Access level:** 2
	Data type: Integer16	**Dynamic index:** -	**Func. diagram:** -
	P-Group: Motor identification	**Units group:** -	**Unit selection:** -
	Not for motor type: ASM	**Scaling:** -	**Expert list:** 1
	Min	**Max**	**Factory setting**
	0	3	0

Description: This function is only required for synchronous motors and can be started when commissioning for the first time or after replacing an encoder. The function acts on the active motor data set.

Alarm A07971 is output while the angular commutation offset is being determined. p1990 is automatically set to 0 after the angular commutation offset has been determined.

For p1990 = 1 (encoder adjustment with transfer), the following applies:

The angular commutation offset is determined and transferred into p0431.

For p1990 = 2 (encoder adjustment for checking), the following applies:

The angular commutation offset is determined and is not transferred into p0431. For a deviation of more than 6 ° electrical, fault F07413 is output.

For p1990 = 3 (encoder adjustment in operation), the following applies:

PolID procedure runs before the zero mark detection. The angular commutation offset is determined and transferred into p0431. A fine adjustment (p1905) is then optionally possible.

© Siemens AG 2012 All Rights Reserved

Value:
0: De-activated
1: Activated with transfer
2: Activated for checking
3: Activates encoder adjustment in operation

Dependency: In the simulation mode, the parameter cannot be written into.
When selecting the encoder adjustment, the changeover of the drive data sets is suppressed.
Encoder adjustment is only carried out if the function module for "speed/torque control" is activated (r0108.2 = 1).
Refer to: p0325, p0329, p0431, p1272, p1900

Caution: When the encoder is being adjusted, the motor must be operated without a load - and if a motor holding brake is being used, this must be opened.

p1991[0...n] Motor changeover, angular commutation correction / Ang_com corr

VECTOR_G

Can be changed: T	**Calculated:** -	**Access level:** 3
Data type: FloatingPoint32	**Dynamic index:** MDS, p0130	**Func. diagram:** -
P-Group: -	**Units group:** -	**Unit selection:** -
Not for motor type: -	**Scaling:** -	**Expert list:** 1
Min	**Max**	**Factory setting**
-180 [°]	180 [°]	0 [°]

Description: Sets the angle that is added to the commutating angle.

Caution: If the angular correction is not correctly set, when changing over and with closed-loop torque control, the motor can accelerate to high speeds in spite of the fact that a setpoint of zero has been entered.

p1999[0...n] Ang. commutation offset calibr. and PolID scaling / Com_ang_offs scal

VECTOR_G (n/M)

Can be changed: U, T	**Calculated:** -	**Access level:** 3
Data type: FloatingPoint32	**Dynamic index:** MDS, p0130	**Func. diagram:** -
P-Group: Closed-loop control	**Units group:** -	**Unit selection:** -
Not for motor type: REL	**Scaling:** -	**Expert list:** 1
Min	**Max**	**Factory setting**
10 [%]	5000 [%]	100 [%]

Description: Sets the scaling for the runtime of the automatic encoder calibration and of the pole position identification technique in which the current is injected.

Dependency: Refer to: p0341, p0342

Caution: For p1999 > 100 % (setting large moments of inertia) the following applies:
There is no locked rotor monitoring (F07970 fault value 2).
The plausibility check of the encoder signal (F07970 fault value 4) only checks the sign.

Note: For high moments of inertia, it is practical to scale the runtime of the calibration higher.

p2000 Reference frequency / f_ref

B_INF

Can be changed: T	**Calculated:** CALC_MOD_ALL	**Access level:** 2
Data type: FloatingPoint32	**Dynamic index:** -	**Func. diagram:** -
P-Group: Communications	**Units group:** -	**Unit selection:** -
Not for motor type: -	**Scaling:** -	**Expert list:** 1
Min	**Max**	**Factory setting**
0.10 [Hz]	1000.00 [Hz]	50.00 [Hz]

Description: Sets the reference quantity for the frequency.
All frequencies specified as relative value are referred to this reference quantity.
The reference quantity corresponds to 100% or 4000 hex (word) or 4000 0000 hex (double word).
The following applies: Reference frequency (in Hz)

© Siemens AG 2012 All Rights Reserved

p2000 Reference speed reference frequency / n_ref f_ref

ENC

Can be changed: T	**Calculated:** CALC_MOD_ALL	**Access level:** 2
Data type: FloatingPoint32	**Dynamic index:** -	**Func. diagram:** -
P-Group: Communications	**Units group:** -	**Unit selection:** -
Not for motor type: -	**Scaling:** -	**Expert list:** 1
Min	**Max**	**Factory setting**
6.00 [rpm]	210000.00 [rpm]	3000.00 [rpm]

Description: Sets the reference quantity for speed and frequency.

All speeds or frequencies specified as relative value are referred to this reference quantity.

The reference quantity corresponds to 100% or 4000 hex (word) or 4000 0000 hex (double word).

Note: If a BICO interconnection is established between different physical quantities, then the particular reference quantities are used as internal conversion factor.

p2000 Reference velocity, reference frequency / v_ref f_ref

ENC (Lin_enc)

Can be changed: T	**Calculated:** CALC_MOD_ALL	**Access level:** 2
Data type: FloatingPoint32	**Dynamic index:** -	**Func. diagram:** -
P-Group: Communications	**Units group:** -	**Unit selection:** -
Not for motor type: -	**Scaling:** -	**Expert list:** 1
Min	**Max**	**Factory setting**
0.60 [m/min]	600.00 [m/min]	120.00 [m/min]

Description: Sets the reference quantity for velocity and frequency.

All velocities or frequencies specified as relative value are referred to this reference quantity.

The reference quantity corresponds to 100% or 4000 hex (word) or 4000 0000 hex (double word).

The following applies: Reference frequency (in Hz) = reference velocity (in (m/min) / 60)

Note: If a BICO interconnection is established between different physical quantities, then the particular reference quantities are used as internal conversion factor.

p2000 Reference speed reference frequency / n_ref f_ref

VECTOR_G

Can be changed: T	**Calculated:** CALC_MOD_ALL	**Access level:** 2
Data type: FloatingPoint32	**Dynamic index:** -	**Func. diagram:** -
P-Group: Communications	**Units group:** -	**Unit selection:** -
Not for motor type: -	**Scaling:** -	**Expert list:** 1
Min	**Max**	**Factory setting**
6.00 [rpm]	210000.00 [rpm]	3000.00 [rpm]

Description: Sets the reference quantity for speed and frequency.

All speeds or frequencies specified as relative value are referred to this reference quantity.

The reference quantity corresponds to 100% or 4000 hex (word) or 4000 0000 hex (double word).

The following applies: Reference frequency (in Hz) = reference speed (in ((rpm) / 60) x pole pair number)

Dependency: Refer to: p2001, p2002, p2003, r2004

Note: For the automatic calculation (p0340 = 1, p3900 > 0) an appropriate pre-assignment is only made if the parameter is not inhibited from being overwritten using p0573 = 1.

If a BICO interconnection is established between different physical quantities, then the particular reference quantities are used as internal conversion factor.

Example 1:

The signal of an analog input (e.g. r4055[0]) is connected to a speed setpoint (e.g. p1070[0]). The actual percentage input value is cyclically converted into the absolute speed setpoint using the reference speed (p2000).

Example 2:

The setpoint from PROFIBUS (r2050[1]) is connected to a speed setpoint (e.g. p1070[0]). The actual input value is cyclically converted into a percentage value via the pre-specified scaling 4000 hex. This percentage value is converted to the absolute speed setpoint via reference speed (p2000).

© Siemens AG 2012 All Rights Reserved

p2001 Reference voltage / Reference voltage

B_INF, VECTOR_G	**Can be changed:** T	**Calculated:** CALC_MOD_ALL	**Access level:** 3
	Data type: FloatingPoint32	**Dynamic index:** -	**Func. diagram:** -
	P-Group: Communications	**Units group:** -	**Unit selection:** -
	Not for motor type: -	**Scaling:** -	**Expert list:** 1
	Min 10 [Vrms]	**Max** 100000 [Vrms]	**Factory setting** 1000 [Vrms]

Description:

Sets the reference quantity for voltages.

All voltages specified as relative value are referred to this reference quantity. This also applies for direct voltage values (= rms value) like the DC-link voltage.

The reference quantity corresponds to 100% or 4000 hex (word) or 4000 0000 hex (double word).

Note:

This reference quantity also applies to direct voltage values. It is not interpreted as rms value, but as DC voltage value.

Note:

For the automatic calculation (p0340 = 1, p3900 > 0) an appropriate pre-assignment is only made if the parameter is not inhibited from being overwritten using p0573 = 1.

If a BICO interconnection is established between different physical quantities, then the particular reference quantities are used as internal conversion factor.

For infeed units, the parameterized device supply voltage (p0210) is pre-assigned as the reference quantity.

Example:

The actual value of the DC link voltage (r0070) is connected to a test socket (e.g. p0771[0]). The actual voltage value is cyclically converted into a percentage of the reference voltage (p2001) and output according to the parameterized scaling.

p2002 Reference current / I_ref

B_INF, VECTOR_G	**Can be changed:** T	**Calculated:** CALC_MOD_ALL	**Access level:** 3
	Data type: FloatingPoint32	**Dynamic index:** -	**Func. diagram:** -
	P-Group: Communications	**Units group:** -	**Unit selection:** -
	Not for motor type: -	**Scaling:** -	**Expert list:** 1
	Min 0.10 [Arms]	**Max** 100000.00 [Arms]	**Factory setting** 100.00 [Arms]

Description:

Sets the reference quantity for currents.

All currents specified as relative value are referred to this reference quantity.

The reference quantity corresponds to 100% or 4000 hex (word) or 4000 0000 hex (double word).

Notice:

If various DDS are used with different motor data, then the reference quantities remain the same as these are not changed over with the DDS. The resulting conversion factor should be taken into account (e.g. for trace records).

Example:

p2002 = 100 A

Reference quantity 100 A corresponds to 100 %

p0305[0] = 100 A

Rated motor current 100 A for MDS0 in DDS0 --> 100 % corresponds to 100 % of the rated motor current

p0305[1] = 50 A

Rated motor current 50 A for MDS1 in DDS1 --> 100 % corresponds to 200 % of the rated motor current

Note:

For the automatic calculation (p0340 = 1, p3900 > 0) an appropriate pre-assignment is only made if the parameter is not inhibited from being overwritten using p0573 = 1.

If a BICO interconnection is established between different physical quantities, then the particular reference quantities are used as internal conversion factor.

For infeed units, the rated line current, which is obtained from the rated power and parameterized rated line supply voltage (p2002 = r0206 / p0210 / 1.73) is pre-assigned as the reference quantity.

Example:

The actual value of a phase current (r0069[0]) is connected to a test socket (e.g. p0771[0]). The actual current value is cyclically converted into a percentage of the reference current (p2002) and output according to the parameterized scaling.

© Siemens AG 2012 All Rights Reserved

p2003 Reference torque / M_ref

VECTOR_G

Can be changed: T	**Calculated:** CALC_MOD_ALL	**Access level:** 3
Data type: FloatingPoint32	**Dynamic index:** -	**Func. diagram:** -
P-Group: Communications	**Units group:** 7_2	**Unit selection:** p0505
Not for motor type: -	**Scaling:** -	**Expert list:** 1
Min	**Max**	**Factory setting**
0.01 [Nm]	20000000.00 [Nm]	1.00 [Nm]

Description: Sets the reference quantity for torque.

All torques specified as relative value are referred to this reference quantity.

The reference quantity corresponds to 100% or 4000 hex (word) or 4000 0000 hex (double word).

Note: For the automatic calculation (p0340 = 1, p3900 > 0) an appropriate pre-assignment is only made if the parameter is not inhibited from being overwritten using p0573 = 1.

If a BICO interconnection is established between different physical quantities, then the particular reference quantities are used as internal conversion factor.

Example:

The actual value of the total torque (r0079) is connected to a test socket (e.g. p0771[0]). The actual torque is cyclically converted into a percentage of the reference torque (p2003) and output according to the parameterized scaling.

r2004 Reference power / P_ref

B_INF, VECTOR_G

Can be changed: -	**Calculated:** -	**Access level:** 3
Data type: FloatingPoint32	**Dynamic index:** -	**Func. diagram:** -
P-Group: Communications	**Units group:** 14_10	**Unit selection:** p0505
Not for motor type: -	**Scaling:** -	**Expert list:** 1
Min	**Max**	**Factory setting**
- [kW]	- [kW]	- [kW]

Description: Displays the reference quantity for power.

All power ratings specified as relative value are referred to this reference quantity.

The reference quantity corresponds to 100% or 4000 hex (word) or 4000 0000 hex (double word).

Dependency: This value is calculated as follows:

Infeed: Calculated from voltage times current.

Closed-loop control: Calculated from torque times speed.

Refer to: p2000, p2001, p2002, p2003

Note: If a BICO interconnection is established between different physical quantities, then the particular reference quantities are used as internal conversion factor.

The reference power is calculated as follows:

- 2 * Pi * reference speed / 60 * reference torque (motor)
- reference voltage * reference current * root(3) (infeed)

p2005 Reference angle / Reference angle

VECTOR_G

Can be changed: T	**Calculated:** CALC_MOD_ALL	**Access level:** 3
Data type: FloatingPoint32	**Dynamic index:** -	**Func. diagram:** -
P-Group: Communications	**Units group:** -	**Unit selection:** -
Not for motor type: -	**Scaling:** -	**Expert list:** 1
Min	**Max**	**Factory setting**
90.00 [°]	180.00 [°]	90.00 [°]

Description: Sets the reference quantity for angle.

All angles specified as relative value are referred to this reference quantity.

The reference quantity corresponds to 100% or 4000 hex (word) or 4000 0000 hex (double word).

Note: For the automatic calculation (p0340 = 1, p3900 > 0) an appropriate pre-assignment is only made if the parameter is not inhibited from being overwritten using p0573 = 1.

If a BICO interconnection is established between different physical quantities, then the particular reference quantities are used as internal conversion factor.

© Siemens AG 2012 All Rights Reserved

p2006 Reference temp / Ref temp

B_INF, TM150, TM31, VECTOR_G

Can be changed: T	**Calculated:** CALC_MOD_ALL	**Access level:** 3
Data type: FloatingPoint32	**Dynamic index:** -	**Func. diagram:** -
P-Group: Communications	**Units group:** -	**Unit selection:** -
Not for motor type: -	**Scaling:** -	**Expert list:** 1
Min	**Max**	**Factory setting**
50.00 [°C]	300.00 [°C]	100.00 [°C]

Description: Sets the reference quantity for temperature.
All temperatures specified as relative value are referred to this reference quantity.
The reference quantity corresponds to 100% or 4000 hex (word) or 4000 0000 hex (double word).

p2007 Reference acceleration / a_ref

VECTOR_G

Can be changed: T	**Calculated:** CALC_MOD_ALL	**Access level:** 3
Data type: FloatingPoint32	**Dynamic index:** -	**Func. diagram:** -
P-Group: Communications	**Units group:** -	**Unit selection:** -
Not for motor type: -	**Scaling:** -	**Expert list:** 1
Min	**Max**	**Factory setting**
0.01 [rev/s²]	500000.00 [rev/s²]	0.01 [rev/s²]

Description: Sets the reference quantity for acceleration rates.
All acceleration rates specified as relative value are referred to this reference quantity.
The reference quantity corresponds to 100% or 4000 hex (word) or 4000 0000 hex (double word).

Note: For the automatic calculation (p0340 = 1, p3900 > 0) an appropriate pre-assignment is only made if the parameter is not inhibited from being overwritten using p0573 = 1. If a BICO interconnection is established between different physical quantities, then the particular reference quantities are used as internal conversion factor.
The reference acceleration is calculated as follows:
Reference speed (p2000) converted from 1/min to 1/s divided by 1 s
--> p2007 = p2000 [rpm] / (60 [s/min] * 1 [s])

r2019[0...7] Comm int error statistics / Comm err

CU_G130_DP, CU_G130_PN, CU_G150_DP, CU_G150_PN

Can be changed: -	**Calculated:** -	**Access level:** 4
Data type: Unsigned32	**Dynamic index:** -	**Func. diagram:** -
P-Group: Communications	**Units group:** -	**Unit selection:** -
Not for motor type: -	**Scaling:** -	**Expert list:** 1
Min	**Max**	**Factory setting**
-	-	-

Description: Displays the receive errors at the commissioning interface (RS232).

Index:
[0] = Number of error-free telegrams
[1] = Number of rejected telegrams
[2] = Number of framing errors
[3] = Number of overrun errors
[4] = Number of parity errors
[5] = Number of starting character errors
[6] = Number of checksum errors
[7] = Number of length errors

p2020 Field bus interface baud rate / Field bus baud

CU_G130_DP, CU_G150_DP

Can be changed: T	**Calculated:** -	**Access level:** 2
Data type: Integer16	**Dynamic index:** -	**Func. diagram:** -
P-Group: Communications	**Units group:** -	**Unit selection:** -
Not for motor type: -	**Scaling:** -	**Expert list:** 1
Min	**Max**	**Factory setting**
4	13	8

Description: Sets the baud rate for the fieldbus interface USS.

© Siemens AG 2012 All Rights Reserved

Value:
4: 2400 baud
5: 4800 baud
6: 9600 baud
7: 19200 baud
8: 38400 baud
9: 57600 baud
10: 76800 baud
11: 93750 baud
12: 115200 baud
13: 187500 baud

Note: Fieldbus IF: Fieldbus interface
Changes only become effective after POWER ON.
The parameter is not influenced by setting the factory setting.
The parameter is set to the factory setting when the protocol is reselected.

p2021 Field bus interface address / Field bus address

CU_G130_DP, CU_G150_DP

Can be changed: T	**Calculated:** -	**Access level:** 2
Data type: Unsigned16	**Dynamic index:** -	**Func. diagram:** -
P-Group: Communications	**Units group:** -	**Unit selection:** -
Not for motor type: -	**Scaling:** -	**Expert list:** 1
Min	**Max**	**Factory setting**
0	31	0

Description: Displays or sets the address for the fieldbus interface USS.
The address can be set as follows:
1) Using the address switch on the Control Unit.
--> p2021 displays the address setting.
--> A change only becomes effective after a POWER ON.
2) Using p2021
--> Only if an address of 0 or an address which is invalid for the fieldbus selected in p2030 has been set using the address switch.
--> The address is saved in a non-volatile fashion using the function "copy from RAM to ROM".
--> A change only becomes effective after a POWER ON.

Dependency: Refer to: p2030

Note: Changes only become effective after POWER ON.
The parameter is not influenced by setting the factory setting.
The parameter is set to the factory setting when the protocol is reselected.

p2022 Field bus int USS PZD no. / Field bus USS PZD

CU_G130_DP, CU_G150_DP

Can be changed: T	**Calculated:** -	**Access level:** 2
Data type: Unsigned16	**Dynamic index:** -	**Func. diagram:** -
P-Group: Communications	**Units group:** -	**Unit selection:** -
Not for motor type: -	**Scaling:** -	**Expert list:** 1
Min	**Max**	**Factory setting**
0	16	2

Description: Sets the number of 16-bit words in the PZD part of the USS telegram for the field bus interface.

Dependency: Refer to: p2030

Note: The parameter is not influenced by setting the factory setting.

© Siemens AG 2012 All Rights Reserved

p2023 Field bus int USS PKW no. / Field bus USS PKW

CU_G130_DP, CU_G150_DP

Can be changed: T	**Calculated:** -	**Access level:** 2
Data type: Integer16	**Dynamic index:** -	**Func. diagram:** -
P-Group: Communications	**Units group:** -	**Unit selection:** -
Not for motor type: -	**Scaling:** -	**Expert list:** 1
Min	**Max**	**Factory setting**
0	127	127

Description: Sets the number of 16-bit words in the PKW part of the USS telegram for the field bus interface.

Value:
0: PKW 0 words
3: PKW 3 words
4: PKW 4 words
127: PKW variable

Dependency: Refer to: p2030

Note: The parameter is not influenced by setting the factory setting.

r2029[0...7] Field bus int error statistics / Field bus error

CU_G130_DP, CU_G150_DP

Can be changed: -	**Calculated:** -	**Access level:** 3
Data type: Unsigned32	**Dynamic index:** -	**Func. diagram:** -
P-Group: Communications	**Units group:** -	**Unit selection:** -
Not for motor type: -	**Scaling:** -	**Expert list:** 1
Min	**Max**	**Factory setting**
-	-	-

Description: Displays the receive errors on the field bus interface (USS).

Index:
[0] = Number of error-free telegrams
[1] = Number of rejected telegrams
[2] = Number of framing errors
[3] = Number of overrun errors
[4] = Number of parity errors
[5] = Number of starting character errors
[6] = Number of checksum errors
[7] = Number of length errors

p2030 Field bus int protocol selection / Field bus protocol

CU_G130_DP, CU_G150_DP

Can be changed: T	**Calculated:** -	**Access level:** 1
Data type: Integer16	**Dynamic index:** -	**Func. diagram:** -
P-Group: Communications	**Units group:** -	**Unit selection:** -
Not for motor type: -	**Scaling:** -	**Expert list:** 1
Min	**Max**	**Factory setting**
3	6	3

Description: Sets the communication protocol for the field bus interface.

Value:
3: PROFIBUS
6: USS(RS232)

Note: Changes only become effective after POWER ON.
The parameter is not influenced by setting the factory setting.

r2032 Master control, control word effective / PcCtrl STW eff

B_INF

Can be changed: -	**Calculated:** -	**Access level:** 2
Data type: Unsigned16	**Dynamic index:** -	**Func. diagram:** -
P-Group: Displays, signals	**Units group:** -	**Unit selection:** -
Not for motor type: -	**Scaling:** -	**Expert list:** 1
Min	**Max**	**Factory setting**
-	-	-

Description: Displays the effective control word 1 (STW1) of the drive for the master control.

© Siemens AG 2012 All Rights Reserved

Bit field:

Bit	Signal name	1 signal	0 signal	FP
00	ON/OFF1	Yes	No	-
01	OC / OFF2	Yes	No	-
03	Operation enable	Yes	No	-
07	Acknowledge fault	Yes	No	-
10	Master ctrl by PLC	Yes	No	-

Notice: The master control only influences control word 1 and speed setpoint 1. Other control words/setpoints can be transferred from another automation device.

Note: OC: Operating condition

r2032 Master control, control word effective / PcCtrl STW eff

VECTOR_G

Can be changed: - **Calculated:** - **Access level:** 2
Data type: Unsigned16 **Dynamic index:** - **Func. diagram:** -
P-Group: Displays, signals **Units group:** - **Unit selection:** -
Not for motor type: - **Scaling:** - **Expert list:** 1

Min	Max	Factory setting
-	-	-

Description: Displays the effective control word 1 (STW1) of the drive for the master control.

Bit field:

Bit	Signal name	1 signal	0 signal	FP
00	ON/OFF1	Yes	No	-
01	OC / OFF2	Yes	No	-
02	OC / OFF3	Yes	No	-
03	Operation enable	Yes	No	-
04	Ramp-function generator enable	Yes	No	-
05	Start ramp-function generator	Yes	No	-
06	Speed setpoint enable	Yes	No	-
07	Acknowledge fault	Yes	No	-
08	Jog bit 0	Yes	No	3030
09	Jog bit 1	Yes	No	3030
10	Master ctrl by PLC	Yes	No	-

Notice: The master control only influences control word 1 and speed setpoint 1. Other control words/setpoints can be transferred from another automation device.

Note: OC: Operating condition

p2035 Fieldbus interface USS PIV drive object number / Fieldbus USS DO_no

CU_G130_DP, CU_G150_DP

Can be changed: U, T **Calculated:** - **Access level:** 2
Data type: Integer16 **Dynamic index:** - **Func. diagram:** -
P-Group: Communications **Units group:** - **Unit selection:** -
Not for motor type: - **Scaling:** - **Expert list:** 1

Min	Max	Factory setting
1	62	2

Description: Sets the drive object number for communication via the field bus interface (USS).

Dependency: Refer to: p0978

Note: p2035 defines the destination for USS parameter requests (PIV).
p0978[0] defines the destination for USS process data (PZD).
The parameter is available globally on all drive objects.
The parameter is not influenced by setting the factory setting.

© Siemens AG 2012 All Rights Reserved

p2037 IF1 PROFIdrive STW1.10 = 0 mode / IF1 PD STW1.10=0

B_INF, ENC, VECTOR_G

Can be changed: T	**Calculated:** -	**Access level:** 3
Data type: Integer16	**Dynamic index:** -	**Func. diagram:** -
P-Group: Communications	**Units group:** -	**Unit selection:** -
Not for motor type: -	**Scaling:** -	**Expert list:** 1
Min	**Max**	**Factory setting**
0	2	0

Description: Sets the processing mode for PROFIdrive STW1.10 "master control by PLC".

Generally, control world 1 is received with the first receive word (PZD1) (this is in conformance to the PROFIdrive profile). The behavior of STW1.10 = 0 corresponds to that of the PROFIdrive profile. For other applications that deviate from this, the behavior can be adapted using this particular parameter.

Value:
0: Freeze setpoints and continue to process sign-of-life
1: Freeze setpoints and sign-of-life
2: Do not freeze setpoints

Recommend.: Do not change the setting p2037 = 0.

Note: If the STW1 is not transferred according to the PROFIdrive with PZD1 (with bit 10 "master control by PLC"), then p2037 should be set to 2.

p2038 IF1 PROFIdrive STW/ZSW interface mode / PD STW/ZSW IF mode

VECTOR_G

Can be changed: T	**Calculated:** -	**Access level:** 3
Data type: Integer16	**Dynamic index:** -	**Func. diagram:** -
P-Group: Communications	**Units group:** -	**Unit selection:** -
Not for motor type: -	**Scaling:** -	**Expert list:** 1
Min	**Max**	**Factory setting**
0	2	0

Description: Sets the interface mode of the PROFIdrive control words and status words.

When selecting a telegram via p0922 (p2079), this parameter influences the device-specific assignment of the bits in the control and status words.

Value:
0: SINAMICS
1: SIMODRIVE 611 universal
2: VIK-NAMUR

Dependency: Refer to: p0922, p2079

Notice: The parameter may be protected as a result of p0922 or p2079 and cannot be changed.

Note: For p0922 (p2079) = 100 ... 199, p2038 is automatically set to 1 and p2038 can no longer be changed. This means that for these telegrams, the "SIMODRIVE 611 universal" interface mode is set and cannot be changed.

p2039 Select debug monitor interface / Debug monit select

CU_G130_DP, CU_G130_PN, CU_G150_DP, CU_G150_PN

Can be changed: U, T	**Calculated:** -	**Access level:** 4
Data type: Unsigned16	**Dynamic index:** -	**Func. diagram:** -
P-Group: Communications	**Units group:** -	**Unit selection:** -
Not for motor type: -	**Scaling:** -	**Expert list:** 1
Min	**Max**	**Factory setting**
0	3	0

Description: Sets the serial interface for the debug monitor.

The serial interface for the debug monitor is COM1 (X140) or COM2 (internal).

Value = 0: COM2 (internal)

Value = 1: COM1 (X140), commissioning protocol is de-activated

Value = 2: COM2 (internal)

Value = 3: Reserved

© Siemens AG 2012 All Rights Reserved

p2040 Fieldbus interface monitoring time / Fieldbus t_monit

CU_G130_DP, CU_G150_DP

Can be changed: U, T	**Calculated:** -	**Access level:** 3
Data type: FloatingPoint32	**Dynamic index:** -	**Func. diagram:** -
P-Group: Communications	**Units group:** -	**Unit selection:** -
Not for motor type: -	**Scaling:** -	**Expert list:** 1
Min	**Max**	**Factory setting**
0 [ms]	1999999 [ms]	100 [ms]

Description: Sets the monitoring time to monitor the process data received via the fieldbus interface.
If no process data is received within this time, an appropriate message is output.

Dependency: Refer to: F01910

Note: 0: The monitoring is de-activated.

p2042 PROFIBUS Ident Number / PB Ident No.

CU_G130_DP, CU_G150_DP

Can be changed: T	**Calculated:** -	**Access level:** 3
Data type: Integer16	**Dynamic index:** -	**Func. diagram:** -
P-Group: Communications	**Units group:** -	**Unit selection:** -
Not for motor type: -	**Scaling:** -	**Expert list:** 1
Min	**Max**	**Factory setting**
0	1	0

Description: Sets the PROFIBUS Ident Number (PNO-ID).
SINAMICS can be operated with various identities on PROFIBUS. This allows the use of a PROFIBUS GSD that is independent of the device (e.g. PROFIdrive VIK-NAMUR with Ident Number 3AA0 hex).

Value:
0: SINAMICS
1: VIK-NAMUR

Note: Every change only becomes effective after a POWER ON.

r2043.0...2 BO: IF1 PROFIdrive PZD state / IF1 PD PZD state

CU_G130_DP, CU_G130_PN, CU_G150_DP, CU_G150_PN

Can be changed: -	**Calculated:** -	**Access level:** 3
Data type: Unsigned8	**Dynamic index:** -	**Func. diagram:** 2410
P-Group: Communications	**Units group:** -	**Unit selection:** -
Not for motor type: -	**Scaling:** -	**Expert list:** 1
Min	**Max**	**Factory setting**
-	-	-

Description: Displays the PROFIdrive PZD state.

Bit field:

Bit	Signal name	1 signal	0 signal	FP
00	Setpoint failure	Yes	No	-
01	Clock cycle synchronous operation active	Yes	No	-
02	Fieldbus oper	Yes	No	-

Dependency: Refer to: p2044

Note: When using the "setpoint failure" signal, the bus can be monitored and an application-specific response triggered when the setpoint fails.

p2044 IF1 PROFIdrive fault delay / IF1 PD fault delay

B_INF, ENC, VECTOR_G

Can be changed: U, T	**Calculated:** -	**Access level:** 3
Data type: FloatingPoint32	**Dynamic index:** -	**Func. diagram:** 2410
P-Group: Communications	**Units group:** -	**Unit selection:** -
Not for motor type: -	**Scaling:** -	**Expert list:** 1
Min	**Max**	**Factory setting**
0 [s]	100 [s]	0 [s]

Description: Sets the delay time to initiate fault F01910 after a setpoint failure.
The time until the fault is initiated can be used by the application. This means that is is possible to respond to the failure while the drive is still operational (e.g. emergency retraction).

© Siemens AG 2012 All Rights Reserved

Dependency: Refer to: r2043
Refer to: F01910

p2045 CI: PB/PN clock synchronous controller sign-of-life signal source / PB/PN ctrSoL S_src

ENC, VECTOR_G (n/M)

Can be changed: T	**Calculated:** -	**Access level:** 3
Data type: Unsigned32 / Integer16	**Dynamic index:** -	**Func. diagram:** 2410
P-Group: Communications	**Units group:** -	**Unit selection:** -
Not for motor type: -	**Scaling:** -	**Expert list:** 1
Min	**Max**	**Factory setting**
-	-	0

Description: Connector input for the sign-of-life of the clock synchronous PROFIBUS/PROFINET controller.
The sign-of-life is expected at bits 12 to 15. Bits 0 to 11 are not evaluated.
The sign-of-life signal is normally received in PZD4 (control word 2) from the controller.

Dependency: Refer to: p0925, r2065

Notice: The parameter may be protected as a result of p0922 or p2079 and cannot be changed.

p2047 PROFIBUS additional monitoring time / PB suppl t_monit

CU_G130_DP, CU_G150_DP

Can be changed: U, T	**Calculated:** -	**Access level:** 3
Data type: FloatingPoint32	**Dynamic index:** -	**Func. diagram:** 2410
P-Group: Communications	**Units group:** -	**Unit selection:** -
Not for motor type: -	**Scaling:** -	**Expert list:** 1
Min	**Max**	**Factory setting**
0 [ms]	20000 [ms]	0 [ms]

Description: Sets the additional monitoring time to monitor the process data received via PROFIBUS.
The additional monitoring time enables short bus faults to be compensated.
If no process data is received within this time, an appropriate message is output.

Recommend.: Do not set the additional monitoring time for clock-synchronous operation.

Dependency: Refer to: F01910

Note: For controller STOP, the additional monitoring time is not effective.

p2048 IF1 PROFIdrive PZD sampling time / IF1 PZD t_sample

CU_G130_DP, CU_G130_PN, CU_G150_DP, CU_G150_PN

Can be changed: C1(3)	**Calculated:** -	**Access level:** 3
Data type: FloatingPoint32	**Dynamic index:** -	**Func. diagram:** -
P-Group: Communications	**Units group:** -	**Unit selection:** -
Not for motor type: -	**Scaling:** -	**Expert list:** 1
Min	**Max**	**Factory setting**
1.00 [ms]	16.00 [ms]	4.00 [ms]

Description: Sets the sampling time for the cyclic interface 1 (IF1).

Note: The system only permits certain sampling times and after writing to this parameter, displays the value that has actually been set.
For clock cycle synchronous operation, the specified bus cycle time applies (Tdp).

r2050[0...9] CO: IF1 PROFIdrive PZD receive word / IF1 PZD recv word

B_INF

Can be changed: -	**Calculated:** -	**Access level:** 3
Data type: Integer16	**Dynamic index:** -	**Func. diagram:** -
P-Group: Communications	**Units group:** -	**Unit selection:** -
Not for motor type: -	**Scaling:** 4000H	**Expert list:** 1
Min	**Max**	**Factory setting**
-	-	-

Description: Connector output to interconnect PZD (setpoints) with word format received from the PROFIdrive controller.

Index: [0] = PZD 1
[1] = PZD 2

© Siemens AG 2012 All Rights Reserved

[2] = PZD 3
[3] = PZD 4
[4] = PZD 5
[5] = PZD 6
[6] = PZD 7
[7] = PZD 8
[8] = PZD 9
[9] = PZD 10

Note: IF1: Interface 1

r2050[0...19] CO: IF1 PROFIdrive PZD receive word / IF1 PZD recv word

CU_G130_DP, CU_G130_PN, CU_G150_DP, CU_G150_PN

Can be changed: -	**Calculated:** -	**Access level:** 3
Data type: Integer16	**Dynamic index:** -	**Func. diagram:** -
P-Group: Communications	**Units group:** -	**Unit selection:** -
Not for motor type: -	**Scaling:** 4000H	**Expert list:** 1
Min	**Max**	**Factory setting**
-	-	-

Description: Connector output to interconnect PZD (setpoints) with word format received from the PROFIdrive controller.

Index:
[0] = PZD 1
[1] = PZD 2
[2] = PZD 3
[3] = PZD 4
[4] = PZD 5
[5] = PZD 6
[6] = PZD 7
[7] = PZD 8
[8] = PZD 9
[9] = PZD 10
[10] = PZD 11
[11] = PZD 12
[12] = PZD 13
[13] = PZD 14
[14] = PZD 15
[15] = PZD 16
[16] = PZD 17
[17] = PZD 18
[18] = PZD 19
[19] = PZD 20

Note: IF1: Interface 1

r2050[0...3] CO: IF1 PROFIdrive PZD receive word / IF1 PZD recv word

ENC

Can be changed: -	**Calculated:** -	**Access level:** 3
Data type: Integer16	**Dynamic index:** -	**Func. diagram:** 2440, 2468
P-Group: Communications	**Units group:** -	**Unit selection:** -
Not for motor type: -	**Scaling:** 4000H	**Expert list:** 1
Min	**Max**	**Factory setting**
-	-	-

Description: Connector output to interconnect PZD (setpoints) with word format received from the PROFIdrive controller.

Index:
[0] = PZD 1
[1] = PZD 2
[2] = PZD 3
[3] = PZD 4

Dependency: Refer to: r2060

Notice: Where there is a multiple interconnection of a connector output, all the connector inputs must either have Integer or FloatingPoint data types.

A BICO interconnection for a single PZD can only take place either on r2050 or r2060.

Note: IF1: Interface 1

© Siemens AG 2012 All Rights Reserved

r2050[0...4] CO: IF1 PROFIdrive PZD receive word / IF1 PZD recv word

TB30, TM150, TM31	**Can be changed:** -	**Calculated:** -	**Access level:** 3
	Data type: Integer16	**Dynamic index:** -	**Func. diagram:** -
	P-Group: Communications	**Units group:** -	**Unit selection:** -
	Not for motor type: -	**Scaling:** 4000H	**Expert list:** 1
	Min	**Max**	**Factory setting**
	-	-	-

Description: Connector output to interconnect PZD (setpoints) with word format received from the PROFIdrive controller.

Index:
[0] = PZD 1
[1] = PZD 2
[2] = PZD 3
[3] = PZD 4
[4] = PZD 5

Note: IF1: Interface 1

r2050[0...31] CO: IF1 PROFIdrive PZD receive word / IF1 PZD recv word

VECTOR_G	**Can be changed:** -	**Calculated:** -	**Access level:** 3
	Data type: Integer16	**Dynamic index:** -	**Func. diagram:** 2440, 2468
	P-Group: Communications	**Units group:** -	**Unit selection:** -
	Not for motor type: -	**Scaling:** 4000H	**Expert list:** 1
	Min	**Max**	**Factory setting**
	-	-	-

Description: Connector output to interconnect PZD (setpoints) with word format received from the PROFIdrive controller.

Index:
[0] = PZD 1
[1] = PZD 2
[2] = PZD 3
[3] = PZD 4
[4] = PZD 5
[5] = PZD 6
[6] = PZD 7
[7] = PZD 8
[8] = PZD 9
[9] = PZD 10
[10] = PZD 11
[11] = PZD 12
[12] = PZD 13
[13] = PZD 14
[14] = PZD 15
[15] = PZD 16
[16] = PZD 17
[17] = PZD 18
[18] = PZD 19
[19] = PZD 20
[20] = PZD 21
[21] = PZD 22
[22] = PZD 23
[23] = PZD 24
[24] = PZD 25
[25] = PZD 26
[26] = PZD 27
[27] = PZD 28
[28] = PZD 29
[29] = PZD 30
[30] = PZD 31
[31] = PZD 32

Dependency: Refer to: r2060

© Siemens AG 2012 All Rights Reserved

Notice: Where there is a multiple interconnection of a connector output, all the connector inputs must either have Integer or FloatingPoint data types.
A BICO interconnection for a single PZD can only take place either on r2050 or r2060.

Note: IF1: Interface 1

p2051[0...9] CI: IF1 PROFIdrive PZD send word / IF1 PZD send word

B_INF

Can be changed: U, T	**Calculated:** -	**Access level:** 3
Data type: Unsigned32 / Integer16	**Dynamic index:** -	**Func. diagram:** -
P-Group: Communications	**Units group:** -	**Unit selection:** -
Not for motor type: -	**Scaling:** 4000H	**Expert list:** 1
Min	**Max**	**Factory setting**
-	-	0

Description: Selects the PZD (actual values) with word format to be sent to the PROFIdrive controller.

Index:
[0] = PZD 1
[1] = PZD 2
[2] = PZD 3
[3] = PZD 4
[4] = PZD 5
[5] = PZD 6
[6] = PZD 7
[7] = PZD 8
[8] = PZD 9
[9] = PZD 10

Notice: The parameter may be protected as a result of p0922 or p2079 and cannot be changed.

Note: IF1: Interface 1

p2051[0...24] CI: IF1 PROFIdrive PZD send word / IF1 PZD send word

CU_G130_DP, CU_G130_PN, CU_G150_DP, CU_G150_PN

Can be changed: U, T	**Calculated:** -	**Access level:** 3
Data type: Unsigned32 / Integer16	**Dynamic index:** -	**Func. diagram:** -
P-Group: Communications	**Units group:** -	**Unit selection:** -
Not for motor type: -	**Scaling:** 4000H	**Expert list:** 1
Min	**Max**	**Factory setting**
-	-	0

Description: Selects the PZD (actual values) with word format to be sent to the PROFIdrive controller.

Index:
[0] = PZD 1
[1] = PZD 2
[2] = PZD 3
[3] = PZD 4
[4] = PZD 5
[5] = PZD 6
[6] = PZD 7
[7] = PZD 8
[8] = PZD 9
[9] = PZD 10
[10] = PZD 11
[11] = PZD 12
[12] = PZD 13
[13] = PZD 14
[14] = PZD 15
[15] = PZD 16
[16] = PZD 17
[17] = PZD 18
[18] = PZD 19
[19] = PZD 20
[20] = PZD 21
[21] = PZD 22
[22] = PZD 23

© Siemens AG 2012 All Rights Reserved

[23] = PZD 24
[24] = PZD 25

Notice: The parameter may be protected as a result of p0922 or p2079 and cannot be changed.

Note: IF1: Interface 1

p2051[0...11] CI: IF1 PROFIdrive PZD send word / IF1 PZD send word

ENC

Can be changed: U, T	**Calculated:** -	**Access level:** 3
Data type: Unsigned32 / Integer16	**Dynamic index:** -	**Func. diagram:** 2470
P-Group: Communications	**Units group:** -	**Unit selection:** -
Not for motor type: -	**Scaling:** 4000H	**Expert list:** 1
Min	**Max**	**Factory setting**
-	-	0

Description: Selects the PZD (actual values) with word format to be sent to the PROFIdrive controller.

Index:
[0] = PZD 1
[1] = PZD 2
[2] = PZD 3
[3] = PZD 4
[4] = PZD 5
[5] = PZD 6
[6] = PZD 7
[7] = PZD 8
[8] = PZD 9
[9] = PZD 10
[10] = PZD 11
[11] = PZD 12

Dependency: Refer to: p2061

Notice: The parameter may be protected as a result of p0922 or p2079 and cannot be changed.

Note: IF1: Interface 1

p2051[0...4] CI: IF1 PROFIdrive PZD send word / IF1 PZD send word

TB30, TM150, TM31

Can be changed: U, T	**Calculated:** -	**Access level:** 3
Data type: Unsigned32 / Integer16	**Dynamic index:** -	**Func. diagram:** -
P-Group: Communications	**Units group:** -	**Unit selection:** -
Not for motor type: -	**Scaling:** 4000H	**Expert list:** 1
Min	**Max**	**Factory setting**
-	-	0

Description: Selects the PZD (actual values) with word format to be sent to the PROFIdrive controller.

Index:
[0] = PZD 1
[1] = PZD 2
[2] = PZD 3
[3] = PZD 4
[4] = PZD 5

Notice: The parameter may be protected as a result of p0922 or p2079 and cannot be changed.

Note: IF1: Interface 1

p2051[0...31] CI: IF1 PROFIdrive PZD send word / IF1 PZD send word

VECTOR_G

Can be changed: U, T	**Calculated:** -	**Access level:** 3
Data type: Unsigned32 / Integer16	**Dynamic index:** -	**Func. diagram:** 2470
P-Group: Communications	**Units group:** -	**Unit selection:** -
Not for motor type: -	**Scaling:** 4000H	**Expert list:** 1
Min	**Max**	**Factory setting**
-	-	0

Description: Selects the PZD (actual values) with word format to be sent to the PROFIdrive controller.

Index:
[0] = PZD 1
[1] = PZD 2
[2] = PZD 3

© Siemens AG 2012 All Rights Reserved

[3] = PZD 4
[4] = PZD 5
[5] = PZD 6
[6] = PZD 7
[7] = PZD 8
[8] = PZD 9
[9] = PZD 10
[10] = PZD 11
[11] = PZD 12
[12] = PZD 13
[13] = PZD 14
[14] = PZD 15
[15] = PZD 16
[16] = PZD 17
[17] = PZD 18
[18] = PZD 19
[19] = PZD 20
[20] = PZD 21
[21] = PZD 22
[22] = PZD 23
[23] = PZD 24
[24] = PZD 25
[25] = PZD 26
[26] = PZD 27
[27] = PZD 28
[28] = PZD 29
[29] = PZD 30
[30] = PZD 31
[31] = PZD 32

Dependency: Refer to: p2061

Notice: The parameter may be protected as a result of p0922 or p2079 and cannot be changed.

Note: IF1: Interface 1

r2053[0...9] IF1 PROFIdrive diagnostics PZD send word / IF1 diag send word

B_INF

Can be changed: -	**Calculated:** -	**Access level:** 3
Data type: Unsigned16	**Dynamic index:** -	**Func. diagram:** -
P-Group: Communications	**Units group:** -	**Unit selection:** -
Not for motor type: -	**Scaling:** -	**Expert list:** 1
Min	**Max**	**Factory setting**
-	-	-

Description: Displays the PZD (actual values) with word format sent to the PROFIdrive controller.

Index:
[0] = PZD 1
[1] = PZD 2
[2] = PZD 3
[3] = PZD 4
[4] = PZD 5
[5] = PZD 6
[6] = PZD 7
[7] = PZD 8
[8] = PZD 9
[9] = PZD 10

Bit field:

Bit	Signal name	1 signal	0 signal	FP
00	Bit 0	ON	OFF	-
01	Bit 1	ON	OFF	-
02	Bit 2	ON	OFF	-
03	Bit 3	ON	OFF	-
04	Bit 4	ON	OFF	-
05	Bit 5	ON	OFF	-
06	Bit 6	ON	OFF	-
07	Bit 7	ON	OFF	-

© Siemens AG 2012 All Rights Reserved

08	Bit 8	ON	OFF	-
09	Bit 9	ON	OFF	-
10	Bit 10	ON	OFF	-
11	Bit 11	ON	OFF	-
12	Bit 12	ON	OFF	-
13	Bit 13	ON	OFF	-
14	Bit 14	ON	OFF	-
15	Bit 15	ON	OFF	-

Note: IF1: Interface 1

r2053[0...24] IF1 PROFIdrive diagnostics PZD send word / IF1 diag send word

CU_G130_DP, CU_G130_PN, CU_G150_DP, CU_G150_PN

Can be changed: -	**Calculated:** -	**Access level:** 3
Data type: Unsigned16	**Dynamic index:** -	**Func. diagram:** -
P-Group: Communications	**Units group:** -	**Unit selection:** -
Not for motor type: -	**Scaling:** -	**Expert list:** 1
Min	**Max**	**Factory setting**
-	-	-

Description: Displays the PZD (actual values) with word format sent to the PROFIdrive controller.

Index:
[0] = PZD 1
[1] = PZD 2
[2] = PZD 3
[3] = PZD 4
[4] = PZD 5
[5] = PZD 6
[6] = PZD 7
[7] = PZD 8
[8] = PZD 9
[9] = PZD 10
[10] = PZD 11
[11] = PZD 12
[12] = PZD 13
[13] = PZD 14
[14] = PZD 15
[15] = PZD 16
[16] = PZD 17
[17] = PZD 18
[18] = PZD 19
[19] = PZD 20
[20] = PZD 21
[21] = PZD 22
[22] = PZD 23
[23] = PZD 24
[24] = PZD 25

Bit field:

Bit	Signal name	1 signal	0 signal	FP
00	Bit 0	ON	OFF	-
01	Bit 1	ON	OFF	-
02	Bit 2	ON	OFF	-
03	Bit 3	ON	OFF	-
04	Bit 4	ON	OFF	-
05	Bit 5	ON	OFF	-
06	Bit 6	ON	OFF	-
07	Bit 7	ON	OFF	-
08	Bit 8	ON	OFF	-
09	Bit 9	ON	OFF	-
10	Bit 10	ON	OFF	-
11	Bit 11	ON	OFF	-
12	Bit 12	ON	OFF	-
13	Bit 13	ON	OFF	-
14	Bit 14	ON	OFF	-
15	Bit 15	ON	OFF	-

© Siemens AG 2012 All Rights Reserved

Note: IF1: Interface 1

r2053[0...11] IF1 PROFIdrive diagnostics PZD send word / IF1 diag send word

ENC

Can be changed: -	**Calculated:** -	**Access level:** 3
Data type: Unsigned16	**Dynamic index:** -	**Func. diagram:** 2450, 2470
P-Group: Communications	**Units group:** -	**Unit selection:** -
Not for motor type: -	**Scaling:** -	**Expert list:** 1
Min	**Max**	**Factory setting**
-	-	-

Description: Displays the PZD (actual values) with word format sent to the PROFIdrive controller.

Index:
[0] = PZD 1
[1] = PZD 2
[2] = PZD 3
[3] = PZD 4
[4] = PZD 5
[5] = PZD 6
[6] = PZD 7
[7] = PZD 8
[8] = PZD 9
[9] = PZD 10
[10] = PZD 11
[11] = PZD 12

Bit field:

Bit	Signal name	1 signal	0 signal	FP
00	Bit 0	ON	OFF	-
01	Bit 1	ON	OFF	-
02	Bit 2	ON	OFF	-
03	Bit 3	ON	OFF	-
04	Bit 4	ON	OFF	-
05	Bit 5	ON	OFF	-
06	Bit 6	ON	OFF	-
07	Bit 7	ON	OFF	-
08	Bit 8	ON	OFF	-
09	Bit 9	ON	OFF	-
10	Bit 10	ON	OFF	-
11	Bit 11	ON	OFF	-
12	Bit 12	ON	OFF	-
13	Bit 13	ON	OFF	-
14	Bit 14	ON	OFF	-
15	Bit 15	ON	OFF	-

Dependency: Refer to: p2051, p2061

Note: IF1: Interface 1

r2053[0...4] IF1 PROFIdrive diagnostics PZD send word / IF1 diag send word

TB30, TM150, TM31

Can be changed: -	**Calculated:** -	**Access level:** 3
Data type: Unsigned16	**Dynamic index:** -	**Func. diagram:** -
P-Group: Communications	**Units group:** -	**Unit selection:** -
Not for motor type: -	**Scaling:** -	**Expert list:** 1
Min	**Max**	**Factory setting**
-	-	-

Description: Displays the PZD (actual values) with word format sent to the PROFIdrive controller.

Index:
[0] = PZD 1
[1] = PZD 2
[2] = PZD 3
[3] = PZD 4
[4] = PZD 5

© Siemens AG 2012 All Rights Reserved

Bit field:	Bit	Signal name	1 signal	0 signal	FP
	00	Bit 0	ON	OFF	-
	01	Bit 1	ON	OFF	-
	02	Bit 2	ON	OFF	-
	03	Bit 3	ON	OFF	-
	04	Bit 4	ON	OFF	-
	05	Bit 5	ON	OFF	-
	06	Bit 6	ON	OFF	-
	07	Bit 7	ON	OFF	-
	08	Bit 8	ON	OFF	-
	09	Bit 9	ON	OFF	-
	10	Bit 10	ON	OFF	-
	11	Bit 11	ON	OFF	-
	12	Bit 12	ON	OFF	-
	13	Bit 13	ON	OFF	-
	14	Bit 14	ON	OFF	-
	15	Bit 15	ON	OFF	-

Note: IF1: Interface 1

r2053[0...31] IF1 PROFIdrive diagnostics PZD send word / IF1 diag send word

VECTOR_G

Can be changed: -	**Calculated:** -	**Access level:** 3
Data type: Unsigned16	**Dynamic index:** -	**Func. diagram:** 2450, 2470
P-Group: Communications	**Units group:** -	**Unit selection:** -
Not for motor type: -	**Scaling:** -	**Expert list:** 1
Min	**Max**	**Factory setting**
-	-	-

Description: Displays the PZD (actual values) with word format sent to the PROFIdrive controller.

Index:
[0] = PZD 1
[1] = PZD 2
[2] = PZD 3
[3] = PZD 4
[4] = PZD 5
[5] = PZD 6
[6] = PZD 7
[7] = PZD 8
[8] = PZD 9
[9] = PZD 10
[10] = PZD 11
[11] = PZD 12
[12] = PZD 13
[13] = PZD 14
[14] = PZD 15
[15] = PZD 16
[16] = PZD 17
[17] = PZD 18
[18] = PZD 19
[19] = PZD 20
[20] = PZD 21
[21] = PZD 22
[22] = PZD 23
[23] = PZD 24
[24] = PZD 25
[25] = PZD 26
[26] = PZD 27
[27] = PZD 28
[28] = PZD 29
[29] = PZD 30
[30] = PZD 31
[31] = PZD 32

© Siemens AG 2012 All Rights Reserved

Bit field:	Bit	Signal name	1 signal	0 signal	FP
	00	Bit 0	ON	OFF	-
	01	Bit 1	ON	OFF	-
	02	Bit 2	ON	OFF	-
	03	Bit 3	ON	OFF	-
	04	Bit 4	ON	OFF	-
	05	Bit 5	ON	OFF	-
	06	Bit 6	ON	OFF	-
	07	Bit 7	ON	OFF	-
	08	Bit 8	ON	OFF	-
	09	Bit 9	ON	OFF	-
	10	Bit 10	ON	OFF	-
	11	Bit 11	ON	OFF	-
	12	Bit 12	ON	OFF	-
	13	Bit 13	ON	OFF	-
	14	Bit 14	ON	OFF	-
	15	Bit 15	ON	OFF	-

Dependency: Refer to: p2051, p2061

Note: IF1: Interface 1

r2054 PROFIBUS status / PB status

CU_G130_DP, CU_G150_DP

Can be changed: -	**Calculated:** -	**Access level:** 3
Data type: Integer16	**Dynamic index:** -	**Func. diagram:** 2410
P-Group: Communications	**Units group:** -	**Unit selection:** -
Not for motor type: -	**Scaling:** -	**Expert list:** 1
Min	**Max**	**Factory setting**
0	4	-

Description: Status display for the PROFIBUS interface.

Value:
0: OFF
1: No connection (search for baud rate)
2: Connection OK (baud rate found)
3: Cyclic connection with master (data exchange)
4: Cyclic data OK

Note: Re r2054 = 3:

In state 3 (the LED flashes green), a cyclic connection has been established to the PROFIBUS master; however, one of the following prerequisites is missing for cyclic operation:

- No setpoints are being received as the PROFIBUS master is in the STOP condition.

Only for clock-cycle synchronous operation, the following applies:

- The drive is not in synchronism as the global control (GC) has an error.

Re r2054 = 4:

In the status 4 (LED green), the cyclic connection to the PROFIBUS master has been established and setpoints are being received. The clock cycle synchronization is OK, the global control (GC) is error-free.

This state does not provide any statement regarding the quality of the clock cycle synchronous sign-of-life characters on the drive objects.

r2055[0...2] PROFIBUS diagnostics standard / PB diag standard

CU_G130_DP, CU_G150_DP

Can be changed: -	**Calculated:** -	**Access level:** 3
Data type: Unsigned16	**Dynamic index:** -	**Func. diagram:** 2410
P-Group: Communications	**Units group:** -	**Unit selection:** -
Not for motor type: -	**Scaling:** -	**Expert list:** 1
Min	**Max**	**Factory setting**
-	-	-

Description: Diagnostics display for the PROFIBUS interface.

Index:
[0] = Master bus address
[1] = Master input total length bytes
[2] = Master output total length bytes

© Siemens AG 2012 All Rights Reserved

r2057 PROFIBUS address switch diagnostics / PB addr_sw diag

CU_G130_DP, CU_G150_DP

Can be changed: -	**Calculated:** -	**Access level:** 3
Data type: Unsigned16	**Dynamic index:** -	**Func. diagram:** 2410
P-Group: Communications	**Units group:** -	**Unit selection:** -
Not for motor type: -	**Scaling:** -	**Expert list:** 1
Min	**Max**	**Factory setting**
-	-	-

Description: Displays the setting of the PROFIBUS address switch "DP ADDRESS" on the Control Unit.

Dependency: Refer to: p0918

r2060[0...2] CO: IF1 PROFIdrive PZD receive double word / IF1 PZD recv DW

ENC

Can be changed: -	**Calculated:** -	**Access level:** 3
Data type: Integer32	**Dynamic index:** -	**Func. diagram:** 2440, 2468
P-Group: Communications	**Units group:** -	**Unit selection:** -
Not for motor type: -	**Scaling:** 4000H	**Expert list:** 1
Min	**Max**	**Factory setting**
-	-	-

Description: Connector output to interconnect PZD (setpoints) with double word format received from the PROFIdrive controller.

Index:
[0] = PZD 1 + 2
[1] = PZD 2 + 3
[2] = PZD 3 + 4

Dependency: Refer to: r2050

Notice: Where there is a multiple interconnection of a connector output, all the connector inputs must either have Integer or FloatingPoint data types.
A BICO interconnection for a single PZD can only take place either on r2050 or r2060.

Note: IF1: Interface 1

r2060[0...30] CO: IF1 PROFIdrive PZD receive double word / IF1 PZD recv DW

VECTOR_G

Can be changed: -	**Calculated:** -	**Access level:** 3
Data type: Integer32	**Dynamic index:** -	**Func. diagram:** 2440, 2468
P-Group: Communications	**Units group:** -	**Unit selection:** -
Not for motor type: -	**Scaling:** 4000H	**Expert list:** 1
Min	**Max**	**Factory setting**
-	-	-

Description: Connector output to interconnect PZD (setpoints) with double word format received from the PROFIdrive controller.

Index:
[0] = PZD 1 + 2
[1] = PZD 2 + 3
[2] = PZD 3 + 4
[3] = PZD 4 + 5
[4] = PZD 5 + 6
[5] = PZD 6 + 7
[6] = PZD 7 + 8
[7] = PZD 8 + 9
[8] = PZD 9 + 10
[9] = PZD 10 + 11
[10] = PZD 11 + 12
[11] = PZD 12 + 13
[12] = PZD 13 + 14
[13] = PZD 14 + 15
[14] = PZD 15 + 16
[15] = PZD 16 + 17
[16] = PZD 17 + 18
[17] = PZD 18 + 19
[18] = PZD 19 + 20
[19] = PZD 20 + 21

© Siemens AG 2012 All Rights Reserved

[20] = PZD 21 + 22
[21] = PZD 22 + 23
[22] = PZD 23 + 24
[23] = PZD 24 + 25
[24] = PZD 25 + 26
[25] = PZD 26 + 27
[26] = PZD 27 + 28
[27] = PZD 28 + 29
[28] = PZD 29 + 30
[29] = PZD 30 + 31
[30] = PZD 31 + 32

Dependency: Refer to: r2050

Notice: Where there is a multiple interconnection of a connector output, all the connector inputs must either have Integer or FloatingPoint data types.
A BICO interconnection for a single PZD can only take place either on r2050 or r2060.
A maximum of 4 indices of the "trace" function can be used.

Note: IF1: Interface 1

p2061[0...10] CI: IF1 PROFIdrive PZD send double word / IF1 PZD send DW

ENC

Can be changed: U, T	**Calculated:** -	**Access level:** 3
Data type: Unsigned32 / Integer32	**Dynamic index:** -	**Func. diagram:** 2470
P-Group: Communications	**Units group:** -	**Unit selection:** -
Not for motor type: -	**Scaling:** 4000H	**Expert list:** 1
Min	**Max**	**Factory setting**
-	-	0

Description: Selects the PZD (actual values) with double word format to be sent to the PROFIdrive controller.

Index:
[0] = PZD 1 + 2
[1] = PZD 2 + 3
[2] = PZD 3 + 4
[3] = PZD 4 + 5
[4] = PZD 5 + 6
[5] = PZD 6 + 7
[6] = PZD 7 + 8
[7] = PZD 8 + 9
[8] = PZD 9 + 10
[9] = PZD 10 + 11
[10] = PZD 11 + 12

Dependency: Refer to: p2051

Notice: A BICO interconnection for a single PZD can only take place either on r2051 or r2061.
The parameter may be protected as a result of p0922 or p2079 and cannot be changed.

Note: IF1: Interface 1

p2061[0...30] CI: IF1 PROFIdrive PZD send double word / IF1 PZD send DW

VECTOR_G

Can be changed: U, T	**Calculated:** -	**Access level:** 3
Data type: Unsigned32 / Integer32	**Dynamic index:** -	**Func. diagram:** 2470
P-Group: Communications	**Units group:** -	**Unit selection:** -
Not for motor type: -	**Scaling:** 4000H	**Expert list:** 1
Min	**Max**	**Factory setting**
-	-	0

Description: Selects the PZD (actual values) with double word format to be sent to the PROFIdrive controller.

Index:
[0] = PZD 1 + 2
[1] = PZD 2 + 3
[2] = PZD 3 + 4
[3] = PZD 4 + 5
[4] = PZD 5 + 6
[5] = PZD 6 + 7
[6] = PZD 7 + 8

© Siemens AG 2012 All Rights Reserved

[7] = PZD 8 + 9
[8] = PZD 9 + 10
[9] = PZD 10 + 11
[10] = PZD 11 + 12
[11] = PZD 12 + 13
[12] = PZD 13 + 14
[13] = PZD 14 + 15
[14] = PZD 15 + 16
[15] = PZD 16 + 17
[16] = PZD 17 + 18
[17] = PZD 18 + 19
[18] = PZD 19 + 20
[19] = PZD 20 + 21
[20] = PZD 21 + 22
[21] = PZD 22 + 23
[22] = PZD 23 + 24
[23] = PZD 24 + 25
[24] = PZD 25 + 26
[25] = PZD 26 + 27
[26] = PZD 27 + 28
[27] = PZD 28 + 29
[28] = PZD 29 + 30
[29] = PZD 30 + 31
[30] = PZD 31 + 32

Dependency: Refer to: p2051

Notice: A BICO interconnection for a single PZD can only take place either on r2051 or r2061.
The parameter may be protected as a result of p0922 or p2079 and cannot be changed.

Note: IF1: Interface 1

r2063[0...10] IF1 PROFIdrive diagnostics PZD send double word / IF1 diag send DW

ENC

Can be changed: -	**Calculated:** -	**Access level:** 3
Data type: Unsigned32	**Dynamic index:** -	**Func. diagram:** 2450, 2470
P-Group: Communications	**Units group:** -	**Unit selection:** -
Not for motor type: -	**Scaling:** -	**Expert list:** 1
Min	**Max**	**Factory setting**
-	-	-

Description: Displays the PZD (actual values) with double word format sent to the PROFIdrive controller.

Index:
[0] = PZD 1 + 2
[1] = PZD 2 + 3
[2] = PZD 3 + 4
[3] = PZD 4 + 5
[4] = PZD 5 + 6
[5] = PZD 6 + 7
[6] = PZD 7 + 8
[7] = PZD 8 + 9
[8] = PZD 9 + 10
[9] = PZD 10 + 11
[10] = PZD 11 + 12

Bit field:

Bit	Signal name	1 signal	0 signal	FP
00	Bit 0	ON	OFF	-
01	Bit 1	ON	OFF	-
02	Bit 2	ON	OFF	-
03	Bit 3	ON	OFF	-
04	Bit 4	ON	OFF	-
05	Bit 5	ON	OFF	-
06	Bit 6	ON	OFF	-
07	Bit 7	ON	OFF	-
08	Bit 8	ON	OFF	-
09	Bit 9	ON	OFF	-
10	Bit 10	ON	OFF	-

© Siemens AG 2012 All Rights Reserved

11	Bit 11	ON	OFF	-
12	Bit 12	ON	OFF	-
13	Bit 13	ON	OFF	-
14	Bit 14	ON	OFF	-
15	Bit 15	ON	OFF	-
16	Bit 16	ON	OFF	-
17	Bit 17	ON	OFF	-
18	Bit 18	ON	OFF	-
19	Bit 19	ON	OFF	-
20	Bit 20	ON	OFF	-
21	Bit 21	ON	OFF	-
22	Bit 22	ON	OFF	-
23	Bit 23	ON	OFF	-
24	Bit 24	ON	OFF	-
25	Bit 25	ON	OFF	-
26	Bit 26	ON	OFF	-
27	Bit 27	ON	OFF	-
28	Bit 28	ON	OFF	-
29	Bit 29	ON	OFF	-
30	Bit 30	ON	OFF	-
31	Bit 31	ON	OFF	-

Notice: A maximum of 4 indices of the "trace" function can be used.

Note: IF1: Interface 1

r2063[0...30] IF1 PROFIdrive diagnostics PZD send double word / IF1 diag send DW

VECTOR_G

Can be changed: -	**Calculated:** -	**Access level:** 3
Data type: Unsigned32	**Dynamic index:** -	**Func. diagram:** 2450, 2470
P-Group: Communications	**Units group:** -	**Unit selection:** -
Not for motor type: -	**Scaling:** -	**Expert list:** 1
Min	**Max**	**Factory setting**
-	-	-

Description: Displays the PZD (actual values) with double word format sent to the PROFIdrive controller.

Index:
[0] = PZD 1 + 2
[1] = PZD 2 + 3
[2] = PZD 3 + 4
[3] = PZD 4 + 5
[4] = PZD 5 + 6
[5] = PZD 6 + 7
[6] = PZD 7 + 8
[7] = PZD 8 + 9
[8] = PZD 9 + 10
[9] = PZD 10 + 11
[10] = PZD 11 + 12
[11] = PZD 12 + 13
[12] = PZD 13 + 14
[13] = PZD 14 + 15
[14] = PZD 15 + 16
[15] = PZD 16 + 17
[16] = PZD 17 + 18
[17] = PZD 18 + 19
[18] = PZD 19 + 20
[19] = PZD 20 + 21
[20] = PZD 21 + 22
[21] = PZD 22 + 23
[22] = PZD 23 + 24
[23] = PZD 24 + 25
[24] = PZD 25 + 26
[25] = PZD 26 + 27
[26] = PZD 27 + 28
[27] = PZD 28 + 29
[28] = PZD 29 + 30

© Siemens AG 2012 All Rights Reserved

[29] = PZD 30 + 31
[30] = PZD 31 + 32

Bit field:

Bit	Signal name	1 signal	0 signal	FP
00	Bit 0	ON	OFF	-
01	Bit 1	ON	OFF	-
02	Bit 2	ON	OFF	-
03	Bit 3	ON	OFF	-
04	Bit 4	ON	OFF	-
05	Bit 5	ON	OFF	-
06	Bit 6	ON	OFF	-
07	Bit 7	ON	OFF	-
08	Bit 8	ON	OFF	-
09	Bit 9	ON	OFF	-
10	Bit 10	ON	OFF	-
11	Bit 11	ON	OFF	-
12	Bit 12	ON	OFF	-
13	Bit 13	ON	OFF	-
14	Bit 14	ON	OFF	-
15	Bit 15	ON	OFF	-
16	Bit 16	ON	OFF	-
17	Bit 17	ON	OFF	-
18	Bit 18	ON	OFF	-
19	Bit 19	ON	OFF	-
20	Bit 20	ON	OFF	-
21	Bit 21	ON	OFF	-
22	Bit 22	ON	OFF	-
23	Bit 23	ON	OFF	-
24	Bit 24	ON	OFF	-
25	Bit 25	ON	OFF	-
26	Bit 26	ON	OFF	-
27	Bit 27	ON	OFF	-
28	Bit 28	ON	OFF	-
29	Bit 29	ON	OFF	-
30	Bit 30	ON	OFF	-
31	Bit 31	ON	OFF	-

Notice: A maximum of 4 indices of the "trace" function can be used.

Note: IF1: Interface 1

r2064[0...7] PB/PN diagnostics clock cycle synchronism / PB/PN diag clock

CU_G130_DP, CU_G130_PN, CU_G150_DP, CU_G150_PN

Can be changed: -	**Calculated:** -	**Access level:** 3
Data type: Integer32	**Dynamic index:** -	**Func. diagram:** 2410
P-Group: Communications	**Units group:** -	**Unit selection:** -
Not for motor type: -	**Scaling:** -	**Expert list:** 1
Min	**Max**	**Factory setting**
-	-	-

Description: Displays the last parameter received from the PROFIBUS/PROFINET controller for clock synchronism.

The parameters for clock synchronism are created when configuring the bus and are transferred at the start of cyclic operation from the controller to the device.

Index:
[0] = Clock synchronous mode activated
[1] = Bus cycle time (Tdp) [µs]
[2] = Master cycle time (Tmapc) [µs]
[3] = Instant of actual value acquisition (Ti) [µs]
[4] = Instant of setpoint acquisition (To) [µs]
[5] = Data exchange interval (Tdx) [µs]
[6] = PLL window (Tpll-w) [1/12 µs]
[7] = PLL delay time (Tpll-d) [1/12 µs]

© Siemens AG 2012 All Rights Reserved

r2065 PB/PN controller sign of life diagnostics / PB/PN ctr SoL diag

ENC, VECTOR_G (n/M)

Can be changed: -	**Calculated:** -	**Access level:** 3
Data type: Unsigned16	**Dynamic index:** -	**Func. diagram:** 2410
P-Group: Communications	**Units group:** -	**Unit selection:** -
Not for motor type: -	**Scaling:** -	**Expert list:** 1
Min	**Max**	**Factory setting**
-	-	-

Description: Displays how often the sign-of-life from the clock synchronous PROFIBUS/PROFINET controller last failed.
An appropriate fault is output when the tolerance, specified in p0925, is exceeded.

Dependency: Refer to: F01912

r2067[0...1] IF1 PZD maximum interconnected / IF1 PZDmaxIntercon

B_INF, CU_G130_DP, CU_G130_PN, CU_G150_DP, CU_G150_PN, ENC, TB30, TM150, TM31, VECTOR_G

Can be changed: -	**Calculated:** -	**Access level:** 3
Data type: Unsigned16	**Dynamic index:** -	**Func. diagram:** -
P-Group: Communications	**Units group:** -	**Unit selection:** -
Not for motor type: -	**Scaling:** -	**Expert list:** 1
Min	**Max**	**Factory setting**
-	-	-

Description: Display for the maximum interconnected PZD in the receive/send direction
Index 0: receive (r2050, r2060)
Index 1: send (p2051, p2061)

r2074[0...9] IF1 PROFIdrive diagnostics bus address PZD receive / IF1diag addr recv

B_INF

Can be changed: -	**Calculated:** -	**Access level:** 3
Data type: Unsigned16	**Dynamic index:** -	**Func. diagram:** -
P-Group: Communications	**Units group:** -	**Unit selection:** -
Not for motor type: -	**Scaling:** -	**Expert list:** 1
Min	**Max**	**Factory setting**
-	-	-

Description: Displays the PROFIBUS address of the sender from which the process data (PZD) is received.

Index:
[0] = PZD 1
[1] = PZD 2
[2] = PZD 3
[3] = PZD 4
[4] = PZD 5
[5] = PZD 6
[6] = PZD 7
[7] = PZD 8
[8] = PZD 9
[9] = PZD 10

Note: IF1: Interface 1
Value range:
0 - 125: Bus address of the sender
65535: not assigned

© Siemens AG 2012 All Rights Reserved

r2074[0...19] IF1 PROFIdrive diagnostics bus address PZD receive / IF1diag addr recv

CU_G130_DP, CU_G130_PN, CU_G150_DP, CU_G150_PN	**Can be changed:** -	**Calculated:** -	**Access level:** 3
	Data type: Unsigned16	**Dynamic index:** -	**Func. diagram:** -
	P-Group: Communications	**Units group:** -	**Unit selection:** -
	Not for motor type: -	**Scaling:** -	**Expert list:** 1
	Min	**Max**	**Factory setting**
	-	-	-

Description: Displays the PROFIBUS address of the sender from which the process data (PZD) is received.

Index:
[0] = PZD 1
[1] = PZD 2
[2] = PZD 3
[3] = PZD 4
[4] = PZD 5
[5] = PZD 6
[6] = PZD 7
[7] = PZD 8
[8] = PZD 9
[9] = PZD 10
[10] = PZD 11
[11] = PZD 12
[12] = PZD 13
[13] = PZD 14
[14] = PZD 15
[15] = PZD 16
[16] = PZD 17
[17] = PZD 18
[18] = PZD 19
[19] = PZD 20

Note: IF1: Interface 1

Value range:

0 - 125: Bus address of the sender

65535: not assigned

r2074[0...3] IF1 PROFIdrive diagnostics bus address PZD receive / IF1diag addr recv

ENC	**Can be changed:** -	**Calculated:** -	**Access level:** 3
	Data type: Unsigned16	**Dynamic index:** -	**Func. diagram:** -
	P-Group: Communications	**Units group:** -	**Unit selection:** -
	Not for motor type: -	**Scaling:** -	**Expert list:** 1
	Min	**Max**	**Factory setting**
	-	-	-

Description: Displays the PROFIBUS address of the sender from which the process data (PZD) is received.

Index:
[0] = PZD 1
[1] = PZD 2
[2] = PZD 3
[3] = PZD 4

Note: IF1: Interface 1

Value range:

0 - 125: Bus address of the sender

65535: not assigned

© Siemens AG 2012 All Rights Reserved

r2074[0...4] IF1 PROFIdrive diagnostics bus address PZD receive / IF1diag addr recv

TB30, TM150, TM31	**Can be changed:** -	**Calculated:** -	**Access level:** 3
	Data type: Unsigned16	**Dynamic index:** -	**Func. diagram:** -
	P-Group: Communications	**Units group:** -	**Unit selection:** -
	Not for motor type: -	**Scaling:** -	**Expert list:** 1
	Min	**Max**	**Factory setting**
	-	-	-

Description: Displays the PROFIBUS address of the sender from which the process data (PZD) is received.

Index:
[0] = PZD 1
[1] = PZD 2
[2] = PZD 3
[3] = PZD 4
[4] = PZD 5

Note: IF1: Interface 1

Value range:

0 - 125: Bus address of the sender

65535: not assigned

r2074[0...31] IF1 PROFIdrive diagnostics bus address PZD receive / IF1diag addr recv

VECTOR_G	**Can be changed:** -	**Calculated:** -	**Access level:** 3
	Data type: Unsigned16	**Dynamic index:** -	**Func. diagram:** -
	P-Group: Communications	**Units group:** -	**Unit selection:** -
	Not for motor type: -	**Scaling:** -	**Expert list:** 1
	Min	**Max**	**Factory setting**
	-	-	-

Description: Displays the PROFIBUS address of the sender from which the process data (PZD) is received.

Index:
[0] = PZD 1
[1] = PZD 2
[2] = PZD 3
[3] = PZD 4
[4] = PZD 5
[5] = PZD 6
[6] = PZD 7
[7] = PZD 8
[8] = PZD 9
[9] = PZD 10
[10] = PZD 11
[11] = PZD 12
[12] = PZD 13
[13] = PZD 14
[14] = PZD 15
[15] = PZD 16
[16] = PZD 17
[17] = PZD 18
[18] = PZD 19
[19] = PZD 20
[20] = PZD 21
[21] = PZD 22
[22] = PZD 23
[23] = PZD 24
[24] = PZD 25
[25] = PZD 26
[26] = PZD 27
[27] = PZD 28
[28] = PZD 29
[29] = PZD 30
[30] = PZD 31
[31] = PZD 32

© Siemens AG 2012 All Rights Reserved

Note: IF1: Interface 1
Value range:
0 - 125: Bus address of the sender
65535: not assigned

r2075[0...9] IF1 PROFIdrive diagnostics telegram offset PZD receive / IF1 diag offs recv

B_INF

Can be changed: -	**Calculated:** -	**Access level:** 3
Data type: Unsigned16	**Dynamic index:** -	**Func. diagram:** -
P-Group: Communications	**Units group:** -	**Unit selection:** -
Not for motor type: -	**Scaling:** -	**Expert list:** 1
Min	**Max**	**Factory setting**
-	-	-

Description: Displays the PZD byte offset in the PROFIdrive receive telegram (controller output).

Index:
[0] = PZD 1
[1] = PZD 2
[2] = PZD 3
[3] = PZD 4
[4] = PZD 5
[5] = PZD 6
[6] = PZD 7
[7] = PZD 8
[8] = PZD 9
[9] = PZD 10

Note: IF1: Interface 1
Value range:
0 - 242: Byte offset
65535: not assigned

r2075[0...19] IF1 PROFIdrive diagnostics telegram offset PZD receive / IF1 diag offs recv

CU_G130_DP, CU_G130_PN, CU_G150_DP, CU_G150_PN

Can be changed: -	**Calculated:** -	**Access level:** 3
Data type: Unsigned16	**Dynamic index:** -	**Func. diagram:** -
P-Group: Communications	**Units group:** -	**Unit selection:** -
Not for motor type: -	**Scaling:** -	**Expert list:** 1
Min	**Max**	**Factory setting**
-	-	-

Description: Displays the PZD byte offset in the PROFIdrive receive telegram (controller output).

Index:
[0] = PZD 1
[1] = PZD 2
[2] = PZD 3
[3] = PZD 4
[4] = PZD 5
[5] = PZD 6
[6] = PZD 7
[7] = PZD 8
[8] = PZD 9
[9] = PZD 10
[10] = PZD 11
[11] = PZD 12
[12] = PZD 13
[13] = PZD 14
[14] = PZD 15
[15] = PZD 16
[16] = PZD 17
[17] = PZD 18
[18] = PZD 19
[19] = PZD 20

© Siemens AG 2012 All Rights Reserved

Note: IF1: Interface 1
Value range:
0 - 242: Byte offset
65535: not assigned

r2075[0...3] IF1 PROFIdrive diagnostics telegram offset PZD receive / IF1 diag offs recv

ENC

Can be changed: -	**Calculated:** -	**Access level:** 3
Data type: Unsigned16	**Dynamic index:** -	**Func. diagram:** -
P-Group: Communications	**Units group:** -	**Unit selection:** -
Not for motor type: -	**Scaling:** -	**Expert list:** 1
Min	**Max**	**Factory setting**
-	-	-

Description: Displays the PZD byte offset in the PROFIdrive receive telegram (controller output).

Index:
[0] = PZD 1
[1] = PZD 2
[2] = PZD 3
[3] = PZD 4

Note: IF1: Interface 1
Value range:
0 - 242: Byte offset
65535: not assigned

r2075[0...4] IF1 PROFIdrive diagnostics telegram offset PZD receive / IF1 diag offs recv

TB30, TM150, TM31

Can be changed: -	**Calculated:** -	**Access level:** 3
Data type: Unsigned16	**Dynamic index:** -	**Func. diagram:** -
P-Group: Communications	**Units group:** -	**Unit selection:** -
Not for motor type: -	**Scaling:** -	**Expert list:** 1
Min	**Max**	**Factory setting**
-	-	-

Description: Displays the PZD byte offset in the PROFIdrive receive telegram (controller output).

Index:
[0] = PZD 1
[1] = PZD 2
[2] = PZD 3
[3] = PZD 4
[4] = PZD 5

Note: IF1: Interface 1
Value range:
0 - 242: Byte offset
65535: not assigned

r2075[0...31] IF1 PROFIdrive diagnostics telegram offset PZD receive / IF1 diag offs recv

VECTOR_G

Can be changed: -	**Calculated:** -	**Access level:** 3
Data type: Unsigned16	**Dynamic index:** -	**Func. diagram:** -
P-Group: Communications	**Units group:** -	**Unit selection:** -
Not for motor type: -	**Scaling:** -	**Expert list:** 1
Min	**Max**	**Factory setting**
-	-	-

Description: Displays the PZD byte offset in the PROFIdrive receive telegram (controller output).

Index:
[0] = PZD 1
[1] = PZD 2
[2] = PZD 3
[3] = PZD 4
[4] = PZD 5
[5] = PZD 6
[6] = PZD 7

© Siemens AG 2012 All Rights Reserved

[7] = PZD 8
[8] = PZD 9
[9] = PZD 10
[10] = PZD 11
[11] = PZD 12
[12] = PZD 13
[13] = PZD 14
[14] = PZD 15
[15] = PZD 16
[16] = PZD 17
[17] = PZD 18
[18] = PZD 19
[19] = PZD 20
[20] = PZD 21
[21] = PZD 22
[22] = PZD 23
[23] = PZD 24
[24] = PZD 25
[25] = PZD 26
[26] = PZD 27
[27] = PZD 28
[28] = PZD 29
[29] = PZD 30
[30] = PZD 31
[31] = PZD 32

Note: IF1: Interface 1
Value range:
0 - 242: Byte offset
65535: not assigned

r2076[0...9] IF1 PROFIdrive diagnostics telegram offset PZD send / IF1 diag offs send

B_INF

Can be changed: -	**Calculated:** -	**Access level:** 3
Data type: Unsigned16	**Dynamic index:** -	**Func. diagram:** -
P-Group: Communications	**Units group:** -	**Unit selection:** -
Not for motor type: -	**Scaling:** -	**Expert list:** 1
Min	**Max**	**Factory setting**
-	-	-

Description: Displays the PZD byte offset in the PROFIdrive send telegram (controller input).

Index:
[0] = PZD 1
[1] = PZD 2
[2] = PZD 3
[3] = PZD 4
[4] = PZD 5
[5] = PZD 6
[6] = PZD 7
[7] = PZD 8
[8] = PZD 9
[9] = PZD 10

Note: IF1: Interface 1
Value range:
0 - 242: Byte offset
65535: not assigned

© Siemens AG 2012 All Rights Reserved

r2076[0...24] IF1 PROFIdrive diagnostics telegram offset PZD send / IF1 diag offs send

CU_G130_DP, CU_G130_PN, CU_G150_DP, CU_G150_PN	**Can be changed:** -	**Calculated:** -	**Access level:** 3
	Data type: Unsigned16	**Dynamic index:** -	**Func. diagram:** -
	P-Group: Communications	**Units group:** -	**Unit selection:** -
	Not for motor type: -	**Scaling:** -	**Expert list:** 1
	Min	**Max**	**Factory setting**
	-	-	-

Description: Displays the PZD byte offset in the PROFIdrive send telegram (controller input).

Index:
[0] = PZD 1
[1] = PZD 2
[2] = PZD 3
[3] = PZD 4
[4] = PZD 5
[5] = PZD 6
[6] = PZD 7
[7] = PZD 8
[8] = PZD 9
[9] = PZD 10
[10] = PZD 11
[11] = PZD 12
[12] = PZD 13
[13] = PZD 14
[14] = PZD 15
[15] = PZD 16
[16] = PZD 17
[17] = PZD 18
[18] = PZD 19
[19] = PZD 20
[20] = PZD 21
[21] = PZD 22
[22] = PZD 23
[23] = PZD 24
[24] = PZD 25

Note: IF1: Interface 1
Value range:
0 - 242: Byte offset
65535: not assigned

r2076[0...11] IF1 PROFIdrive diagnostics telegram offset PZD send / IF1 diag offs send

ENC	**Can be changed:** -	**Calculated:** -	**Access level:** 3
	Data type: Unsigned16	**Dynamic index:** -	**Func. diagram:** -
	P-Group: Communications	**Units group:** -	**Unit selection:** -
	Not for motor type: -	**Scaling:** -	**Expert list:** 1
	Min	**Max**	**Factory setting**
	-	-	-

Description: Displays the PZD byte offset in the PROFIdrive send telegram (controller input).

Index:
[0] = PZD 1
[1] = PZD 2
[2] = PZD 3
[3] = PZD 4
[4] = PZD 5
[5] = PZD 6
[6] = PZD 7
[7] = PZD 8
[8] = PZD 9
[9] = PZD 10
[10] = PZD 11
[11] = PZD 12

© Siemens AG 2012 All Rights Reserved

Note: IF1: Interface 1
Value range:
0 - 242: Byte offset
65535: not assigned

r2076[0...4] IF1 PROFIdrive diagnostics telegram offset PZD send / IF1 diag offs send

TB30, TM150, TM31

Can be changed: -	**Calculated:** -	**Access level:** 3
Data type: Unsigned16	**Dynamic index:** -	**Func. diagram:** -
P-Group: Communications	**Units group:** -	**Unit selection:** -
Not for motor type: -	**Scaling:** -	**Expert list:** 1
Min	**Max**	**Factory setting**
-	-	-

Description: Displays the PZD byte offset in the PROFIdrive send telegram (controller input).

Index:
[0] = PZD 1
[1] = PZD 2
[2] = PZD 3
[3] = PZD 4
[4] = PZD 5

Note: IF1: Interface 1
Value range:
0 - 242: Byte offset
65535: not assigned

r2076[0...31] IF1 PROFIdrive diagnostics telegram offset PZD send / IF1 diag offs send

VECTOR_G

Can be changed: -	**Calculated:** -	**Access level:** 3
Data type: Unsigned16	**Dynamic index:** -	**Func. diagram:** -
P-Group: Communications	**Units group:** -	**Unit selection:** -
Not for motor type: -	**Scaling:** -	**Expert list:** 1
Min	**Max**	**Factory setting**
-	-	-

Description: Displays the PZD byte offset in the PROFIdrive send telegram (controller input).

Index:
[0] = PZD 1
[1] = PZD 2
[2] = PZD 3
[3] = PZD 4
[4] = PZD 5
[5] = PZD 6
[6] = PZD 7
[7] = PZD 8
[8] = PZD 9
[9] = PZD 10
[10] = PZD 11
[11] = PZD 12
[12] = PZD 13
[13] = PZD 14
[14] = PZD 15
[15] = PZD 16
[16] = PZD 17
[17] = PZD 18
[18] = PZD 19
[19] = PZD 20
[20] = PZD 21
[21] = PZD 22
[22] = PZD 23
[23] = PZD 24
[24] = PZD 25
[25] = PZD 26
[26] = PZD 27

© Siemens AG 2012 All Rights Reserved

[27] = PZD 28
[28] = PZD 29
[29] = PZD 30
[30] = PZD 31
[31] = PZD 32

Note: IF1: Interface 1
Value range:
0 - 242: Byte offset
65535: not assigned

r2077[0...15] PROFIBUS diagnostics peer-to-peer data transfer addresses / PB diag peer addr

CU_G130_DP, CU_G130_PN, CU_G150_DP, CU_G150_PN

Can be changed: -	**Calculated:** -	**Access level:** 3
Data type: Unsigned8	**Dynamic index:** -	**Func. diagram:** -
P-Group: -	**Units group:** -	**Unit selection:** -
Not for motor type: -	**Scaling:** -	**Expert list:** 1
Min	**Max**	**Factory setting**
-	-	-

Description: Displays the addresses of the slaves (peers) where peer-to-peer data transfer has been configured via PROFIBUS.

p2079 IF1 PROFIdrive PZD telegram selection extended / IF1 PD PZD tel ext

B_INF

Can be changed: T	**Calculated:** -	**Access level:** 3
Data type: Integer16	**Dynamic index:** -	**Func. diagram:** -
P-Group: Communications	**Units group:** -	**Unit selection:** -
Not for motor type: -	**Scaling:** -	**Expert list:** 1
Min	**Max**	**Factory setting**
370	999	999

Description: Sets the send and receive telegram.
Contrary to p0922, a telegram can be selected using p2079 and subsequently expanded.
For p0922 < 999 the following applies:
p2079 has the same value and is inhibited. All of the interconnections and extensions contained in the telegram are inhibited.
For p0922 = 999 the following applies:
p2079 can be freely set. If p2079 is also set to 999, then all of the interconnections can be set.
For p0922 = 999 and p2079 < 999 the following applies:
The interconnections contained in the telegram are inhibited. However, the telegram can be extended.

Value:
370: SIEMENS telegram 370, PZD-1/1
371: SIEMENS telegram 371, PZD-5/8
999: Free telegram configuration with BICO

Dependency: Refer to: p0922

p2079 IF1 PROFIdrive PZD telegram selection extended / IF1 PD PZD tel ext

CU_G130_DP, CU_G130_PN, CU_G150_DP, CU_G150_PN

Can be changed: T	**Calculated:** -	**Access level:** 3
Data type: Integer16	**Dynamic index:** -	**Func. diagram:** -
P-Group: Communications	**Units group:** -	**Unit selection:** -
Not for motor type: -	**Scaling:** -	**Expert list:** 1
Min	**Max**	**Factory setting**
390	999	999

Description: Sets the send and receive telegram.
Contrary to p0922, a telegram can be selected using p2079 and subsequently expanded.
For p0922 < 999 the following applies:
p2079 has the same value and is inhibited. All of the interconnections and extensions contained in the telegram are inhibited.
For p0922 = 999 the following applies:
p2079 can be freely set. If p2079 is also set to 999, then all of the interconnections can be set.

© Siemens AG 2012 All Rights Reserved

For p0922 = 999 and p2079 < 999 the following applies:

The interconnections contained in the telegram are inhibited. However, the telegram can be extended.

Value:
390: SIEMENS telegram 390, PZD-2/2
391: SIEMENS telegram 391, PZD-3/7
392: SIEMENS telegram 392, PZD-3/15
393: SIEMENS telegram 393, PZD-4/21
394: SIEMENS telegram 394, PZD-3/3
395: SIEMENS telegram 395, PZD-4/25
999: Free telegram configuration with BICO

p2079 IF1 PROFIdrive PZD telegram selection extended / IF1 PD PZD tel ext

ENC

Can be changed: T	**Calculated:** -	**Access level:** 3
Data type: Integer16	**Dynamic index:** -	**Func. diagram:** -
P-Group: Communications	**Units group:** -	**Unit selection:** -
Not for motor type: -	**Scaling:** -	**Expert list:** 1
Min	**Max**	**Factory setting**
81	999	999

Description:
Sets the send and receive telegram.

Contrary to p0922, a telegram can be selected using p2079 and subsequently expanded.

For p0922 < 999 the following applies:

p2079 has the same value and is inhibited. All of the interconnections and extensions contained in the telegram are inhibited.

For p0922 = 999 the following applies:

p2079 can be freely set. If p2079 is also set to 999, then all of the interconnections can be set.

For p0922 = 999 and p2079 < 999 the following applies:

The interconnections contained in the telegram are inhibited. However, the telegram can be extended.

Value:
81: SIEMENS telegram 81, PZD-2/6
82: SIEMENS telegram 82, PZD-2/7
83: SIEMENS telegram 83, PZD-2/8
999: Free telegram configuration with BICO

Dependency:
Refer to: p0922

p2079 IF1 PROFIdrive PZD telegram selection extended / IF1 PD PZD tel ext

VECTOR_G

Can be changed: T	**Calculated:** -	**Access level:** 3
Data type: Integer16	**Dynamic index:** -	**Func. diagram:** -
P-Group: Communications	**Units group:** -	**Unit selection:** -
Not for motor type: -	**Scaling:** -	**Expert list:** 1
Min	**Max**	**Factory setting**
1	999	999

Description:
Sets the send and receive telegram.

Contrary to p0922, a telegram can be selected using p2079 and subsequently expanded.

For p0922 < 999 the following applies:

p2079 has the same value and is inhibited. All of the interconnections and extensions contained in the telegram are inhibited.

For p0922 = 999 the following applies:

p2079 can be freely set. If p2079 is also set to 999, then all of the interconnections can be set.

For p0922 = 999 and p2079 < 999 the following applies:

The interconnections contained in the telegram are inhibited. However, the telegram can be extended.

Value:
1: Standard telegram 1, PZD-2/2
2: Standard telegram 2, PZD-4/4
20: Standard telegram 20, PZD-2/6
220: SIEMENS telegram 220, PZD-10/10
352: SIEMENS telegram 352, PZD-6/6
999: Free telegram configuration with BICO

Dependency:
Refer to: p0922

© Siemens AG 2012 All Rights Reserved

p2079 IF1 PROFIdrive PZD telegram selection extended / IF1 PD PZD tel ext

VECTOR_G (n/M)	**Can be changed:** T	**Calculated:** -	**Access level:** 3
	Data type: Integer16	**Dynamic index:** -	**Func. diagram:** -
	P-Group: Communications	**Units group:** -	**Unit selection:** -
	Not for motor type: -	**Scaling:** -	**Expert list:** 1
	Min	**Max**	**Factory setting**
	1	999	999

Description:
Sets the send and receive telegram.
Contrary to p0922, a telegram can be selected using p2079 and subsequently expanded.
For p0922 < 999 the following applies:
p2079 has the same value and is inhibited. All of the interconnections and extensions contained in the telegram are inhibited.
For p0922 = 999 the following applies:
p2079 can be freely set. If p2079 is also set to 999, then all of the interconnections can be set.
For p0922 = 999 and p2079 < 999 the following applies:
The interconnections contained in the telegram are inhibited. However, the telegram can be extended.

Value:
1: Standard telegram 1, PZD-2/2
2: Standard telegram 2, PZD-4/4
3: Standard telegram 3, PZD-5/9
4: Standard telegram 4, PZD-6/14
20: Standard telegram 20, PZD-2/6
220: SIEMENS telegram 220, PZD-10/10
352: SIEMENS telegram 352, PZD-6/6
999: Free telegram configuration with BICO

Dependency:
Refer to: p0922

p2080[0...15] BI: Binector-connector converter status word 1 / Bin/con ZSW1

B_INF, CU_G130_DP, CU_G130_PN, CU_G150_DP, CU_G150_PN, ENC, TB30, TM150, TM31, VECTOR_G	**Can be changed:** U, T	**Calculated:** -	**Access level:** 3
	Data type: Unsigned32 / Binary	**Dynamic index:** -	**Func. diagram:** 2472
	P-Group: Communications	**Units group:** -	**Unit selection:** -
	Not for motor type: -	**Scaling:** -	**Expert list:** 1
	Min	**Max**	**Factory setting**
	-	-	0

Description:
Selects bits to be sent to the PROFIdrive controller.
The individual bits are combined to form status word 1.

Index:
[0] = Bit 0
[1] = Bit 1
[2] = Bit 2
[3] = Bit 3
[4] = Bit 4
[5] = Bit 5
[6] = Bit 6
[7] = Bit 7
[8] = Bit 8
[9] = Bit 9
[10] = Bit 10
[11] = Bit 11
[12] = Bit 12
[13] = Bit 13
[14] = Bit 14
[15] = Bit 15

Dependency:
Refer to: p2088, r2089

Notice:
The parameter may be protected as a result of p0922 or p2079 and cannot be changed.

© Siemens AG 2012 All Rights Reserved

p2081[0...15] BI: Binector-connector converter status word 2 / Bin/con ZSW2

B_INF, CU_G130_DP, CU_G130_PN, CU_G150_DP, CU_G150_PN, ENC, TB30, TM150, TM31, VECTOR_G	**Can be changed:** U, T	**Calculated:** -	**Access level:** 3
	Data type: Unsigned32 / Binary	**Dynamic index:** -	**Func. diagram:** 2472
	P-Group: Communications	**Units group:** -	**Unit selection:** -
	Not for motor type: -	**Scaling:** -	**Expert list:** 1

Min	Max	Factory setting
-	-	0

Description: Selects bits to be sent to the PROFIdrive controller.
The individual bits are combined to form status word 2.

Index:
[0] = Bit 0
[1] = Bit 1
[2] = Bit 2
[3] = Bit 3
[4] = Bit 4
[5] = Bit 5
[6] = Bit 6
[7] = Bit 7
[8] = Bit 8
[9] = Bit 9
[10] = Bit 10
[11] = Bit 11
[12] = Bit 12
[13] = Bit 13
[14] = Bit 14
[15] = Bit 15

Dependency: Refer to: p2088, r2089

Notice: The parameter may be protected as a result of p0922 or p2079 and cannot be changed.

Note: For clock synchronous operation, bit 12 to 15 to transfer the sign-of-life are reserved in status word 2 - and may not be freely interconnected.

p2082[0...15] BI: Binector-connector converter status word 3 / Bin/con ZSW3

B_INF, CU_G130_DP, CU_G130_PN, CU_G150_DP, CU_G150_PN, ENC, TB30, TM150, TM31, VECTOR_G	**Can be changed:** U, T	**Calculated:** -	**Access level:** 3
	Data type: Unsigned32 / Binary	**Dynamic index:** -	**Func. diagram:** 2472
	P-Group: Communications	**Units group:** -	**Unit selection:** -
	Not for motor type: -	**Scaling:** -	**Expert list:** 1

Min	Max	Factory setting
-	-	0

Description: Selects bits to be sent to the PROFIdrive controller.
The individual bits are combined to form free status word 3.

Index:
[0] = Bit 0
[1] = Bit 1
[2] = Bit 2
[3] = Bit 3
[4] = Bit 4
[5] = Bit 5
[6] = Bit 6
[7] = Bit 7
[8] = Bit 8
[9] = Bit 9
[10] = Bit 10
[11] = Bit 11
[12] = Bit 12
[13] = Bit 13

© Siemens AG 2012 All Rights Reserved

[14] = Bit 14
[15] = Bit 15

Dependency: Refer to: p2088, r2089

Notice: The parameter may be protected as a result of p0922 or p2079 and cannot be changed.

p2083[0...15] BI: Binector-connector converter status word 4 / Bin/con ZSW4

B_INF, CU_G130_DP, CU_G130_PN, CU_G150_DP, CU_G150_PN, ENC, TB30, TM150, TM31, VECTOR_G	**Can be changed:** U, T	**Calculated:** -	**Access level:** 3
	Data type: Unsigned32 / Binary	**Dynamic index:** -	**Func. diagram:** 2472
	P-Group: Communications	**Units group:** -	**Unit selection:** -
	Not for motor type: -	**Scaling:** -	**Expert list:** 1

Min	Max	Factory setting
-	-	0

Description: Selects bits to be sent to the PROFIdrive controller.
The individual bits are combined to form free status word 4.

Index:
[0] = Bit 0
[1] = Bit 1
[2] = Bit 2
[3] = Bit 3
[4] = Bit 4
[5] = Bit 5
[6] = Bit 6
[7] = Bit 7
[8] = Bit 8
[9] = Bit 9
[10] = Bit 10
[11] = Bit 11
[12] = Bit 12
[13] = Bit 13
[14] = Bit 14
[15] = Bit 15

Dependency: Refer to: p2088, r2089

p2084[0...15] BI: Binector-connector converter status word 5 / Bin/con ZSW5

B_INF, CU_G130_DP, CU_G130_PN, CU_G150_DP, CU_G150_PN, ENC, TB30, TM150, TM31, VECTOR_G	**Can be changed:** U, T	**Calculated:** -	**Access level:** 3
	Data type: Unsigned32 / Binary	**Dynamic index:** -	**Func. diagram:** 2472
	P-Group: Communications	**Units group:** -	**Unit selection:** -
	Not for motor type: -	**Scaling:** -	**Expert list:** 1

Min	Max	Factory setting
-	-	0

Description: Selects bits to be sent to the PROFIdrive controller.
The individual bits are combined to form free status word 5.

Index:
[0] = Bit 0
[1] = Bit 1
[2] = Bit 2
[3] = Bit 3
[4] = Bit 4
[5] = Bit 5
[6] = Bit 6
[7] = Bit 7
[8] = Bit 8
[9] = Bit 9
[10] = Bit 10
[11] = Bit 11
[12] = Bit 12

© Siemens AG 2012 All Rights Reserved

[13] = Bit 13
[14] = Bit 14
[15] = Bit 15

Dependency: Refer to: p2088, r2089

p2088[0...4] Invert binector-connector converter status word / Bin/con ZSW inv

B_INF, CU_G130_DP, CU_G130_PN, CU_G150_DP, CU_G150_PN, ENC, TB30, TM150, TM31, VECTOR_G

Can be changed: U, T | **Calculated:** - | **Access level:** 3
Data type: Unsigned16 | **Dynamic index:** - | **Func. diagram:** 2472
P-Group: Communications | **Units group:** - | **Unit selection:** -
Not for motor type: - | **Scaling:** - | **Expert list:** 1

Min	Max	Factory setting
-	-	0000 0000 0000 0000 bin

Description: Setting to invert the individual binector inputs of the binector connector converter.

Index:
[0] = Status word 1
[1] = Status word 2
[2] = Free status word 3
[3] = Free status word 4
[4] = Free status word 5

Bit field:

Bit	Signal name	1 signal	0 signal	FP
00	Bit 0	Inverted	Not inverted	-
01	Bit 1	Inverted	Not inverted	-
02	Bit 2	Inverted	Not inverted	-
03	Bit 3	Inverted	Not inverted	-
04	Bit 4	Inverted	Not inverted	-
05	Bit 5	Inverted	Not inverted	-
06	Bit 6	Inverted	Not inverted	-
07	Bit 7	Inverted	Not inverted	-
08	Bit 8	Inverted	Not inverted	-
09	Bit 9	Inverted	Not inverted	-
10	Bit 10	Inverted	Not inverted	-
11	Bit 11	Inverted	Not inverted	-
12	Bit 12	Inverted	Not inverted	-
13	Bit 13	Inverted	Not inverted	-
14	Bit 14	Inverted	Not inverted	-
15	Bit 15	Inverted	Not inverted	-

Dependency: Refer to: p2080, p2081, p2082, p2083, r2089

r2089[0...4] CO: Send binector-connector converter status word / Bin/con ZSW send

B_INF, CU_G130_DP, CU_G130_PN, CU_G150_DP, CU_G150_PN, ENC, TB30, TM150, TM31, VECTOR_G

Can be changed: - | **Calculated:** - | **Access level:** 3
Data type: Unsigned16 | **Dynamic index:** - | **Func. diagram:** 2472
P-Group: Communications | **Units group:** - | **Unit selection:** -
Not for motor type: - | **Scaling:** - | **Expert list:** 1

Min	Max	Factory setting
-	-	-

Description: Connector output to interconnect the status words to a PZD send word.

Index:
[0] = Status word 1
[1] = Status word 2
[2] = Free status word 3
[3] = Free status word 4
[4] = Free status word 5

Bit field:

Bit	Signal name	1 signal	0 signal	FP
00	Bit 0	ON	OFF	-
01	Bit 1	ON	OFF	-
02	Bit 2	ON	OFF	-

© Siemens AG 2012 All Rights Reserved

03	Bit 3	ON	OFF	-
04	Bit 4	ON	OFF	-
05	Bit 5	ON	OFF	-
06	Bit 6	ON	OFF	-
07	Bit 7	ON	OFF	-
08	Bit 8	ON	OFF	-
09	Bit 9	ON	OFF	-
10	Bit 10	ON	OFF	-
11	Bit 11	ON	OFF	-
12	Bit 12	ON	OFF	-
13	Bit 13	ON	OFF	-
14	Bit 14	ON	OFF	-
15	Bit 15	ON	OFF	-

Dependency: Refer to: p2051, p2080, p2081, p2082, p2083

Note: r2089 together with p2080 to p2084 forms five binector-connector converters.

r2090.0...15 BO: IF1 PROFIBUS PZD1 receive bit-serial / IF1 PZD1 recv bitw

B_INF, CU_G130_DP, CU_G130_PN, CU_G150_DP, CU_G150_PN, ENC, TB30, TM150, TM31, VECTOR_G

Can be changed: - **Calculated:** - **Access level:** 3
Data type: Unsigned16 **Dynamic index:** - **Func. diagram:** 2468
P-Group: Communications **Units group:** - **Unit selection:** -
Not for motor type: - **Scaling:** - **Expert list:** 1

Min	Max	Factory setting
-	-	-

Description: Binector output for bit-serial interconnection of PZD1 (normally control word 1) received from the PROFIdrive controller.

Bit field:

Bit	Signal name	1 signal	0 signal	FP
00	Bit 0	ON	OFF	-
01	Bit 1	ON	OFF	-
02	Bit 2	ON	OFF	-
03	Bit 3	ON	OFF	-
04	Bit 4	ON	OFF	-
05	Bit 5	ON	OFF	-
06	Bit 6	ON	OFF	-
07	Bit 7	ON	OFF	-
08	Bit 8	ON	OFF	-
09	Bit 9	ON	OFF	-
10	Bit 10	ON	OFF	-
11	Bit 11	ON	OFF	-
12	Bit 12	ON	OFF	-
13	Bit 13	ON	OFF	-
14	Bit 14	ON	OFF	-
15	Bit 15	ON	OFF	-

Note: IF1: Interface 1

r2091.0...15 BO: IF1 PROFIdrive PZD2 receive bit-serial / IF1 PZD2 recv bitw

B_INF, CU_G130_DP, CU_G130_PN, CU_G150_DP, CU_G150_PN, ENC, TB30, TM150, TM31, VECTOR_G

Can be changed: - **Calculated:** - **Access level:** 3
Data type: Unsigned16 **Dynamic index:** - **Func. diagram:** 2468
P-Group: Communications **Units group:** - **Unit selection:** -
Not for motor type: - **Scaling:** - **Expert list:** 1

Min	Max	Factory setting
-	-	-

Description: Binector output for bit-serial interconnection of PZD2 received from the PROFIdrive controller.

© Siemens AG 2012 All Rights Reserved

Bit field:	Bit	Signal name	1 signal	0 signal	FP
	00	Bit 0	ON	OFF	-
	01	Bit 1	ON	OFF	-
	02	Bit 2	ON	OFF	-
	03	Bit 3	ON	OFF	-
	04	Bit 4	ON	OFF	-
	05	Bit 5	ON	OFF	-
	06	Bit 6	ON	OFF	-
	07	Bit 7	ON	OFF	-
	08	Bit 8	ON	OFF	-
	09	Bit 9	ON	OFF	-
	10	Bit 10	ON	OFF	-
	11	Bit 11	ON	OFF	-
	12	Bit 12	ON	OFF	-
	13	Bit 13	ON	OFF	-
	14	Bit 14	ON	OFF	-
	15	Bit 15	ON	OFF	-

Note: IF1: Interface 1

r2092.0...15 BO: IF1 PROFIdrive PZD3 receive bit-serial / IF1 PZD3 recv bitw

CU_G130_DP, CU_G130_PN, CU_G150_DP, CU_G150_PN, ENC, VECTOR_G	**Can be changed:** -	**Calculated:** -	**Access level:** 3
	Data type: Unsigned16	**Dynamic index:** -	**Func. diagram:** 2468
	P-Group: Communications	**Units group:** -	**Unit selection:** -
	Not for motor type: -	**Scaling:** -	**Expert list:** 1
	Min	**Max**	**Factory setting**
	-	-	-

Description: Binector output for bit-serial interconnection of PZD3 received from the PROFIdrive controller.

Bit field:	Bit	Signal name	1 signal	0 signal	FP
	00	Bit 0	ON	OFF	-
	01	Bit 1	ON	OFF	-
	02	Bit 2	ON	OFF	-
	03	Bit 3	ON	OFF	-
	04	Bit 4	ON	OFF	-
	05	Bit 5	ON	OFF	-
	06	Bit 6	ON	OFF	-
	07	Bit 7	ON	OFF	-
	08	Bit 8	ON	OFF	-
	09	Bit 9	ON	OFF	-
	10	Bit 10	ON	OFF	-
	11	Bit 11	ON	OFF	-
	12	Bit 12	ON	OFF	-
	13	Bit 13	ON	OFF	-
	14	Bit 14	ON	OFF	-
	15	Bit 15	ON	OFF	-

Note: IF1: Interface 1

r2093.0...15 BO: IF1 PROFIdrive PZD4 receive bit-serial / IF1 PZD4 recv bitw

CU_G130_DP, CU_G130_PN, CU_G150_DP, CU_G150_PN, ENC, VECTOR_G	**Can be changed:** -	**Calculated:** -	**Access level:** 3
	Data type: Unsigned16	**Dynamic index:** -	**Func. diagram:** 2468
	P-Group: Communications	**Units group:** -	**Unit selection:** -
	Not for motor type: -	**Scaling:** -	**Expert list:** 1
	Min	**Max**	**Factory setting**
	-	-	-

Description: Binector output for bit-serial interconnection of PZD4 (normally control word 2) received from the PROFIdrive controller.

Bit field:	Bit	Signal name	1 signal	0 signal	FP
	00	Bit 0	ON	OFF	-
	01	Bit 1	ON	OFF	-

© Siemens AG 2012 All Rights Reserved

02	Bit 2	ON	OFF	-
03	Bit 3	ON	OFF	-
04	Bit 4	ON	OFF	-
05	Bit 5	ON	OFF	-
06	Bit 6	ON	OFF	-
07	Bit 7	ON	OFF	-
08	Bit 8	ON	OFF	-
09	Bit 9	ON	OFF	-
10	Bit 10	ON	OFF	-
11	Bit 11	ON	OFF	-
12	Bit 12	ON	OFF	-
13	Bit 13	ON	OFF	-
14	Bit 14	ON	OFF	-
15	Bit 15	ON	OFF	-

Note: IF1: Interface 1

r2094.0...15 BO: Connector-binector converter binector output / Con/bin outp

B_INF, CU_G130_DP, CU_G130_PN, CU_G150_DP, CU_G150_PN, ENC, TB30, TM150, TM31, VECTOR_G

Can be changed: - **Calculated:** - **Access level:** 3
Data type: Unsigned16 **Dynamic index:** - **Func. diagram:** 2468
P-Group: Communications **Units group:** - **Unit selection:** -
Not for motor type: - **Scaling:** - **Expert list:** 1

Min	Max	Factory setting
-	-	-

Description: Binector output for bit-serial onward interconnection of a PZD word received from the PROFIdrive controller.
The PZD is selected via p2099[0].

Bit field:

Bit	Signal name	1 signal	0 signal	FP
00	Bit 0	ON	OFF	-
01	Bit 1	ON	OFF	-
02	Bit 2	ON	OFF	-
03	Bit 3	ON	OFF	-
04	Bit 4	ON	OFF	-
05	Bit 5	ON	OFF	-
06	Bit 6	ON	OFF	-
07	Bit 7	ON	OFF	-
08	Bit 8	ON	OFF	-
09	Bit 9	ON	OFF	-
10	Bit 10	ON	OFF	-
11	Bit 11	ON	OFF	-
12	Bit 12	ON	OFF	-
13	Bit 13	ON	OFF	-
14	Bit 14	ON	OFF	-
15	Bit 15	ON	OFF	-

Dependency: Refer to: p2099

r2095.0...15 BO: Connector-binector converter binector output / Con/bin outp

B_INF, CU_G130_DP, CU_G130_PN, CU_G150_DP, CU_G150_PN, ENC, TB30, TM150, TM31, VECTOR_G

Can be changed: - **Calculated:** - **Access level:** 3
Data type: Unsigned16 **Dynamic index:** - **Func. diagram:** 2468
P-Group: Communications **Units group:** - **Unit selection:** -
Not for motor type: - **Scaling:** - **Expert list:** 1

Min	Max	Factory setting
-	-	-

Description: Binector output for bit-serial interconnection of a PZD word received from the PROFIdrive controller.
The PZD is selected via p2099[1].

© Siemens AG 2012 All Rights Reserved

Bit field:	Bit	Signal name	1 signal	0 signal	FP
	00	Bit 0	ON	OFF	-
	01	Bit 1	ON	OFF	-
	02	Bit 2	ON	OFF	-
	03	Bit 3	ON	OFF	-
	04	Bit 4	ON	OFF	-
	05	Bit 5	ON	OFF	-
	06	Bit 6	ON	OFF	-
	07	Bit 7	ON	OFF	-
	08	Bit 8	ON	OFF	-
	09	Bit 9	ON	OFF	-
	10	Bit 10	ON	OFF	-
	11	Bit 11	ON	OFF	-
	12	Bit 12	ON	OFF	-
	13	Bit 13	ON	OFF	-
	14	Bit 14	ON	OFF	-
	15	Bit 15	ON	OFF	-

Dependency: Refer to: p2099

p2098[0...1] Inverter connector-binector converter binector output / Con/bin outp inv

B_INF, CU_G130_DP, CU_G130_PN, CU_G150_DP, CU_G150_PN, ENC, TB30, TM150, TM31, VECTOR_G

Can be changed: U, T | **Calculated:** - | **Access level:** 3
Data type: Unsigned16 | **Dynamic index:** - | **Func. diagram:** 2468
P-Group: Communications | **Units group:** - | **Unit selection:** -
Not for motor type: - | **Scaling:** - | **Expert list:** 1

Min	Max	Factory setting
-	-	0000 0000 0000 0000 bin

Description: Setting to invert the individual binector outputs of the connector-binector converter.
Using p2098[0], the signals of CI: p2099[0] are influenced.
Using p2098[1], the signals of CI: p2099[1] are influenced.

Bit field:	Bit	Signal name	1 signal	0 signal	FP
	00	Bit 0	Inverted	Not inverted	-
	01	Bit 1	Inverted	Not inverted	-
	02	Bit 2	Inverted	Not inverted	-
	03	Bit 3	Inverted	Not inverted	-
	04	Bit 4	Inverted	Not inverted	-
	05	Bit 5	Inverted	Not inverted	-
	06	Bit 6	Inverted	Not inverted	-
	07	Bit 7	Inverted	Not inverted	-
	08	Bit 8	Inverted	Not inverted	-
	09	Bit 9	Inverted	Not inverted	-
	10	Bit 10	Inverted	Not inverted	-
	11	Bit 11	Inverted	Not inverted	-
	12	Bit 12	Inverted	Not inverted	-
	13	Bit 13	Inverted	Not inverted	-
	14	Bit 14	Inverted	Not inverted	-
	15	Bit 15	Inverted	Not inverted	-

Dependency: Refer to: r2094, r2095, p2099

© Siemens AG 2012 All Rights Reserved

p2099[0...1] CI: Connector-binector converter signal source / Con/bin S_src

B_INF, CU_G130_DP, CU_G130_PN, CU_G150_DP, CU_G150_PN, ENC, TB30, TM150, TM31, VECTOR_G	**Can be changed:** U, T	**Calculated:** -	**Access level:** 3
	Data type: Unsigned32 / Integer16	**Dynamic index:** -	**Func. diagram:** 2468
	P-Group: Communications	**Units group:** -	**Unit selection:** -
	Not for motor type: -	**Scaling:** -	**Expert list:** 1
	Min	**Max**	**Factory setting**
	-	-	0

Description: Sets the signal source for the connector-binector converter.

A PZD receive word can be selected as signal source. The signals are available to be serially passed-on (interconnection).

Dependency: Refer to: r2094, r2095

Note: From the signal source set via the connector input, the corresponding lower 16 bits are converted.

p2099[0...1] together with r2094.0...15 and r2095.0...15 forms two connector-binector converters:

Connector input p2099[0] to binector output in r2094.0...15

Connector input p2099[1] to binector output in r2095.0...15

p2100[0...19] Setting the fault number for fault response / F_no F response

All objects	**Can be changed:** U, T	**Calculated:** -	**Access level:** 3
	Data type: Unsigned16	**Dynamic index:** -	**Func. diagram:** 1750, 8075
	P-Group: Messages	**Units group:** -	**Unit selection:** -
	Not for motor type: -	**Scaling:** -	**Expert list:** 1
	Min	**Max**	**Factory setting**
	0	65535	0

Description: Selects the faults for which the fault response should be changed

Dependency: The fault is selected and the required response is set under the same index.

Refer to: p2101

Notice: For the following cases, it is not possible to re-parameterize the fault response to a fault:

- if there is no existing fault number.
- the message type is not "fault" (F).

Note: Re-parameterization is also possible if a fault is present. The change only becomes effective after the fault has been resolved.

p2101[0...19] Setting the fault response / Fault response

B_INF	**Can be changed:** U, T	**Calculated:** -	**Access level:** 3
	Data type: Integer16	**Dynamic index:** -	**Func. diagram:** 1750, 8075
	P-Group: Messages	**Units group:** -	**Unit selection:** -
	Not for motor type: -	**Scaling:** -	**Expert list:** 1
	Min	**Max**	**Factory setting**
	0	2	0

Description: Sets the fault response for the selected fault.

Value:
0: NONE
1: OFF1
2: OFF2

Dependency: The fault is selected and the required response is set under the same index.

Note: Re-parameterization is also possible if a fault is present. The change only becomes effective after the fault has been resolved.

© Siemens AG 2012 All Rights Reserved

p2101[0...19] Setting the fault response / Fault response

CU_G130_DP, CU_G130_PN, CU_G150_DP, CU_G150_PN, ENC, HUB, TB30, TM150, TM31, TM54F_MA, TM54F_SL	**Can be changed:** U, T	**Calculated:** -	**Access level:** 3
	Data type: Integer16	**Dynamic index:** -	**Func. diagram:** 1750, 8075
	P-Group: Messages	**Units group:** -	**Unit selection:** -
	Not for motor type: -	**Scaling:** -	**Expert list:** 1
	Min	**Max**	**Factory setting**
	0	0	0

Description: Sets the fault response for the selected fault.

Value:
0: NONE

Dependency: The fault is selected and the required response is set under the same index.

Note: Re-parameterization is also possible if a fault is present. The change only becomes effective after the fault has been resolved.

p2101[0...19] Setting the fault response / Fault response

VECTOR_G	**Can be changed:** U, T	**Calculated:** -	**Access level:** 3
	Data type: Integer16	**Dynamic index:** -	**Func. diagram:** 1750, 8075
	P-Group: Messages	**Units group:** -	**Unit selection:** -
	Not for motor type: -	**Scaling:** -	**Expert list:** 1
	Min	**Max**	**Factory setting**
	0	7	0

Description: Sets the fault response for the selected fault.

Value:
0: NONE
1: OFF1
2: OFF2
3: OFF3
4: STOP1 (being developed)
5: STOP2
6: Internal armature short-circuit / DC braking
7: ENCODER (p0491)

Dependency: The fault is selected and the required response is set under the same index.

Refer to: p2100

Note: Re-parameterization is also possible if a fault is present. The change only becomes effective after the fault has been resolved.

The fault response can only be changed for faults with the appropriate identification (see the List Manual, chapter "Faults and alarms").

Example:

F12345 and fault response = OFF3 (OFF1, OFF2, NONE)

--> The default fault response OFF3 can be changed to OFF1, OFF2 or NONE.

Re value = 1 (OFF1):

Braking along the ramp-function generator down ramp followed by a pulse inhibit.

Re value = 2 (OFF2):

Internal/external pulse inhibit.

Re value = 3 (OFF3):

Braking along the OFF3 down ramp followed by a pulse inhibit.

Re value = 5 (STOP2):

n_set = 0

Re value = 6 (armature short-circuit, internal/DC braking):

The value can only be set for all motor data sets when p1231 = 3, 4.

a) For synchronous motors (p0300 = 2xx, 4xx), an internal armature short-circuit is executed.

b) For induction motors (p0300 = 1xx), a DC braking is initiated.

Re value = 7 (ENCODER (p0491)):

The fault response set in p0491 is executed if applicable.

© Siemens AG 2012 All Rights Reserved

Note:
IASC: Internal Armature Short Circuit
DCBRK: DC braking

p2102 BI: Acknowledge all faults / Ackn all faults

CU_G130_DP, CU_G130_PN, CU_G150_DP, CU_G150_PN

Can be changed: U, T	**Calculated:** -	**Access level:** 3
Data type: Unsigned32 / Binary	**Dynamic index:** -	**Func. diagram:** 2546, 8060
P-Group: Messages	**Units group:** -	**Unit selection:** -
Not for motor type: -	**Scaling:** -	**Expert list:** 1
Min	**Max**	**Factory setting**
-	-	0

Description: Sets the signal source to acknowledge all faults at all drive objects of the drive system.

Note: A fault acknowledgement is triggered with a 0/1 signal.

p2103[0...n] BI: 1. Acknowledge faults / 1. Acknowledge

B_INF, VECTOR_G

Can be changed: U, T	**Calculated:** -	**Access level:** 3
Data type: Unsigned32 / Binary	**Dynamic index:** CDS, p0170	**Func. diagram:** 2441, 2442, 2443, 2447, 2475, 2546, 9220, 9677, 9678
P-Group: Messages	**Units group:** -	**Unit selection:** -
Not for motor type: -	**Scaling:** -	**Expert list:** 1
Min	**Max**	**Factory setting**
-	-	0

Description: Sets the first signal source to acknowledge faults.

Notice: The parameter may be protected as a result of p0922 or p2079 and cannot be changed.

Note: A fault acknowledgement is triggered with a 0/1 signal.

p2103 BI: 1. Acknowledge faults / 1. Acknowledge

CU_G130_DP, CU_G130_PN, CU_G150_DP, CU_G150_PN, ENC, HUB, TB30, TM150, TM31, TM54F_MA, TM54F_SL

Can be changed: U, T	**Calculated:** -	**Access level:** 3
Data type: Unsigned32 / Binary	**Dynamic index:** -	**Func. diagram:** -
P-Group: Messages	**Units group:** -	**Unit selection:** -
Not for motor type: -	**Scaling:** -	**Expert list:** 1
Min	**Max**	**Factory setting**
-	-	0

Description: Sets the first signal source to acknowledge faults.

Notice: The parameter may be protected as a result of p0922 or p2079 and cannot be changed.

Note: A fault acknowledgement is triggered with a 0/1 signal.

p2104[0...n] BI: 2. Acknowledge faults / 2. Acknowledge

B_INF, VECTOR_G

Can be changed: U, T	**Calculated:** -	**Access level:** 3
Data type: Unsigned32 / Binary	**Dynamic index:** CDS, p0170	**Func. diagram:** 2546, 8060
P-Group: Messages	**Units group:** -	**Unit selection:** -
Not for motor type: -	**Scaling:** -	**Expert list:** 1
Min	**Max**	**Factory setting**
-	-	0

Description: Sets the second signal source to acknowledge faults.

Note: A fault acknowledgement is triggered with a 0/1 signal.

© Siemens AG 2012 All Rights Reserved

p2104 BI: 2. Acknowledge faults / 2. Acknowledge

CU_G130_DP, CU_G130_PN, CU_G150_DP, CU_G150_PN, ENC, HUB, TB30, TM150, TM31, TM54F_MA, TM54F_SL

Can be changed: U, T	**Calculated:** -	**Access level:** 3
Data type: Unsigned32 / Binary	**Dynamic index:** -	**Func. diagram:** -
P-Group: Messages	**Units group:** -	**Unit selection:** -
Not for motor type: -	**Scaling:** -	**Expert list:** 1
Min	**Max**	**Factory setting**
-	-	0

Description: Sets the second signal source to acknowledge faults.

Note: A fault acknowledgement is triggered with a 0/1 signal.

p2105[0...n] BI: 3. Acknowledge faults / 3. Acknowledge

B_INF, VECTOR_G

Can be changed: U, T	**Calculated:** -	**Access level:** 3
Data type: Unsigned32 / Binary	**Dynamic index:** CDS, p0170	**Func. diagram:** 2546, 8060
P-Group: Messages	**Units group:** -	**Unit selection:** -
Not for motor type: -	**Scaling:** -	**Expert list:** 1
Min	**Max**	**Factory setting**
-	-	0

Description: Sets the third signal source to acknowledge faults.

Note: A fault acknowledgement is triggered with a 0/1 signal.

p2105 BI: 3. Acknowledge faults / 3. Acknowledge

CU_G130_DP, CU_G130_PN, CU_G150_DP, CU_G150_PN, ENC, HUB, TB30, TM150, TM31, TM54F_MA, TM54F_SL

Can be changed: U, T	**Calculated:** -	**Access level:** 3
Data type: Unsigned32 / Binary	**Dynamic index:** -	**Func. diagram:** -
P-Group: Messages	**Units group:** -	**Unit selection:** -
Not for motor type: -	**Scaling:** -	**Expert list:** 1
Min	**Max**	**Factory setting**
-	-	0

Description: Sets the third signal source to acknowledge faults.

Note: A fault acknowledgement is triggered with a 0/1 signal.

p2106[0...n] BI: External fault 1 / External fault 1

B_INF, VECTOR_G

Can be changed: U, T	**Calculated:** -	**Access level:** 3
Data type: Unsigned32 / Binary	**Dynamic index:** CDS, p0170	**Func. diagram:** 2546
P-Group: Messages	**Units group:** -	**Unit selection:** -
Not for motor type: -	**Scaling:** -	**Expert list:** 1
Min	**Max**	**Factory setting**
-	-	1

Description: Sets the signal source for external fault 1.

Dependency: Refer to: F07860

Note: An external fault is triggered with a 1/0 signal.
If this fault is output at the Control Unit, then it is transferred to all existing drive objects.

© Siemens AG 2012 All Rights Reserved

p2106 BI: External fault 1 / External fault 1

CU_G130_DP, CU_G130_PN, CU_G150_DP, CU_G150_PN, ENC, HUB, TB30, TM150, TM31, TM54F_MA, TM54F_SL

Can be changed: U, T	**Calculated:** -	**Access level:** 3
Data type: Unsigned32 / Binary	**Dynamic index:** -	**Func. diagram:** -
P-Group: Messages	**Units group:** -	**Unit selection:** -
Not for motor type: -	**Scaling:** -	**Expert list:** 1

Min	Max	Factory setting
-	-	1

Description: Sets the signal source for external fault 1.

Dependency: Refer to: F07860

Note: An external fault is triggered with a 1/0 signal.
If this fault is output at the Control Unit, then it is transferred to all existing drive objects.

p2107[0...n] BI: External fault 2 / External fault 2

B_INF, VECTOR_G

Can be changed: U, T	**Calculated:** -	**Access level:** 3
Data type: Unsigned32 / Binary	**Dynamic index:** CDS, p0170	**Func. diagram:** 2546
P-Group: Messages	**Units group:** -	**Unit selection:** -
Not for motor type: -	**Scaling:** -	**Expert list:** 1

Min	Max	Factory setting
-	-	1

Description: Sets the signal source for external fault 2.

Dependency: Refer to: F07861

Note: An external fault is triggered with a 1/0 signal.
If this fault is output at the Control Unit, then it is transferred to all existing drive objects.

p2107 BI: External fault 2 / External fault 2

CU_G130_DP, CU_G130_PN, CU_G150_DP, CU_G150_PN, ENC, HUB, TB30, TM150, TM31, TM54F_MA, TM54F_SL

Can be changed: U, T	**Calculated:** -	**Access level:** 3
Data type: Unsigned32 / Binary	**Dynamic index:** -	**Func. diagram:** -
P-Group: Messages	**Units group:** -	**Unit selection:** -
Not for motor type: -	**Scaling:** -	**Expert list:** 1

Min	Max	Factory setting
-	-	1

Description: Sets the signal source for external fault 2.

Dependency: Refer to: F07861

Note: An external fault is triggered with a 1/0 signal.
If this fault is output at the Control Unit, then it is transferred to all existing drive objects.

p2108[0...n] BI: External fault 3 / External fault 3

B_INF, VECTOR_G

Can be changed: U, T	**Calculated:** -	**Access level:** 3
Data type: Unsigned32 / Binary	**Dynamic index:** CDS, p0170	**Func. diagram:** 2546
P-Group: Messages	**Units group:** -	**Unit selection:** -
Not for motor type: -	**Scaling:** -	**Expert list:** 1

Min	Max	Factory setting
-	-	1

Description: Sets the signal source for external fault 3.
External fault 3 is initiated by the following AND logic operation:
- BI: p2108 negated
- BI: p3111
- BI: p3112 negated

© Siemens AG 2012 All Rights Reserved

Dependency: Refer to: p3110, p3111, p3112
Refer to: F07862

Note: An external fault is triggered with a 1/0 signal.
If this fault is output at the Control Unit, then it is transferred to all existing drive objects.

p2108 BI: External fault 3 / External fault 3

CU_G130_DP, CU_G130_PN, CU_G150_DP, CU_G150_PN, ENC, HUB, TB30, TM150, TM31, TM54F_MA, TM54F_SL

Can be changed: U, T	**Calculated:** -	**Access level:** 3
Data type: Unsigned32 / Binary	**Dynamic index:** -	**Func. diagram:** -
P-Group: Messages	**Units group:** -	**Unit selection:** -
Not for motor type: -	**Scaling:** -	**Expert list:** 1

Min	Max	Factory setting
-	-	1

Description: Sets the signal source for external fault 3.
External fault 3 is initiated by the following AND logic operation:
- BI: p2108 negated
- BI: p3111
- BI: p3112 negated

Dependency: Refer to: p3110, p3111, p3112
Refer to: F07862

Note: An external fault is triggered with a 1/0 signal.
If this fault is output at the Control Unit, then it is transferred to all existing drive objects.

r2109[0...63] Fault time removed in milliseconds / t_flt resolved ms

All objects

Can be changed: -	**Calculated:** -	**Access level:** 3
Data type: Unsigned32	**Dynamic index:** -	**Func. diagram:** 1750, 8060
P-Group: Messages	**Units group:** -	**Unit selection:** -
Not for motor type: -	**Scaling:** -	**Expert list:** 1

Min	Max	Factory setting
- [ms]	- [ms]	- [ms]

Description: Displays the system runtime in milliseconds when the fault was removed.

Dependency: Refer to: r0945, r0947, r0948, r0949, r2114, r2130, r2133, r2136, r3115, r3120, r3122

Notice: The time comprises r2136 (days) and r2109 (milliseconds).

Note: The buffer parameters are cyclically updated in the background (refer to status signal in r2139).
The structure of the fault buffer and the assignment of the indices is shown in r0945.

r2110[0...63] Alarm number / Alarm number

All objects

Can be changed: -	**Calculated:** -	**Access level:** 2
Data type: Unsigned16	**Dynamic index:** -	**Func. diagram:** 8065
P-Group: Messages	**Units group:** -	**Unit selection:** -
Not for motor type: -	**Scaling:** -	**Expert list:** 1

Min	Max	Factory setting
-	-	-

Description: This parameter is identical to r2122.

© Siemens AG 2012 All Rights Reserved

p2111 Alarm counter / Alarm counter

All objects	**Can be changed:** U, T	**Calculated:** -	**Access level:** 3
	Data type: Unsigned16	**Dynamic index:** -	**Func. diagram:** 1750, 8065
	P-Group: Messages	**Units group:** -	**Unit selection:** -
	Not for motor type: -	**Scaling:** -	**Expert list:** 1
	Min	**Max**	**Factory setting**
	0	65535	0

Description: Number of alarms that have occurred after the last reset.

Dependency: When p2111 is set to 0, the following is initiated:
- all of the alarms of the alarm buffer that have gone [0...7] are transferred into the alarm history [8...63].
- the alarm buffer [0...7] is deleted.

Refer to: r2110, r2122, r2123, r2124, r2125

Note: The parameter is reset to 0 at POWER ON.

p2112[0...n] BI: External alarm 1 / External alarm 1

B_INF, VECTOR_G	**Can be changed:** U, T	**Calculated:** -	**Access level:** 3
	Data type: Unsigned32 / Binary	**Dynamic index:** CDS, p0170	**Func. diagram:** 2546
	P-Group: Messages	**Units group:** -	**Unit selection:** -
	Not for motor type: -	**Scaling:** -	**Expert list:** 1
	Min	**Max**	**Factory setting**
	-	-	1

Description: Sets the signal source for external alarm 1.

Dependency: Refer to: A07850

Note: An external alarm is triggered with a 1/0 signal.

p2112 BI: External alarm 1 / External alarm 1

CU_G130_DP, CU_G130_PN, CU_G150_DP, CU_G150_PN, ENC, HUB, TB30, TM150, TM31, TM54F_MA, TM54F_SL	**Can be changed:** U, T	**Calculated:** -	**Access level:** 3
	Data type: Unsigned32 / Binary	**Dynamic index:** -	**Func. diagram:** -
	P-Group: Messages	**Units group:** -	**Unit selection:** -
	Not for motor type: -	**Scaling:** -	**Expert list:** 1
	Min	**Max**	**Factory setting**
	-	-	1

Description: Sets the signal source for external alarm 1.

Dependency: Refer to: A07850

Note: An external alarm is triggered with a 1/0 signal.

r2114[0...1] System runtime total / Sys runtime tot

CU_G130_DP, CU_G130_PN, CU_G150_DP, CU_G150_PN	**Can be changed:** -	**Calculated:** -	**Access level:** 3
	Data type: Unsigned32	**Dynamic index:** -	**Func. diagram:** -
	P-Group: Messages	**Units group:** -	**Unit selection:** -
	Not for motor type: -	**Scaling:** -	**Expert list:** 1
	Min	**Max**	**Factory setting**
	-	-	-

Description: Displays the total system runtime for the drive unit.
The time comprises r2114[0] (milliseconds) and r2114[1] (days).
After r2114[0] has reached a value of 86.400.000 ms (24 hours) this value is reset and r2114[1] is incremented.

Index: [0] = Milliseconds
[1] = Days

Dependency: Refer to: r0948, r2109, r2123, r2125, r2130, r2136, r2145, r2146

© Siemens AG 2012 All Rights Reserved

Note: The time in r2114 is used to display the times for faults and alarms.
When the electronic power supply is switched out, the counter values are saved.
After the drive unit is powered up, the counter continues to run with the last value that was saved.

p2116[0...n] BI: External alarm 2 / External alarm 2

B_INF, VECTOR_G	**Can be changed:** U, T	**Calculated:** -	**Access level:** 3
	Data type: Unsigned32 / Binary	**Dynamic index:** CDS, p0170	**Func. diagram:** 2546
	P-Group: Messages	**Units group:** -	**Unit selection:** -
	Not for motor type: -	**Scaling:** -	**Expert list:** 1
	Min	**Max**	**Factory setting**
	-	-	1

Description: Sets the signal source for external alarm 2.
Dependency: Refer to: A07851
Note: An external alarm is triggered with a 1/0 signal.

p2116 BI: External alarm 2 / External alarm 2

CU_G130_DP, CU_G130_PN, CU_G150_DP, CU_G150_PN, ENC, HUB, TB30, TM150, TM31, TM54F_MA, TM54F_SL	**Can be changed:** U, T	**Calculated:** -	**Access level:** 3
	Data type: Unsigned32 / Binary	**Dynamic index:** -	**Func. diagram:** -
	P-Group: Messages	**Units group:** -	**Unit selection:** -
	Not for motor type: -	**Scaling:** -	**Expert list:** 1
	Min	**Max**	**Factory setting**
	-	-	1

Description: Sets the signal source for external alarm 2.
Dependency: Refer to: A07851
Note: An external alarm is triggered with a 1/0 signal.

p2117[0...n] BI: External alarm 3 / External alarm 3

B_INF, VECTOR_G	**Can be changed:** U, T	**Calculated:** -	**Access level:** 3
	Data type: Unsigned32 / Binary	**Dynamic index:** CDS, p0170	**Func. diagram:** 2546
	P-Group: Messages	**Units group:** -	**Unit selection:** -
	Not for motor type: -	**Scaling:** -	**Expert list:** 1
	Min	**Max**	**Factory setting**
	-	-	1

Description: Sets the signal source for external alarm 3.
Dependency: Refer to: A07852
Note: An external alarm is triggered with a 1/0 signal.

p2117 BI: External alarm 3 / External alarm 3

CU_G130_DP, CU_G130_PN, CU_G150_DP, CU_G150_PN, ENC, HUB, TB30, TM150, TM31, TM54F_MA, TM54F_SL	**Can be changed:** U, T	**Calculated:** -	**Access level:** 3
	Data type: Unsigned32 / Binary	**Dynamic index:** -	**Func. diagram:** -
	P-Group: Messages	**Units group:** -	**Unit selection:** -
	Not for motor type: -	**Scaling:** -	**Expert list:** 1
	Min	**Max**	**Factory setting**
	-	-	1

Description: Sets the signal source for external alarm 3.
Dependency: Refer to: A07852
Note: An external alarm is triggered with a 1/0 signal.

© Siemens AG 2012 All Rights Reserved

p2118[0...19] Sets the message number for message type. / Msg_no Msg_type

All objects	**Can be changed:** U, T	**Calculated:** -	**Access level:** 3
	Data type: Unsigned16	**Dynamic index:** -	**Func. diagram:** 1750, 8075
	P-Group: Messages	**Units group:** -	**Unit selection:** -
	Not for motor type: -	**Scaling:** -	**Expert list:** 1
	Min	**Max**	**Factory setting**
	0	65535	0

Description: Selects faults or alarms for which the message type should be changed.

Dependency: Selects the fault or alarm selection and sets the required type of message realized under the same index.
Refer to: p2119

Notice: It is not possible to re-parameterize the message type in the following cases:
- if there is no existing message number.

Note: Re-parameterization is also possible if a message is present. The change only becomes effective after the message has gone.

p2119[0...19] Setting the message type / Message type

All objects	**Can be changed:** U, T	**Calculated:** -	**Access level:** 3
	Data type: Integer16	**Dynamic index:** -	**Func. diagram:** 1750, 8075
	P-Group: Messages	**Units group:** -	**Unit selection:** -
	Not for motor type: -	**Scaling:** -	**Expert list:** 1
	Min	**Max**	**Factory setting**
	1	3	1

Description: Sets the message type for the selected fault or alarm.

Value:
1: Fault (F)
2: Alarm (A)
3: No message (N)

Dependency: Selects the fault or alarm selection and sets the required type of message realized under the same index.
Refer to: p2118

Note: Re-parameterization is also possible if a message is present. The change only becomes effective after the message has gone.
The message type can only be changed for messages with the appropriate identification.
Example:
F12345(A) --> Fault F12345 can be changed to alarm A12345.
In this case, the message number that may be possibly entered in p2100[0...19] and p2126[0...19] is automatically removed.

r2120 CO: Sum of fault and alarm buffer changes / Sum buffer changed

All objects	**Can be changed:** -	**Calculated:** -	**Access level:** 4
	Data type: Unsigned16	**Dynamic index:** -	**Func. diagram:** 8065
	P-Group: Messages	**Units group:** -	**Unit selection:** -
	Not for motor type: -	**Scaling:** -	**Expert list:** 1
	Min	**Max**	**Factory setting**
	-	-	-

Description: Displays the sum of all of the fault and alarm buffer changes in the drive unit.

Dependency: Refer to: r0944, r2121

© Siemens AG 2012 All Rights Reserved

r2121 CO: Counter, alarm buffer changes / Alrm buff changed

All objects	**Can be changed:** -	**Calculated:** -	**Access level:** 3
	Data type: Unsigned16	**Dynamic index:** -	**Func. diagram:** 8065
	P-Group: Messages	**Units group:** -	**Unit selection:** -
	Not for motor type: -	**Scaling:** -	**Expert list:** 1
	Min	**Max**	**Factory setting**
	-	-	-

Description: This counter is incremented every time the alarm buffer changes.

Dependency: Refer to: r2110, r2122, r2123, r2124, r2125

r2122[0...63] Alarm code / Alarm code

All objects	**Can be changed:** -	**Calculated:** -	**Access level:** 2
	Data type: Unsigned16	**Dynamic index:** -	**Func. diagram:** 1750, 8065
	P-Group: Messages	**Units group:** -	**Unit selection:** -
	Not for motor type: -	**Scaling:** -	**Expert list:** 1
	Min	**Max**	**Factory setting**
	-	-	-

Description: Displays the number of alarms that have occurred.

Dependency: Refer to: r2110, r2123, r2124, r2125, r2134, r2145, r2146, r3121, r3123

Notice: The properties of the alarm buffer should be taken from the corresponding product documentation.

Note: The buffer parameters are cyclically updated in the background (refer to status signal in r2139).
Alarm buffer structure (general principle):
r2122[0], r2124[0], r2123[0], r2125[0] --> alarm 1 (the oldest)
. . .
r2122[7], r2124[7], r2123[7], r2125[7] --> Alarm 8 (the latest)
When the alarm buffer is full, the alarms that have gone are entered into the alarm history:
r2122[8], r2124[8], r2123[8], r2125[8] --> Alarm 1 (the latest)
. . .
r2122[63], r2124[63], r2123[63], r2125[63] --> alarm 56 (the oldest)

r2123[0...63] Alarm time received in milliseconds / t_alarm recv ms

All objects	**Can be changed:** -	**Calculated:** -	**Access level:** 3
	Data type: Unsigned32	**Dynamic index:** -	**Func. diagram:** 1750, 8065
	P-Group: Messages	**Units group:** -	**Unit selection:** -
	Not for motor type: -	**Scaling:** -	**Expert list:** 1
	Min	**Max**	**Factory setting**
	- [ms]	- [ms]	- [ms]

Description: Displays the system runtime in milliseconds when the alarm occurred.

Dependency: Refer to: r2110, r2114, r2122, r2124, r2125, r2134, r2145, r2146, r3121, r3123

Notice: The time comprises r2145 (days) and r2123 (milliseconds).

Note: The buffer parameters are cyclically updated in the background (refer to status signal in r2139).
The structure of the alarm buffer and the assignment of the indices is shown in r2122.

r2124[0...63] Alarm value / Alarm value

All objects	**Can be changed:** -	**Calculated:** -	**Access level:** 3
	Data type: Integer32	**Dynamic index:** -	**Func. diagram:** 1750, 8065
	P-Group: Messages	**Units group:** -	**Unit selection:** -
	Not for motor type: -	**Scaling:** -	**Expert list:** 1
	Min	**Max**	**Factory setting**
	-	-	-

Description: Displays additional information about the active alarm (as integer number).

© Siemens AG 2012 All Rights Reserved

Dependency: Refer to: r2110, r2122, r2123, r2125, r2134, r2145, r2146, r3121, r3123
Note: The buffer parameters are cyclically updated in the background (refer to status signal in r2139).
The structure of the alarm buffer and the assignment of the indices is shown in r2122.

r2125[0...63] Alarm time removed in milliseconds / t_alarm res ms

All objects

Can be changed: -	**Calculated:** -	**Access level:** 3
Data type: Unsigned32	**Dynamic index:** -	**Func. diagram:** 1750, 8065
P-Group: Messages	**Units group:** -	**Unit selection:** -
Not for motor type: -	**Scaling:** -	**Expert list:** 1
Min	**Max**	**Factory setting**
- [ms]	- [ms]	- [ms]

Description: Displays the system runtime in milliseconds when the alarm was cleared.
Dependency: Refer to: r2110, r2114, r2122, r2123, r2124, r2134, r2145, r2146, r3121, r3123
Notice: The time comprises r2146 (days) and r2125 (milliseconds).
Note: The buffer parameters are cyclically updated in the background (refer to status signal in r2139).
The structure of the alarm buffer and the assignment of the indices is shown in r2122.

p2126[0...19] Setting fault number for acknowledge mode / Fault_no ackn_mode

All objects

Can be changed: U, T	**Calculated:** -	**Access level:** 3
Data type: Unsigned16	**Dynamic index:** -	**Func. diagram:** 1750, 8075
P-Group: Messages	**Units group:** -	**Unit selection:** -
Not for motor type: -	**Scaling:** -	**Expert list:** 1
Min	**Max**	**Factory setting**
0	65535	0

Description: Selects the faults for which the acknowledge mode is to be changed
Dependency: Selects the faults and sets the required acknowledge mode realized under the same index
Refer to: p2127
Notice: It is not possible to re-parameterize the acknowledge mode of a fault in the following cases:
- Fault number does not exist.
- Message type is not "fault" (F).
Note: Re-parameterization is also possible if a fault is present. The change only becomes effective after the fault has been resolved.

p2127[0...19] Sets acknowledgement mode / Acknowledge mode

All objects

Can be changed: U, T	**Calculated:** -	**Access level:** 3
Data type: Integer16	**Dynamic index:** -	**Func. diagram:** 1750, 8075
P-Group: Messages	**Units group:** -	**Unit selection:** -
Not for motor type: -	**Scaling:** -	**Expert list:** 1
Min	**Max**	**Factory setting**
1	3	1

Description: Sets the acknowledge mode for selected fault.
Value:
1: Acknowledgment only using POWER ON
2: Ack IMMEDIATELY after the fault cause has been removed
3: Acknowledgement only for PULSE INHIBIT
Dependency: Selects the faults and sets the required acknowledge mode realized under the same index
Refer to: p2126
Notice: It is not possible to re-parameterize the acknowledge mode of a fault in the following cases:
- if there is no existing fault number.
- the message type is not "fault" (F).
Note: Re-parameterization is also possible if a fault is present. The change only becomes effective after the fault has been resolved.
The acknowledge mode can only be changed for faults with the appropriate identification.

© Siemens AG 2012 All Rights Reserved

Example:
F12345 and acknowledge mode = IMMEDIATELY (POWER ON)
--> The acknowledge mode can be changed from IMMEDIATELY to POWER ON.

p2128[0...15] Selecting fault/alarm code for trigger / Message trigger

All objects

Can be changed: U, T	**Calculated:** -	**Access level:** 3
Data type: Unsigned16	**Dynamic index:** -	**Func. diagram:** 1750, 8070
P-Group: Messages	**Units group:** -	**Unit selection:** -
Not for motor type: -	**Scaling:** -	**Expert list:** 1
Min	**Max**	**Factory setting**
0	65535	0

Description: Selects faults or alarms which can be used as trigger.

Dependency: Refer to: r2129

r2129.0...15 CO/BO: Trigger word for faults and alarms / Trigger word

All objects

Can be changed: -	**Calculated:** -	**Access level:** 3
Data type: Unsigned16	**Dynamic index:** -	**Func. diagram:** 1530, 8070
P-Group: Messages	**Units group:** -	**Unit selection:** -
Not for motor type: -	**Scaling:** -	**Expert list:** 1
Min	**Max**	**Factory setting**
-	-	-

Description: Trigger signal for the selected faults and alarms

Bit field:

Bit	Signal name	1 signal	0 signal	FP
00	Trigger signal p2128[0]	ON	OFF	-
01	Trigger signal p2128[1]	ON	OFF	-
02	Trigger signal p2128[2]	ON	OFF	-
03	Trigger signal p2128[3]	ON	OFF	-
04	Trigger signal p2128[4]	ON	OFF	-
05	Trigger signal p2128[5]	ON	OFF	-
06	Trigger signal p2128[6]	ON	OFF	-
07	Trigger signal p2128[7]	ON	OFF	-
08	Trigger signal p2128[8]	ON	OFF	-
09	Trigger signal p2128[9]	ON	OFF	-
10	Trigger signal p2128[10]	ON	OFF	-
11	Trigger signal p2128[11]	ON	OFF	-
12	Trigger signal p2128[12]	ON	OFF	-
13	Trigger signal p2128[13]	ON	OFF	-
14	Trigger signal p2128[14]	ON	OFF	-
15	Trigger signal p2128[15]	ON	OFF	-

Dependency: If one of the faults or alarms selected in p2128[n] occurs, then the particular bit of this binector output is set.
Refer to: p2128

Note: CO: r2129 = 0 --> None of the selected messages has occurred.
CO: r2129 > 0 --> At least one of the selected messages has occurred.

r2130[0...63] Fault time received in days / t_fault recv days

All objects

Can be changed: -	**Calculated:** -	**Access level:** 3
Data type: Unsigned16	**Dynamic index:** -	**Func. diagram:** 8060
P-Group: Messages	**Units group:** -	**Unit selection:** -
Not for motor type: -	**Scaling:** -	**Expert list:** 1
Min	**Max**	**Factory setting**
-	-	-

Description: Displays the system runtime in days when the fault occurred.

Dependency: Refer to: r0945, r0947, r0948, r0949, r2109, r2114, r2133, r2136, r3115, r3120, r3122

Notice: The time comprises r2130 (days) and r0948 (milliseconds).

Note: The buffer parameters are cyclically updated in the background (refer to status signal in r2139).

© Siemens AG 2012 All Rights Reserved

r2131 CO: Actual fault code / Actual fault code

All objects	**Can be changed:** -	**Calculated:** -	**Access level:** 3
	Data type: Unsigned16	**Dynamic index:** -	**Func. diagram:** 8060
	P-Group: Messages	**Units group:** -	**Unit selection:** -
	Not for motor type: -	**Scaling:** -	**Expert list:** 1
	Min	**Max**	**Factory setting**
	-	-	-

Description: Displays the code of the oldest active fault.
Dependency: Refer to: r3131, r3132
Note: 0: No fault present.

r2132 CO: Actual alarm code / Actual alarm code

All objects	**Can be changed:** -	**Calculated:** -	**Access level:** 3
	Data type: Unsigned16	**Dynamic index:** -	**Func. diagram:** 8065
	P-Group: Messages	**Units group:** -	**Unit selection:** -
	Not for motor type: -	**Scaling:** -	**Expert list:** 1
	Min	**Max**	**Factory setting**
	-	-	-

Description: Displays the code of the last alarm that occurred.
Note: 0: No alarm present.

r2133[0...63] Fault value for float values / Fault val float

All objects	**Can be changed:** -	**Calculated:** -	**Access level:** 3
	Data type: FloatingPoint32	**Dynamic index:** -	**Func. diagram:** 8060
	P-Group: Messages	**Units group:** -	**Unit selection:** -
	Not for motor type: -	**Scaling:** -	**Expert list:** 1
	Min	**Max**	**Factory setting**
	-	-	-

Description: Displays additional information about the fault that occurred for float values.
Dependency: Refer to: r0945, r0947, r0948, r0949, r2109, r2130, r2136, r3115
Note: The buffer parameters are cyclically updated in the background (refer to status signal in r2139).

r2134[0...63] Alarm value for float values / Alarm value float

All objects	**Can be changed:** -	**Calculated:** -	**Access level:** 3
	Data type: FloatingPoint32	**Dynamic index:** -	**Func. diagram:** 8065
	P-Group: Messages	**Units group:** -	**Unit selection:** -
	Not for motor type: -	**Scaling:** -	**Expert list:** 1
	Min	**Max**	**Factory setting**
	-	-	-

Description: Displays additional information about the active alarm for float values.
Dependency: Refer to: r2110, r2122, r2123, r2124, r2125, r2145, r2146, r3121, r3123
Note: The buffer parameters are cyclically updated in the background (refer to status signal in r2139).

r2135.0...15 CO/BO: Status word faults/alarms 2 / ZSW fault/alarm 2

All objects	**Can be changed:** -	**Calculated:** -	**Access level:** 2
	Data type: Unsigned16	**Dynamic index:** -	**Func. diagram:** 1530, 2548
	P-Group: Displays, signals	**Units group:** -	**Unit selection:** -
	Not for motor type: -	**Scaling:** -	**Expert list:** 1
	Min	**Max**	**Factory setting**
	-	-	-

Description: Displays the second status word of faults and alarms.

© Siemens AG 2012 All Rights Reserved

Bit field:	Bit	Signal name	1 signal	0 signal	FP
	00	Fault encoder 1	Yes	No	-
	01	Fault encoder 2	Yes	No	-
	02	Fault encoder 3	Yes	No	-
	12	Fault motor overtemperature	Yes	No	-
	13	Fault power unit thermal overload	Yes	No	-
	14	Alarm motor overtemperature	Yes	No	-
	15	Alarm power unit thermal overload	Yes	No	-

r2136[0...63] Fault time removed in days / t_flt resolv. days

All objects

Can be changed: - **Calculated:** - **Access level:** 3
Data type: Unsigned16 **Dynamic index:** - **Func. diagram:** 8060
P-Group: Messages **Units group:** - **Unit selection:** -
Not for motor type: - **Scaling:** - **Expert list:** 1

Min	Max	Factory setting
-	-	-

Description: Displays the system runtime in days when the fault was removed.
Dependency: Refer to: r0945, r0947, r0948, r0949, r2109, r2114, r2130, r2133, r3115, r3120, r3122
Notice: The time comprises r2136 (days) and r2109 (milliseconds).
Note: The buffer parameters are cyclically updated in the background (refer to status signal in r2139).

r2138.7...15 CO/BO: Control word faults/alarms / STW fault/alarm

All objects

Can be changed: - **Calculated:** - **Access level:** 2
Data type: Unsigned16 **Dynamic index:** - **Func. diagram:** 1530, 2546
P-Group: Displays, signals **Units group:** - **Unit selection:** -
Not for motor type: - **Scaling:** - **Expert list:** 1

Min	Max	Factory setting
-	-	-

Description: Displays the control word of the faults and alarms.

Bit field:	Bit	Signal name	1 signal	0 signal	FP
	07	Acknowledge fault	Yes	No	-
	10	External alarm 1 (A07850) effective	Yes	No	-
	11	External alarm 2 (A07851) effective	Yes	No	-
	12	External alarm 3 (A07852) effective	Yes	No	-
	13	External fault 1 (F07860) effective	Yes	No	-
	14	External fault 2 (F07861) effective	Yes	No	-
	15	External fault 3 (F07862) effective	Yes	No	-

Dependency: Refer to: p2103, p2104, p2105, p2106, p2107, p2108, p2112, p2116, p2117, p3110, p3111, p3112

r2139.0...12 CO/BO: Status word faults/alarms 1 / ZSW fault/alarm 1

All objects

Can be changed: - **Calculated:** - **Access level:** 2
Data type: Unsigned16 **Dynamic index:** - **Func. diagram:** 1530, 2548
P-Group: Displays, signals **Units group:** - **Unit selection:** -
Not for motor type: - **Scaling:** - **Expert list:** 1

Min	Max	Factory setting
-	-	-

Description: Displays the first status word of faults and alarms.

Bit field:	Bit	Signal name	1 signal	0 signal	FP
	00	Being acknowledged	Yes	No	-
	01	Acknowledgment required	Yes	No	-
	03	Fault present	Yes	No	-
	05	Safety message present	Yes	No	-
	06	Internal message 1 present	Yes	No	-
	07	Alarm present	Yes	No	-
	08	Internal message 2 present	Yes	No	-

© Siemens AG 2012 All Rights Reserved

11	Alarm class bit 0	High	Low	-
12	Alarm class bit 1	High	Low	-

Note: Re bit 03, 05, 07:

These bits are set if at least one fault/alarm occurs. Data is entered into the fault/alarm buffer with delay. This is the reason that the fault/alarm buffer should only be read if, after "fault present"/"alarm present" has occurred, a change in the buffer was also detected (r0944, r9744, r2121).

Re bit 06, 08:

These status bits are used for internal diagnostic purposes only.

Re bit 11, 12:

These status bits are used for the classification of internal alarm classes and are intended for diagnostic purposes only on certain automation systems with integrated SINAMICS functionality.

p2140[0...n] Hysteresis speed 2 / n_hysteresis 2

VECTOR_G

Can be changed: U, T	**Calculated:** CALC_MOD_LIM_REF	**Access level:** 3
Data type: FloatingPoint32	**Dynamic index:** DDS, p0180	**Func. diagram:** 8010
P-Group: Messages	**Units group:** 3_1	**Unit selection:** p0505
Not for motor type: -	**Scaling:** -	**Expert list:** 1
Min	**Max**	**Factory setting**
0.00 [rpm]	300.00 [rpm]	90.00 [rpm]

Description: Sets the hysteresis speed (bandwidth) for the following signals:

"|n_act| < = speed threshold value 2" (BO: r2197.1)

"|n_act| > speed threshold value 2" (BO: r2197.2)

Dependency: Refer to: p2155, r2197

p2141[0...n] Speed threshold 1 / n_thresh val 1

VECTOR_G

Can be changed: U, T	**Calculated:** CALC_MOD_LIM_REF	**Access level:** 3
Data type: FloatingPoint32	**Dynamic index:** DDS, p0180	**Func. diagram:** 8010
P-Group: Messages	**Units group:** 3_1	**Unit selection:** p0505
Not for motor type: -	**Scaling:** -	**Expert list:** 1
Min	**Max**	**Factory setting**
0.00 [rpm]	210000.00 [rpm]	5.00 [rpm]

Description: Sets the speed threshold value for the signal "f or n comparison value reached or exceeded" (BO: r2199.1).

Dependency: Refer to: p2142, r2199

p2142[0...n] Hysteresis speed 1 / n_hysteresis 1

VECTOR_G

Can be changed: U, T	**Calculated:** CALC_MOD_LIM_REF	**Access level:** 3
Data type: FloatingPoint32	**Dynamic index:** DDS, p0180	**Func. diagram:** 8010
P-Group: Messages	**Units group:** 3_1	**Unit selection:** p0505
Not for motor type: -	**Scaling:** -	**Expert list:** 1
Min	**Max**	**Factory setting**
0.00 [rpm]	300.00 [rpm]	2.00 [rpm]

Description: Sets the hysteresis speed (bandwidth) for the signal "f or n / v comparison value reached or exceeded" (BO: r2199.1).

Dependency: Refer to: p2141, r2199

© Siemens AG 2012 All Rights Reserved

p2144[0...n] BI: Motor stall monitoring enable (negated) / Mot stall enab neg

VECTOR_G	**Can be changed:** U, T	**Calculated:** -	**Access level:** 3
	Data type: Unsigned32 / Binary	**Dynamic index:** CDS, p0170	**Func. diagram:** 8012
	P-Group: -	**Units group:** -	**Unit selection:** -
	Not for motor type: -	**Scaling:** -	**Expert list:** 1
	Min	**Max**	**Factory setting**
	-	-	0

Description: Sets the signal source for the negated enable (0 = enable) of the motor stall monitoring.

Dependency: Refer to: p2163, p2164, p2166, r2197, r2198
Refer to: F07900

Note: When interconnecting the enable signal with r2197.7 then the stall signal is suppressed if there is no speed setpoint - actual value deviation.

r2145[0...63] Alarm time received in days / t_alarm recv days

All objects	**Can be changed:** -	**Calculated:** -	**Access level:** 3
	Data type: Unsigned16	**Dynamic index:** -	**Func. diagram:** 8065
	P-Group: Messages	**Units group:** -	**Unit selection:** -
	Not for motor type: -	**Scaling:** -	**Expert list:** 1
	Min	**Max**	**Factory setting**
	-	-	-

Description: Displays the system runtime in days when the alarm occurred.

Dependency: Refer to: r2110, r2114, r2122, r2123, r2124, r2125, r2134, r2146, r3121, r3123

Notice: The time comprises r2145 (days) and r2123 (milliseconds).

Note: The buffer parameters are cyclically updated in the background (refer to status signal in r2139).

r2146[0...63] Alarm time removed in days / t_alarm res days

All objects	**Can be changed:** -	**Calculated:** -	**Access level:** 3
	Data type: Unsigned16	**Dynamic index:** -	**Func. diagram:** 8065
	P-Group: Messages	**Units group:** -	**Unit selection:** -
	Not for motor type: -	**Scaling:** -	**Expert list:** 1
	Min	**Max**	**Factory setting**
	-	-	-

Description: Displays the system runtime in days when the alarm was cleared.

Dependency: Refer to: r2110, r2114, r2122, r2123, r2124, r2125, r2134, r2145, r3121, r3123

Notice: The time comprises r2146 (days) and r2125 (milliseconds).

Note: The buffer parameters are cyclically updated in the background (refer to status signal in r2139).

p2147 Delete fault buffer of all drive objects / Del fault buffer

CU_G130_DP, CU_G130_PN, CU_G150_DP, CU_G150_PN	**Can be changed:** U, T	**Calculated:** -	**Access level:** 4
	Data type: Integer16	**Dynamic index:** -	**Func. diagram:** 8060
	P-Group: Displays, signals	**Units group:** -	**Unit selection:** -
	Not for motor type: -	**Scaling:** -	**Expert list:** 1
	Min	**Max**	**Factory setting**
	0	1	0

Description: Setting to delete the fault buffer of all existing drive objects.

Value:
0: Inactive
1: Start to delete the fault buffer of all drive objects

Dependency: Refer to: r0945, r0947, r0948, r0949, r2109, r2130, r2133, r2136

Note: p2147 is automatically set to 0 after execution.

© Siemens AG 2012 All Rights Reserved

p2148[0...n] BI: RFG active / RFG active

VECTOR_G	**Can be changed:** U, T	**Calculated:** CALC_MOD_LIM_REF	**Access level:** 3
	Data type: Unsigned32 / Binary	**Dynamic index:** CDS, p0170	**Func. diagram:** 8011
	P-Group: Messages	**Units group:** -	**Unit selection:** -
	Not for motor type: -	**Scaling:** -	**Expert list:** 1
	Min	**Max**	**Factory setting**
	-	-	0

Description: Sets the signal source for the signal "ramp-function generator active" for the following signals/messages:
"Speed setpoint - actual value deviation within tolerance t_on" (BO: r2199.4)
"Ramp-up/ramp-down completed" (BO: r2199.5)

Notice: The parameter may be protected as a result of p0922 or p2079 and cannot be changed.

Note: The binector input is automatically pre-assigned to r1199.2.
The following applies for SERVO:
The pre-assignment using the automatic calculation of the motor/control parameters in the drive (p0340 = 1, 3, 5) is only realized if, at the instant of the calculation, the "setpoint channel" function module is active (r0108.8 = 1). If the calculation in p0340 is not selected when downloading parameters, then the parameter is not preassigned.

p2149[0...n] Monitoring configuration / Monit config

VECTOR_G	**Can be changed:** U, T	**Calculated:** -	**Access level:** 3
	Data type: Unsigned16	**Dynamic index:** DDS, p0180	**Func. diagram:** 8010, 8013
	P-Group: Messages	**Units group:** -	**Unit selection:** -
	Not for motor type: -	**Scaling:** -	**Expert list:** 1
	Min	**Max**	**Factory setting**
	-	-	0000 0000 0000 0001 bin

Description: Sets the configuration for messages and monitoring functions.

Bit field:

Bit	Signal name	1 signal	0 signal	FP
00	Enable alarm A07903	Yes	No	8010
01	Load monitoring only in the 1st quadrant	Yes	No	8013
03	n_act > p2155 own hysteresis	Yes	No	8010
15	Automatic parameterization carried out (p0340 = 1, p3900 > 0)	Yes	No	-

Dependency: Refer to: r2197
Refer to: A07903

Note: Re bit 00:
Alarm A07903 is output when the bit is set with r2197.7 = 0 (n_set <> n_act).
Re bit 01:
When the bit is set, load monitoring is only carried out in the 1st quadrant as a result of the positive characteristic parameters (p2182 ... p2190).
Re bit 03:
When the bit is set, r2197 bit 1 and bit 2 are determined via separate hystereses.
Re bit 15:
The bit indicates whether the automatic parameterization (p0340 = 1, p3900 > 0) for the parameters of the extended monitoring functions was carried out. If the bit is not set (e.g. when the configuration is activated (p0108.15)), the parameterization is automatically carried out during booting even if r3925.0 is already 1.

© Siemens AG 2012 All Rights Reserved

p2150[0...n] Hysteresis speed 3 / n_hysteresis 3

VECTOR_G	**Can be changed:** U, T	**Calculated:** CALC_MOD_LIM_REF	**Access level:** 3
	Data type: FloatingPoint32	**Dynamic index:** DDS, p0180	**Func. diagram:** 8010
	P-Group: Messages	**Units group:** 3_1	**Unit selection:** p0505
	Not for motor type: -	**Scaling:** -	**Expert list:** 1
	Min 0.00 [rpm]	**Max** 300.00 [rpm]	**Factory setting** 2.00 [rpm]

Description: Sets the hysteresis speed (bandwidth) for the following signals:
"|n_act| < speed threshold value 3" (BO: r2199.0)
"n_set >= 0" (BO: r2198.5)
"n_act >= 0" (BO: r2197.3)

Dependency: Refer to: p2161, r2197, r2199

p2151[0...n] CI: Speed setpoint for messages/signals / n_set for msg

VECTOR_G	**Can be changed:** T	**Calculated:** -	**Access level:** 3
	Data type: Unsigned32 / FloatingPoint32	**Dynamic index:** CDS, p0170	**Func. diagram:** 8010
	P-Group: Messages	**Units group:** -	**Unit selection:** -
	Not for motor type: -	**Scaling:** p2000	**Expert list:** 1
	Min -	**Max** -	**Factory setting** 1170[0]

Description: Sets the signal source for the speed setpoint for the following messages:
"Speed setpoint - actual value deviation within tolerance t_off" (BO: r2197.7)
"Ramp-up/ramp-down completed" (BO: r2199.5)
"|n_set| < p2161" (BO: r2198.4)
"n_set > 0" (BO: r2198.5)

Dependency: Refer to: r2197, r2198, r2199

p2153[0...n] Speed actual value filter time constant / n_act_filt T

VECTOR_G	**Can be changed:** U, T	**Calculated:** -	**Access level:** 3
	Data type: FloatingPoint32	**Dynamic index:** DDS, p0180	**Func. diagram:** 8010
	P-Group: Messages	**Units group:** -	**Unit selection:** -
	Not for motor type: -	**Scaling:** -	**Expert list:** 1
	Min 0 [ms]	**Max** 1000000 [ms]	**Factory setting** 0 [ms]

Description: Sets the time constant of the PT1 element to smooth the speed / velocity actual value.
The smoothed actual speed/velocity is compared with the threshold values and is only used for messages and signals.

Dependency: Refer to: r2169

p2154[0...n] CI: Speed setpoint 2 / n_set 2

VECTOR_G	**Can be changed:** T	**Calculated:** -	**Access level:** 3
	Data type: Unsigned32 / FloatingPoint32	**Dynamic index:** CDS, p0170	**Func. diagram:** 8010
	P-Group: Messages	**Units group:** -	**Unit selection:** -
	Not for motor type: -	**Scaling:** p2000	**Expert list:** 1
	Min -	**Max** -	**Factory setting** 0

Description: Sets the signal source for speed setpoint 2.
The sum of p2151 and p2154 is used for the following messages/signals:
"Speed setpoint - actual value deviation within tolerance t_off" (r2197.7)
"Speed setpoint - actual value deviation within tolerance t_on" (r2199.4)
"Ramp-up/ramp-down completed" (r2199.5)

© Siemens AG 2012 All Rights Reserved

Dependency: Refer to: p2151, r2197, r2199

p2155[0...n] Speed threshold 2 / n_thresh val 2

VECTOR_G	**Can be changed:** U, T	**Calculated:** CALC_MOD_LIM_REF	**Access level:** 3
	Data type: FloatingPoint32	**Dynamic index:** DDS, p0180	**Func. diagram:** 8010
	P-Group: Messages	**Units group:** 3_1	**Unit selection:** p0505
	Not for motor type: -	**Scaling:** -	**Expert list:** 1
	Min 0.00 [rpm]	**Max** 210000.00 [rpm]	**Factory setting** 900.00 [rpm]

Description: Sets the speed threshold value for the following messages:
"|n_act| < = speed threshold value 2" (BO: r2197.1)
"|n_act| > speed threshold value 2" (BO: r2197.2)

Dependency: Refer to: p2140, r2197

p2156[0...n] On delay, comparison value reached / t_on cmpr val rchd

VECTOR_G	**Can be changed:** U, T	**Calculated:** -	**Access level:** 2
	Data type: FloatingPoint32	**Dynamic index:** DDS, p0180	**Func. diagram:** 8010
	P-Group: Messages	**Units group:** -	**Unit selection:** -
	Not for motor type: -	**Scaling:** -	**Expert list:** 1
	Min 0.0 [ms]	**Max** 10000.0 [ms]	**Factory setting** 0.0 [ms]

Description: Sets the switch-in delay time for the signal "comparison value reached" (BO: r2199.1).

Dependency: Refer to: p2141, p2142, r2199

p2161[0...n] Speed threshold 3 / n_thresh val 3

VECTOR_G	**Can be changed:** U, T	**Calculated:** CALC_MOD_LIM_REF	**Access level:** 3
	Data type: FloatingPoint32	**Dynamic index:** DDS, p0180	**Func. diagram:** 8010
	P-Group: Messages	**Units group:** 3_1	**Unit selection:** p0505
	Not for motor type: -	**Scaling:** -	**Expert list:** 1
	Min 0.00 [rpm]	**Max** 210000.00 [rpm]	**Factory setting** 5.00 [rpm]

Description: Sets the speed threshold value for the signal "|n_act| < speed threshold value 3" (BO: r2199.0).

Dependency: Refer to: p2150, r2199

p2162[0...n] Hysteresis speed n_act > n_max / Hyst n_act>n_max

VECTOR_G	**Can be changed:** U, T	**Calculated:** CALC_MOD_LIM_REF	**Access level:** 2
	Data type: FloatingPoint32	**Dynamic index:** DDS, p0180	**Func. diagram:** 8010
	P-Group: Messages	**Units group:** 3_1	**Unit selection:** p0505
	Not for motor type: -	**Scaling:** -	**Expert list:** 1
	Min 0.00 [rpm]	**Max** 60000.00 [rpm]	**Factory setting** 0.00 [rpm]

Description: Sets the hysteresis speed (bandwidth) for the signal "n_act > n_max" (BO: r2197.6).

Dependency: Refer to: r1084, r1087, r2197

Notice: For p0322 = 0, the following applies: p2162 <= 0.1 * p0311
For p0322 > 0, the following applies: p2162 <= 1.02 * p0322 - p1082
If one of the conditions is violated, p2162 is appropriately and automatically reduced when exiting the commissioning mode.

Note: For a negative speed limit (r1087) the hysteresis is effective below the limit value and for a positive speed limit (r1084) above the limit value.

© Siemens AG 2012 All Rights Reserved

If significant overshoot occurs in the maximum speed range (e.g. due to load shedding), you are advised to increase the dynamic response of the speed controller (if possible). If this is insufficient, the hysteresis p2162 can only be increased by more than 10% of the rated speed when the maximum speed (p0322) of the motor is sufficiently greater than the speed limit p1082.

p2163[0...n] Speed threshold 4 / n_thresh val 4

VECTOR_G	**Can be changed:** U, T	**Calculated:** CALC_MOD_LIM_REF	**Access level:** 2
	Data type: FloatingPoint32	**Dynamic index:** DDS, p0180	**Func. diagram:** 8010
	P-Group: Messages	**Units group:** 3_1	**Unit selection:** p0505
	Not for motor type: -	**Scaling:** -	**Expert list:** 1
	Min 0.00 [rpm]	**Max** 210000.00 [rpm]	**Factory setting** 90.00 [rpm]

Description: Sets the speed threshold value for the "speed setpoint - actual value deviation in tolerance t_off" signal/message (BO: r2197.7).

Dependency: Refer to: p2164, p2166, r2197

p2164[0...n] Hysteresis speed 4 / n_hysteresis 4

VECTOR_G	**Can be changed:** U, T	**Calculated:** CALC_MOD_LIM_REF	**Access level:** 2
	Data type: FloatingPoint32	**Dynamic index:** DDS, p0180	**Func. diagram:** 8010
	P-Group: Messages	**Units group:** 3_1	**Unit selection:** p0505
	Not for motor type: -	**Scaling:** -	**Expert list:** 1
	Min 0.00 [rpm]	**Max** 200.00 [rpm]	**Factory setting** 2.00 [rpm]

Description: Sets the hysteresis speed (bandwidth) for the "speed setpoint - actual value deviation in tolerance t_off" signal/message (BO: r2197.7).

Dependency: Refer to: p2163, p2166, r2197

p2166[0...n] Off delay n_act = n_set / t_del_off n_i=n_so

VECTOR_G	**Can be changed:** U, T	**Calculated:** -	**Access level:** 2
	Data type: FloatingPoint32	**Dynamic index:** DDS, p0180	**Func. diagram:** 8010
	P-Group: Messages	**Units group:** -	**Unit selection:** -
	Not for motor type: -	**Scaling:** -	**Expert list:** 1
	Min 0.0 [ms]	**Max** 10000.0 [ms]	**Factory setting** 200.0 [ms]

Description: Sets the switch-off delay time for the "speed setpoint - actual value deviation in tolerance t_off" signal/message (BO: r2197.7).

Dependency: Refer to: p2163, p2164, r2197

p2167[0...n] Switch-on delay n_act = n_set / t_on n_act=n_set

VECTOR_G	**Can be changed:** U, T	**Calculated:** -	**Access level:** 2
	Data type: FloatingPoint32	**Dynamic index:** DDS, p0180	**Func. diagram:** 8010
	P-Group: Messages	**Units group:** -	**Unit selection:** -
	Not for motor type: -	**Scaling:** -	**Expert list:** 1
	Min 0.0 [ms]	**Max** 10000.0 [ms]	**Factory setting** 200.0 [ms]

Description: Sets the switch-on delay for the "speed setpoint - actual value deviation in tolerance t_on" signal/message (BO: r2199.4).

© Siemens AG 2012 All Rights Reserved

r2169 CO: Actual speed smoothed signals / n_act smth message

VECTOR_G	**Can be changed:** -	**Calculated:** -	**Access level:** 2
	Data type: FloatingPoint32	**Dynamic index:** -	**Func. diagram:** 1750, 8010, 8012, 8013
	P-Group: Messages	**Units group:** 3_1	**Unit selection:** p0505
	Not for motor type: -	**Scaling:** p2000	**Expert list:** 1
	Min - [rpm]	**Max** - [rpm]	**Factory setting** - [rpm]

Description: Displays the smoothed actual speed for messages/signals.

Dependency: Refer to: p2153

p2174[0...n] Torque threshold value 1 / M_thresh val 1

VECTOR_G	**Can be changed:** U, T	**Calculated:** -	**Access level:** 2
	Data type: FloatingPoint32	**Dynamic index:** DDS, p0180	**Func. diagram:** 8012
	P-Group: Messages	**Units group:** 7_1	**Unit selection:** p0505
	Not for motor type: -	**Scaling:** -	**Expert list:** 1
	Min 0.00 [Nm]	**Max** 20000000.00 [Nm]	**Factory setting** 5.13 [Nm]

Description: Sets the torque threshold value for the messages:
"Torque setpoint < torque threshold value 1 and n_set reached" (BO: r2198.9)
"Torque setpoint < torque threshold value 1" (BO: r2198.10)
"Torque setpoint > torque threshold value 1" (BO: r2198.13)

Dependency: Refer to: p2195, r2198

p2175[0...n] Motor blocked speed threshold / Mot lock n_thresh

VECTOR_G	**Can be changed:** U, T	**Calculated:** CALC_MOD_LIM_REF	**Access level:** 3
	Data type: FloatingPoint32	**Dynamic index:** DDS, p0180	**Func. diagram:** 8012
	P-Group: Messages	**Units group:** 3_1	**Unit selection:** p0505
	Not for motor type: -	**Scaling:** -	**Expert list:** 1
	Min 0.00 [rpm]	**Max** 210000.00 [rpm]	**Factory setting** 120.00 [rpm]

Description: Sets the speed threshold for the message "Motor blocked" (BO: r2198.6).

Dependency: Refer to: p0500, p2177, r2198

Note: The following applies for sensorless vector control:
At low speeds in open-loop speed controlled operation (see p1755, p1756), a blocked motor cannot be detected.

p2177[0...n] Motor blocked delay time / Mot lock t_del

VECTOR_G	**Can be changed:** U, T	**Calculated:** CALC_MOD_LIM_REF	**Access level:** 2
	Data type: FloatingPoint32	**Dynamic index:** DDS, p0180	**Func. diagram:** 8012
	P-Group: Messages	**Units group:** -	**Unit selection:** -
	Not for motor type: -	**Scaling:** -	**Expert list:** 1
	Min 0.000 [s]	**Max** 65.000 [s]	**Factory setting** 1.000 [s]

Description: Sets the delay time for the message "Motor blocked" (BO: r2198.6).

Dependency: Refer to: p0500, p2175, r2198

Note: The following applies for sensorless vector control:
At low speeds a locked motor can only be detected if no change is made to open-loop speed controlled operation. If this is the case, the value in p2177 must be reduced accordingly (p2177 < p1758) before time p2177 has elapsed in order to detect the locked state reliably.

© Siemens AG 2012 All Rights Reserved

As countermeasure, it is generally also possible to set p1750.6. This is only not permitted if the drive is slowly reversed by the load at the torque limit (speed below p1755 for longer than p1758).

p2178[0...n] Motor stalled delay time / Mot stall t_del

VECTOR_G	**Can be changed:** U, T	**Calculated:** CALC_MOD_REG	**Access level:** 3
	Data type: FloatingPoint32	**Dynamic index:** DDS, p0180	**Func. diagram:** 8012
	P-Group: Messages	**Units group:** -	**Unit selection:** -
	Not for motor type: -	**Scaling:** -	**Expert list:** 1
	Min	**Max**	**Factory setting**
	0.000 [s]	10.000 [s]	0.010 [s]

Description: Sets the delay time for the message "Motor stalled" (BO: r2198.7).

Dependency: Refer to: r2198

p2181[0...n] Load monitoring response / Load monit resp

VECTOR_G (Ext msg)	**Can be changed:** U, T	**Calculated:** -	**Access level:** 3
	Data type: Integer16	**Dynamic index:** DDS, p0180	**Func. diagram:** 8013
	P-Group: Messages	**Units group:** -	**Unit selection:** -
	Not for motor type: -	**Scaling:** -	**Expert list:** 1
	Min	**Max**	**Factory setting**
	0	6	0

Description: Sets the response when evaluating the load monitoring.

Value:
0: Load monitoring disabled
1: A07920 for torque/speed too low
2: A07921 for torque/speed too high
3: A07922 for torque/speed out of tolerance
4: F07923 for torque/speed too low
5: F07924 for torque/speed too high
6: F07925 for torque/speed out of tolerance

Dependency: Refer to: p2182, p2183, p2184, p2185, p2186, p2187, p2188, p2189, p2190, p2192, r2198
Refer to: A07920, A07921, A07922, F07923, F07924, F07925

Note: The response to the faults F07923 ... F07925 can be set. F07926 is evaluated only if p2181 is not zero.

p2182[0...n] Load monitoring speed threshold value 1 / n_thresh 1

VECTOR_G (Ext msg)	**Can be changed:** U, T	**Calculated:** -	**Access level:** 3
	Data type: FloatingPoint32	**Dynamic index:** DDS, p0180	**Func. diagram:** 8013
	P-Group: Messages	**Units group:** 3_1	**Unit selection:** p0505
	Not for motor type: -	**Scaling:** -	**Expert list:** 1
	Min	**Max**	**Factory setting**
	0.00 [rpm]	210000.00 [rpm]	150.00 [rpm]

Description: Sets the speed/torque envelope curve for load monitoring.
The envelope curve (upper and lower envelope curve) is defined as follows based on 3 speed thresholds:
p2182 (n_threshold 1) --> p2185 (M_threshold 1, upper), p2186 (M_threshold 1, lower)
p2183 (n_threshold 2) --> p2187 (M_threshold 2, upper), p2188 (M_threshold 2, lower)
p2184 (n_threshold 3) --> p2189 (M_threshold 3, upper), p2190 (M_threshold 3, lower)

Dependency: The following applies: p2182 < p2183 < p2184
Refer to: p2183, p2184, p2185, p2186

© Siemens AG 2012 All Rights Reserved

p2183[0...n] Load monitoring speed threshold value 2 / n_thresh 2

VECTOR_G (Ext msg)

Can be changed: U, T	**Calculated:** -	**Access level:** 3
Data type: FloatingPoint32	**Dynamic index:** DDS, p0180	**Func. diagram:** 8013
P-Group: Messages	**Units group:** 3_1	**Unit selection:** p0505
Not for motor type: -	**Scaling:** -	**Expert list:** 1
Min	**Max**	**Factory setting**
0.00 [rpm]	210000.00 [rpm]	900.00 [rpm]

Description: Sets the speed/torque envelope curve for load monitoring.
The envelope curve (upper and lower envelope curve) is defined as follows based on 3 speed thresholds:
p2182 (n_threshold 1) --> p2185 (M_threshold 1, upper), p2186 (M_threshold 1, lower)
p2183 (n_threshold 2) --> p2187 (M_threshold 2, upper), p2188 (M_threshold 2, lower)
p2184 (n_threshold 3) --> p2189 (M_threshold 3, upper), p2190 (M_threshold 3, lower)

Dependency: The following applies: p2182 < p2183 < p2184
Refer to: p2182, p2184, p2187, p2188

p2184[0...n] Load monitoring speed threshold value 3 / n_thresh 3

VECTOR_G (Ext msg)

Can be changed: U, T	**Calculated:** -	**Access level:** 3
Data type: FloatingPoint32	**Dynamic index:** DDS, p0180	**Func. diagram:** 8013
P-Group: Messages	**Units group:** 3_1	**Unit selection:** p0505
Not for motor type: -	**Scaling:** -	**Expert list:** 1
Min	**Max**	**Factory setting**
0.00 [rpm]	210000.00 [rpm]	1500.00 [rpm]

Description: Sets the speed/torque envelope curve for load monitoring.
The envelope curve (upper and lower envelope curve) is defined as follows based on 3 speed thresholds:
p2182 (n_threshold 1) --> p2185 (M_threshold 1, upper), p2186 (M_threshold 1, lower)
p2183 (n_threshold 2) --> p2187 (M_threshold 2, upper), p2188 (M_threshold 2, lower)
p2184 (n_threshold 3) --> p2189 (M_threshold 3, upper), p2190 (M_threshold 3, lower)

Dependency: The following applies: p2182 < p2183 < p2184
Refer to: p2182, p2183, p2189, p2190

p2185[0...n] Load monitoring torque threshold 1, upper / M_thresh 1 upper

VECTOR_G (Ext msg)

Can be changed: U, T	**Calculated:** -	**Access level:** 3
Data type: FloatingPoint32	**Dynamic index:** DDS, p0180	**Func. diagram:** 8013
P-Group: Messages	**Units group:** 7_1	**Unit selection:** p0505
Not for motor type: -	**Scaling:** -	**Expert list:** 1
Min	**Max**	**Factory setting**
0.00 [Nm]	20000000.00 [Nm]	10000000.00 [Nm]

Description: Sets the speed/torque / velocity/force envelope curve for the load monitoring.

Dependency: The following applies: p2185 > p2186
Refer to: p2182, p2186

Note: The upper envelope curve is defined by p2185, p2187 and p2189.

p2186[0...n] Load monitoring torque threshold 1, lower / M_thresh 1 lower

VECTOR_G (Ext msg)

Can be changed: U, T	**Calculated:** -	**Access level:** 3
Data type: FloatingPoint32	**Dynamic index:** DDS, p0180	**Func. diagram:** 8013
P-Group: Messages	**Units group:** 7_1	**Unit selection:** p0505
Not for motor type: -	**Scaling:** -	**Expert list:** 1
Min	**Max**	**Factory setting**
0.00 [Nm]	20000000.00 [Nm]	0.00 [Nm]

Description: Sets the speed/torque / velocity/force envelope curve for the load monitoring.

© Siemens AG 2012 All Rights Reserved

Dependency: The following applies: p2186 < p2185
Refer to: p2182, p2185
Note: The lower envelope curve is defined by p2186, p2188 and p2190.

p2187[0...n] Load monitoring torque threshold 2, upper / M_thresh 2 upper

VECTOR_G (Ext msg)

Can be changed: U, T	**Calculated:** -	**Access level:** 3
Data type: FloatingPoint32	**Dynamic index:** DDS, p0180	**Func. diagram:** 8013
P-Group: Messages	**Units group:** 7_1	**Unit selection:** p0505
Not for motor type: -	**Scaling:** -	**Expert list:** 1
Min 0.00 [Nm]	**Max** 20000000.00 [Nm]	**Factory setting** 10000000.00 [Nm]

Description: Sets the speed/torque / velocity/force envelope curve for the load monitoring.
Dependency: The following applies: p2187 > p2188
Refer to: p2183, p2188
Note: The upper envelope curve is defined by p2185, p2187 and p2189.

p2188[0...n] Load monitoring torque threshold 2, lower / M_thresh 2 lower

VECTOR_G (Ext msg)

Can be changed: U, T	**Calculated:** -	**Access level:** 3
Data type: FloatingPoint32	**Dynamic index:** DDS, p0180	**Func. diagram:** 8013
P-Group: Messages	**Units group:** 7_1	**Unit selection:** p0505
Not for motor type: -	**Scaling:** -	**Expert list:** 1
Min 0.00 [Nm]	**Max** 20000000.00 [Nm]	**Factory setting** 0.00 [Nm]

Description: Sets the speed/torque / velocity/force envelope curve for the load monitoring.
Dependency: The following applies: p2188 < p2187
Refer to: p2183, p2187
Note: The lower envelope curve is defined by p2186, p2188 and p2190.

p2189[0...n] Load monitoring torque threshold 3, upper / M_thresh 3 upper

VECTOR_G (Ext msg)

Can be changed: U, T	**Calculated:** -	**Access level:** 3
Data type: FloatingPoint32	**Dynamic index:** DDS, p0180	**Func. diagram:** 8013
P-Group: Messages	**Units group:** 7_1	**Unit selection:** p0505
Not for motor type: -	**Scaling:** -	**Expert list:** 1
Min 0.00 [Nm]	**Max** 20000000.00 [Nm]	**Factory setting** 10000000.00 [Nm]

Description: Sets the speed/torque / velocity/force envelope curve for the load monitoring.
Dependency: The following applies: p2189 > p2190
Refer to: p2184, p2190
Note: The upper envelope curve is defined by p2185, p2187 and p2189.

p2190[0...n] Load monitoring torque threshold 3, lower / M_thresh 3 lower

VECTOR_G (Ext msg)

Can be changed: U, T	**Calculated:** -	**Access level:** 3
Data type: FloatingPoint32	**Dynamic index:** DDS, p0180	**Func. diagram:** 8013
P-Group: Messages	**Units group:** 7_1	**Unit selection:** p0505
Not for motor type: -	**Scaling:** -	**Expert list:** 1
Min 0.00 [Nm]	**Max** 20000000.00 [Nm]	**Factory setting** 0.00 [Nm]

Description: Sets the speed/torque / velocity/force envelope curve for the load monitoring.
Dependency: The following applies: p2190 < p2189
Refer to: p2184, p2189
Note: The lower envelope curve is defined by p2186, p2188 and p2190.

© Siemens AG 2012 All Rights Reserved

p2192[0...n] Load monitoring delay time / Load monit t_del

VECTOR_G (Ext msg)	**Can be changed:** U, T	**Calculated:** -	**Access level:** 3
	Data type: FloatingPoint32	**Dynamic index:** DDS, p0180	**Func. diagram:** 8013
	P-Group: Messages	**Units group:** -	**Unit selection:** -
	Not for motor type: -	**Scaling:** -	**Expert list:** 1
	Min	**Max**	**Factory setting**
	0.00 [s]	65.00 [s]	10.00 [s]

Description: Sets the delay time to evaluate the load monitoring.

p2194[0...n] Torque threshold value 2 / M_thresh val 2

VECTOR_G	**Can be changed:** U, T	**Calculated:** CALC_MOD_LIM_REF	**Access level:** 2
	Data type: FloatingPoint32	**Dynamic index:** DDS, p0180	**Func. diagram:** 8012
	P-Group: Messages	**Units group:** -	**Unit selection:** -
	Not for motor type: -	**Scaling:** -	**Expert list:** 1
	Min	**Max**	**Factory setting**
	0.00 [%]	100.00 [%]	90.00 [%]

Description: Sets the torque threshold value for the message "Torque utilization < torque threshold value 2" (BO: r2199.11).

The message "torque setpoint < p2174" (BO: r2198.10) and "torque utilization < p2194" (BO: r2199.11) are only evaluated after the run-up and the delay time has expired.

Dependency: Refer to: r0033, p2195, r2199

p2195[0...n] Torque utilization switch-off delay / M_util t_off

VECTOR_G	**Can be changed:** U, T	**Calculated:** -	**Access level:** 2
	Data type: FloatingPoint32	**Dynamic index:** DDS, p0180	**Func. diagram:** 8012
	P-Group: Messages	**Units group:** -	**Unit selection:** -
	Not for motor type: -	**Scaling:** -	**Expert list:** 1
	Min	**Max**	**Factory setting**
	0.0 [ms]	1000.0 [ms]	800.0 [ms]

Description: Sets the switch-off delay time for the negated signal "run-up completed".

The message "torque setpoint < p2174" (BO: r2198.10) and "torque utilization < p2194" (BO: r2199.11) are only evaluated after the run-up and the delay time has expired.

Dependency: Refer to: p2174, p2194

p2196[0...n] Torque utilization scaling / M_util scal

VECTOR_G	**Can be changed:** C2(1, 3), U, T	**Calculated:** -	**Access level:** 1
	Data type: FloatingPoint32	**Dynamic index:** DDS, p0180	**Func. diagram:** -
	P-Group: Motor	**Units group:** -	**Unit selection:** -
	Not for motor type: -	**Scaling:** -	**Expert list:** 1
	Min	**Max**	**Factory setting**
	0.00 [%]	1000.00 [%]	100.00 [%]

Description: Sets the scaling factor for torque utilization (r0033).

r2197.1...13 CO/BO: Status word monitoring 1 / ZSW monitor 1

VECTOR_G	**Can be changed:** -	**Calculated:** -	**Access level:** 2
	Data type: Unsigned16	**Dynamic index:** -	**Func. diagram:** 1530, 2534
	P-Group: Messages	**Units group:** -	**Unit selection:** -
	Not for motor type: -	**Scaling:** -	**Expert list:** 1
	Min	**Max**	**Factory setting**
	-	-	-

Description: Displays the first status word for monitoring functions.

© Siemens AG 2012 All Rights Reserved

Bit field:

Bit	Signal name	1 signal	0 signal	FP
01	|n_act| <= speed threshold value 2 p2155	Yes	No	8010
02	|n_act| > speed threshold value 2 p2155	Yes	No	8010
03	n_act >= 0	Yes	No	8011
06	|n_act| > n_max	Yes	No	8010
07	Speed setp - act val deviation in tolerance t_off	Yes	No	8011
13	|n_act| > n_max (F07901)	Yes	No	-

Note:

Re bit 01, 02:

The threshold value is set in p2155 and the hysteresis in p2140.

Re bit 03:

The hysteresis is set in p2150.

Re bit 06:

The hysteresis is set in p2162.

Re bit 07:

The threshold value is set in p2163 and the hysteresis is set in p2164.

Re bit 13:

Only for internal Siemens use.

r2198.4...12 CO/BO: Status word monitoring 2 / ZSW monitor 2

VECTOR_G

Can be changed: -	**Calculated:** -	**Access level:** 2
Data type: Unsigned16	**Dynamic index:** -	**Func. diagram:** 1530, 2536
P-Group: Messages	**Units group:** -	**Unit selection:** -
Not for motor type: -	**Scaling:** -	**Expert list:** 1
Min	**Max**	**Factory setting**
-	-	-

Description:

Displays the second status word for monitoring functions.

Bit field:

Bit	Signal name	1 signal	0 signal	FP
04	|n_set| < p2161	Yes	No	8011
05	n_set > 0	Yes	No	8011
06	Motor blocked	Yes	No	8012
07	Motor stalled	Yes	No	8012
10	|M_set| < torque threshold value 1	Yes	No	8012
11	Load monitoring signals an alarm	Yes	No	8013
12	Load monitoring signals a fault condition	Yes	No	8013

Note:

Re bit 10:

The torque threshold value 1 is set in p2174.

Re bit 12:

This bit is reset after the fault cause disappears, even if the fault itself is still present.

r2199.0...12 CO/BO: Status word monitoring 3 / ZSW monitor 3

VECTOR_G

Can be changed: -	**Calculated:** -	**Access level:** 2
Data type: Unsigned16	**Dynamic index:** -	**Func. diagram:** 1530, 2537, 8018
P-Group: Messages	**Units group:** -	**Unit selection:** -
Not for motor type: -	**Scaling:** -	**Expert list:** 1
Min	**Max**	**Factory setting**
-	-	-

Description:

Displays the third status word for monitoring functions.

Bit field:

Bit	Signal name	1 signal	0 signal	FP
00	|n_act| < speed threshold value 3	Yes	No	8010
01	f or n comparison value reached or exceeded	Yes	No	8010
04	Speed setp - act val deviation in tolerance t_on	Yes	No	8010
05	Ramp-up/ramp-down completed	Yes	No	8010

© Siemens AG 2012 All Rights Reserved

06	Current below the zero current threshold	Yes	No	-
07	Speed deviation model/external in tolerance	Yes	No	8012
11	Torque utilization < torque threshold value 2	Yes	No	8012
12	Excitation current outside the tolerance range	Yes	No	8018

Note: Re bit 00:

The speed threshold value 3 is set in p2161.

Re bit 01:

The comparison value is set in p2141. We recommend setting the hysteresis (p2142) for canceling the bit to a value lower than that in p2141. Otherwise, the bit is not reset.

Re bit 11:

The torque threshold value 2 is set in p2194.

p2200[0...n] BI: Technology controller enable / Tec_ctrl enable

VECTOR_G (Tech_ctrl)

Can be changed: T	**Calculated:** -	**Access level:** 2
Data type: Unsigned32 / Binary	**Dynamic index:** CDS, p0170	**Func. diagram:** 7958
P-Group: Technology	**Units group:** -	**Unit selection:** -
Not for motor type: -	**Scaling:** -	**Expert list:** 1
Min	**Max**	**Factory setting**
-	-	0

Description: Sets the signal source to switch in/switch out the technology controller.

The technology controller is switched in with a 1 signal.

p2201[0...n] CO: Technology controller, fixed value 1 / Tec_ctrl fix val1

VECTOR_G (Tech_ctrl)

Can be changed: U, T	**Calculated:** -	**Access level:** 2
Data type: FloatingPoint32	**Dynamic index:** DDS, p0180	**Func. diagram:** 7950
P-Group: Technology	**Units group:** 9_1	**Unit selection:** p0595
Not for motor type: -	**Scaling:** PERCENT	**Expert list:** 1
Min	**Max**	**Factory setting**
-200.00 [%]	200.00 [%]	10.00 [%]

Description: Sets the value for fixed value 1 of the technology controller.

Dependency: Refer to: p2220, p2221, p2222, p2223, r2224, r2229

Notice: A BICO interconnection to a parameter that belongs to a drive data set always acts on the effective data set.

p2202[0...n] CO: Technology controller, fixed value 2 / Tec_ctr fix val 2

VECTOR_G (Tech_ctrl)

Can be changed: U, T	**Calculated:** -	**Access level:** 2
Data type: FloatingPoint32	**Dynamic index:** DDS, p0180	**Func. diagram:** 7950
P-Group: Technology	**Units group:** 9_1	**Unit selection:** p0595
Not for motor type: -	**Scaling:** PERCENT	**Expert list:** 1
Min	**Max**	**Factory setting**
-200.00 [%]	200.00 [%]	20.00 [%]

Description: Sets the value for fixed value 2 of the technology controller.

Dependency: Refer to: p2220, p2221, p2222, p2223, r2224, r2229

Notice: A BICO interconnection to a parameter that belongs to a drive data set always acts on the effective data set.

p2203[0...n] CO: Technology controller, fixed value 3 / Tec_ctr fix val 3

VECTOR_G (Tech_ctrl)

Can be changed: U, T	**Calculated:** -	**Access level:** 2
Data type: FloatingPoint32	**Dynamic index:** DDS, p0180	**Func. diagram:** 7950
P-Group: Technology	**Units group:** 9_1	**Unit selection:** p0595
Not for motor type: -	**Scaling:** PERCENT	**Expert list:** 1
Min	**Max**	**Factory setting**
-200.00 [%]	200.00 [%]	30.00 [%]

Description: Sets the value for fixed value 3 of the technology controller.

© Siemens AG 2012 All Rights Reserved

Dependency: Refer to: p2220, p2221, p2222, p2223, r2224, r2229
Notice: A BICO interconnection to a parameter that belongs to a drive data set always acts on the effective data set.

p2204[0...n] CO: Technology controller, fixed value 4 / Tec_ctr fix val 4

VECTOR_G (Tech_ctrl)

Can be changed: U, T	**Calculated:** -	**Access level:** 2
Data type: FloatingPoint32	**Dynamic index:** DDS, p0180	**Func. diagram:** 7950
P-Group: Technology	**Units group:** 9_1	**Unit selection:** p0595
Not for motor type: -	**Scaling:** PERCENT	**Expert list:** 1
Min	**Max**	**Factory setting**
-200.00 [%]	200.00 [%]	40.00 [%]

Description: Sets the value for fixed value 4 of the technology controller.
Dependency: Refer to: p2220, p2221, p2222, p2223, r2224, r2229
Notice: A BICO interconnection to a parameter that belongs to a drive data set always acts on the effective data set.

p2205[0...n] CO: Technology controller, fixed value 5 / Tec_ctr fix val 5

VECTOR_G (Tech_ctrl)

Can be changed: U, T	**Calculated:** -	**Access level:** 2
Data type: FloatingPoint32	**Dynamic index:** DDS, p0180	**Func. diagram:** 7950
P-Group: Technology	**Units group:** 9_1	**Unit selection:** p0595
Not for motor type: -	**Scaling:** PERCENT	**Expert list:** 1
Min	**Max**	**Factory setting**
-200.00 [%]	200.00 [%]	50.00 [%]

Description: Sets the value for fixed value 5 of the technology controller.
Dependency: Refer to: p2220, p2221, p2222, p2223, r2224, r2229
Notice: A BICO interconnection to a parameter that belongs to a drive data set always acts on the effective data set.

p2206[0...n] CO: Technology controller, fixed value 6 / Tec_ctr fix val 6

VECTOR_G (Tech_ctrl)

Can be changed: U, T	**Calculated:** -	**Access level:** 2
Data type: FloatingPoint32	**Dynamic index:** DDS, p0180	**Func. diagram:** 7950
P-Group: Technology	**Units group:** 9_1	**Unit selection:** p0595
Not for motor type: -	**Scaling:** PERCENT	**Expert list:** 1
Min	**Max**	**Factory setting**
-200.00 [%]	200.00 [%]	60.00 [%]

Description: Sets the value for fixed value 6 of the technology controller.
Dependency: Refer to: p2220, p2221, p2222, p2223, r2224, r2229
Notice: A BICO interconnection to a parameter that belongs to a drive data set always acts on the effective data set.

p2207[0...n] CO: Technology controller, fixed value 7 / Tec_ctr fix val 7

VECTOR_G (Tech_ctrl)

Can be changed: U, T	**Calculated:** -	**Access level:** 2
Data type: FloatingPoint32	**Dynamic index:** DDS, p0180	**Func. diagram:** 7950
P-Group: Technology	**Units group:** 9_1	**Unit selection:** p0595
Not for motor type: -	**Scaling:** PERCENT	**Expert list:** 1
Min	**Max**	**Factory setting**
-200.00 [%]	200.00 [%]	70.00 [%]

Description: Sets the value for fixed value 7 of the technology controller.
Dependency: Refer to: p2220, p2221, p2222, p2223, r2224, r2229
Notice: A BICO interconnection to a parameter that belongs to a drive data set always acts on the effective data set.

© Siemens AG 2012 All Rights Reserved

p2208[0...n] CO: Technology controller, fixed value 8 / Tec_ctr fix val 8

VECTOR_G (Tech_ctrl)	**Can be changed:** U, T	**Calculated:** -	**Access level:** 2
	Data type: FloatingPoint32	**Dynamic index:** DDS, p0180	**Func. diagram:** 7950
	P-Group: Technology	**Units group:** 9_1	**Unit selection:** p0595
	Not for motor type: -	**Scaling:** PERCENT	**Expert list:** 1
	Min	**Max**	**Factory setting**
	-200.00 [%]	200.00 [%]	80.00 [%]

Description: Sets the value for fixed value 8 of the technology controller.

Dependency: Refer to: p2220, p2221, p2222, p2223, r2224, r2229

Notice: A BICO interconnection to a parameter that belongs to a drive data set always acts on the effective data set.

p2209[0...n] CO: Technology controller, fixed value 9 / Tec_ctr fix val 9

VECTOR_G (Tech_ctrl)	**Can be changed:** U, T	**Calculated:** -	**Access level:** 2
	Data type: FloatingPoint32	**Dynamic index:** DDS, p0180	**Func. diagram:** 7950
	P-Group: Technology	**Units group:** 9_1	**Unit selection:** p0595
	Not for motor type: -	**Scaling:** PERCENT	**Expert list:** 1
	Min	**Max**	**Factory setting**
	-200.00 [%]	200.00 [%]	90.00 [%]

Description: Sets the value for fixed value 9 of the technology controller.

Dependency: Refer to: p2220, p2221, p2222, p2223, r2224, r2229

Notice: A BICO interconnection to a parameter that belongs to a drive data set always acts on the effective data set.

p2210[0...n] CO: Technology controller, fixed value 10 / Tec_ctr fix val 10

VECTOR_G (Tech_ctrl)	**Can be changed:** U, T	**Calculated:** -	**Access level:** 2
	Data type: FloatingPoint32	**Dynamic index:** DDS, p0180	**Func. diagram:** 7950
	P-Group: Technology	**Units group:** 9_1	**Unit selection:** p0595
	Not for motor type: -	**Scaling:** PERCENT	**Expert list:** 1
	Min	**Max**	**Factory setting**
	-200.00 [%]	200.00 [%]	100.00 [%]

Description: Sets the value for fixed value 10 of the technology controller.

Dependency: Refer to: p2220, p2221, p2222, p2223, r2224, r2229

Notice: A BICO interconnection to a parameter that belongs to a drive data set always acts on the effective data set.

p2211[0...n] CO: Technology controller, fixed value 11 / Tec_ctr fix val 11

VECTOR_G (Tech_ctrl)	**Can be changed:** U, T	**Calculated:** -	**Access level:** 2
	Data type: FloatingPoint32	**Dynamic index:** DDS, p0180	**Func. diagram:** 7950
	P-Group: Technology	**Units group:** 9_1	**Unit selection:** p0595
	Not for motor type: -	**Scaling:** PERCENT	**Expert list:** 1
	Min	**Max**	**Factory setting**
	-200.00 [%]	200.00 [%]	110.00 [%]

Description: Sets the value for fixed value 11 of the technology controller.

Dependency: Refer to: p2220, p2221, p2222, p2223, r2224, r2229

Notice: A BICO interconnection to a parameter that belongs to a drive data set always acts on the effective data set.

© Siemens AG 2012 All Rights Reserved

p2212[0...n] CO: Technology controller, fixed value 12 / Tec_ctr fix val 12

VECTOR_G (Tech_ctrl)

Can be changed: U, T	**Calculated:** -	**Access level:** 2
Data type: FloatingPoint32	**Dynamic index:** DDS, p0180	**Func. diagram:** 7950
P-Group: Technology	**Units group:** 9_1	**Unit selection:** p0595
Not for motor type: -	**Scaling:** PERCENT	**Expert list:** 1
Min	**Max**	**Factory setting**
-200.00 [%]	200.00 [%]	120.00 [%]

Description: Sets the value for fixed value 12 of the technology controller.

Dependency: Refer to: p2220, p2221, p2222, p2223, r2224, r2229

Notice: A BICO interconnection to a parameter that belongs to a drive data set always acts on the effective data set.

p2213[0...n] CO: Technology controller, fixed value 13 / Tec_ctr fix val 13

VECTOR_G (Tech_ctrl)

Can be changed: U, T	**Calculated:** -	**Access level:** 2
Data type: FloatingPoint32	**Dynamic index:** DDS, p0180	**Func. diagram:** 7950
P-Group: Technology	**Units group:** 9_1	**Unit selection:** p0595
Not for motor type: -	**Scaling:** PERCENT	**Expert list:** 1
Min	**Max**	**Factory setting**
-200.00 [%]	200.00 [%]	130.00 [%]

Description: Sets the value for fixed value 13 of the technology controller.

Dependency: Refer to: p2220, p2221, p2222, p2223, r2224, r2229

Notice: A BICO interconnection to a parameter that belongs to a drive data set always acts on the effective data set.

p2214[0...n] CO: Technology controller, fixed value 14 / Tec_ctr fix val 14

VECTOR_G (Tech_ctrl)

Can be changed: U, T	**Calculated:** -	**Access level:** 2
Data type: FloatingPoint32	**Dynamic index:** DDS, p0180	**Func. diagram:** 7950
P-Group: Technology	**Units group:** 9_1	**Unit selection:** p0595
Not for motor type: -	**Scaling:** PERCENT	**Expert list:** 1
Min	**Max**	**Factory setting**
-200.00 [%]	200.00 [%]	140.00 [%]

Description: Sets the value for fixed value 14 of the technology controller.

Dependency: Refer to: p2220, p2221, p2222, p2223, r2224, r2229

Notice: A BICO interconnection to a parameter that belongs to a drive data set always acts on the effective data set.

p2215[0...n] CO: Technology controller, fixed value 15 / Tec_ctr fix val 15

VECTOR_G (Tech_ctrl)

Can be changed: U, T	**Calculated:** -	**Access level:** 2
Data type: FloatingPoint32	**Dynamic index:** DDS, p0180	**Func. diagram:** 7950
P-Group: Technology	**Units group:** 9_1	**Unit selection:** p0595
Not for motor type: -	**Scaling:** PERCENT	**Expert list:** 1
Min	**Max**	**Factory setting**
-200.00 [%]	200.00 [%]	150.00 [%]

Description: Sets the value for fixed value 15 of the technology controller.

Dependency: Refer to: p2220, p2221, p2222, p2223, r2224, r2229

Notice: A BICO interconnection to a parameter that belongs to a drive data set always acts on the effective data set.

© Siemens AG 2012 All Rights Reserved

p2216[0...n] Technology controller fixed value selection method / Tec_ctr FixVal sel

VECTOR_G (Tech_ctrl)

Can be changed: T	**Calculated:** -	**Access level:** 2
Data type: Integer16	**Dynamic index:** DDS, p0180	**Func. diagram:** -
P-Group: Technology	**Units group:** -	**Unit selection:** -
Not for motor type: -	**Scaling:** -	**Expert list:** 1
Min	**Max**	**Factory setting**
1	2	2

Description: Sets the method to select the fixed setpoints.

Value:
1: Direct selection
2: Binary selection

p2220[0...n] BI: Technology controller fixed value selection bit 0 / Tec_ctrl sel bit 0

VECTOR_G (Tech_ctrl)

Can be changed: T	**Calculated:** -	**Access level:** 3
Data type: Unsigned32 / Binary	**Dynamic index:** CDS, p0170	**Func. diagram:** 7950
P-Group: Commands	**Units group:** -	**Unit selection:** -
Not for motor type: -	**Scaling:** -	**Expert list:** 1
Min	**Max**	**Factory setting**
-	-	0

Description: Sets the signal source to select the fixed value of the technology controller.

Dependency: Refer to: p2221, p2222, p2223

p2221[0...n] BI: Technology controller fixed value selection bit 1 / Tec_ctrl sel bit 1

VECTOR_G (Tech_ctrl)

Can be changed: T	**Calculated:** -	**Access level:** 3
Data type: Unsigned32 / Binary	**Dynamic index:** CDS, p0170	**Func. diagram:** 7950
P-Group: Commands	**Units group:** -	**Unit selection:** -
Not for motor type: -	**Scaling:** -	**Expert list:** 1
Min	**Max**	**Factory setting**
-	-	0

Description: Sets the signal source to select the fixed value of the technology controller.

Dependency: Refer to: p2220, p2222, p2223

p2222[0...n] BI: Technology controller fixed value selection bit 2 / Tec_ctrl sel bit 2

VECTOR_G (Tech_ctrl)

Can be changed: T	**Calculated:** -	**Access level:** 3
Data type: Unsigned32 / Binary	**Dynamic index:** CDS, p0170	**Func. diagram:** 7950
P-Group: Commands	**Units group:** -	**Unit selection:** -
Not for motor type: -	**Scaling:** -	**Expert list:** 1
Min	**Max**	**Factory setting**
-	-	0

Description: Sets the signal source to select the fixed value of the technology controller.

Dependency: Refer to: p2220, p2221, p2223

p2223[0...n] BI: Technology controller fixed value selection bit 3 / Tec_ctrl sel bit 3

VECTOR_G (Tech_ctrl)

Can be changed: T	**Calculated:** -	**Access level:** 3
Data type: Unsigned32 / Binary	**Dynamic index:** CDS, p0170	**Func. diagram:** 7950
P-Group: Commands	**Units group:** -	**Unit selection:** -
Not for motor type: -	**Scaling:** -	**Expert list:** 1
Min	**Max**	**Factory setting**
-	-	0

Description: Sets the signal source to select the fixed value of the technology controller.

Dependency: Refer to: p2220, p2221, p2222

© Siemens AG 2012 All Rights Reserved

r2224 CO: Technology controller, fixed value effective / Tec_ctr FixVal eff

VECTOR_G (Tech_ctrl)

Can be changed: -	**Calculated:** -	**Access level:** 2
Data type: FloatingPoint32	**Dynamic index:** -	**Func. diagram:** 7950
P-Group: Technology	**Units group:** 9_1	**Unit selection:** p0595
Not for motor type: -	**Scaling:** PERCENT	**Expert list:** 1
Min	**Max**	**Factory setting**
- [%]	- [%]	- [%]

Description: Displays the selected and effective fixed value of the technology controller.

Dependency: Refer to: r2229

r2225.0 CO/BO: Technology controller fixed value selection status word / Tec_ctr FixVal ZSW

VECTOR_G (Tech_ctrl)

Can be changed: -	**Calculated:** -	**Access level:** 3
Data type: Unsigned16	**Dynamic index:** -	**Func. diagram:** -
P-Group: Technology	**Units group:** -	**Unit selection:** -
Not for motor type: -	**Scaling:** -	**Expert list:** 1
Min	**Max**	**Factory setting**
-	-	-

Description: Displays the status word for the fixed value selection of the technology controller.

Bit field:

Bit	Signal name	1 signal	0 signal	FP
00	Technology controller fixed value selected	Yes	No	7950, 7951

r2229 Technology controller number actual / Tec_ctrl No. act

VECTOR_G (Tech_ctrl)

Can be changed: -	**Calculated:** -	**Access level:** 2
Data type: Unsigned32	**Dynamic index:** -	**Func. diagram:** 7950
P-Group: Technology	**Units group:** -	**Unit selection:** -
Not for motor type: -	**Scaling:** -	**Expert list:** 1
Min	**Max**	**Factory setting**
-	-	-

Description: Displays the number of the selected fixed setpoint of the technology controller.

Dependency: Refer to: r2224

p2230[0...n] Technology controller motorized potentiometer configuration / Tec_ctr mop config

VECTOR_G (Tech_ctrl)

Can be changed: U, T	**Calculated:** -	**Access level:** 3
Data type: Unsigned32	**Dynamic index:** DDS, p0180	**Func. diagram:** 7954
P-Group: Technology	**Units group:** -	**Unit selection:** -
Not for motor type: -	**Scaling:** -	**Expert list:** 1
Min	**Max**	**Factory setting**
-	-	0000 0100 bin

Description: Sets the configuration for the motorized potentiometer of the technology controller.

Bit field:

Bit	Signal name	1 signal	0 signal	FP
00	Data save active	Yes	No	-
02	Initial rounding-off active	Yes	No	-
03	Non-volatile data save active for p2230.0 = 1	Yes	No	-
04	Ramp-function generator always active	Yes	No	-

Dependency: Refer to: r2231, p2240

Notice: The following prerequisites must be fulfilled in order to be able to save the setpoint in a non-volatile fashion:
- Firmware with V2.3 or higher.
- Control Unit 320 (CU320) with hardware version C or higher (module with NVRAM).

© Siemens AG 2012 All Rights Reserved

Note: Re bit 00:

0: The setpoint for the motorized potentiometer is not saved and after ON is entered using p2240.

1: The setpoint for the motorized potentiometer is saved and after ON is entered using r2231. In order to save in a non-volatile fashion, bit 03 should be set to 1.

Re bit 02:

0: Without initial rounding-off

1: With initial rounding-off.

The selected ramp-up/down time is correspondingly exceeded. The initial rounding-off is a sensitive way of specifying small changes (progressive reaction when keys are pressed). The jerk for initial rounding is independent of the ramp-up time and only depends on the selected maximum value (p2237).

It is calculated as follows:

r = 0.0001 x max(p2237, |p2238|) [%] / 0.13^2 [s^2]

The jerk is effective until the maximum acceleration is reached (a_max = p2237 [%] / p2247 [s] or a_max = p2238 [%] / p2248 [s]), after which the drive continues to run linearly with constant acceleration. The higher the maximum acceleration (the lower that p2247 is), the longer the ramp-up time increases with respect to the set ramp-up time.

Re bit 03:

0: Non-volatile data save de-activated.

1. The setpoint for the motorized potentiometer is saved in a non-volatile fashion (for p2230.0 = 1).

Re bit 04:

When the bit is set, the ramp-function generator is computed independent of the pulse enable. The actual output value of the motorized potentiometer is always in r2250.

r2231 Technology controller motorized potentiometer setpoint memory / Tec_ctrl mop mem

VECTOR_G (Tech_ctrl)

Can be changed: -	**Calculated:** -	**Access level:** 2
Data type: FloatingPoint32	**Dynamic index:** -	**Func. diagram:** 7954
P-Group: Technology	**Units group:** 9_1	**Unit selection:** p0595
Not for motor type: -	**Scaling:** -	**Expert list:** 1
Min	**Max**	**Factory setting**
- [%]	- [%]	- [%]

Description: Displays the setpoint memory for the motorized potentiometer of the technology controller.

For p2230.0 = 1, the last setpoint that was saved is entered after ON.

Dependency: Refer to: p2230

p2235[0...n] BI: Technology controller motorized potentiometer raise setpoint / Tec_ctrl mop raise

VECTOR_G (Tech_ctrl)

Can be changed: T	**Calculated:** -	**Access level:** 3
Data type: Unsigned32 / Binary	**Dynamic index:** CDS, p0170	**Func. diagram:** 7954
P-Group: Commands	**Units group:** -	**Unit selection:** -
Not for motor type: -	**Scaling:** -	**Expert list:** 1
Min	**Max**	**Factory setting**
-	-	0

Description: Sets the signal source to continually increase the setpoint for the motorized potentiometer of the technology controller.

The setpoint change (CO: r2250) depends on the set ramp-up time (p2247) and the duration of the signal that is present (BI: p2235).

Dependency: Refer to: p2236

© Siemens AG 2012 All Rights Reserved

p2236[0...n] BI: Technology controller motorized potentiometer lower setpoint / Tec_ctrl mop lower

VECTOR_G (Tech_ctrl)

Can be changed: T	**Calculated:** -	**Access level:** 3
Data type: Unsigned32 / Binary	**Dynamic index:** CDS, p0170	**Func. diagram:** 7954
P-Group: Commands	**Units group:** -	**Unit selection:** -
Not for motor type: -	**Scaling:** -	**Expert list:** 1
Min	**Max**	**Factory setting**
-	-	0

Description: Sets the signal source to continually reduce the setpoint for the motorized potentiometer of the technology controller.

The setpoint change (CO: r2250) depends on the set ramp-down time (p2248) and the duration of the signal that is present (BI: p2236).

Dependency: Refer to: p2235

p2237[0...n] Technology controller motorized potentiometer maximum value / Tec_ctrl mop max

VECTOR_G (Tech_ctrl)

Can be changed: U, T	**Calculated:** -	**Access level:** 2
Data type: FloatingPoint32	**Dynamic index:** DDS, p0180	**Func. diagram:** 7954
P-Group: Technology	**Units group:** 9_1	**Unit selection:** p0595
Not for motor type: -	**Scaling:** -	**Expert list:** 1
Min	**Max**	**Factory setting**
-200.00 [%]	200.00 [%]	100.00 [%]

Description: Sets the maximum value for the motorized potentiometer of the technology controller.

Dependency: Refer to: p2238

p2238[0...n] Technology controller motorized potentiometer minimum value / Tec_ctrl mop min

VECTOR_G (Tech_ctrl)

Can be changed: U, T	**Calculated:** -	**Access level:** 2
Data type: FloatingPoint32	**Dynamic index:** DDS, p0180	**Func. diagram:** 7954
P-Group: Technology	**Units group:** 9_1	**Unit selection:** p0595
Not for motor type: -	**Scaling:** -	**Expert list:** 1
Min	**Max**	**Factory setting**
-200.00 [%]	200.00 [%]	-100.00 [%]

Description: Sets the minimum value for the motorized potentiometer of the technology controller.

Dependency: Refer to: p2237

p2240[0...n] Technology controller motorized potentiometer starting value / Tec_ctrl mop start

VECTOR_G (Tech_ctrl)

Can be changed: U, T	**Calculated:** -	**Access level:** 2
Data type: FloatingPoint32	**Dynamic index:** DDS, p0180	**Func. diagram:** 7954
P-Group: Technology	**Units group:** 9_1	**Unit selection:** p0595
Not for motor type: -	**Scaling:** -	**Expert list:** 1
Min	**Max**	**Factory setting**
-200.00 [%]	200.00 [%]	0.00 [%]

Description: Sets the starting value for the motorized potentiometer of the technology controller.

For p2230.0 = 0, this setpoint is entered after ON.

Dependency: Refer to: p2230

© Siemens AG 2012 All Rights Reserved

r2245 CO: Technology controller mot. potentiometer setpoint before RFG / Tec_ctr mop befRFG

VECTOR_G (Tech_ctrl)

Can be changed: -	**Calculated:** -	**Access level:** 2
Data type: FloatingPoint32	**Dynamic index:** -	**Func. diagram:** 7954
P-Group: Technology	**Units group:** 9_1	**Unit selection:** p0595
Not for motor type: -	**Scaling:** PERCENT	**Expert list:** 1
Min	**Max**	**Factory setting**
- [%]	- [%]	- [%]

Description: Sets the effective setpoint in front of the internal motorized potentiometer ramp-function generator of the technology controller.

Dependency: Refer to: r2250

p2247[0...n] Technology controller motorized potentiometer ramp-up time / Tec_ctr mop t_r-up

VECTOR_G (Tech_ctrl)

Can be changed: U, T	**Calculated:** -	**Access level:** 2
Data type: FloatingPoint32	**Dynamic index:** DDS, p0180	**Func. diagram:** 7954
P-Group: Technology	**Units group:** -	**Unit selection:** -
Not for motor type: -	**Scaling:** -	**Expert list:** 1
Min	**Max**	**Factory setting**
0.0 [s]	1000.0 [s]	10.0 [s]

Description: Sets the ramp-up time for the internal ramp-function generator for the motorized potentiometer of the technology controller.

Dependency: Refer to: p2248

Note: The time is referred to 100 %.

When the initial rounding-off is activated (p2230.2 = 1) the ramp-up is correspondingly extended.

p2248[0...n] Technology controller motorized potentiometer ramp-down time / Tec_ctrMop t_rdown

VECTOR_G (Tech_ctrl)

Can be changed: U, T	**Calculated:** -	**Access level:** 2
Data type: FloatingPoint32	**Dynamic index:** DDS, p0180	**Func. diagram:** 7954
P-Group: Technology	**Units group:** -	**Unit selection:** -
Not for motor type: -	**Scaling:** -	**Expert list:** 1
Min	**Max**	**Factory setting**
0.0 [s]	1000.0 [s]	10.0 [s]

Description: Sets the ramp-down time for the internal ramp-function generator for the motorized potentiometer of the technology controller.

Dependency: Refer to: p2247

Note: The time is referred to 100 %.

When the initial rounding-off is activated (p2230.2 = 1) the ramp-down is correspondingly extended.

r2250 CO: Technology controller motorized potentiometer setpoint after RFG / Tec_ctr mop aftRFG

VECTOR_G (Tech_ctrl)

Can be changed: -	**Calculated:** -	**Access level:** 2
Data type: FloatingPoint32	**Dynamic index:** -	**Func. diagram:** 7954
P-Group: Technology	**Units group:** 9_1	**Unit selection:** p0595
Not for motor type: -	**Scaling:** PERCENT	**Expert list:** 1
Min	**Max**	**Factory setting**
- [%]	- [%]	- [%]

Description: Displays the effective setpoint after the internal ramp-function generator for the motorized potentiometer of the technology controller.

Dependency: Refer to: r2245

© Siemens AG 2012 All Rights Reserved

p2252 Technology controller configuration / Tec_ctrl config

VECTOR_G (Tech_ctrl)

Can be changed: U, T	**Calculated:** -	**Access level:** 3
Data type: Unsigned16	**Dynamic index:** -	**Func. diagram:** -
P-Group: Modulation	**Units group:** -	**Unit selection:** -
Not for motor type: -	**Scaling:** -	**Expert list:** 1
Min	**Max**	**Factory setting**
-	-	0111 bin

Description: Sets the configuration of the technology controller.

Bit field:

Bit	Signal name	1 signal	0 signal	FP
00	Ramp-up/down time independent of set-point sign	Yes	No	-
01	Integrator independent of Kp	Yes	No	-
02	Output signal without ramp active	Yes	No	-
03	Act val lim	Yes	No	-

Dependency: Refer to: p2257, p2258, p2267, p2268, p2280, p2285

Note: Re bit 00 = 0:

The ramp-down time (p2258) switches to the ramp-up time (p2257) when the sign for the output signal r2260 changes. When the sign changes, the output signal is kept at zero for one arithmetic cycle.

Re bit 00 = 1:

When r2260 exhibits a positive gradient, the ramp-up time (p2257) is active; when it exhibits a negative gradient, the ramp-down time (p2258) is active. The sign for r2260 does not have any effect on the ramp time.

Re bit 01 = 0:

The integration time of the PID controller is evaluated with the gain factor Kp (p2280) (p2285 = integral time).

Re bit 01 = 1:

The integration time of the PID controller is independent of the gain factor (p2285 = integration time) if p2280 > 0.

Re bit 02 = 0:

When the PID controller is de-activated via p2200, the output signal r2294 is reduced to zero via the ramp-down time p2293.

Re bit 02 = 1:

When the PID controller is de-activated via p2200, the output signal r2294 is set directly to zero.

Re bit 03 = 0:

The actual values are not limited by p2267 and p2268.

Re bit 03 = 1:

The actual values are limited by p2267 and p2268.

p2253[0...n] CI: Technology controller setpoint 1 / Tec_ctrl setp 1

VECTOR_G (Tech_ctrl)

Can be changed: U, T	**Calculated:** -	**Access level:** 2
Data type: Unsigned32 / FloatingPoint32	**Dynamic index:** CDS, p0170	**Func. diagram:** 7958
P-Group: Technology	**Units group:** -	**Unit selection:** -
Not for motor type: -	**Scaling:** PERCENT	**Expert list:** 1
Min	**Max**	**Factory setting**
-	-	0

Description: Sets the signal source for the setpoint 1 of the technology controller.

Dependency: Refer to: p2254, p2255

p2254[0...n] CI: Technology controller setpoint 2 / Tec_ctrl setp 2

VECTOR_G (Tech_ctrl)

Can be changed: U, T	**Calculated:** -	**Access level:** 3
Data type: Unsigned32 / FloatingPoint32	**Dynamic index:** CDS, p0170	**Func. diagram:** 7958
P-Group: Technology	**Units group:** -	**Unit selection:** -
Not for motor type: -	**Scaling:** PERCENT	**Expert list:** 1
Min	**Max**	**Factory setting**
-	-	0

Description: Sets the signal source for the setpoint 2 of the technology controller.

© Siemens AG 2012 All Rights Reserved

Dependency: Refer to: p2253, p2256

p2255 Technology controller setpoint 1 scaling / Tec_ctrl set1 scal

VECTOR_G (Tech_ctrl)

Can be changed: U, T	**Calculated:** -	**Access level:** 3
Data type: FloatingPoint32	**Dynamic index:** -	**Func. diagram:** 7958
P-Group: Technology	**Units group:** -	**Unit selection:** -
Not for motor type: -	**Scaling:** -	**Expert list:** 1
Min	**Max**	**Factory setting**
0.00 [%]	100.00 [%]	100.00 [%]

Description: Sets the scaling for the setpoint 1 of the technology controller.

Dependency: Refer to: p2253

p2256 Technology controller setpoint 2 scaling / Tec_ctrl set2 scal

VECTOR_G (Tech_ctrl)

Can be changed: U, T	**Calculated:** -	**Access level:** 3
Data type: FloatingPoint32	**Dynamic index:** -	**Func. diagram:** 7958
P-Group: Technology	**Units group:** -	**Unit selection:** -
Not for motor type: -	**Scaling:** -	**Expert list:** 1
Min	**Max**	**Factory setting**
0.00 [%]	100.00 [%]	100.00 [%]

Description: Sets the scaling for the setpoint 2 of the technology controller.

Dependency: Refer to: p2254

p2257 Technology controller, ramp-up time / Tec_ctrl t_ramp-up

VECTOR_G (Tech_ctrl)

Can be changed: U, T	**Calculated:** -	**Access level:** 2
Data type: FloatingPoint32	**Dynamic index:** -	**Func. diagram:** 7958
P-Group: Technology	**Units group:** -	**Unit selection:** -
Not for motor type: -	**Scaling:** -	**Expert list:** 1
Min	**Max**	**Factory setting**
0.00 [s]	650.00 [s]	1.00 [s]

Description: Sets the ramp-up time of the technology controller.

Dependency: Refer to: p2252, p2258

Note: The ramp-up time is referred to 100 %.

p2258 Technology controller ramp-down time / Tec_ctrl t_ramp-dn

VECTOR_G (Tech_ctrl)

Can be changed: U, T	**Calculated:** -	**Access level:** 2
Data type: FloatingPoint32	**Dynamic index:** -	**Func. diagram:** 7958
P-Group: Technology	**Units group:** -	**Unit selection:** -
Not for motor type: -	**Scaling:** -	**Expert list:** 1
Min	**Max**	**Factory setting**
0.00 [s]	650.00 [s]	1.00 [s]

Description: Sets the ramp-down time of the technology controller.

Dependency: Refer to: p2252, p2257

Note: The ramp-down time is referred to 100 %.

© Siemens AG 2012 All Rights Reserved

r2260 CO: Technology controller setpoint after ramp-function generator / Tec_ctr set aftRFG

VECTOR_G (Tech_ctrl)

Can be changed: -	**Calculated:** -	**Access level:** 2
Data type: FloatingPoint32	**Dynamic index:** -	**Func. diagram:** 7958
P-Group: Technology	**Units group:** 9_1	**Unit selection:** p0595
Not for motor type: -	**Scaling:** PERCENT	**Expert list:** 1
Min	**Max**	**Factory setting**
- [%]	- [%]	- [%]

Description: Sets the setpoint after the ramp-function generator of the technology controller.

p2261 Technology controller setpoint filter time constant / Tec_ctrl set T

VECTOR_G (Tech_ctrl)

Can be changed: U, T	**Calculated:** -	**Access level:** 3
Data type: FloatingPoint32	**Dynamic index:** -	**Func. diagram:** 7958
P-Group: Technology	**Units group:** -	**Unit selection:** -
Not for motor type: -	**Scaling:** -	**Expert list:** 1
Min	**Max**	**Factory setting**
0.000 [s]	60.000 [s]	0.000 [s]

Description: Sets the time constant for the setpoint filter (PT1) of the technology controller.

r2262 CO: Technology controller setpoint after filter / Tec_ctr set aftFlt

VECTOR_G (Tech_ctrl)

Can be changed: -	**Calculated:** -	**Access level:** 3
Data type: FloatingPoint32	**Dynamic index:** -	**Func. diagram:** 7958
P-Group: Technology	**Units group:** 9_1	**Unit selection:** p0595
Not for motor type: -	**Scaling:** PERCENT	**Expert list:** 1
Min	**Max**	**Factory setting**
- [%]	- [%]	- [%]

Description: Displays the smoothed setpoint after the setpoint filter (PT1) of the technology controller.

p2263 Technology controller type / Tec_ctrl type

VECTOR_G (Tech_ctrl)

Can be changed: T	**Calculated:** -	**Access level:** 3
Data type: Integer16	**Dynamic index:** -	**Func. diagram:** 7958
P-Group: Technology	**Units group:** -	**Unit selection:** -
Not for motor type: -	**Scaling:** -	**Expert list:** 1
Min	**Max**	**Factory setting**
0	1	0

Description: Sets the technology controller type.

Value:
0: D component in the actual value signal
1: D component in the fault signal

p2264[0...n] CI: Technology controller actual value / Tec_ctrl act val

VECTOR_G (Tech_ctrl)

Can be changed: U, T	**Calculated:** -	**Access level:** 2
Data type: Unsigned32 / FloatingPoint32	**Dynamic index:** CDS, p0170	**Func. diagram:** 7958
P-Group: Technology	**Units group:** -	**Unit selection:** -
Not for motor type: -	**Scaling:** PERCENT	**Expert list:** 1
Min	**Max**	**Factory setting**
-	-	0

Description: Sets the signal source for the actual value of the technology controller.

© Siemens AG 2012 All Rights Reserved

p2265 Technology controller actual value filter time constant / Tec_ctrl act T

VECTOR_G (Tech_ctrl)

Can be changed: U, T	**Calculated:** -	**Access level:** 2
Data type: FloatingPoint32	**Dynamic index:** -	**Func. diagram:** 7958
P-Group: Technology	**Units group:** -	**Unit selection:** -
Not for motor type: -	**Scaling:** -	**Expert list:** 1
Min	**Max**	**Factory setting**
0.000 [s]	60.000 [s]	0.000 [s]

Description: Sets the time constant for the actual value filter (PT1) of the technology controller.

r2266 CO: Technology controller actual value after filter / Tec_ctr act aftFlt

VECTOR_G (Tech_ctrl)

Can be changed: -	**Calculated:** -	**Access level:** 2
Data type: FloatingPoint32	**Dynamic index:** -	**Func. diagram:** 7958
P-Group: Technology	**Units group:** 9_1	**Unit selection:** p0595
Not for motor type: -	**Scaling:** PERCENT	**Expert list:** 1
Min	**Max**	**Factory setting**
- [%]	- [%]	- [%]

Description: Displays the smoothed actual value after the filter (PT1) of the technology controller

p2267 Technology controller upper limit actual value / Tec_ctrl u_lim act

VECTOR_G (Tech_ctrl)

Can be changed: U, T	**Calculated:** -	**Access level:** 3
Data type: FloatingPoint32	**Dynamic index:** -	**Func. diagram:** 7958
P-Group: Technology	**Units group:** 9_1	**Unit selection:** p0595
Not for motor type: -	**Scaling:** PERCENT	**Expert list:** 1
Min	**Max**	**Factory setting**
-10000.00 [%]	10000.00 [%]	200.00 [%]

Description: Sets the upper limit for the actual value signal of the technology controller.

Dependency: Refer to: p2252, p2264, p2265, p2271
Refer to: F07426

Notice: If the actual value exceeds this upper limit, this results in fault F07426.

Note: Limiting only active for p2252.3 = 1.

p2268 Technology controller lower limit actual value / Tec_ctrl l_lim act

VECTOR_G (Tech_ctrl)

Can be changed: U, T	**Calculated:** -	**Access level:** 3
Data type: FloatingPoint32	**Dynamic index:** -	**Func. diagram:** 7958
P-Group: Technology	**Units group:** 9_1	**Unit selection:** p0595
Not for motor type: -	**Scaling:** PERCENT	**Expert list:** 1
Min	**Max**	**Factory setting**
-10000.00 [%]	10000.00 [%]	-200.00 [%]

Description: Sets the lower limit for the actual value signal of the technology controller.

Dependency: Refer to: p2252, p2264, p2265, p2271
Refer to: F07426

Notice: If the actual value falls below this lower limit, this results in fault F07426.

Note: Limiting only active for p2252.3 = 1.

© Siemens AG 2012 All Rights Reserved

p2269 Technology controller gain actual value / Tech_ctrl gain act

VECTOR_G (Tech_ctrl)

Can be changed: U, T	**Calculated:** -	**Access level:** 3
Data type: FloatingPoint32	**Dynamic index:** -	**Func. diagram:** 7958
P-Group: Technology	**Units group:** -	**Unit selection:** -
Not for motor type: -	**Scaling:** -	**Expert list:** 1
Min	**Max**	**Factory setting**
0.00 [%]	500.00 [%]	100.00 [%]

Description: Sets the scaling factor for the actual value of the technology controller.

Dependency: Refer to: p2264, p2265, p2267, p2268, p2271

Note: For 100%, the actual value is not changed.

p2270 Technology controller actual value function / Tec_ctr ActVal fct

VECTOR_G (Tech_ctrl)

Can be changed: U, T	**Calculated:** -	**Access level:** 3
Data type: Integer16	**Dynamic index:** -	**Func. diagram:** 7958
P-Group: Technology	**Units group:** -	**Unit selection:** -
Not for motor type: -	**Scaling:** -	**Expert list:** 1
Min	**Max**	**Factory setting**
0	3	0

Description: Setting to use an arithmetic function for the actual value signal of the technology controller.

Value:
0: No function
1: Root function (root from x)
2: Square function (x * x)
3: Cube function (x * x * x)

Dependency: Refer to: p2264, p2265, p2267, p2268, p2269, p2271

p2271 Technology controller actual value inversion (sensor type) / Tech_ctrl act inv

VECTOR_G (Tech_ctrl)

Can be changed: T	**Calculated:** -	**Access level:** 3
Data type: Integer16	**Dynamic index:** -	**Func. diagram:** -
P-Group: Technology	**Units group:** -	**Unit selection:** -
Not for motor type: -	**Scaling:** -	**Expert list:** 1
Min	**Max**	**Factory setting**
0	1	0

Description: Setting to invert the actual value signal of the technology controller.
The inversion depends on the sensor type for the actual value signal.

Value:
0: No inversion
1: Inversion actual value signal

Caution: If the actual value inversion is incorrectly selected, then the closed-loop control with the technology controller can become unstable and can oscillate!

Note: The correct setting can be determined as follows:
- inhibit the technology controller (p2200 = 0).
- increase the motor speed and in so doing, measure the actual value signal of the technology controller.
--> If the actual value increases as the motor speed increases, then p2271 should be set to 0 (no inversion).
--> If the actual value decreases as the motor speed increases, then p2271 should be set to 1 (the actual value signal is inverted).

© Siemens AG 2012 All Rights Reserved

r2272 CO: Technology controller actual value scaled / Tech_ctrl act scal

VECTOR_G (Tech_ctrl)

Can be changed: -	**Calculated:** -	**Access level:** 2
Data type: FloatingPoint32	**Dynamic index:** -	**Func. diagram:** 7958
P-Group: Technology	**Units group:** 9_1	**Unit selection:** p0595
Not for motor type: -	**Scaling:** PERCENT	**Expert list:** 1
Min	**Max**	**Factory setting**
- [%]	- [%]	- [%]

Description: Displays the scaled actual value signal of the technology controller.

Dependency: Refer to: p2264, p2265, r2266, p2267, p2268, p2269, p2270, p2271

r2273 CO: Technology controller error / Tec_ctrl error

VECTOR_G (Tech_ctrl)

Can be changed: -	**Calculated:** -	**Access level:** 2
Data type: FloatingPoint32	**Dynamic index:** -	**Func. diagram:** 7958
P-Group: Technology	**Units group:** 9_1	**Unit selection:** p0595
Not for motor type: -	**Scaling:** PERCENT	**Expert list:** 1
Min	**Max**	**Factory setting**
- [%]	- [%]	- [%]

Description: Displays the error (system deviation) between the setpoint and actual value of the technology controller.

Dependency: Refer to: p2263

p2274 Technology controller differentiation, time constant / Tec_ctrl D comp T

VECTOR_G (Tech_ctrl)

Can be changed: U, T	**Calculated:** -	**Access level:** 2
Data type: FloatingPoint32	**Dynamic index:** -	**Func. diagram:** 7958
P-Group: Technology	**Units group:** -	**Unit selection:** -
Not for motor type: -	**Scaling:** -	**Expert list:** 1
Min	**Max**	**Factory setting**
0.000 [s]	60.000 [s]	0.000 [s]

Description: Sets the time constant for the differentiation (D component) of the technology controller.

Note: p2274 = 0: Differentiation is disabled.

p2280 Technology controller proportional gain / Tec_ctrl Kp

VECTOR_G (Tech_ctrl)

Can be changed: U, T	**Calculated:** -	**Access level:** 2
Data type: FloatingPoint32	**Dynamic index:** -	**Func. diagram:** 7958
P-Group: Technology	**Units group:** -	**Unit selection:** -
Not for motor type: -	**Scaling:** -	**Expert list:** 1
Min	**Max**	**Factory setting**
0.000	1000.000	1.000

Description: Sets the proportional gain (P component) of the technology controller.

Dependency: Refer to: p2252

Note: p2280 = 0: The proportional gain is disabled.

p2285 Technology controller integral time / Tec_ctrl Tn

VECTOR_G (Tech_ctrl)

Can be changed: U, T	**Calculated:** -	**Access level:** 2
Data type: FloatingPoint32	**Dynamic index:** -	**Func. diagram:** 7958
P-Group: Technology	**Units group:** -	**Unit selection:** -
Not for motor type: -	**Scaling:** -	**Expert list:** 1
Min	**Max**	**Factory setting**
0.000 [s]	60.000 [s]	0.000 [s]

Description: Sets the integral time (I component, integrating time constant) of the technology controller.

Dependency: Refer to: p2252

Note: p2285 = 0: The integral time is disabled.

© Siemens AG 2012 All Rights Reserved

p2286[0...n] BI: Hold technology controller integrator / Tec_ctr integ stop

VECTOR_G (Tech_ctrl)

Can be changed: T	**Calculated:** -	**Access level:** 3
Data type: Unsigned32 / Binary	**Dynamic index:** CDS, p0170	**Func. diagram:** 7958
P-Group: Technology	**Units group:** -	**Unit selection:** -
Not for motor type: -	**Scaling:** -	**Expert list:** 1
Min	**Max**	**Factory setting**
-	-	0

Description: Sets the signal source to hold the integrator for the technology controller.

p2289[0...n] CI: Technology controller pre-control signal / Tec_ctrl prectrl

VECTOR_G (Tech_ctrl)

Can be changed: U, T	**Calculated:** -	**Access level:** 2
Data type: Unsigned32 / FloatingPoint32	**Dynamic index:** CDS, p0170	**Func. diagram:** 7958
P-Group: Technology	**Units group:** -	**Unit selection:** -
Not for motor type: -	**Scaling:** PERCENT	**Expert list:** 1
Min	**Max**	**Factory setting**
-	-	0

Description: Sets the signal source for the pre-control signal of the technology controller.

p2291 CO: Technology controller maximum limiting / Tec_ctrl max_lim

VECTOR_G (Tech_ctrl)

Can be changed: U, T	**Calculated:** -	**Access level:** 2
Data type: FloatingPoint32	**Dynamic index:** -	**Func. diagram:** 7958
P-Group: Technology	**Units group:** -	**Unit selection:** -
Not for motor type: -	**Scaling:** PERCENT	**Expert list:** 1
Min	**Max**	**Factory setting**
-200.00 [%]	200.00 [%]	100.00 [%]

Description: Sets the maximum limit of the technology controller.

Dependency: Refer to: p2292

Caution: The maximum limit must always be greater than the minimum limit (p2291 > p2292).

p2292 CO: Technology controller minimum limiting / Tec_ctrl min_lim

VECTOR_G (Tech_ctrl)

Can be changed: U, T	**Calculated:** -	**Access level:** 2
Data type: FloatingPoint32	**Dynamic index:** -	**Func. diagram:** 7958
P-Group: Technology	**Units group:** -	**Unit selection:** -
Not for motor type: -	**Scaling:** PERCENT	**Expert list:** 1
Min	**Max**	**Factory setting**
-200.00 [%]	200.00 [%]	0.00 [%]

Description: Sets the minimum limit of the technology controller.

Dependency: Refer to: p2291

Caution: The maximum limit must always be greater than the minimum limit (p2291 > p2292).

© Siemens AG 2012 All Rights Reserved

p2293 Technology controller ramp-up/ramp-down time / Tec_ctr ramp up/dn

VECTOR_G (Tech_ctrl)

Can be changed: U, T	**Calculated:** -	**Access level:** 3
Data type: FloatingPoint32	**Dynamic index:** -	**Func. diagram:** 7958
P-Group: Technology	**Units group:** -	**Unit selection:** -
Not for motor type: -	**Scaling:** -	**Expert list:** 1
Min	**Max**	**Factory setting**
0.00 [s]	100.00 [s]	1.00 [s]

Description: Sets the ramping time for the output signal of the technology controller.

Dependency: Refer to: p2291, p2292

Note: The time refers to the set maximum and minimum limits (p2291, p2292).

r2294 CO: Technology controller output signal / Tec_ctrl outp_sig

VECTOR_G (Tech_ctrl)

Can be changed: -	**Calculated:** -	**Access level:** 2
Data type: FloatingPoint32	**Dynamic index:** -	**Func. diagram:** 7958
P-Group: Technology	**Units group:** -	**Unit selection:** -
Not for motor type: -	**Scaling:** PERCENT	**Expert list:** 1
Min	**Max**	**Factory setting**
- [%]	- [%]	- [%]

Description: Displays the output signal of the technology controller.

Dependency: Refer to: p2295

p2295 CO: Technology controller output scaling / Tec_ctrl outp scal

VECTOR_G (Tech_ctrl)

Can be changed: U, T	**Calculated:** -	**Access level:** 3
Data type: FloatingPoint32	**Dynamic index:** -	**Func. diagram:** 7958
P-Group: Technology	**Units group:** -	**Unit selection:** -
Not for motor type: -	**Scaling:** PERCENT	**Expert list:** 1
Min	**Max**	**Factory setting**
-100.00 [%]	100.00 [%]	100.00 [%]

Description: Sets the scaling for the output signal of the technology controller.

p2296[0...n] CI: Technology controller output scaling / Tec_ctrl outp scal

VECTOR_G (Tech_ctrl)

Can be changed: U, T	**Calculated:** -	**Access level:** 2
Data type: Unsigned32 / FloatingPoint32	**Dynamic index:** CDS, p0170	**Func. diagram:** 7958
P-Group: Technology	**Units group:** -	**Unit selection:** -
Not for motor type: -	**Scaling:** PERCENT	**Expert list:** 1
Min	**Max**	**Factory setting**
-	-	2295[0]

Description: Sets the signal source for the scaling value of the technology controller.

Dependency: Refer to: p2295

p2297[0...n] CI: Technology controller maximum limit signal source / Tec_ctrMaxLimS_src

VECTOR_G (Tech_ctrl)

Can be changed: U, T	**Calculated:** -	**Access level:** 2
Data type: Unsigned32 / FloatingPoint32	**Dynamic index:** CDS, p0170	**Func. diagram:** 7958
P-Group: Technology	**Units group:** -	**Unit selection:** -
Not for motor type: -	**Scaling:** PERCENT	**Expert list:** 1
Min	**Max**	**Factory setting**
-	-	2291[0]

Description: Sets the signal source for the maximum limiting of the technology controller.

Dependency: Refer to: p2291

© Siemens AG 2012 All Rights Reserved

p2298[0...n] CI: Technology controller minimum limit signal source / Tec_ctrl min_l s_s

VECTOR_G (Tech_ctrl)

Can be changed: U, T	**Calculated:** -	**Access level:** 2
Data type: Unsigned32 / FloatingPoint32	**Dynamic index:** CDS, p0170	**Func. diagram:** 7958
P-Group: Technology	**Units group:** -	**Unit selection:** -
Not for motor type: -	**Scaling:** PERCENT	**Expert list:** 1
Min	**Max**	**Factory setting**
-	-	2292[0]

Description: Sets the signal source for the minimum limiting of the technology controller.

Dependency: Refer to: p2292

p2299[0...n] CI: Technology controller limit offset / Tech_ctrl lim offs

VECTOR_G (Tech_ctrl)

Can be changed: U, T	**Calculated:** -	**Access level:** 2
Data type: Unsigned32 / FloatingPoint32	**Dynamic index:** CDS, p0170	**Func. diagram:** 7958
P-Group: Technology	**Units group:** -	**Unit selection:** -
Not for motor type: -	**Scaling:** PERCENT	**Expert list:** 1
Min	**Max**	**Factory setting**
-	-	0

Description: Sets the signal source for the offset of the output limiting of the technology controller.

p2306 Technology controller fault signal inversion / Tec_ctrl fault inv

VECTOR_G (Tech_ctrl)

Can be changed: T	**Calculated:** -	**Access level:** 3
Data type: Integer16	**Dynamic index:** -	**Func. diagram:** -
P-Group: Technology	**Units group:** -	**Unit selection:** -
Not for motor type: -	**Scaling:** -	**Expert list:** 1
Min	**Max**	**Factory setting**
0	1	0

Description: Setting to invert the fault signal of the technology controller.
The setting depends on the type of control loop.

Value:
0: No inversion
1: Inversion

Caution: If the actual value inversion is incorrectly selected, then the closed-loop control with the technology controller can become unstable and can oscillate!

Note: The correct setting can be determined as follows:
- inhibit the technology controller (p2200 = 0).
- increase the motor speed and in so doing, measure the actual value signal (of the technology controller).
- if the actual value increases with increasing motor speed, then the inversion should be switched out.
- if the actual value decreases with increasing motor speed, then the inversion should be set.

If value = 0:
The drive reduces the output speed when the actual value rises (e.g. for heating fans, intake pump, compressor).
If value = 1:
The drive increases the output speed when the actual value increases (e.g. for cooling fans, discharge pumps).

r2349.0...11 CO/BO: Technology controller status word / Tec_ctrl status

VECTOR_G (Tech_ctrl)

Can be changed: -	**Calculated:** -	**Access level:** 3
Data type: Unsigned32	**Dynamic index:** -	**Func. diagram:** 7958
P-Group: Technology	**Units group:** -	**Unit selection:** -
Not for motor type: -	**Scaling:** -	**Expert list:** 1
Min	**Max**	**Factory setting**
-	-	-

Description: Displays the status word of the technology controller.

© Siemens AG 2012 All Rights Reserved

Bit field:	Bit	Signal name	1 signal	0 signal	FP
	00	Technology controller de-activated	Yes	No	-
	01	Technology controller limited	Yes	No	-
	02	Technology controller, motorized potentiometer limited max.	Yes	No	-
	03	Technology controller, motorized potentiometer limited min.	Yes	No	-
	08	Technology controller actual value at the minimum	Yes	No	-
	09	Technology controller actual value at the maximum	Yes	No	-
	10	Technology controller output at the minimum	Yes	No	-
	11	Technology controller output at the maximum	Yes	No	-

p2369 BI: Closed-loop cascade control, control word / Csc_ctrl STW

VECTOR_G (Tech_ctrl)

Can be changed: U, T	**Calculated:** -	**Access level:** 3
Data type: Unsigned32 / Binary	**Dynamic index:** -	**Func. diagram:** -
P-Group: -	**Units group:** -	**Unit selection:** -
Not for motor type: -	**Scaling:** -	**Expert list:** 1
Min	**Max**	**Factory setting**
-	-	0

Description: Sets the signal source for the selection of the "Switch-in motor" function.

When the function is selected, monitoring of the switches is de-activated with the "bypass" function. This means that the power unit can be connected to other motors via an external control without switch monitoring responding.

r2700 CO: Reference frequency / f_ref

B_INF

Can be changed: -	**Calculated:** -	**Access level:** 2
Data type: FloatingPoint32	**Dynamic index:** -	**Func. diagram:** -
P-Group: -	**Units group:** -	**Unit selection:** -
Not for motor type: -	**Scaling:** -	**Expert list:** 1
Min	**Max**	**Factory setting**
-	-	-

Description: Display and connector output of the actual reference quantity for the frequency (p2000).

All frequencies specified as relative value are referred to this reference quantity. The reference quantity corresponds to 100% or 4000 hex (word) or 4000 0000 hex (double word).

This parameter has the unit Hz.

Dependency: Refer to: p2000

Note: This BICO parameter provides the numerical value of the reference quantity p2000 as a connector output for interconnection with Drive Control Chart (DCC). The numerical value can be adopted unchanged from this connector output in DCC. This BICO parameter is not suitable for interconnecting for cyclic communication.

r2700 CO: Reference speed/reference frequency / n_ref/f_ref

ENC, VECTOR_G

Can be changed: -	**Calculated:** -	**Access level:** 2
Data type: FloatingPoint32	**Dynamic index:** -	**Func. diagram:** -
P-Group: -	**Units group:** -	**Unit selection:** -
Not for motor type: -	**Scaling:** -	**Expert list:** 1
Min	**Max**	**Factory setting**
-	-	-

Description: Display and connector output for the reference quantity for speed and frequency (p2000).

All speeds or frequencies specified as relative value are referred to this reference quantity.

The reference quantity corresponds to 100% or 4000 hex (word) or 4000 0000 hex (double word).

The following applies: Reference frequency (in Hz) = reference speed (in rpm) / 60

This parameter has the unit rpm.

© Siemens AG 2012 All Rights Reserved

Dependency: Refer to: p2000

Note: This BICO parameter provides the numerical value of the reference quantity p2000 as a connector output for interconnection with Drive Control Chart (DCC). The numerical value can be adopted unchanged from this connector output in DCC. This BICO parameter is not suitable for interconnecting for cyclic communication.

r2700 CO: Reference velocity/reference frequency actual / v_ref/f_ref act

ENC (Lin_enc)

Can be changed: -	**Calculated:** -	**Access level:** 2
Data type: FloatingPoint32	**Dynamic index:** -	**Func. diagram:** -
P-Group: -	**Units group:** -	**Unit selection:** -
Not for motor type: -	**Scaling:** -	**Expert list:** 1
Min	**Max**	**Factory setting**
-	-	-

Description: Display and connector output for the actual reference quantity for velocity and frequency.
All velocities or frequencies specified as relative value are referred to this reference quantity.
The reference quantity corresponds to 100% or 4000 hex (word) or 4000 0000 hex (double word).
The following applies: Reference frequency (in Hz) = reference velocity (in m/min) / 60

Dependency: Refer to: p2000

Note: This BICO parameter provides the numerical value of the reference quantity p2000 as a connector output for interconnection with Drive Control Chart (DCC). The numerical value can be adopted unchanged from this connector output in DCC. This BICO parameter is not suitable for interconnecting for cyclic communication.

r2701 CO: Reference voltage / Reference voltage

B_INF, VECTOR_G

Can be changed: -	**Calculated:** -	**Access level:** 3
Data type: FloatingPoint32	**Dynamic index:** -	**Func. diagram:** -
P-Group: -	**Units group:** -	**Unit selection:** -
Not for motor type: -	**Scaling:** -	**Expert list:** 1
Min	**Max**	**Factory setting**
-	-	-

Description: Connector output of the reference quantity for voltages p2001.
All voltages specified as relative value are referred to this reference quantity.
The reference quantity corresponds to 100% or 4000 hex (word) or 4000 0000 hex (double word).
This parameter has the unit Vrms.

Dependency: Refer to: p2001

Note: This BICO parameter provides the numerical value of the reference quantity p2001 as a connector output for interconnection with Drive Control Chart (DCC). The numerical value can be adopted unchanged from this connector output in DCC. This BICO parameter is not suitable for interconnecting for cyclic communication.

r2702 CO: Reference current / Reference current

B_INF, VECTOR_G

Can be changed: -	**Calculated:** -	**Access level:** 3
Data type: FloatingPoint32	**Dynamic index:** -	**Func. diagram:** -
P-Group: -	**Units group:** -	**Unit selection:** -
Not for motor type: -	**Scaling:** -	**Expert list:** 1
Min	**Max**	**Factory setting**
-	-	-

Description: Connector output of the reference quantity for currents p2002.
All currents specified as relative value are referred to this reference quantity.
The reference quantity corresponds to 100% or 4000 hex (word) or 4000 0000 hex (double word).
This parameter has the unit Arms.

Dependency: Refer to: p2002

Note: This BICO parameter provides the numerical value of the reference quantity p2002 as a connector output for interconnection with Drive Control Chart (DCC). The numerical value can be adopted unchanged from this connector output in DCC. This BICO parameter is not suitable for interconnecting for cyclic communication.

© Siemens AG 2012 All Rights Reserved

r2703 CO: Reference torque / Reference torque

VECTOR_G

Can be changed: -	**Calculated:** -	**Access level:** 3
Data type: FloatingPoint32	**Dynamic index:** -	**Func. diagram:** -
P-Group: -	**Units group:** -	**Unit selection:** -
Not for motor type: -	**Scaling:** -	**Expert list:** 1
Min	**Max**	**Factory setting**
-	-	-

Description: Connector output of the reference quantity p2003 for torque (r0108.12 = 0) or force (r0108.12 = 1).

All torques specified as relative values (r0108.12 = 0) or forces (r0108.12 = 1) are referred to this reference quantity.

The reference quantity corresponds to 100% or 4000 hex (word) or 4000 0000 hex (double word).

The unit of this parameter is the same as the unit selected for p2003.

Dependency: p0505, r0108.12

Refer to: p2003

Note: This BICO parameter provides the numerical value of the reference quantity p2003 in the currently selected unit as a connector output for interconnection with Drive Control Chart (DCC). The numerical value can be adopted unchanged from this connector output in DCC. This BICO parameter is not suitable for interconnecting for cyclic communication.

r2704 CO: Reference power / Reference power

B_INF, VECTOR_G

Can be changed: -	**Calculated:** -	**Access level:** 3
Data type: FloatingPoint32	**Dynamic index:** -	**Func. diagram:** -
P-Group: -	**Units group:** -	**Unit selection:** -
Not for motor type: -	**Scaling:** -	**Expert list:** 1
Min	**Max**	**Factory setting**
-	-	-

Description: Connector output of the reference quantity for powers p2004.

All power ratings specified as relative value are referred to this reference quantity.

The reference quantity corresponds to 100% or 4000 hex (word) or 4000 0000 hex (double word).

The unit of this parameter is the same as the unit selected for p2004.

Dependency: This value is calculated as voltage x current for the infeed and as torque x speed for closed-loop controls.

Refer to: r2004

Note: This BICO parameter provides the numerical value of the reference quantity p2004 in the currently selected unit as a connector output for interconnection with Drive Control Chart (DCC). The numerical value can be adopted unchanged from this connector output in DCC. This BICO parameter is not suitable for interconnecting for cyclic communication.

The reference power is calculated as follows:

- 2 * Pi * reference speed / 60 * reference torque (motor)
- reference voltage * reference current * root(3) (infeed)

r2705 CO: Reference angle / Reference angle

B_INF, VECTOR_G

Can be changed: -	**Calculated:** -	**Access level:** 3
Data type: FloatingPoint32	**Dynamic index:** -	**Func. diagram:** -
P-Group: -	**Units group:** -	**Unit selection:** -
Not for motor type: -	**Scaling:** -	**Expert list:** 1
Min	**Max**	**Factory setting**
-	-	-

Description: Connector output of the reference quantity for angles p2005.

All angles specified as relative value are referred to this reference quantity.

The reference quantity corresponds to 100% or 4000 hex (word) or 4000 0000 hex (double word).

This parameter has the unit degree.

Dependency: Refer to: p2005

© Siemens AG 2012 All Rights Reserved

Note: This BICO parameter provides the numerical value of the reference quantity p2005 as a connector output for interconnection with Drive Control Chart (DCC). The numerical value can be adopted unchanged from this connector output in DCC. This BICO parameter is not suitable for interconnecting for cyclic communication.

r2706 CO: Reference temp / Reference temp

B_INF, TM150, TM31, VECTOR_G

Can be changed: -	**Calculated:** -	**Access level:** 3
Data type: FloatingPoint32	**Dynamic index:** -	**Func. diagram:** -
P-Group: -	**Units group:** -	**Unit selection:** -
Not for motor type: -	**Scaling:** -	**Expert list:** 1
Min	**Max**	**Factory setting**
-	-	-

Description: Connector output of the reference quantity for temperatures.
All temperatures specified as relative value are referred to this reference quantity.
The reference quantity corresponds to 100% or 4000 hex (word) or 4000 0000 hex (double word).
This parameter has the unit degree Celsius.

Note: This BICO parameter provides the numerical value of the reference quantity for the temperature as a connector output for interconnection with Drive Control Chart (DCC). The numerical value can be adopted unchanged from this connector output in DCC. This BICO parameter is not suitable for interconnecting for cyclic communication.

r2707 CO: Reference acceleration / Ref accel

VECTOR_G

Can be changed: -	**Calculated:** -	**Access level:** 3
Data type: FloatingPoint32	**Dynamic index:** -	**Func. diagram:** -
P-Group: -	**Units group:** -	**Unit selection:** -
Not for motor type: -	**Scaling:** -	**Expert list:** 1
Min	**Max**	**Factory setting**
-	-	-

Description: Connector output of the reference quantity for accelerations p2007.
All acceleration rates specified as relative value are referred to this reference quantity.
The reference quantity corresponds to 100% or 4000 hex (word) or 4000 0000 hex (double word).
The unit of this parameter is the same as the unit selected for p2007.

Dependency: r0108.12, p0505
Refer to: p2007

Note: This BICO parameter provides the numerical value of the reference quantity p2007 as a connector output for interconnection with Drive Control Chart (DCC). The numerical value in the currently selected unit can be adopted unchanged from this connector output in DCC. This BICO parameter is not suitable for interconnecting for cyclic communication.

p2720[0...n] Load gear configuration / Load gear config

VECTOR_G

Can be changed: C2(1, 4)	**Calculated:** -	**Access level:** 1
Data type: Unsigned32	**Dynamic index:** DDS, p0180	**Func. diagram:** -
P-Group: Encoder	**Units group:** -	**Unit selection:** -
Not for motor type: -	**Scaling:** -	**Expert list:** 1
Min	**Max**	**Factory setting**
-	-	0000 bin

Description: Sets the configuration for position tracking of a load gear.

Bit field:

Bit	Signal name	1 signal	0 signal	FP
00	Load gear, activate position tracking	Yes	No	-
01	Axis type	Linear axis	Rotary axis	-
02	Load gear, reset position	Yes	No	-

Note: For the following events, the non-volatile, saved position values are automatically reset:
- when an encoder replacement has been identified.
- when changing the configuration of the Encoder Data Set (EDS).
- when adjusting the absolute encoder again

© Siemens AG 2012 All Rights Reserved

p2721[0...n] Load gear, rotary absolute encoder, revolutions, virtual / Abs rot rev

VECTOR_G

Can be changed: C2(1, 4)	**Calculated:** -	**Access level:** 1
Data type: Unsigned32	**Dynamic index:** DDS, p0180	**Func. diagram:** -
P-Group: Encoder	**Units group:** -	**Unit selection:** -
Not for motor type: -	**Scaling:** -	**Expert list:** 1
Min	**Max**	**Factory setting**
0	4194303	0

Description: Sets the number of rotations that can be resolved for a rotary absolute encoder with activated position tracking of the load gear.

Dependency: This parameter is only of significance for an absolute encoder (p0404.1 = 1) with activated position tracking of the load gear (p2720.0 = 1).

Note: The resolution that is set must be able to be represented using r2723.

For rotary axes/modulo axes, the following applies:

This parameter is pre-set with p0421 and can be changed.

For linear axes, the following applies:

This parameter is pre-assigned with p0421, expanded by 6 bits for multiturn information (maximum number of overflows) and cannot be changed.

p2722[0...n] Load gear, position tracking tolerance window / Pos track tol

VECTOR_G

Can be changed: C2(1, 4)	**Calculated:** -	**Access level:** 3
Data type: FloatingPoint32	**Dynamic index:** DDS, p0180	**Func. diagram:** -
P-Group: Encoder	**Units group:** -	**Unit selection:** -
Not for motor type: -	**Scaling:** -	**Expert list:** 1
Min	**Max**	**Factory setting**
0.00	4294967300.00	0.00

Description: Sets a tolerance window for position tracking.

After the system is powered up, the difference between the saved position and the actual position is determined, and depending on this, the following is initiated:

Difference within the tolerance window --> The position is reproduced as a result of the encoder actual value.

Difference outside the tolerance window --> An appropriate message is output.

Dependency: Refer to: F07449

Caution: Rotation, e.g. through a complete encoder range is not detected.

Note: The value is entered in integer (complete) encoder pulses.

For p2720.0 = 1, the value is automatically pre-assigned quarter of the encoder range.

Example:

Quarter of the encoder range = (p0408 * p0421) / 4

It is possible that the tolerance window may not be able to be precisely set due to the data type (floating point number with 23 bit mantissa).

r2723[0...n] CO: Load gear absolute value / Load gear abs_val

VECTOR_G

Can be changed: -	**Calculated:** -	**Access level:** 1
Data type: Unsigned32	**Dynamic index:** DDS, p0180	**Func. diagram:** 4010, 4704
P-Group: Encoder	**Units group:** -	**Unit selection:** -
Not for motor type: -	**Scaling:** -	**Expert list:** 1
Min	**Max**	**Factory setting**
-	-	-

Description: Displays the absolute value after the load gear.

Notice: The encoder position actual value must be requested using the encoder control word Gn_STW.13.

Note: The increments are displayed in the format the same as r0483.

© Siemens AG 2012 All Rights Reserved

r2724[0...n] CO: Load gear position difference / Load gear pos diff

VECTOR_G

Can be changed: -	**Calculated:** -	**Access level:** 1
Data type: Integer32	**Dynamic index:** DDS, p0180	**Func. diagram:** -
P-Group: Encoder	**Units group:** -	**Unit selection:** -
Not for motor type: -	**Scaling:** -	**Expert list:** 1
Min	**Max**	**Factory setting**
-	-	-

Description: Displays the position difference before the load gear between powering down and powering up.

Note: The increments are displayed in the same format as for r0483/r2723.

If the measuring gear of the motor encoder is not activated, the position difference should be read in encoder increments.

If the measuring gear of the motor encoder is activated, the position difference is converted using the measuring gear factor.

p2810[0...1] BI: AND logic operation inputs / AND inputs

VECTOR_G

Can be changed: T	**Calculated:** -	**Access level:** 2
Data type: Unsigned32 / Binary	**Dynamic index:** -	**Func. diagram:** 2634
P-Group: Functions	**Units group:** -	**Unit selection:** -
Not for motor type: -	**Scaling:** -	**Expert list:** 1
Min	**Max**	**Factory setting**
-	-	0

Description: Sets the signal sources for the inputs of the AND logic operation.

Dependency: Refer to: r2811

Note: [0]: AND logic operation, input 1 --> the result is displayed in r2811.0.

[1]: AND logic operation, input 2 --> the result is displayed in r2811.0.

r2811.0 CO/BO: AND logic operation result / AND result

VECTOR_G

Can be changed: -	**Calculated:** -	**Access level:** 2
Data type: Unsigned32	**Dynamic index:** -	**Func. diagram:** 2634
P-Group: Functions	**Units group:** -	**Unit selection:** -
Not for motor type: -	**Scaling:** -	**Expert list:** 1
Min	**Max**	**Factory setting**
-	-	-

Description: Displays the result of the AND logic operation

Bit field:

Bit	Signal name	1 signal	0 signal	FP
00	AND logic operation result	Yes	No	-

Dependency: Refer to: p2810

p2816[0...1] BI: OR logic operation inputs / OR inputs

VECTOR_G

Can be changed: T	**Calculated:** -	**Access level:** 2
Data type: Unsigned32 / Binary	**Dynamic index:** -	**Func. diagram:** 2634
P-Group: Functions	**Units group:** -	**Unit selection:** -
Not for motor type: -	**Scaling:** -	**Expert list:** 1
Min	**Max**	**Factory setting**
-	-	0

Description: Sets the signal sources for the inputs of the OR logic operation.

Dependency: Refer to: r2817

Note: [0]: OR logic operation, input 1 --> the result is displayed in r2817.0.

[1]: OR logic operation, input 2 --> the result is displayed in r2817.0.

© Siemens AG 2012 All Rights Reserved

r2817.0 CO/BO: OR logic operation result / OR result

VECTOR_G	**Can be changed:** -	**Calculated:** -	**Access level:** 2
	Data type: Unsigned32	**Dynamic index:** -	**Func. diagram:** 2634
	P-Group: Functions	**Units group:** -	**Unit selection:** -
	Not for motor type: -	**Scaling:** -	**Expert list:** 1
	Min	**Max**	**Factory setting**
	-	-	-

Description: Displays the result of the OR logic operation.

Bit field:

Bit	Signal name	1 signal	0 signal	FP
00	OR logic operation result	Yes	No	-

Dependency: Refer to: p2816

p2900[0...n] CO: Fixed value 1 [%] / Fixed value 1 [%]

VECTOR_G	**Can be changed:** U, T	**Calculated:** -	**Access level:** 3
	Data type: FloatingPoint32	**Dynamic index:** DDS, p0180	**Func. diagram:** 1021
	P-Group: Free function blocks	**Units group:** -	**Unit selection:** -
	Not for motor type: -	**Scaling:** PERCENT	**Expert list:** 1
	Min	**Max**	**Factory setting**
	-10000.00 [%]	10000.00 [%]	0.00 [%]

Description: Sets a fixed percentage.

Dependency: Refer to: p2901, p2930

Notice: A BICO interconnection to a parameter that belongs to a drive data set always acts on the effective data set.

Note: The value can be used to interconnect a scaling function (e.g. scaling of the main setpoint)

p2901[0...n] CO: Fixed value 2 [%] / Fixed value 2 [%]

VECTOR_G	**Can be changed:** U, T	**Calculated:** -	**Access level:** 3
	Data type: FloatingPoint32	**Dynamic index:** DDS, p0180	**Func. diagram:** 1021
	P-Group: Free function blocks	**Units group:** -	**Unit selection:** -
	Not for motor type: -	**Scaling:** PERCENT	**Expert list:** 1
	Min	**Max**	**Factory setting**
	-10000.00 [%]	10000.00 [%]	0.00 [%]

Description: Sets a fixed percentage.

Dependency: Refer to: p2900, p2930

Notice: A BICO interconnection to a parameter that belongs to a drive data set always acts on the effective data set.

Note: The value can be used to interconnect a scaling function (e.g. scaling of the supplementary setpoint)

r2902[0...14] CO: Fixed values [%] / Fixed values [%]

VECTOR_G	**Can be changed:** -	**Calculated:** -	**Access level:** 1
	Data type: FloatingPoint32	**Dynamic index:** -	**Func. diagram:** 1021
	P-Group: Free function blocks	**Units group:** -	**Unit selection:** -
	Not for motor type: -	**Scaling:** PERCENT	**Expert list:** 1
	Min	**Max**	**Factory setting**
	- [%]	- [%]	- [%]

Description: Signal sources for frequently used percentage values.

Index:
[0] = Fixed value +0 %
[1] = Fixed value +5 %
[2] = Fixed value +10 %
[3] = Fixed value +20 %
[4] = Fixed value +50 %
[5] = Fixed value +100 %
[6] = Fixed value +150 %
[7] = Fixed value +200 %
[8] = Fixed value -5 %

© Siemens AG 2012 All Rights Reserved

[9] = Fixed value -10 %
[10] = Fixed value -20 %
[11] = Fixed value -50 %
[12] = Fixed value -100 %
[13] = Fixed value -150 %
[14] = Fixed value -200 %

Dependency: Refer to: p2900, p2901, p2930

Note: The signal sources can, for example, be used to interconnect scalings.

p2930[0...n] CO: Fixed value M [Nm] / Fixed value M [Nm]

VECTOR_G

Can be changed: U, T	**Calculated:** -	**Access level:** 3
Data type: FloatingPoint32	**Dynamic index:** DDS, p0180	**Func. diagram:** 1021
P-Group: Free function blocks	**Units group:** 7_1	**Unit selection:** p0505
Not for motor type: REL	**Scaling:** p2003	**Expert list:** 1
Min	**Max**	**Factory setting**
-100000.00 [Nm]	100000.00 [Nm]	0.00 [Nm]

Description: Sets a fixed value for torque.

Dependency: Refer to: p2900, p2901

Notice: A BICO interconnection to a parameter that belongs to a drive data set always acts on the effective data set.

Note: The value can, for example, be used to interconnect a supplementary torque.

p3100 RTC time stamp mode / RTC t_stamp mode

CU_G130_DP, CU_G130_PN, CU_G150_DP, CU_G150_PN

Can be changed: U, T	**Calculated:** -	**Access level:** 3
Data type: Unsigned16	**Dynamic index:** -	**Func. diagram:** -
P-Group: -	**Units group:** -	**Unit selection:** -
Not for motor type: -	**Scaling:** -	**Expert list:** 1
Min	**Max**	**Factory setting**
0	1	0

Description: Sets the mode for the time stamp
p3100 = 0: Time stamp, operating hours
p3100 = 1: Time stamp, UTC format

Note: RTC: Real-time clock
UTC: Universal Time Coordinates
The UTC time started, according to the definition on 01.01.1970 at 00:00:00 and is output in days and milliseconds.

p3101[0...1] RTC set UTC time / RTC set UTC

CU_G130_DP, CU_G130_PN, CU_G150_DP, CU_G150_PN

Can be changed: U, T	**Calculated:** -	**Access level:** 3
Data type: Unsigned32	**Dynamic index:** -	**Func. diagram:** -
P-Group: -	**Units group:** -	**Unit selection:** -
Not for motor type: -	**Scaling:** -	**Expert list:** 0
Min	**Max**	**Factory setting**
0	4294967295	0

Description: Setting the UTC time.
This means that the drive system is synchronized to the time specified by the time master.
To start p3101[1] must be written to followed by p3101[0]. After writing to p3101[0], the UTC time is accepted.
p3101[0]: Milliseconds
p3101[1]: Days

© Siemens AG 2012 All Rights Reserved

r3102[0...1] RTC read UTC time / RTC read UTC

CU_G130_DP, CU_G130_PN, CU_G150_DP, CU_G150_PN	**Can be changed:** -	**Calculated:** -	**Access level:** 3
	Data type: Unsigned32	**Dynamic index:** -	**Func. diagram:** -
	P-Group: -	**Units group:** -	**Unit selection:** -
	Not for motor type: -	**Scaling:** -	**Expert list:** 1
	Min	**Max**	**Factory setting**
	-	-	-

Description: Displays the actual UTC time in the drive system.
p3102[0]: Milliseconds
p3102[1]: Days

p3103 RTC synchronization source / RTC sync_source

CU_G130_DP, CU_G130_PN, CU_G150_DP, CU_G150_PN	**Can be changed:** U, T	**Calculated:** -	**Access level:** 3
	Data type: Integer16	**Dynamic index:** -	**Func. diagram:** -
	P-Group: -	**Units group:** -	**Unit selection:** -
	Not for motor type: -	**Scaling:** -	**Expert list:** 1
	Min	**Max**	**Factory setting**
	0	3	0

Description: Sets the synchronization source/technique.

Value:
0: PROFIBUS
1: PROFINET
2: PPI
3: PROFINET PTP

p3104 BI: RTC real time synchronization PING / RTC PING

CU_G130_DP, CU_G130_PN, CU_G150_DP, CU_G150_PN	**Can be changed:** U, T	**Calculated:** -	**Access level:** 3
	Data type: Unsigned32 / Binary	**Dynamic index:** -	**Func. diagram:** -
	P-Group: -	**Units group:** -	**Unit selection:** -
	Not for motor type: -	**Scaling:** -	**Expert list:** 1
	Min	**Max**	**Factory setting**
	-	-	0

Description: Sets the signal source for the PING event to set the UTC time.

Notice: The parameter may be protected as a result of p0922 or p2079 and cannot be changed.

r3107[0...3] RTC synchronizing time / RTC t_sync

CU_G130_DP, CU_G130_PN, CU_G150_DP, CU_G150_PN	**Can be changed:** -	**Calculated:** -	**Access level:** 3
	Data type: Unsigned32	**Dynamic index:** -	**Func. diagram:** -
	P-Group: -	**Units group:** -	**Unit selection:** -
	Not for motor type: -	**Scaling:** -	**Expert list:** 1
	Min	**Max**	**Factory setting**
	-	-	-

Description: Displays the last synchronizing event in the drive system.
3107[0, 1]: synchronizing event after synchronization
r3107[0]: milliseconds
r3107[1]: days
3107[2, 3]: synchronizing event before synchronization
r3107[2]: milliseconds
r3107[3]: days

© Siemens AG 2012 All Rights Reserved

r3108[0...1] RTC last synchronization deviation / RTC sync_dev

CU_G130_DP, CU_G130_PN, CU_G150_DP, CU_G150_PN	**Can be changed:** -	**Calculated:** -	**Access level:** 3
	Data type: Unsigned32	**Dynamic index:** -	**Func. diagram:** -
	P-Group: -	**Units group:** -	**Unit selection:** -
	Not for motor type: -	**Scaling:** -	**Expert list:** 1
	Min	**Max**	**Factory setting**
	-	-	-

Description: Displays the absolute value of the last synchronization deviation that was determined.
r3108[0]: Milliseconds
r3108[1]: Days

p3109 RTC real time synchronization, tolerance window / RTC sync tol

CU_G130_DP, CU_G130_PN, CU_G150_DP, CU_G150_PN	**Can be changed:** U, T	**Calculated:** -	**Access level:** 3
	Data type: Unsigned16	**Dynamic index:** -	**Func. diagram:** -
	P-Group: -	**Units group:** -	**Unit selection:** -
	Not for motor type: -	**Scaling:** -	**Expert list:** 1
	Min	**Max**	**Factory setting**
	0 [ms]	1000 [ms]	100 [ms]

Description: Sets the tolerance window for time synchronization.
When this tolerance window is exceeded, an appropriate alarm is output.

Dependency: Refer to: A01099

p3110 External fault 3, power-up delay / Ext fault 3 t_on

All objects	**Can be changed:** U, T	**Calculated:** -	**Access level:** 3
	Data type: Unsigned16	**Dynamic index:** -	**Func. diagram:** 2546
	P-Group: Messages	**Units group:** -	**Unit selection:** -
	Not for motor type: -	**Scaling:** -	**Expert list:** 1
	Min	**Max**	**Factory setting**
	0 [ms]	1000 [ms]	0 [ms]

Description: Sets the delay time for external fault 3.

Dependency: Refer to: p2108, p3111, p3112
Refer to: F07862

p3111[0...n] BI: External fault 3, enable / Ext fault 3 enab

B_INF, VECTOR_G	**Can be changed:** U, T	**Calculated:** -	**Access level:** 3
	Data type: Unsigned32 / Binary	**Dynamic index:** CDS, p0170	**Func. diagram:** -
	P-Group: Messages	**Units group:** -	**Unit selection:** -
	Not for motor type: -	**Scaling:** -	**Expert list:** 1
	Min	**Max**	**Factory setting**
	-	-	1

Description: Sets the signal source for the enable signal of external fault 3.
External fault 3 is initiated by the following AND logic operation:
- BI: p2108 negated
- BI: p3111
- BI: p3112 negated

Dependency: Refer to: p2108, p3110, p3112
Refer to: F07862

© Siemens AG 2012 All Rights Reserved

p3111 BI: External fault 3, enable / Ext fault 3 enab

CU_G130_DP, CU_G130_PN, CU_G150_DP, CU_G150_PN, ENC, HUB, TB30, TM150, TM31, TM54F_MA, TM54F_SL

Can be changed: U, T | **Calculated:** - | **Access level:** 3
Data type: Unsigned32 / Binary | **Dynamic index:** - | **Func. diagram:** 2546
P-Group: Messages | **Units group:** - | **Unit selection:** -
Not for motor type: - | **Scaling:** - | **Expert list:** 1

Min	Max	Factory setting
-	-	1

Description:
Sets the signal source for the enable signal of external fault 3.
External fault 3 is initiated by the following AND logic operation:
- BI: p2108 negated
- BI: p3111
- BI: p3112 negated

Dependency:
Refer to: p2108, p3110, p3112
Refer to: F07862

p3112[0...n] BI: External fault 3 enable negated / Ext flt 3 enab neg

B_INF, VECTOR_G

Can be changed: U, T | **Calculated:** - | **Access level:** 3
Data type: Unsigned32 / Binary | **Dynamic index:** CDS, p0170 | **Func. diagram:** -
P-Group: Messages | **Units group:** - | **Unit selection:** -
Not for motor type: - | **Scaling:** - | **Expert list:** 1

Min	Max	Factory setting
-	-	0

Description:
Sets the signal source for the negated enable signal of external fault 3.
External fault 3 is initiated by the following AND logic operation:
- BI: p2108 negated
- BI: p3111
- BI: p3112 negated

Dependency:
Refer to: p2108, p3110, p3111
Refer to: F07862

p3112 BI: External fault 3 enable negated / Ext flt 3 enab neg

CU_G130_DP, CU_G130_PN, CU_G150_DP, CU_G150_PN, ENC, HUB, TB30, TM150, TM31, TM54F_MA, TM54F_SL

Can be changed: U, T | **Calculated:** - | **Access level:** 3
Data type: Unsigned32 / Binary | **Dynamic index:** - | **Func. diagram:** 2546
P-Group: Messages | **Units group:** - | **Unit selection:** -
Not for motor type: - | **Scaling:** - | **Expert list:** 1

Min	Max	Factory setting
-	-	0

Description:
Sets the signal source for the negated enable signal of external fault 3.
External fault 3 is initiated by the following AND logic operation:
- BI: p2108 negated
- BI: p3111
- BI: p3112 negated

Dependency:
Refer to: p2108, p3110, p3111
Refer to: F07862

© Siemens AG 2012 All Rights Reserved

r3113.0...15 CO/BO: NAMUR message bit bar / NAMUR bit bar

All objects

Can be changed: -	**Calculated:** -	**Access level:** 3
Data type: Unsigned16	**Dynamic index:** -	**Func. diagram:** -
P-Group: Messages	**Units group:** -	**Unit selection:** -
Not for motor type: -	**Scaling:** -	**Expert list:** 1
Min	**Max**	**Factory setting**
-	-	-

Description: Displays the status of NAMUR signal bit bar.

The faults or alarms are assigned to the appropriate signaling/message classes and influence a specific message bit.

Bit field:

Bit	Signal name	1 signal	0 signal	FP
00	Fault drive converter data electronics / software error	Yes	No	-
01	Network fault	Yes	No	-
02	DC link overvoltage	Yes	No	-
03	Fault drive converter power electronics	Yes	No	-
04	Drive converter overtemperature	Yes	No	-
05	Ground fault	Yes	No	-
06	Motor overload	Yes	No	-
07	Bus error	Yes	No	-
08	External safety-relevant shutdown	Yes	No	-
09	Mot encoder fault	Yes	No	-
10	Error communication internal	Yes	No	-
11	Fault infeed	Yes	No	-
15	Other faults	Yes	No	-

r3114.9...11 CO/BO: Messages status word global / Msg ZSW global

CU_G130_DP, CU_G130_PN, CU_G150_DP, CU_G150_PN

Can be changed: -	**Calculated:** -	**Access level:** 2
Data type: Unsigned16	**Dynamic index:** -	**Func. diagram:** -
P-Group: Displays, signals	**Units group:** -	**Unit selection:** -
Not for motor type: -	**Scaling:** -	**Expert list:** 1
Min	**Max**	**Factory setting**
-	-	-

Description: Displays the global status word for messages.

The appropriate bit is set if at least one message is present at the drive objects.

Bit field:

Bit	Signal name	1 signal	0 signal	FP
09	Group alarm present	Yes	No	8065
10	Group fault present	Yes	No	8060
11	Safety group message present	Yes	No	-

Note: The status bits are displayed with delay.

r3115[0...63] Fault drive object initiating / F DO initiating

All objects

Can be changed: -	**Calculated:** -	**Access level:** 3
Data type: Integer32	**Dynamic index:** -	**Func. diagram:** 1750, 8060
P-Group: Messages	**Units group:** -	**Unit selection:** -
Not for motor type: -	**Scaling:** -	**Expert list:** 1
Min	**Max**	**Factory setting**
-	-	-

Description: Displays the drive object number of the initiating drive object for this fault as integer number.

Value = 63:

The fault was initiated by the drive object itself.

Dependency: Refer to: r0945, r0947, r0948, r0949, r2109, r2130, r2133, r2136, r3120, r3122

Note: The buffer parameters are cyclically updated in the background (refer to status signal in r2139).

The structure of the fault buffer and the assignment of the indices is shown in r0945.

© Siemens AG 2012 All Rights Reserved

p3116 BI: Acknowledgement automatically suppressed / Ackn suppress

CU_G130_DP, CU_G130_PN, CU_G150_DP, CU_G150_PN

Can be changed: U, T	**Calculated:** -	**Access level:** 3
Data type: Unsigned32 / Binary	**Dynamic index:** -	**Func. diagram:** 8060
P-Group: Messages	**Units group:** -	**Unit selection:** -
Not for motor type: -	**Scaling:** -	**Expert list:** 1
Min	**Max**	**Factory setting**
-	-	0

Description: Sets the signal source for the automatic acknowledgement on the device drive object.

BI: p3116 = 0 signal

Faults present are automatically acknowledged on the device drive object. Local device faults are forwarded to the first active drive object.

BI: p3116 = 1 signal

Faults present are not automatically acknowledged on the device drive object. Local device faults are not forwarded.

Dependency: Refer to: p2102, p2103, p2104, p2105, p3981

Note: When selecting a standard telegram, the BICO interconnection for control signal STW1.10 (master control by PLC) is automatically established.

p3117 Change safety message type / Ch. SI mess type

CU_G130_DP, CU_G130_PN, CU_G150_DP, CU_G150_PN

Can be changed: C1(1)	**Calculated:** -	**Access level:** 3
Data type: Unsigned32	**Dynamic index:** -	**Func. diagram:** -
P-Group: Messages	**Units group:** -	**Unit selection:** -
Not for motor type: -	**Scaling:** -	**Expert list:** 1
Min	**Max**	**Factory setting**
0	1	0

Description: Sets the re-parameterization of all safety messages for faults and alarms.

The relevant message type during changeover is selected by the firmware.

0: Safety messages are not re-parameterized

1: Safety messages are re-parameterized

Note: A change only becomes effective after a POWER ON.

r3120[0...63] Component number fault / Comp_num flt

All objects

Can be changed: -	**Calculated:** -	**Access level:** 3
Data type: Unsigned32	**Dynamic index:** -	**Func. diagram:** 8060
P-Group: Messages	**Units group:** -	**Unit selection:** -
Not for motor type: -	**Scaling:** -	**Expert list:** 1
Min	**Max**	**Factory setting**
-	-	-

Description: Displays the component number of the fault which has occurred.

Dependency: Refer to: r0945, r0947, r0948, r0949, r2109, r2130, r2133, r2136, r3122

Note: Value = 0: Assignment to a component not possible.

The buffer parameters are cyclically updated in the background (refer to status signal in r2139).

The structure of the fault buffer and the assignment of the indices is shown in r0945.

r3121[0...63] Component number alarm / Comp_num alarm

All objects

Can be changed: -	**Calculated:** -	**Access level:** 3
Data type: Unsigned32	**Dynamic index:** -	**Func. diagram:** 8065
P-Group: Messages	**Units group:** -	**Unit selection:** -
Not for motor type: -	**Scaling:** -	**Expert list:** 1
Min	**Max**	**Factory setting**
-	-	-

Description: Displays the component number of the alarm which has occurred.

© Siemens AG 2012 All Rights Reserved

Dependency: Refer to: r2110, r2122, r2123, r2124, r2125, r2134, r2145, r2146, r3123
Note: Value = 0: Assignment to a component not possible.
The buffer parameters are cyclically updated in the background (refer to status signal in r2139).
The structure of the alarm buffer and the assignment of the indices is shown in r2122.

r3122[0...63] Diagnostic attribute fault / Diag_attr fault

All objects

Can be changed: -	**Calculated:** -	**Access level:** 3
Data type: Unsigned32	**Dynamic index:** -	**Func. diagram:** 8060
P-Group: Messages	**Units group:** -	**Unit selection:** -
Not for motor type: -	**Scaling:** -	**Expert list:** 1
Min	**Max**	**Factory setting**
-	-	-

Description: Displays the diagnostic attribute of the fault which has occurred.

Bit field:

Bit	Signal name	1 signal	0 signal	FP
00	Hardware replacement recommended	Yes	No	-

Dependency: Refer to: r0945, r0947, r0948, r0949, r2109, r2130, r2133, r2136, r3120
Note: The buffer parameters are cyclically updated in the background (refer to status signal in r2139).
The structure of the fault buffer and the assignment of the indices is shown in r0945.

r3123[0...63] Diagnostic attribute alarm / Diag_attr alarm

All objects

Can be changed: -	**Calculated:** -	**Access level:** 3
Data type: Unsigned32	**Dynamic index:** -	**Func. diagram:** 8065
P-Group: Messages	**Units group:** -	**Unit selection:** -
Not for motor type: -	**Scaling:** -	**Expert list:** 1
Min	**Max**	**Factory setting**
-	-	-

Description: Displays the diagnostic attribute of the alarm which has occurred.

Bit field:

Bit	Signal name	1 signal	0 signal	FP
00	Hardware replacement recommended	Yes	No	-

Dependency: Refer to: r2110, r2122, r2123, r2124, r2125, r2134, r2145, r2146, r3121
Note: The buffer parameters are cyclically updated in the background (refer to status signal in r2139).
The structure of the alarm buffer and the assignment of the indices is shown in r2122.

r3131 CO: Actual flt value / Actual flt value

All objects

Can be changed: -	**Calculated:** -	**Access level:** 3
Data type: Integer32	**Dynamic index:** -	**Func. diagram:** 8060
P-Group: Messages	**Units group:** -	**Unit selection:** -
Not for motor type: -	**Scaling:** -	**Expert list:** 1
Min	**Max**	**Factory setting**
-	-	-

Description: Displays the fault value of the oldest active fault.
Dependency: Refer to: r2131, r3132

r3132 CO: Actual component number / Act comp_no.

All objects

Can be changed: -	**Calculated:** -	**Access level:** 3
Data type: Integer32	**Dynamic index:** -	**Func. diagram:** 8060
P-Group: Messages	**Units group:** -	**Unit selection:** -
Not for motor type: -	**Scaling:** -	**Expert list:** 1
Min	**Max**	**Factory setting**
-	-	-

Description: Displays the component number of the oldest fault that is still active.
Dependency: Refer to: r2131, r3131

© Siemens AG 2012 All Rights Reserved

p3135 Suppress active fault / Supp act flt

B_INF, VECTOR_G

Can be changed: U, T	**Calculated:** -	**Access level:** 4
Data type: Unsigned32	**Dynamic index:** -	**Func. diagram:** 8060
P-Group: Messages	**Units group:** -	**Unit selection:** -
Not for motor type: -	**Scaling:** -	**Expert list:** 1
Min	**Max**	**Factory setting**
-	-	0000 0000 0000 0000 bin

Description: Sets the suppression of r2139.3 "Fault present" for certain fault responses.

Bit field:

Bit	Signal name	1 signal	0 signal	FP
08	Suppression of fault response ENCODER	ON	OFF	-
10	Suppression of fault response NONE	ON	OFF	-

Dependency: Refer to: p0491, r2139

Note: Depending on the suppression of a fault reaction in this parameter, r2139.1 "Acknowledgement required" is set when at least one fault occurs.

Re bit 08:

The suppression is only effective if p0491 = 1.

p3201[0...n] Excitation current outside the tolerance threshold value / I_exc n Tol thresh

VECTOR_G

Can be changed: U, T	**Calculated:** -	**Access level:** 3
Data type: FloatingPoint32	**Dynamic index:** DDS, p0180	**Func. diagram:** -
P-Group: Messages	**Units group:** -	**Unit selection:** -
Not for motor type: ASM, PEM, REL	**Scaling:** -	**Expert list:** 1
Min	**Max**	**Factory setting**
0.1 [%]	100.0 [%]	10.0 [%]

Description: Sets the threshold value for the "excitation current outside tolerance" message for the excitation current monitoring.

If the absolute value of the difference between the excitation current setpoint and actual value (r1641 - r1626) exceeds the threshold value and the hysteresis is longer than the selected delay time, then fault F07913 is output.

This fault is withdrawn when the threshold voltage is undershot.

Dependency: Refer to: r1626, r1641, p3202, p3203

Refer to: F07913

Note: The monitoring function is only carried out for separately-excited synchronized motors (p0300 = 5).

p3202[0...n] Excitation current outside the tolerance hysteresis / I_exc n Tol hyst

VECTOR_G

Can be changed: U, T	**Calculated:** -	**Access level:** 3
Data type: FloatingPoint32	**Dynamic index:** DDS, p0180	**Func. diagram:** -
P-Group: Messages	**Units group:** -	**Unit selection:** -
Not for motor type: ASM, PEM, REL	**Scaling:** -	**Expert list:** 1
Min	**Max**	**Factory setting**
0.1 [%]	100.0 [%]	10.0 [%]

Description: Sets the hysteresis for the "excitation current outside tolerance" message for the excitation current monitoring.

Dependency: Refer to: p3201, p3203

Refer to: F07913

Note: The monitoring function is only carried out for separately-excited synchronized motors (p0300 = 5).

p3203[0...n] Excitation current outside the tolerance delay time / I_exc n Tol t_del

VECTOR_G

Can be changed: U, T	**Calculated:** -	**Access level:** 3
Data type: FloatingPoint32	**Dynamic index:** DDS, p0180	**Func. diagram:** -
P-Group: Messages	**Units group:** -	**Unit selection:** -
Not for motor type: ASM, PEM, REL	**Scaling:** -	**Expert list:** 1
Min	**Max**	**Factory setting**
0.0 [s]	10.0 [s]	1.0 [s]

Description: Sets the delay time for the "excitation current outside tolerance" message for the excitation current monitoring.

© Siemens AG 2012 All Rights Reserved

Dependency: Refer to: p3201, p3202
Refer to: F07913

Note: The monitoring function is only carried out for separately-excited synchronized motors (p0300 = 5).

p3204[0...n] Flux outside the tolerance threshold value / Flux n tol thresh

VECTOR_G

Can be changed: U, T	**Calculated:** -	**Access level:** 3
Data type: FloatingPoint32	**Dynamic index:** DDS, p0180	**Func. diagram:** -
P-Group: Messages	**Units group:** -	**Unit selection:** -
Not for motor type: ASM, PEM, REL	**Scaling:** -	**Expert list:** 1
Min	**Max**	**Factory setting**
0.1 [%]	100.0 [%]	10.0 [%]

Description: Sets the threshold value for the "flux outside the tolerance" message for the flux monitoring.
If the absolute value of the difference between the flux setpoint and actual value (r0083 - r0084) falls below the threshold value with hysteresis longer than the selected delay time, then fault F07914 is output.
This fault is withdrawn when the threshold voltage is undershot.

Dependency: Refer to: r0083, r0084, p3205, p3206
Refer to: F07914

Note: The monitoring function is only carried out for separately-excited synchronized motors (p0300 = 5).
The flux monitoring is only active after magnetizing (r0056.4 = 1).

p3205[0...n] Flux outside the tolerance hysteresis / Flux n tol hyst

VECTOR_G

Can be changed: U, T	**Calculated:** -	**Access level:** 3
Data type: FloatingPoint32	**Dynamic index:** DDS, p0180	**Func. diagram:** -
P-Group: Messages	**Units group:** -	**Unit selection:** -
Not for motor type: ASM, PEM, REL	**Scaling:** -	**Expert list:** 1
Min	**Max**	**Factory setting**
0.1 [%]	50.0 [%]	10.0 [%]

Description: Sets the hysteresis for the "flux outside tolerance" message for the flux monitoring.

Dependency: Refer to: p3204, p3206
Refer to: F07914

Note: The monitoring function is only carried out for separately-excited synchronized motors (p0300 = 5).
The flux monitoring is only active after magnetizing (r0056.4 = 1).

p3206[0...n] Flux outside tolerance delay time / Flux n tol t_del

VECTOR_G

Can be changed: U, T	**Calculated:** -	**Access level:** 3
Data type: FloatingPoint32	**Dynamic index:** DDS, p0180	**Func. diagram:** -
P-Group: Messages	**Units group:** -	**Unit selection:** -
Not for motor type: ASM, PEM, REL	**Scaling:** -	**Expert list:** 1
Min	**Max**	**Factory setting**
0.0 [s]	10.0 [s]	5.0 [s]

Description: Sets the delay time for the "flux outside tolerance" message for the flux monitoring.

Dependency: Refer to: p3204, p3205
Refer to: F07914

Note: The monitoring function is only carried out for separately-excited synchronized motors (p0300 = 5).
The flux monitoring is only active after magnetizing (r0056.4 = 1).

© Siemens AG 2012 All Rights Reserved

p3207[0...n] Zero current signal threshold value / I_0_sig thresh

VECTOR_G	**Can be changed:** U, T	**Calculated:** CALC_MOD_LIM_REF	**Access level:** 3
	Data type: FloatingPoint32	**Dynamic index:** DDS, p0180	**Func. diagram:** -
	P-Group: Messages	**Units group:** 6_2	**Unit selection:** p0505
	Not for motor type: ASM, PEM, REL	**Scaling:** -	**Expert list:** 1
	Min 0.01 [Arms]	**Max** 10000.00 [Arms]	**Factory setting** 1.00 [Arms]

Description: Sets the threshold value for the zero current signal for the zero current monitoring.
If the absolute current falls below the threshold value then r2199.6 is set to 1 after the delay time has expired. The bit is reset if the threshold value and the hysteresis are exceeded again.

Dependency: Refer to: r2199, p3208, p3209

Note: The monitoring function is only carried out for separately-excited synchronized motors (p0300 = 5).
The monitoring is only carried out for speeds less than the speed threshold value in p2161 (r2199.0 = 1).

p3208[0...n] Zero current signal hysteresis / I_0_sig hyst

VECTOR_G	**Can be changed:** U, T	**Calculated:** CALC_MOD_LIM_REF	**Access level:** 3
	Data type: FloatingPoint32	**Dynamic index:** DDS, p0180	**Func. diagram:** -
	P-Group: Messages	**Units group:** 6_2	**Unit selection:** p0505
	Not for motor type: ASM, PEM, REL	**Scaling:** -	**Expert list:** 1
	Min 0.01 [Arms]	**Max** 10000.00 [Arms]	**Factory setting** 1.00 [Arms]

Description: Sets the hysteresis for the zero current signal for the zero current monitoring.

Dependency: Refer to: p3207, p3209

Note: The monitoring function is only carried out for separately-excited synchronized motors (p0300 = 5).
The monitoring is only carried out for speeds less than the speed threshold value in p2161 (r2199.0 = 1).

p3209[0...n] Zero current signal delay time / I_0_sig t_del

VECTOR_G	**Can be changed:** U, T	**Calculated:** -	**Access level:** 3
	Data type: FloatingPoint32	**Dynamic index:** DDS, p0180	**Func. diagram:** -
	P-Group: Messages	**Units group:** -	**Unit selection:** -
	Not for motor type: ASM, PEM, REL	**Scaling:** -	**Expert list:** 1
	Min 0.00 [s]	**Max** 10.00 [s]	**Factory setting** 0.02 [s]

Description: Sets the delay time for the zero current signal for the zero current monitoring.

Dependency: Refer to: p3207, p3208

Note: The monitoring function is only carried out for separately-excited synchronized motors (p0300 = 5).
The monitoring is only carried out for speeds less than the speed threshold in p2161 (r2199.0 = 1).

p3233[0...n] Torque actual value filter, time constant / M_act_filt T

VECTOR_G (Ext msg)	**Can be changed:** U, T	**Calculated:** -	**Access level:** 3
	Data type: FloatingPoint32	**Dynamic index:** DDS, p0180	**Func. diagram:** 8013
	P-Group: Messages	**Units group:** -	**Unit selection:** -
	Not for motor type: -	**Scaling:** -	**Expert list:** 1
	Min 0 [ms]	**Max** 1000000 [ms]	**Factory setting** 0 [ms]

Description: Sets the time constant for the PT1 element to smooth the torque actual value.
The smoothed torque actual value is compared with the threshold values and is only used for messages and signals.

© Siemens AG 2012 All Rights Reserved

p3235 Phase failure signal motor monitoring time / Ph_fail t_monit

VECTOR_G	**Can be changed:** U, T	**Calculated:** -	**Access level:** 4
	Data type: FloatingPoint32	**Dynamic index:** -	**Func. diagram:** -
	P-Group: Messages	**Units group:** -	**Unit selection:** -
	Not for motor type: -	**Scaling:** -	**Expert list:** 1
	Min	**Max**	**Factory setting**
	0 [ms]	2000 [ms]	320 [ms]

Description: Sets the monitoring time for phase failure detection of the motor.

Notice: After the value has been modified, no further parameter modifications can be made and the status is shown in r3996. Modifications can be made again when r3996 = 0.

Note: Monitoring is only effective for blocksize and booksize power units.

For p3235 = 0 the function is deactivated.

For VECTOR, the following applies:

The monitoring is automatically de-activated during the flying restart operation for a motor that is still rotating.

p3236[0...n] Speed threshold 7 / n_thresh val 7

VECTOR_G	**Can be changed:** U, T	**Calculated:** CALC_MOD_LIM_REF	**Access level:** 3
	Data type: FloatingPoint32	**Dynamic index:** DDS, p0180	**Func. diagram:** 8012
	P-Group: Messages	**Units group:** 3_1	**Unit selection:** p0505
	Not for motor type: REL	**Scaling:** -	**Expert list:** 1
	Min	**Max**	**Factory setting**
	0.00 [rpm]	3000.00 [rpm]	100.00 [rpm]

Description: Sets the speed threshold value for the signal "speed deviation model/external" (BO: r2199.7).

Dependency: Refer to: r1443, r2169, r2199, p3237

p3237[0...n] Hysteresis speed 7 / n_hysteresis 7

VECTOR_G	**Can be changed:** U, T	**Calculated:** CALC_MOD_LIM_REF	**Access level:** 3
	Data type: FloatingPoint32	**Dynamic index:** DDS, p0180	**Func. diagram:** 8012
	P-Group: Messages	**Units group:** 3_1	**Unit selection:** p0505
	Not for motor type: -	**Scaling:** -	**Expert list:** 1
	Min	**Max**	**Factory setting**
	0.00 [rpm]	200.00 [rpm]	2.00 [rpm]

Description: Sets the hysteresis speed for the signal "speed deviation model/external" (BO: r2199.7).

Dependency: Refer to: r2199, p3236

p3238[0...n] OFF delay n_act_motor model = n_act external / t_del n_a = n_ext

VECTOR_G	**Can be changed:** U, T	**Calculated:** -	**Access level:** 3
	Data type: FloatingPoint32	**Dynamic index:** DDS, p0180	**Func. diagram:** 8012
	P-Group: Messages	**Units group:** -	**Unit selection:** -
	Not for motor type: REL	**Scaling:** -	**Expert list:** 1
	Min	**Max**	**Factory setting**
	0.0 [s]	100.0 [s]	3.0 [s]

Description: Sets the OFF delay for the signal "speed deviation model/external in tolerance" (BO: r2199.7).

The smoothed actual speed of the motor model r2169 is compared with the speed measured externally r1443 (threshold value p3236).

Dependency: Refer to: p3236, p3237

© Siemens AG 2012 All Rights Reserved

p3320[0...n] Fluid flow machine power point 1 / Fluid_mach P1

VECTOR_G	**Can be changed:** U, T	**Calculated:** -	**Access level:** 2
	Data type: FloatingPoint32	**Dynamic index:** DDS, p0180	**Func. diagram:** -
	P-Group: Displays, signals	**Units group:** -	**Unit selection:** -
	Not for motor type: -	**Scaling:** -	**Expert list:** 1
	Min	**Max**	**Factory setting**
	0.00	100.00	25.00

Description: For the energy-saving display of a fluid-flow machine, a typical flow characteristic P = f(n) with 5 points along the characteristic is required.
This parameter specifies the power (P) of point 1 as a [%].
The characteristic comprises the following value pairs:
Power (P) / speed (n)
p3320 / p3321 --> point 1 (P1 / n1)
p3322 / p3323 --> point 2 (P2 / n2)
p3324 / p3325 --> point 3 (P3 / n3)
p3326 / p3327 --> point 4 (P4 / n4)
p3328 / p3329 --> point 5 (P5 / n5)

Dependency: Refer to: r0041, p3321, p3322, p3323, p3324, p3325, p3326, p3327, p3328, p3329

Note: The reference value for power and speed is the rated power/rated speed.
The energy saved is displayed in r0041.

p3321[0...n] Fluid flow machine speed point 1 / Fluid_mach n1

VECTOR_G	**Can be changed:** U, T	**Calculated:** -	**Access level:** 2
	Data type: FloatingPoint32	**Dynamic index:** DDS, p0180	**Func. diagram:** -
	P-Group: Displays, signals	**Units group:** -	**Unit selection:** -
	Not for motor type: -	**Scaling:** -	**Expert list:** 1
	Min	**Max**	**Factory setting**
	0.00	100.00	0.00

Description: For the energy-saving display of a fluid-flow machine, a typical flow characteristic P = f(n) with 5 points along the characteristic is required.
This parameter specifies the speed (n) of point 1 as a [%].
The characteristic comprises the following value pairs:
Power (P) / speed (n)
p3320 / p3321 --> point 1 (P1 / n1)
p3322 / p3323 --> point 2 (P2 / n2)
p3324 / p3325 --> point 3 (P3 / n3)
p3326 / p3327 --> point 4 (P4 / n4)
p3328 / p3329 --> point 5 (P5 / n5)

Dependency: Refer to: r0041, p3320, p3322, p3323, p3324, p3325, p3326, p3327, p3328, p3329

Note: The reference value for power and speed is the rated power/rated speed.
The energy saved is displayed in r0041.

p3322[0...n] Fluid flow machine power point 2 / Fluid_mach P2

VECTOR_G	**Can be changed:** U, T	**Calculated:** -	**Access level:** 2
	Data type: FloatingPoint32	**Dynamic index:** DDS, p0180	**Func. diagram:** -
	P-Group: Displays, signals	**Units group:** -	**Unit selection:** -
	Not for motor type: -	**Scaling:** -	**Expert list:** 1
	Min	**Max**	**Factory setting**
	0.00	100.00	50.00

Description: For the energy-saving display of a fluid-flow machine, a typical flow characteristic P = f(n) with 5 points along the characteristic is required.
This parameter specifies the power (P) of point 2 as a [%].

© Siemens AG 2012 All Rights Reserved

Dependency: Refer to: r0041, p3320, p3321, p3323, p3324, p3325, p3326, p3327, p3328, p3329

Note: The reference value for power and speed is the rated power/rated speed.
The energy saved is displayed in r0041.

p3323[0...n] Fluid flow machine speed point 2 / Fluid_mach n2

VECTOR_G

Can be changed: U, T	**Calculated:** -	**Access level:** 2
Data type: FloatingPoint32	**Dynamic index:** DDS, p0180	**Func. diagram:** -
P-Group: Displays, signals	**Units group:** -	**Unit selection:** -
Not for motor type: -	**Scaling:** -	**Expert list:** 1
Min	**Max**	**Factory setting**
0.00	100.00	25.00

Description: For the energy-saving display of a fluid-flow machine, a typical flow characteristic P = f(n) with 5 points along the characteristic is required.
This parameter specifies the speed (n) of point 2 as a [%].

Dependency: Refer to: r0041, p3320, p3321, p3322, p3324, p3325, p3326, p3327, p3328, p3329

Note: The reference value for power and speed is the rated power/rated speed.
The energy saved is displayed in r0041.

p3324[0...n] Fluid flow machine power point 3 / Fluid_mach P3

VECTOR_G

Can be changed: U, T	**Calculated:** -	**Access level:** 2
Data type: FloatingPoint32	**Dynamic index:** DDS, p0180	**Func. diagram:** -
P-Group: Displays, signals	**Units group:** -	**Unit selection:** -
Not for motor type: -	**Scaling:** -	**Expert list:** 1
Min	**Max**	**Factory setting**
0.00	100.00	77.00

Description: For the energy-saving display of a fluid-flow machine, a typical flow characteristic P = f(n) with 5 points along the characteristic is required.
This parameter specifies the power (P) of point 3 as a [%].

Dependency: Refer to: r0041, p3320, p3321, p3322, p3323, p3325, p3326, p3327, p3328, p3329

Note: The reference value for power and speed is the rated power/rated speed.
The energy saved is displayed in r0041.

p3325[0...n] Fluid flow machine speed point 3 / Fluid_mach n3

VECTOR_G

Can be changed: U, T	**Calculated:** -	**Access level:** 2
Data type: FloatingPoint32	**Dynamic index:** DDS, p0180	**Func. diagram:** -
P-Group: Displays, signals	**Units group:** -	**Unit selection:** -
Not for motor type: -	**Scaling:** -	**Expert list:** 1
Min	**Max**	**Factory setting**
0.00	100.00	50.00

Description: For the energy-saving display of a fluid-flow machine, a typical flow characteristic P = f(n) with 5 points along the characteristic is required.
This parameter specifies the speed (n) of point 3 as a [%].

Dependency: Refer to: r0041, p3320, p3321, p3322, p3323, p3324, p3326, p3327, p3328, p3329

Note: The reference value for power and speed is the rated power/rated speed.
The energy saved is displayed in r0041.

© Siemens AG 2012 All Rights Reserved

p3326[0...n] Fluid flow machine power point 4 / Fluid_mach P4

VECTOR_G	**Can be changed:** U, T	**Calculated:** -	**Access level:** 2
	Data type: FloatingPoint32	**Dynamic index:** DDS, p0180	**Func. diagram:** -
	P-Group: Displays, signals	**Units group:** -	**Unit selection:** -
	Not for motor type: -	**Scaling:** -	**Expert list:** 1
	Min	**Max**	**Factory setting**
	0.00	100.00	92.00

Description: For the energy-saving display of a fluid-flow machine, a typical flow characteristic P = f(n) with 5 points along the characteristic is required.
This parameter specifies the power (P) of point 4 as a [%].

Dependency: Refer to: r0041, p3320, p3321, p3322, p3323, p3324, p3325, p3327, p3328, p3329

Note: The reference value for power and speed is the rated power/rated speed.
The energy saved is displayed in r0041.

p3327[0...n] Fluid flow machine speed point 4 / Fluid_mach n4

VECTOR_G	**Can be changed:** U, T	**Calculated:** -	**Access level:** 2
	Data type: FloatingPoint32	**Dynamic index:** DDS, p0180	**Func. diagram:** -
	P-Group: Displays, signals	**Units group:** -	**Unit selection:** -
	Not for motor type: -	**Scaling:** -	**Expert list:** 1
	Min	**Max**	**Factory setting**
	0.00	100.00	75.00

Description: For the energy-saving display of a fluid-flow machine, a typical flow characteristic P = f(n) with 5 points along the characteristic is required.
This parameter specifies the speed (n) of point 4 as a [%].

Dependency: Refer to: r0041, p3320, p3321, p3322, p3323, p3324, p3325, p3326, p3328, p3329

Note: The reference value for power and speed is the rated power/rated speed.
The energy saved is displayed in r0041.

p3328[0...n] Fluid flow machine power point 5 / Fluid_mach P5

VECTOR_G	**Can be changed:** U, T	**Calculated:** -	**Access level:** 2
	Data type: FloatingPoint32	**Dynamic index:** DDS, p0180	**Func. diagram:** -
	P-Group: Displays, signals	**Units group:** -	**Unit selection:** -
	Not for motor type: -	**Scaling:** -	**Expert list:** 1
	Min	**Max**	**Factory setting**
	0.00	100.00	100.00

Description: For the energy-saving display of a fluid-flow machine, a typical flow characteristic P = f(n) with 5 points along the characteristic is required.
This parameter specifies the power (P) of point 5 as a [%].

Dependency: Refer to: r0041, p3320, p3321, p3322, p3323, p3324, p3325, p3326, p3327, p3329

Note: The reference value for power and speed is the rated power/rated speed.
The energy saved is displayed in r0041.

p3329[0...n] Fluid flow machine speed point 5 / Fluid_mach n5

VECTOR_G	**Can be changed:** U, T	**Calculated:** -	**Access level:** 2
	Data type: FloatingPoint32	**Dynamic index:** DDS, p0180	**Func. diagram:** -
	P-Group: Displays, signals	**Units group:** -	**Unit selection:** -
	Not for motor type: -	**Scaling:** -	**Expert list:** 1
	Min	**Max**	**Factory setting**
	0.00	100.00	100.00

Description: For the energy-saving display of a fluid-flow machine, a typical flow characteristic P = f(n) with 5 points along the characteristic is required.
This parameter specifies the speed (n) of point 5 as a [%].

© Siemens AG 2012 All Rights Reserved

Dependency: Refer to: r0041, p3320, p3321, p3322, p3323, p3324, p3325, p3326, p3327, p3328

Note: The reference value for power and speed is the rated power/rated speed.
The energy saved is displayed in r0041.

r3402 Infeed status internal BIC / INF state int

B_INF

Can be changed: -	**Calculated:** -	**Access level:** 2
Data type: Integer16	**Dynamic index:** -	**Func. diagram:** 8932
P-Group: Closed-loop control	**Units group:** -	**Unit selection:** -
Not for motor type: -	**Scaling:** -	**Expert list:** 1
Min	**Max**	**Factory setting**
0	6	-

Description: Displays the internal status of the infeed module.

Value:
0: Initialization
1: Fault
2: No ON command
3: Offset measurement running
4: ON delay active
5: Precharg. running
6: Operation

r3405.7 CO/BO: Infeed status word / Inf ZSW

B_INF

Can be changed: -	**Calculated:** -	**Access level:** 2
Data type: Unsigned16	**Dynamic index:** -	**Func. diagram:** -
P-Group: Closed-loop control	**Units group:** -	**Unit selection:** -
Not for motor type: -	**Scaling:** -	**Expert list:** 1
Min	**Max**	**Factory setting**
-	-	-

Description: Displays the status word of the infeed.

Bit field:

Bit	Signal name	1 signal	0 signal	FP
07	DC link undervoltage alarm threshold undershot	Yes	No	-

r3405.1...8 CO/BO: Status word DC-link control / UDC ZSW

VECTOR_G (Tech_ctrl)

Can be changed: -	**Calculated:** -	**Access level:** 2
Data type: Unsigned16	**Dynamic index:** -	**Func. diagram:** -
P-Group: Closed-loop control	**Units group:** -	**Unit selection:** -
Not for motor type: -	**Scaling:** -	**Expert list:** 1
Min	**Max**	**Factory setting**
-	-	-

Description: Displays the status word for DC-link voltage control.

Bit field:

Bit	Signal name	1 signal	0 signal	FP
01	Vdc-ctrl active	Yes	No	-
08	Vdc controller selected	Yes	No	-

Note: Re bit 01:
DC-link voltage control is disabled and enabled with p3513.
Re bit 08 = 1:
DC-link voltage control is selected using p3513.

© Siemens AG 2012 All Rights Reserved

p3422 DC-link capacitance, total / C_DC tot

VECTOR_G (Tech_ctrl)

Can be changed: U, T	**Calculated:** -	**Access level:** 3
Data type: FloatingPoint32	**Dynamic index:** -	**Func. diagram:** -
P-Group: Closed-loop control	**Units group:** -	**Unit selection:** -
Not for motor type: -	**Scaling:** -	**Expert list:** 1
Min	**Max**	**Factory setting**
0.20 [mF]	2000.00 [mF]	2.00 [mF]

Description: Sets the total DC link capacitance for closed-loop voltage control.

The capacitance of one power unit is pre-assigned to this value. The value should be adapted according to the number of power units.

Note: The controller setting for the DC-link voltage controller is derived from this value.

p3490 Infeed delay time OFF1 command / INF t_del OFF1

B_INF

Can be changed: T	**Calculated:** -	**Access level:** 2
Data type: FloatingPoint32	**Dynamic index:** -	**Func. diagram:** 8732, 8832, 8932
P-Group: Closed-loop control	**Units group:** -	**Unit selection:** -
Not for motor type: -	**Scaling:** -	**Expert list:** 1
Min	**Max**	**Factory setting**
0.0 [ms]	1000000.0 [ms]	0.0 [ms]

Description: Sets the delay time for the ON/OFF1 command of the infeed.

After ON/OFF1 = 0 the infeed remains in operation for the specified time

Dependency: Refer to: p0840

Notice: The ON/OFF1 command of the infeed can be interrupted.

Note: This parameter is only relevant if a Motor Module and the infeed are controlled by the same OFF command. In this case, the delay time and the stop ramp time of the motor can be coordinated with one another.

p3510 DC link voltage setpoint / Vdc setp

VECTOR_G (Tech_ctrl)

Can be changed: U, T	**Calculated:** -	**Access level:** 2
Data type: FloatingPoint32	**Dynamic index:** -	**Func. diagram:** -
P-Group: Closed-loop control	**Units group:** 5_2	**Unit selection:** p0505
Not for motor type: -	**Scaling:** p2001	**Expert list:** 1
Min	**Max**	**Factory setting**
100.00 [V]	1600.00 [V]	600.00 [V]

Description: Sets the setpoint for the DC-link voltage on the motor side.

p3511 CI: DC-link voltage supplementary setpoint / Vdc Z_set

VECTOR_G (Tech_ctrl)

Can be changed: T	**Calculated:** -	**Access level:** 3
Data type: Unsigned32 / FloatingPoint32	**Dynamic index:** -	**Func. diagram:** -
P-Group: Closed-loop control	**Units group:** -	**Unit selection:** -
Not for motor type: -	**Scaling:** p2001	**Expert list:** 1
Min	**Max**	**Factory setting**
-	-	0

Description: Sets the signal source for the supplementary setpoint for the DC-link voltage on the motor side.

Dependency: Refer to: p3510

© Siemens AG 2012 All Rights Reserved

p3513 BI: Inhibit voltage-controlled operation / Inhib U_ctrl mode

VECTOR_G (Tech_ctrl)

Can be changed: U, T	**Calculated:** -	**Access level:** 3
Data type: Unsigned32 / Binary	**Dynamic index:** -	**Func. diagram:** -
P-Group: -	**Units group:** -	**Unit selection:** -
Not for motor type: -	**Scaling:** -	**Expert list:** 1
Min	**Max**	**Factory setting**
-	-	1

Description: Sets the signal source for disabling DC-link voltage control on the motor side.

r3517 CO: DC-link controller active current setpoint / Vdc I_act set

VECTOR_G (Tech_ctrl)

Can be changed: -	**Calculated:** -	**Access level:** 3
Data type: FloatingPoint32	**Dynamic index:** -	**Func. diagram:** -
P-Group: Closed-loop control	**Units group:** 6_2	**Unit selection:** p0505
Not for motor type: -	**Scaling:** p2002	**Expert list:** 1
Min	**Max**	**Factory setting**
- [Arms]	- [Arms]	- [Arms]

Description: Displays the unlimited setpoint of the active current controller for DC-link voltage control on the motor side.

p3520[0...3] CI: DC link pre-control power / Vdc pre-ctrl P

VECTOR_G (Tech_ctrl)

Can be changed: U, T	**Calculated:** -	**Access level:** 2
Data type: Unsigned32 / FloatingPoint32	**Dynamic index:** -	**Func. diagram:** -
P-Group: Closed-loop control	**Units group:** -	**Unit selection:** -
Not for motor type: -	**Scaling:** -	**Expert list:** 1
Min	**Max**	**Factory setting**
-	-	0

Description: Sets the signal source for power pre-control.

Dependency: Refer to: p3521

Note: Closed-loop control of the DC link voltage is improved by pre-controlling the power required for the other modules.

A non-scaled quantity is expected so that the various power reference values (r2004) of the drive objects do not have to be taken into account. The scaling factors are used to adapt the scaling (p3521).

p3521[0...3] DC link pre-control power scaling / Vdc prectrl P scal

VECTOR_G (Tech_ctrl)

Can be changed: U, T	**Calculated:** -	**Access level:** 2
Data type: FloatingPoint32	**Dynamic index:** -	**Func. diagram:** -
P-Group: Closed-loop control	**Units group:** -	**Unit selection:** -
Not for motor type: -	**Scaling:** PERCENT	**Expert list:** 1
Min	**Max**	**Factory setting**
-100000.00000 [%]	100000.00000 [%]	100.00000 [%]

Description: Sets the scaling factor for the power pre-control.

Dependency: Refer to: p3520

p3523[0...3] DC link pre-control power smoothing / Vdc pre-ctrl P sm

VECTOR_G (Tech_ctrl)

Can be changed: U, T	**Calculated:** -	**Access level:** 2
Data type: FloatingPoint32	**Dynamic index:** -	**Func. diagram:** -
P-Group: -	**Units group:** -	**Unit selection:** -
Not for motor type: -	**Scaling:** -	**Expert list:** 1
Min	**Max**	**Factory setting**
0 [ms]	1000 [ms]	0 [ms]

Description: Sets the filter time for power pre-control.

Dependency: Refer to: p3520

© Siemens AG 2012 All Rights Reserved

r3554 Vdc controller integral component / Vdc_ctrl I_comp

VECTOR_G (Tech_ctrl)

Can be changed: -	**Calculated:** -	**Access level:** 2
Data type: FloatingPoint32	**Dynamic index:** -	**Func. diagram:** -
P-Group: Closed-loop control	**Units group:** 6_2	**Unit selection:** p0505
Not for motor type: -	**Scaling:** p2002	**Expert list:** 1
Min	**Max**	**Factory setting**
- [Arms]	- [Arms]	- [Arms]

Description: Displays the integral action component of the DC link voltage controller (Vdc controller).

p3560 Vdc controller proportional gain / Vdc_ctrl Kp

VECTOR_G (Tech_ctrl)

Can be changed: U, T	**Calculated:** -	**Access level:** 2
Data type: FloatingPoint32	**Dynamic index:** -	**Func. diagram:** -
P-Group: Closed-loop control	**Units group:** -	**Unit selection:** -
Not for motor type: -	**Scaling:** -	**Expert list:** 1
Min	**Max**	**Factory setting**
0.01 [%]	1000.00 [%]	100.00 [%]

Description: Sets the scaled proportional gain for the DC link voltage controller (Vdc controller).

Note: A value of 100% corresponds to the basic setting derived from the loop control parameter (p3422).

p3562 Vdc controller integral time / Vdc_ctrl Tn

VECTOR_G (Tech_ctrl)

Can be changed: U, T	**Calculated:** -	**Access level:** 2
Data type: FloatingPoint32	**Dynamic index:** -	**Func. diagram:** -
P-Group: Closed-loop control	**Units group:** -	**Unit selection:** -
Not for motor type: -	**Scaling:** -	**Expert list:** 1
Min	**Max**	**Factory setting**
0.10 [%]	100000.00 [%]	100.00 [%]

Description: Sets the scaled integral time for the DC link voltage controller (Vdc).

Note: A value of 100% corresponds to the basic setting derived from the loop control parameter (p3422).

p3660[0...n] VSM input line supply voltage, voltage scaler / VSM inp U_scaler

VECTOR_G

Can be changed: T	**Calculated:** -	**Access level:** 3
Data type: FloatingPoint32	**Dynamic index:** p0150	**Func. diagram:** 9880
P-Group: Closed-loop control	**Units group:** -	**Unit selection:** -
Not for motor type: -	**Scaling:** PERCENT	**Expert list:** 1
Min	**Max**	**Factory setting**
0.00 [%]	100000.00 [%]	0.00 [%]

Description: Sets the voltage scaler for the Voltage Sensing Module (VSM).

Note: When the 690 V input is used (X522) without voltage scaler, 0 % should be entered.

When the 100 V input (X521) is used with voltage scaler to measure medium voltages, the dividing (scaling) factor multiplied by 100% should be entered.

Example:

1000 V line supply voltage, voltage scaling, 10:1

--> voltage at the VSM input is 100 V

--> p3660 = 10 * 100 % = 1000 %

© Siemens AG 2012 All Rights Reserved

r3661[0...n] CO: VSM input line supply voltage u1 - u2 / VSM inp u1-u2

VECTOR_G

Can be changed: -	**Calculated:** -	**Access level:** 3
Data type: FloatingPoint32	**Dynamic index:** p0150	**Func. diagram:** -
P-Group: Closed-loop control	**Units group:** 5_3	**Unit selection:** p0505
Not for motor type: -	**Scaling:** p2001	**Expert list:** 1
Min	**Max**	**Factory setting**
- [V]	- [V]	- [V]

Description: Displays the input voltage between phases L1 and L2 for the Voltage Sensing Module (VSM).

Dependency: Refer to: p3660

Note: X521.1 or X522.1: Connection of L1
X521.2 or X522.2: Connection of L2
X521.3 or X522.3: Connection of L3

r3662[0...n] CO: VSM input line supply voltage u2 - u3 / VSM inp u2-u3

VECTOR_G

Can be changed: -	**Calculated:** -	**Access level:** 3
Data type: FloatingPoint32	**Dynamic index:** p0150	**Func. diagram:** -
P-Group: Closed-loop control	**Units group:** 5_3	**Unit selection:** p0505
Not for motor type: -	**Scaling:** p2001	**Expert list:** 1
Min	**Max**	**Factory setting**
- [V]	- [V]	- [V]

Description: Displays the input voltage between phases L2 and L3 for the Voltage Sensing Module (VSM).

Dependency: Refer to: p3660

Note: X521.1 or X522.1: Connection of L1
X521.2 or X522.2: Connection of L2
X521.3 or X522.3: Connection of L3

r3664[0...n] CO: VSM temperature evaluation, status / VSM temp status

VECTOR_G

Can be changed: -	**Calculated:** -	**Access level:** 3
Data type: Unsigned16	**Dynamic index:** p0150	**Func. diagram:** 9886
P-Group: Terminals	**Units group:** -	**Unit selection:** -
Not for motor type: -	**Scaling:** -	**Expert list:** 1
Min	**Max**	**Factory setting**
-	-	-

Description: Displays the status of the temperature evaluation of the Voltage Sensing Module (VSM).
This displays whether the temperature actual value has exceeded the fault/alarm threshold.

Bit field:

Bit	Signal name	1 signal	0 signal	FP
00	Alarm is present	Yes	No	-
01	Fault is present	Yes	No	-

Dependency: Refer to: p3665, r3666, p3667, p3668

p3665[0...n] VSM temperature evaluation, sensor type / VSM TempSensorType

VECTOR_G

Can be changed: T	**Calculated:** -	**Access level:** 3
Data type: Integer16	**Dynamic index:** p0150	**Func. diagram:** 9886
P-Group: Closed-loop control	**Units group:** -	**Unit selection:** -
Not for motor type: -	**Scaling:** -	**Expert list:** 1
Min	**Max**	**Factory setting**
0	2	0

Description: Setting of the temperature sensor for the Voltage Sensing Module (VSM).
The temperature sensor is connected to terminals X520.5 and X520.6 of the VSM.

Value:
0: No sensor
1: PTC
2: KTY84

© Siemens AG 2012 All Rights Reserved

Note: The pre-assignment of the parameter depends on the device type. For chassis power units, the temperature monitoring of the line filter is active (p3665 = 2).

r3666[0...n] CO: VSM temperature KTY / VSM temp KTY

VECTOR_G

Can be changed: -	**Calculated:** -	**Access level:** 3
Data type: FloatingPoint32	**Dynamic index:** p0150	**Func. diagram:** 9886
P-Group: Closed-loop control	**Units group:** 21_1	**Unit selection:** p0505
Not for motor type: -	**Scaling:** p2006	**Expert list:** 1
Min	**Max**	**Factory setting**
- [°C]	- [°C]	- [°C]

Description: Displays the temperature actual value of a KTY84 temperature sensor connected to the Voltage Sensing Module (VSM).
Prerequisite:
A KTY84 sensor is connected and p3665 is set to 2.

Dependency: Refer to: p3665

Note: For sensor type PTC (p3665 = 1), the following applies:
- below the nominal response temperature, r3666 = -50°C.
- above the nominal response temperature, r3666 = 199.9 °C.

p3667[0...n] VSM line filter overtemperature alarm threshold / VSMfilt_T A_thresh

VECTOR_G

Can be changed: T	**Calculated:** -	**Access level:** 3
Data type: FloatingPoint32	**Dynamic index:** p0150	**Func. diagram:** 9886
P-Group: -	**Units group:** 21_1	**Unit selection:** p0505
Not for motor type: -	**Scaling:** p2006	**Expert list:** 1
Min	**Max**	**Factory setting**
0.00 [°C]	301.00 [°C]	150.00 [°C]

Description: Sets the alarm threshold for the KTY temperature sensor of the Voltage Sensing Module (VSM) to monitor the line filter temperature.
Prerequisite:
A KTY84 sensor is connected and p3665 is set to 2.

Dependency: Refer to: p3665
Refer to: A34211

p3668[0...n] VSM line filter overtemperature shutdown threshold / VSM filt_T F_thres

VECTOR_G

Can be changed: T	**Calculated:** -	**Access level:** 3
Data type: FloatingPoint32	**Dynamic index:** p0150	**Func. diagram:** 9886
P-Group: -	**Units group:** 21_1	**Unit selection:** p0505
Not for motor type: -	**Scaling:** p2006	**Expert list:** 1
Min	**Max**	**Factory setting**
0.00 [°C]	301.00 [°C]	180.00 [°C]

Description: Sets the shutdown threshold for the KTY temperature sensor of the VSM to monitor the line filter temperature.

Dependency: Refer to: p3667
Refer to: F34207

p3669[0...n] VSM line filter overtemperature hysteresis / VSM filt_T hyst

VECTOR_G

Can be changed: T	**Calculated:** -	**Access level:** 3
Data type: FloatingPoint32	**Dynamic index:** p0150	**Func. diagram:** 9886
P-Group: -	**Units group:** 21_2	**Unit selection:** p0505
Not for motor type: -	**Scaling:** p2006	**Expert list:** 1
Min	**Max**	**Factory setting**
1.00 [K]	50.00 [K]	3.00 [K]

Description: Sets the hysteresis for the alarm threshold of the VSM to monitor the line filter temperature.

Dependency: Refer to: p3667

© Siemens AG 2012 All Rights Reserved

p3670[0...n] VSM 10 V input CT gain / VSM CT_gain

VECTOR_G	**Can be changed:** T	**Calculated:** -	**Access level:** 3
	Data type: FloatingPoint32	**Dynamic index:** p0150	**Func. diagram:** 9880
	P-Group: Closed-loop control	**Units group:** -	**Unit selection:** -
	Not for motor type: -	**Scaling:** p2002	**Expert list:** 1
	Min	**Max**	**Factory setting**
	0.000 [A]	1000.000 [A]	1.000 [A]

Description: Sets CT gain of the CT connected at the 10 V input of the Voltage Sensing Module (VSM).
The parameter specifies the current magnitude in [A] referred to the input voltage at the VSM in [V].
Example:
CT with 1 V per 200 A.
--> p3670 = 200

Dependency: Refer to: r3671, r3672

Note: The CT for phase 1 is connected at terminals X520.1 and X520.2 of the VSM.
The CT for phase 2 is connected at terminals X520.3 and X520.4 of the VSM.

r3671[0...n] CO: VSM 10 V input CT 1 actual value / VSM CT 1 I_act

VECTOR_G	**Can be changed:** -	**Calculated:** -	**Access level:** 3
	Data type: FloatingPoint32	**Dynamic index:** p0150	**Func. diagram:** 9880
	P-Group: Closed-loop control	**Units group:** -	**Unit selection:** -
	Not for motor type: -	**Scaling:** p2002	**Expert list:** 1
	Min	**Max**	**Factory setting**
	- [A]	- [A]	- [A]

Description: Displays the current actual value from current transducer (CT) 1 at the 10 V input of the Voltage Sensing Module (VSM).

Dependency: Refer to: p3670

Note: The CT for phase 1 is connected at terminals X520.1 and X520.2 of the VSM.

r3672[0...n] CO: VSM 10 V input CT 2 actual value / VSM CT 2 I_act

VECTOR_G	**Can be changed:** -	**Calculated:** -	**Access level:** 3
	Data type: FloatingPoint32	**Dynamic index:** p0150	**Func. diagram:** 9880
	P-Group: Closed-loop control	**Units group:** -	**Unit selection:** -
	Not for motor type: -	**Scaling:** p2002	**Expert list:** 1
	Min	**Max**	**Factory setting**
	- [A]	- [A]	- [A]

Description: Displays the current actual value from current transducer (CT) 2 at the 10 V input of the Voltage Sensing Module (VSM).

Dependency: Refer to: p3670

Note: The CT for phase 2 is connected at terminals X520.3 and X520.4 of the VSM.

r3673[0...n] CO: VSM 10 V input 1 actual value / VSM inp 1 U_act

VECTOR_G	**Can be changed:** -	**Calculated:** -	**Access level:** 3
	Data type: FloatingPoint32	**Dynamic index:** p0150	**Func. diagram:** 9880
	P-Group: Closed-loop control	**Units group:** -	**Unit selection:** -
	Not for motor type: -	**Scaling:** p2001	**Expert list:** 1
	Min	**Max**	**Factory setting**
	- [V]	- [V]	- [V]

Description: Displays the actual value of the voltage measured at the 10 V input 1 of the Voltage Sensing Modules (VSM).

Dependency: Refer to: p3670

Note: 10 V input 1: Terminals X520.1 and X520.2

© Siemens AG 2012 All Rights Reserved

r3674[0...n] CO: VSM 10 V input 2 actual value / VSM inp 2 U_act

VECTOR_G	**Can be changed:** -	**Calculated:** -	**Access level:** 3
	Data type: FloatingPoint32	**Dynamic index:** p0150	**Func. diagram:** 9880
	P-Group: Closed-loop control	**Units group:** -	**Unit selection:** -
	Not for motor type: -	**Scaling:** p2001	**Expert list:** 1
	Min	**Max**	**Factory setting**
	- [V]	- [V]	- [V]

Description: Displays the actual value of the voltage measured at the 10 V input 2 of the Voltage Sensing Modules (VSM).

Dependency: Refer to: p3670

Note: 10 V input 2: Terminals X520.3 and X520.4

p3680 BI: Braking Module internal inhibit / BM int inhib

B_INF	**Can be changed:** T	**Calculated:** -	**Access level:** 3
	Data type: Unsigned32 / Binary	**Dynamic index:** -	**Func. diagram:** -
	P-Group: -	**Units group:** -	**Unit selection:** -
	Not for motor type: -	**Scaling:** -	**Expert list:** 1
	Min	**Max**	**Factory setting**
	-	-	0

Description: Sets the signal source to inhibit the internal Braking Module.
BI: p3680 = 1 signal:
The Braking Module is inhibited.
BI: p3680 = 0 signal:
The Braking Module is enabled.

Dependency: Refer to: A06904

Caution: When the Braking Module is inhibited, no energy can be dissipated in the braking resistor.

p3681 BI: Activating Braking Module internal DC link fast discharge / BM intDCdischg act

B_INF	**Can be changed:** T	**Calculated:** -	**Access level:** 3
	Data type: Unsigned32 / Binary	**Dynamic index:** -	**Func. diagram:** -
	P-Group: -	**Units group:** -	**Unit selection:** -
	Not for motor type: -	**Scaling:** -	**Expert list:** 1
	Min	**Max**	**Factory setting**
	-	-	0

Description: Sets the signal source to activate the DC link fast discharge for an internal braking module.
When the following conditions apply, the DC link fast discharge is started later with delay time (p3682):
- BI: p3681 = 1 signal.
- an external line contactor is opened via r0863.1 "energize contactor".
The DC link fast discharge is interrupted when the following conditions apply:
- BI: p3681 = 0 signal.
- ON command for the infeed.

Recommend.: The DC link fast discharge should be activated if there is an external line contactor and is correctly interconnected (r0863.1, p0860). If the DC link fast discharge is not activated together with an external line contactor, then faults could occur when pre-charging (e.g. F300027).

Dependency: Refer to: p3682
Refer to: F30027

Notice: The parameter is only effective for Basic Line Modules with the internal Braking Module (this is valid for Basic Line Modules with a power rating of less than 100 kW).

© Siemens AG 2012 All Rights Reserved

p3682 Braking Module internal DC link fast discharge delay time / BM int DC dischg t

B_INF

Can be changed: C1(3), T	**Calculated:** -	**Access level:** 3
Data type: Unsigned32	**Dynamic index:** -	**Func. diagram:** -
P-Group: Communications	**Units group:** -	**Unit selection:** -
Not for motor type: -	**Scaling:** -	**Expert list:** 1
Min	**Max**	**Factory setting**
500 [ms]	4294967295 [ms]	1000 [ms]

Description: Sets the delay time for switching in the DC link fast discharge for an internal Braking Module.

Dependency: Refer to: p3681

Notice: The parameter is only effective for Basic Line Modules with the internal Braking Module (this is valid for Basic Line Modules with a power rating of less than 100 kW).

p3683 Braking Module internal activation threshold brake chopper / BM int act thresh

B_INF

Can be changed: C2(1)	**Calculated:** -	**Access level:** 3
Data type: FloatingPoint32	**Dynamic index:** -	**Func. diagram:** -
P-Group: Converter	**Units group:** -	**Unit selection:** -
Not for motor type: -	**Scaling:** -	**Expert list:** 1
Min	**Max**	**Factory setting**
110.00 [V]	780.00 [V]	760.00 [V]

Description: Sets the activation threshold for the braking chopper.

Note: The activation threshold is only effective if the "Device supply voltage reduced" function (p0212.0 = 1) has been activated!

r3685 BO: Digital Braking Module: Pre-alarm I2t shutdown / Dig BM A I2t shutd

B_INF

Can be changed: -	**Calculated:** -	**Access level:** 3
Data type: Unsigned32	**Dynamic index:** -	**Func. diagram:** -
P-Group: -	**Units group:** -	**Unit selection:** -
Not for motor type: -	**Scaling:** -	**Expert list:** 1
Min	**Max**	**Factory setting**
-	-	-

Description: The binector output uses a 1 signal to indicate that 80 % of the highest permissible I2t value has been reached in the Braking Module.

Dependency: Refer to: A06905

r3686 BO: Digital Braking Module Fault / Dig BM Fault

B_INF

Can be changed: -	**Calculated:** -	**Access level:** 3
Data type: Unsigned32	**Dynamic index:** -	**Func. diagram:** -
P-Group: -	**Units group:** -	**Unit selection:** -
Not for motor type: -	**Scaling:** -	**Expert list:** 1
Min	**Max**	**Factory setting**
-	-	-

Description: The binector output uses a 1 signal to indicate an overcurrent fault or an I2t shutdown in the Braking Module.

Dependency: Refer to: F06906

r3687 BO: Digital Braking Module pre-alarm overtemperature / Dig BM A overtemp

B_INF

Can be changed: -	**Calculated:** -	**Access level:** 3
Data type: Unsigned32	**Dynamic index:** -	**Func. diagram:** -
P-Group: -	**Units group:** -	**Unit selection:** -
Not for motor type: -	**Scaling:** -	**Expert list:** 1
Min	**Max**	**Factory setting**
-	-	-

Description: Displays a fault due to the excessively high temperature.

© Siemens AG 2012 All Rights Reserved

1 signal:
The connected temperature sensor (X21.1, X21.2) signals an overtemperature.

Recommend.: Measure the braking resistor temperature using the temperature sensor.

r3688 BO: Braking Module internal overtemperature shutdown / BM int temp shutd

B_INF

Can be changed: -	**Calculated:** -	**Access level:** 3
Data type: Unsigned32	**Dynamic index:** -	**Func. diagram:** -
P-Group: -	**Units group:** -	**Unit selection:** -
Not for motor type: -	**Scaling:** -	**Expert list:** 1
Min	**Max**	**Factory setting**
-	-	-

Description: Displays the shutdown due to the excessively high temperature.
1 signal:
The connected temperature sensor (X21.1, X21.2) signals an overtemperature. The highest permissible temperature at the connected temperature sensor has been exceeded and results in a shutdown.

Dependency: Refer to: F06908

r3689 BO: Digital Braking Module Uce fault / Dig BM Uce fault

B_INF

Can be changed: -	**Calculated:** -	**Access level:** 3
Data type: Unsigned32	**Dynamic index:** -	**Func. diagram:** -
P-Group: -	**Units group:** -	**Unit selection:** -
Not for motor type: -	**Scaling:** -	**Expert list:** 1
Min	**Max**	**Factory setting**
-	-	-

Description: Displays an Uce fault in the internal Braking Module.
1 signal:
An Uce fault is present in the internal Braking Module.

Dependency: Refer to: F06909

p3784[0...n] BI: Sync-line-drive external increase voltage / Sync ext U incr

VECTOR_G

Can be changed: T	**Calculated:** -	**Access level:** 2
Data type: Unsigned32 / Binary	**Dynamic index:** CDS, p0170	**Func. diagram:** -
P-Group: Functions	**Units group:** -	**Unit selection:** -
Not for motor type: -	**Scaling:** -	**Expert list:** 0
Min	**Max**	**Factory setting**
-	-	0

Description: Sets the signal source to increase the voltage for external line-drive synchronization.
BI: p3784 = 1 signal:
The voltage is increased.

Note: Only SINAMICS GM150.

p3785[0...n] BI: Sync-line-drive external decrease voltage / Sync ext U decr

VECTOR_G

Can be changed: T	**Calculated:** -	**Access level:** 2
Data type: Unsigned32 / Binary	**Dynamic index:** CDS, p0170	**Func. diagram:** -
P-Group: Functions	**Units group:** -	**Unit selection:** -
Not for motor type: -	**Scaling:** -	**Expert list:** 0
Min	**Max**	**Factory setting**
-	-	0

Description: Sets the signal source to decrease the voltage for external line-drive synchronization.
BI: p3785 = 1 signal:
The voltage is lowered.

Note: Only SINAMICS GM150.

© Siemens AG 2012 All Rights Reserved

p3800[0...n] Sync-line-drive activation / Sync act

VECTOR_G	**Can be changed:** T	**Calculated:** -	**Access level:** 2
	Data type: Integer16	**Dynamic index:** DDS, p0180	**Func. diagram:** 7020
	P-Group: Functions	**Units group:** -	**Unit selection:** -
	Not for motor type: -	**Scaling:** -	**Expert list:** 1
	Min	**Max**	**Factory setting**
	0	1	0

Description: Sets the activation for the line-drive synchronization.

Value:
0: Sync-line-drive de-activated
1: Sync-line-drive activated VSM-INT

Dependency: Refer to: p3801, p3802

Note: When the ground fault monitoring initiates a fault for overlapping synchronizing the threshold value p0287[1] for the Motor Module and the associated infeed must be appropriately increased (e.g. p0287[1] = 100 %).

For p3800 = 1, the following applies:

The INTERNAL voltage actual values are used for synchronization. The effects that a (sine-wave) filter - that is connected between the Motor Module and motor - has on the voltage actual values are taken into account (theoretically) by appropriately selecting p0230.

VSM: Voltage Sensing Module

p3801[0...n] Sync-line-drive, drive object number / Sync DO_No

VECTOR_G	**Can be changed:** T	**Calculated:** -	**Access level:** 2
	Data type: Unsigned16	**Dynamic index:** DDS, p0180	**Func. diagram:** 7020
	P-Group: Functions	**Units group:** -	**Unit selection:** -
	Not for motor type: -	**Scaling:** -	**Expert list:** 1
	Min	**Max**	**Factory setting**
	1	62	1

Description: Sets the drive object number of the Voltage Sensing Module (VSM) used for the line-drive synchronization.

Dependency: Refer to: p3800, p3802

Notice: The current controller sampling time p0115[0] of the drive object with the VSM used for synchronization must be identical to the current controller sampling time of the drive of the drive used to perform line synchronization.

Note: VSM: Voltage Sensing Module

The setting p3801 = 1 is always possible (no VSM selected).

If the VSM is assigned subsequently to a Motor Module, its drive object number must be entered in p3801.

The line voltage is always measured using the first VSM (see p0151 index 0).

p3802[0...n] BI: Sync-line-drive enable / Sync enable

VECTOR_G	**Can be changed:** T	**Calculated:** -	**Access level:** 2
	Data type: Unsigned32 / Binary	**Dynamic index:** CDS, p0170	**Func. diagram:** 7020
	P-Group: Functions	**Units group:** -	**Unit selection:** -
	Not for motor type: -	**Scaling:** -	**Expert list:** 1
	Min	**Max**	**Factory setting**
	-	-	0

Description: Sets the signal source to switch in/switch out for the line-drive synchronization.

BI: p3802 = 1 signal:

The line-drive synchronization is switched in.

Dependency: Refer to: p3800, p3801

© Siemens AG 2012 All Rights Reserved

r3803.0 CO/BO: Sync-line-drive control word / Sync STW

VECTOR_G

Can be changed: -	**Calculated:** -	**Access level:** 2
Data type: Unsigned32	**Dynamic index:** -	**Func. diagram:** -
P-Group: Functions	**Units group:** -	**Unit selection:** -
Not for motor type: -	**Scaling:** -	**Expert list:** 1
Min	**Max**	**Factory setting**
-	-	-

Description: Displays the control word for the line-drive synchronization.

Bit field:

Bit	Signal name	1 signal	0 signal	FP
00	Sync-line-drive selected	Yes	No	-

Note: Re bit 00:
For a 1 signal, p3800 > 0 is set.

r3804 CO: Sync-line-drive target frequency / Sync f_target

VECTOR_G

Can be changed: -	**Calculated:** -	**Access level:** 2
Data type: FloatingPoint32	**Dynamic index:** -	**Func. diagram:** 3030, 7020
P-Group: Functions	**Units group:** -	**Unit selection:** -
Not for motor type: -	**Scaling:** p2000	**Expert list:** 1
Min	**Max**	**Factory setting**
- [Hz]	- [Hz]	- [Hz]

Description: Displays the target frequency for the line-drive synchronization.

Dependency: Refer to: A07941

r3805 CO: Sync-line-drive frequency difference / Sync f_diff

VECTOR_G

Can be changed: -	**Calculated:** -	**Access level:** 2
Data type: FloatingPoint32	**Dynamic index:** -	**Func. diagram:** 7020
P-Group: Functions	**Units group:** -	**Unit selection:** -
Not for motor type: -	**Scaling:** p2000	**Expert list:** 1
Min	**Max**	**Factory setting**
- [Hz]	- [Hz]	- [Hz]

Description: Displays the frequency difference between the measured target frequency and output frequency of the gating unit of the closed-loop control for line-drive synchronization.

p3806[0...n] Sync-line-drive frequency difference threshold value / Sync f_diff thresh

VECTOR_G

Can be changed: U, T	**Calculated:** CALC_MOD_LIM_REF	**Access level:** 2
Data type: FloatingPoint32	**Dynamic index:** DDS, p0180	**Func. diagram:** 7020
P-Group: Functions	**Units group:** -	**Unit selection:** -
Not for motor type: -	**Scaling:** -	**Expert list:** 1
Min	**Max**	**Factory setting**
0.00 [Hz]	1.00 [Hz]	0.10 [Hz]

Description: Sets the threshold value of the frequency difference to activate the closed-loop phase control for line-drive synchronization.
The closed-loop phase control is activated (r3819.6 = 1), if the frequency difference is less that the threshold value.

© Siemens AG 2012 All Rights Reserved

r3808 CO: Sync-line-drive phase difference / Sync phase diff

VECTOR_G

Can be changed: -	**Calculated:** -	**Access level:** 2
Data type: FloatingPoint32	**Dynamic index:** -	**Func. diagram:** 7020
P-Group: Functions	**Units group:** -	**Unit selection:** -
Not for motor type: -	**Scaling:** p2005	**Expert list:** 1
Min	**Max**	**Factory setting**
- [°]	- [°]	- [°]

Description: Displays the phase difference between the measured target phase and phase of the gating unit of the closed-loop control for line-drive synchronization.

p3809[0...n] Sync-line-drive phase setpoint / Sync phase setp

VECTOR_G

Can be changed: U, T	**Calculated:** -	**Access level:** 2
Data type: FloatingPoint32	**Dynamic index:** DDS, p0180	**Func. diagram:** 7020
P-Group: Functions	**Units group:** -	**Unit selection:** -
Not for motor type: -	**Scaling:** -	**Expert list:** 1
Min	**Max**	**Factory setting**
-180.00 [°]	179.90 [°]	0.00 [°]

Description: Sets the phase setpoint for the line-drive synchronization.

p3811[0...n] Sync-line-drive frequency limiting / Sync f_lim

VECTOR_G

Can be changed: U, T	**Calculated:** -	**Access level:** 2
Data type: FloatingPoint32	**Dynamic index:** DDS, p0180	**Func. diagram:** 7020
P-Group: Functions	**Units group:** -	**Unit selection:** -
Not for motor type: -	**Scaling:** -	**Expert list:** 1
Min	**Max**	**Factory setting**
0.00 [Hz]	1.00 [Hz]	0.20 [Hz]

Description: Sets the frequency limiting of the phase controller output for the line-drive synchronization.

r3812 CO: Sync-line-drive correction frequency / Sync f_corr

VECTOR_G

Can be changed: -	**Calculated:** -	**Access level:** 2
Data type: FloatingPoint32	**Dynamic index:** -	**Func. diagram:** 3080, 7020
P-Group: Functions	**Units group:** -	**Unit selection:** -
Not for motor type: -	**Scaling:** p2000	**Expert list:** 1
Min	**Max**	**Factory setting**
- [Hz]	- [Hz]	- [Hz]

Description: Displays the correction frequency for the line-drive synchronization.

p3813[0...n] Sync-line-drive phase synchronism threshold value / Sync Ph_sync thrsh

VECTOR_G

Can be changed: U, T	**Calculated:** -	**Access level:** 2
Data type: FloatingPoint32	**Dynamic index:** DDS, p0180	**Func. diagram:** 7020
P-Group: Functions	**Units group:** -	**Unit selection:** -
Not for motor type: -	**Scaling:** -	**Expert list:** 1
Min	**Max**	**Factory setting**
1.00 [°]	20.00 [°]	2.00 [°]

Description: Sets the threshold value of the phase synchronism for the line-drive synchronization.
A prerequisite for synchronism is achieved if the phase difference is lower than the threshold value.

Note: Synchronism is reached (r3819.2 = 1), if the AND logic operation of the results from the phase measurement (p3813) and voltage measurement (p3815) is fulfilled.

© Siemens AG 2012 All Rights Reserved

r3814 CO: Sync-line-drive voltage difference / Sync U_diff

VECTOR_G

Can be changed: -	**Calculated:** -	**Access level:** 2
Data type: FloatingPoint32	**Dynamic index:** -	**Func. diagram:** 7020
P-Group: Functions	**Units group:** -	**Unit selection:** -
Not for motor type: -	**Scaling:** p2001	**Expert list:** 1
Min	**Max**	**Factory setting**
- [Vrms]	- [Vrms]	- [Vrms]

Description: Displays the voltage difference between the measured target voltage and output voltage of the gating unit of the closed-loop control for line-drive synchronization.

p3815[0...n] Sync-line-drive voltage difference threshold value / Sync U_diff thresh

VECTOR_G

Can be changed: U, T	**Calculated:** CALC_MOD_LIM_REF	**Access level:** 2
Data type: FloatingPoint32	**Dynamic index:** DDS, p0180	**Func. diagram:** 7020
P-Group: Functions	**Units group:** -	**Unit selection:** -
Not for motor type: -	**Scaling:** -	**Expert list:** 1
Min	**Max**	**Factory setting**
0.00 [%]	20.00 [%]	10.00 [%]

Description: Sets the threshold value of the voltage difference for the line-drive synchronization.

A prerequisite for synchronism is reached if the voltage difference is less than the threshold value.

Note: Synchronism is reached (r3819.2 = 1), if the AND logic operation of the results from the phase measurement (p3813) and voltage measurement (p3815) is fulfilled.

For voltage manipulated quantity margin (reserve) of the drive converter, the amplitude difference (r3814) between the setpoint and actual value is controlled (corrected) to zero.

r3819.0...7 CO/BO: Sync-line-drive status word / Sync ZSW

VECTOR_G

Can be changed: -	**Calculated:** -	**Access level:** 2
Data type: Unsigned32	**Dynamic index:** -	**Func. diagram:** 7020
P-Group: Functions	**Units group:** -	**Unit selection:** -
Not for motor type: -	**Scaling:** -	**Expert list:** 1
Min	**Max**	**Factory setting**
-	-	-

Description: Displays the status word for the line-drive synchronization.

Bit field:

Bit	Signal name	1 signal	0 signal	FP
00	Sync-line-drive enabled	Yes	No	-
02	Sync-line-drive synchronism reached	Yes	No	-
03	Sync-line-drive synchronizing error	Yes	No	-
05	Sync-line-drive frequency measurement active	Yes	No	-
06	Sync-line-drive phase control active	Yes	No	-
07	Sync-line-drive without drive	Yes	No	-

p3820[0...n] Friction characteristic, value n0 / Friction n0

VECTOR_G (n/M)

Can be changed: T	**Calculated:** CALC_MOD_LIM_REF	**Access level:** 2
Data type: FloatingPoint32	**Dynamic index:** DDS, p0180	**Func. diagram:** 7010
P-Group: Functions	**Units group:** 3_1	**Unit selection:** p0505
Not for motor type: REL	**Scaling:** -	**Expert list:** 1
Min	**Max**	**Factory setting**
0.00 [rpm]	210000.00 [rpm]	15.00 [rpm]

Description: The friction characteristic is defined by 10 value pairs.

This parameter specifies the n coordinate of the 1st value pair of the friction characteristic.

Dependency: Refer to: p3830, p3845

© Siemens AG 2012 All Rights Reserved

p3821[0...n] Friction characteristic, value n1 / Friction n1

VECTOR_G (n/M)	**Can be changed:** T	**Calculated:** CALC_MOD_LIM_REF	**Access level:** 2
	Data type: FloatingPoint32	**Dynamic index:** DDS, p0180	**Func. diagram:** 7010
	P-Group: Functions	**Units group:** 3_1	**Unit selection:** p0505
	Not for motor type: REL	**Scaling:** -	**Expert list:** 1
	Min 0.00 [rpm]	**Max** 210000.00 [rpm]	**Factory setting** 30.00 [rpm]

Description: The friction characteristic is defined by 10 value pairs.
This parameter specifies the n coordinate of the 2nd value pair of the friction characteristic.

Dependency: Refer to: p3831, p3845

p3822[0...n] Friction characteristic, value n2 / Friction n2

VECTOR_G (n/M)	**Can be changed:** T	**Calculated:** CALC_MOD_LIM_REF	**Access level:** 2
	Data type: FloatingPoint32	**Dynamic index:** DDS, p0180	**Func. diagram:** 7010
	P-Group: Functions	**Units group:** 3_1	**Unit selection:** p0505
	Not for motor type: REL	**Scaling:** -	**Expert list:** 1
	Min 0.00 [rpm]	**Max** 210000.00 [rpm]	**Factory setting** 60.00 [rpm]

Description: The friction characteristic is defined by 10 value pairs.
This parameter specifies the n coordinate of the 3rd value pair of the friction characteristic.

Dependency: Refer to: p3832, p3845

p3823[0...n] Friction characteristic, value n3 / Friction n3

VECTOR_G (n/M)	**Can be changed:** T	**Calculated:** CALC_MOD_LIM_REF	**Access level:** 2
	Data type: FloatingPoint32	**Dynamic index:** DDS, p0180	**Func. diagram:** 7010
	P-Group: Functions	**Units group:** 3_1	**Unit selection:** p0505
	Not for motor type: REL	**Scaling:** -	**Expert list:** 1
	Min 0.00 [rpm]	**Max** 210000.00 [rpm]	**Factory setting** 120.00 [rpm]

Description: The friction characteristic is defined by 10 value pairs.
This parameter specifies the n coordinate of the 4th value pair of the friction characteristic.

Dependency: Refer to: p3833, p3845

p3824[0...n] Friction characteristic, value n4 / Friction n4

VECTOR_G (n/M)	**Can be changed:** T	**Calculated:** CALC_MOD_LIM_REF	**Access level:** 2
	Data type: FloatingPoint32	**Dynamic index:** DDS, p0180	**Func. diagram:** 7010
	P-Group: Functions	**Units group:** 3_1	**Unit selection:** p0505
	Not for motor type: REL	**Scaling:** -	**Expert list:** 1
	Min 0.00 [rpm]	**Max** 210000.00 [rpm]	**Factory setting** 150.00 [rpm]

Description: The friction characteristic is defined by 10 value pairs.
This parameter specifies the n coordinate of the 5th value pair of the friction characteristic.

Dependency: Refer to: p3834, p3845

© Siemens AG 2012 All Rights Reserved

p3825[0...n] Friction characteristic, value n5 / Friction n5

VECTOR_G (n/M)	**Can be changed:** T	**Calculated:** CALC_MOD_LIM_REF	**Access level:** 2
	Data type: FloatingPoint32	**Dynamic index:** DDS, p0180	**Func. diagram:** 7010
	P-Group: Functions	**Units group:** 3_1	**Unit selection:** p0505
	Not for motor type: REL	**Scaling:** -	**Expert list:** 1
	Min 0.00 [rpm]	**Max** 210000.00 [rpm]	**Factory setting** 300.00 [rpm]

Description: The friction characteristic is defined by 10 value pairs.
This parameter specifies the n coordinate of the 6th value pair of the friction characteristic.

Dependency: Refer to: p3835, p3845

p3826[0...n] Friction characteristic, value n6 / Friction n6

VECTOR_G (n/M)	**Can be changed:** T	**Calculated:** CALC_MOD_LIM_REF	**Access level:** 2
	Data type: FloatingPoint32	**Dynamic index:** DDS, p0180	**Func. diagram:** 7010
	P-Group: Functions	**Units group:** 3_1	**Unit selection:** p0505
	Not for motor type: REL	**Scaling:** -	**Expert list:** 1
	Min 0.00 [rpm]	**Max** 210000.00 [rpm]	**Factory setting** 600.00 [rpm]

Description: The friction characteristic is defined by 10 value pairs.
This parameter specifies the n coordinate of the 7th value pair of the friction characteristic.

Dependency: Refer to: p3836, p3845

p3827[0...n] Friction characteristic, value n7 / Friction n7

VECTOR_G (n/M)	**Can be changed:** T	**Calculated:** CALC_MOD_LIM_REF	**Access level:** 2
	Data type: FloatingPoint32	**Dynamic index:** DDS, p0180	**Func. diagram:** 7010
	P-Group: Functions	**Units group:** 3_1	**Unit selection:** p0505
	Not for motor type: REL	**Scaling:** -	**Expert list:** 1
	Min 0.00 [rpm]	**Max** 210000.00 [rpm]	**Factory setting** 1200.00 [rpm]

Description: The friction characteristic is defined by 10 value pairs.
This parameter specifies the n coordinate of the 8th value pair of the friction characteristic.

Dependency: Refer to: p3837, p3845

p3828[0...n] Friction characteristic, value n8 / Friction n8

VECTOR_G (n/M)	**Can be changed:** T	**Calculated:** CALC_MOD_LIM_REF	**Access level:** 2
	Data type: FloatingPoint32	**Dynamic index:** DDS, p0180	**Func. diagram:** 7010
	P-Group: Functions	**Units group:** 3_1	**Unit selection:** p0505
	Not for motor type: REL	**Scaling:** -	**Expert list:** 1
	Min 0.00 [rpm]	**Max** 210000.00 [rpm]	**Factory setting** 1500.00 [rpm]

Description: The friction characteristic is defined by 10 value pairs.
This parameter specifies the n coordinate of the 9th value pair of the friction characteristic.

Dependency: Refer to: p3838, p3845

© Siemens AG 2012 All Rights Reserved

p3829[0...n] Friction characteristic, value n9 / Friction n9

VECTOR_G (n/M)	**Can be changed:** T	**Calculated:** CALC_MOD_LIM_REF	**Access level:** 2
	Data type: FloatingPoint32	**Dynamic index:** DDS, p0180	**Func. diagram:** 7010
	P-Group: Functions	**Units group:** 3_1	**Unit selection:** p0505
	Not for motor type: REL	**Scaling:** -	**Expert list:** 1
	Min 0.00 [rpm]	**Max** 210000.00 [rpm]	**Factory setting** 3000.00 [rpm]

Description: The friction characteristic is defined by 10 value pairs.
This parameter specifies the n coordinate of the 10th value pair of the friction characteristic.

Dependency: Refer to: p3839, p3845

p3830[0...n] Friction characteristic, value M0 / Friction M0

VECTOR_G (n/M)	**Can be changed:** T	**Calculated:** -	**Access level:** 2
	Data type: FloatingPoint32	**Dynamic index:** DDS, p0180	**Func. diagram:** 7010
	P-Group: Functions	**Units group:** 7_1	**Unit selection:** p0505
	Not for motor type: REL	**Scaling:** -	**Expert list:** 1
	Min -1000000.00 [Nm]	**Max** 1000000.00 [Nm]	**Factory setting** 0.00 [Nm]

Description: The friction characteristic is defined by 10 value pairs.
This parameter specifies the M coordinate of the 1st value pair of the friction characteristic.

Dependency: Refer to: p3820, p3845

p3831[0...n] Friction characteristic, value M1 / Friction M1

VECTOR_G (n/M)	**Can be changed:** T	**Calculated:** -	**Access level:** 2
	Data type: FloatingPoint32	**Dynamic index:** DDS, p0180	**Func. diagram:** 7010
	P-Group: Functions	**Units group:** 7_1	**Unit selection:** p0505
	Not for motor type: REL	**Scaling:** -	**Expert list:** 1
	Min -1000000.00 [Nm]	**Max** 1000000.00 [Nm]	**Factory setting** 0.00 [Nm]

Description: The friction characteristic is defined by 10 value pairs.
This parameter specifies the M coordinate of the 2nd value pair of the friction characteristic.

Dependency: Refer to: p3821, p3845

p3832[0...n] Friction characteristic, value M2 / Friction M2

VECTOR_G (n/M)	**Can be changed:** T	**Calculated:** -	**Access level:** 2
	Data type: FloatingPoint32	**Dynamic index:** DDS, p0180	**Func. diagram:** 7010
	P-Group: Functions	**Units group:** 7_1	**Unit selection:** p0505
	Not for motor type: REL	**Scaling:** -	**Expert list:** 1
	Min -1000000.00 [Nm]	**Max** 1000000.00 [Nm]	**Factory setting** 0.00 [Nm]

Description: The friction characteristic is defined by 10 value pairs.
This parameter specifies the M coordinate of the 3rd value pair of the friction characteristic.

Dependency: Refer to: p3822, p3845

© Siemens AG 2012 All Rights Reserved

p3833[0...n] Friction characteristic, value M3 / Friction M3

VECTOR_G (n/M)	**Can be changed:** T	**Calculated:** -	**Access level:** 2
	Data type: FloatingPoint32	**Dynamic index:** DDS, p0180	**Func. diagram:** 7010
	P-Group: Functions	**Units group:** 7_1	**Unit selection:** p0505
	Not for motor type: REL	**Scaling:** -	**Expert list:** 1
	Min	**Max**	**Factory setting**
	-1000000.00 [Nm]	1000000.00 [Nm]	0.00 [Nm]

Description: The friction characteristic is defined by 10 value pairs.
This parameter specifies the M coordinate of the 4th value pair of the friction characteristic.

Dependency: Refer to: p3823, p3845

p3834[0...n] Friction characteristic, value M4 / Friction M4

VECTOR_G (n/M)	**Can be changed:** T	**Calculated:** -	**Access level:** 2
	Data type: FloatingPoint32	**Dynamic index:** DDS, p0180	**Func. diagram:** 7010
	P-Group: Functions	**Units group:** 7_1	**Unit selection:** p0505
	Not for motor type: REL	**Scaling:** -	**Expert list:** 1
	Min	**Max**	**Factory setting**
	-1000000.00 [Nm]	1000000.00 [Nm]	0.00 [Nm]

Description: The friction characteristic is defined by 10 value pairs.
This parameter specifies the M coordinate of the 5th value pair of the friction characteristic.

Dependency: Refer to: p3824, p3845

p3835[0...n] Friction characteristic, value M5 / Friction M5

VECTOR_G (n/M)	**Can be changed:** T	**Calculated:** -	**Access level:** 2
	Data type: FloatingPoint32	**Dynamic index:** DDS, p0180	**Func. diagram:** 7010
	P-Group: Functions	**Units group:** 7_1	**Unit selection:** p0505
	Not for motor type: REL	**Scaling:** -	**Expert list:** 1
	Min	**Max**	**Factory setting**
	-1000000.00 [Nm]	1000000.00 [Nm]	0.00 [Nm]

Description: The friction characteristic is defined by 10 value pairs.
This parameter specifies the M coordinate of the 6th value pair of the friction characteristic.

Dependency: Refer to: p3825, p3845

p3836[0...n] Friction characteristic, value M6 / Friction M6

VECTOR_G (n/M)	**Can be changed:** T	**Calculated:** -	**Access level:** 2
	Data type: FloatingPoint32	**Dynamic index:** DDS, p0180	**Func. diagram:** 7010
	P-Group: Functions	**Units group:** 7_1	**Unit selection:** p0505
	Not for motor type: REL	**Scaling:** -	**Expert list:** 1
	Min	**Max**	**Factory setting**
	-1000000.00 [Nm]	1000000.00 [Nm]	0.00 [Nm]

Description: The friction characteristic is defined by 10 value pairs.
This parameter specifies the M coordinate of the 7th value pair of the friction characteristic.

Dependency: Refer to: p3826, p3845

© Siemens AG 2012 All Rights Reserved

p3837[0...n] Friction characteristic, value M7 / Friction M7

VECTOR_G (n/M)

Can be changed: T	**Calculated:** -	**Access level:** 2
Data type: FloatingPoint32	**Dynamic index:** DDS, p0180	**Func. diagram:** 7010
P-Group: Functions	**Units group:** 7_1	**Unit selection:** p0505
Not for motor type: REL	**Scaling:** -	**Expert list:** 1
Min	**Max**	**Factory setting**
-1000000.00 [Nm]	1000000.00 [Nm]	0.00 [Nm]

Description: The friction characteristic is defined by 10 value pairs.
This parameter specifies the M coordinate of the 8th value pair of the friction characteristic.

Dependency: Refer to: p3827, p3845

p3838[0...n] Friction characteristic, value M8 / Friction M8

VECTOR_G (n/M)

Can be changed: T	**Calculated:** -	**Access level:** 2
Data type: FloatingPoint32	**Dynamic index:** DDS, p0180	**Func. diagram:** 7010
P-Group: Functions	**Units group:** 7_1	**Unit selection:** p0505
Not for motor type: REL	**Scaling:** -	**Expert list:** 1
Min	**Max**	**Factory setting**
-1000000.00 [Nm]	1000000.00 [Nm]	0.00 [Nm]

Description: The friction characteristic is defined by 10 value pairs.
This parameter specifies the M coordinate of the 9th value pair of the friction characteristic.

Dependency: Refer to: p3828, p3845

p3839[0...n] Friction characteristic, value M9 / Friction M9

VECTOR_G (n/M)

Can be changed: T	**Calculated:** -	**Access level:** 2
Data type: FloatingPoint32	**Dynamic index:** DDS, p0180	**Func. diagram:** 7010
P-Group: Functions	**Units group:** 7_1	**Unit selection:** p0505
Not for motor type: REL	**Scaling:** -	**Expert list:** 1
Min	**Max**	**Factory setting**
-1000000.00 [Nm]	1000000.00 [Nm]	0.00 [Nm]

Description: The friction characteristic is defined by 10 value pairs.
This parameter specifies the M coordinate of the 10th value pair of the friction characteristic.

Dependency: Refer to: p3829, p3845

r3840.0...9 CO/BO: Friction characteristic, status word / Friction ZSW

VECTOR_G (n/M)

Can be changed: -	**Calculated:** -	**Access level:** 2
Data type: Unsigned32	**Dynamic index:** -	**Func. diagram:** 7010
P-Group: Functions	**Units group:** -	**Unit selection:** -
Not for motor type: REL	**Scaling:** -	**Expert list:** 1
Min	**Max**	**Factory setting**
-	-	-

Description: Displays the state of the friction characteristic.

Bit field:

Bit	Signal name	1 signal	0 signal	FP
00	Friction characteristic OK	Yes	No	-
01	Friction characteristic record activated	Yes	No	-
02	Friction characteristic record completed	Yes	No	-
03	Friction characteristic record aborted	Yes	No	-
08	Friction characteristic positive direction	Yes	No	-
09	Status model-controlled frictional torque	Upper	Lower	-

Note: Re bit 9:
For closed-control of an induction motors with encoder, the switchover between the current and observer model is displayed (see also r1751 bit 19), if p3844 is > 0.

© Siemens AG 2012 All Rights Reserved

For bit 9 = 0 (observer model active) the frictional torque is calculated from the characteristic values from the characteristic point entered into p3844.

For bit 9 = 1 (current model active) the frictional torque is calculated from the characteristic values below the characteristic point entered into p3844.

r3841 CO: Friction characteristic output / Frict outp

VECTOR_G (n/M)	**Can be changed:** -	**Calculated:** -	**Access level:** 2
	Data type: FloatingPoint32	**Dynamic index:** -	**Func. diagram:** 7010
	P-Group: Functions	**Units group:** 7_1	**Unit selection:** p0505
	Not for motor type: REL	**Scaling:** p2003	**Expert list:** 1
	Min	**Max**	**Factory setting**
	- [Nm]	- [Nm]	- [Nm]

Description: Displays the torque of the friction characteristic dependent on the speed.

Dependency: Refer to: p1569, p3842

p3842 Friction characteristic activation / Frict act

VECTOR_G (n/M)	**Can be changed:** T	**Calculated:** -	**Access level:** 2
	Data type: Integer16	**Dynamic index:** -	**Func. diagram:** 7010
	P-Group: Functions	**Units group:** -	**Unit selection:** -
	Not for motor type: REL	**Scaling:** -	**Expert list:** 1
	Min	**Max**	**Factory setting**
	0	1	0

Description: Setting to activate and de-activate the friction characteristic.

Value:
0: Friction characteristic de-activated
1: Friction characteristic activated

Dependency: Refer to: p1569, r3841, p3845

p3843[0...n] Friction characteristic smoothing time frictional torque diff. / Frict T_smooth dM

VECTOR_G (n/M)	**Can be changed:** U, T	**Calculated:** -	**Access level:** 3
	Data type: FloatingPoint32	**Dynamic index:** DDS, p0180	**Func. diagram:** -
	P-Group: Closed-loop control	**Units group:** -	**Unit selection:** -
	Not for motor type: PEM, REL, FEM	**Scaling:** -	**Expert list:** 1
	Min	**Max**	**Factory setting**
	0.00 [ms]	10000.00 [ms]	0.00 [ms]

Description: Sets the smoothing time constant (PT1) for the frictional torque difference, which is entered when changing over the status bit r3840 bit 9.

Dependency: Refer to: p3844

p3844[0...n] Friction characteristic number changeover point upper / Frict chngov pt up

VECTOR_G (n/M)	**Can be changed:** U, T	**Calculated:** -	**Access level:** 3
	Data type: Unsigned8	**Dynamic index:** DDS, p0180	**Func. diagram:** -
	P-Group: Closed-loop control	**Units group:** -	**Unit selection:** -
	Not for motor type: PEM, REL, FEM	**Scaling:** -	**Expert list:** 1
	Min	**Max**	**Factory setting**
	0	4	0

Description: Selects the upper changeover point of the friction characteristic for the frictional torque input controlled by the motor model of the induction motor.

The speed of this changeover point is preassigned when automatically calculating with the changeover speed p1752. The changeover point located below is preassigned with the changeover speed p1752 * (1 - p1753).

Example: p3844 = 3 means that the speed value for the change to the monitor model (p3823 = p1752) is entered into p3823 (friction characteristic value n3).

Depending on the display of r3840 bit 9, the frictional torque is calculated from the friction characteristic values, which are associated with these changeover points. For the changeover of the motor model, with hysteresis, the frictional torque smoothed with p3843 changes between these two states.

© Siemens AG 2012 All Rights Reserved

Dependency: As part of the automatic calculation (p0340), p3844 is only activated for closed loop control (p1300 = 21, 23) of induction motors with encoder.

Refer to: p3843

Notice: If the changeover point defined using p3844 does not match the changeover speed p1752, then internally, the model-controlled friction torque input is automatically deactivated (same as for p3844 = 0).

Note: For p3844 = 0, the model-controlled frictional torque changeover is deactivated. The frictional torque is then calculated the same as for the encoderless control by interpolating between the points along the friction characteristic.

p3845 Friction characteristic record activation / Frict rec act

VECTOR_G

Can be changed: T	**Calculated:** -	**Access level:** 2
Data type: Integer16	**Dynamic index:** -	**Func. diagram:** 7010
P-Group: Functions	**Units group:** -	**Unit selection:** -
Not for motor type: REL	**Scaling:** -	**Expert list:** 1
Min	**Max**	**Factory setting**
0	3	0

Description: Setting for the friction characteristic record.

After the next power-on command, the friction characteristic is automatically recorded.

Value:
0: Friction characteristic record de-activated
1: Friction char record activated for all directions
2: Friction char record activated for positive direction
3: Friction char record activated for negative direction

Dependency: When selecting the friction characteristic measurement, the drive data set changeover is suppressed.

For linear drives (refer to r0108 bit 12) it is not permissible to carry out the friction characteristic measurement for mechanical systems that limit travel.

Danger: For drives with a mechanical system that limit the distance moved, it must be ensured that during recording, the friction characteristic is not reached. If this is not the case, then it is not permissible that the measurement is carried out.

Notice: To permanently accept the determined settings they must be saved in a non-volatile fashion (p0971, p0977).

Note: When the friction characteristic record is active, it is not possible to save the parameters (p0971, p0977).

When the friction characteristic record is active (p3845 > 0), it is not possible to change p3820 ... p3829, p3830 ... p3839 and p3842.

When recording the friction characteristic, in addition to the friction, the motor losses are also determined (e.g. iron losses, eddy current losses and re-magnetizing losses). A differentiation is not made between these individual loss components. We recommend that a motor temperature sensor is used because torque deviations can also be emulated/mapped on the characteristic due to the thermal influence.

p3846[0...n] Friction characteristic record ramp-up/ramp-down time / Frict rec t_RFG

VECTOR_G (n/M)

Can be changed: T	**Calculated:** -	**Access level:** 2
Data type: FloatingPoint32	**Dynamic index:** DDS, p0180	**Func. diagram:** 7010
P-Group: Functions	**Units group:** -	**Unit selection:** -
Not for motor type: REL	**Scaling:** -	**Expert list:** 1
Min	**Max**	**Factory setting**
0.000 [s]	999999.000 [s]	10.000 [s]

Description: Sets the ramp-up/ramp-down time of the ramp-up/ramp-down function generator to automatically record the friction characteristic. The drive is accelerated from standstill (setpoint = 0) up to the maximum speed/velocity (p1082) in this time.

Dependency: Refer to: p3845

© Siemens AG 2012 All Rights Reserved

p3847[0...n] Friction characteristic record warm-up time / Frict rec t_warm

VECTOR_G (n/M)

Can be changed: T	**Calculated:** -	**Access level:** 2
Data type: FloatingPoint32	**Dynamic index:** DDS, p0180	**Func. diagram:** 7010
P-Group: Functions	**Units group:** -	**Unit selection:** -
Not for motor type: REL	**Scaling:** -	**Expert list:** 1
Min	**Max**	**Factory setting**
0.000 [s]	3600.000 [s]	0.000 [s]

Description: Sets the warm-up time.

For an automatic trace (record) to start, the highest selected speed (p3829) is approached and this time is held. After this, the measurement is started with the highest speed.

Dependency: Refer to: p3829, p3845

p3860 Number of Braking Modules connected in parallel / BM qty par_cct

B_INF (Brk Mod ext)

Can be changed: C2(2)	**Calculated:** -	**Access level:** 3
Data type: Unsigned8	**Dynamic index:** -	**Func. diagram:** 9951
P-Group: Converter	**Units group:** -	**Unit selection:** -
Not for motor type: -	**Scaling:** -	**Expert list:** 1
Min	**Max**	**Factory setting**
1	8	1

Description: Sets the number of Braking Modules connected in parallel in a DC link.

Note: The parameter can only be written to if the infeed is in the commissioning mode (p0010 = 2).

r3861.0...7 BO: Braking Module inhibit/acknowledgement / BM inhib/ackn

B_INF (Brk Mod ext)

Can be changed: -	**Calculated:** -	**Access level:** 3
Data type: Unsigned32	**Dynamic index:** -	**Func. diagram:** 9951
P-Group: Commands	**Units group:** -	**Unit selection:** -
Not for motor type: -	**Scaling:** -	**Expert list:** 1
Min	**Max**	**Factory setting**
-	-	-

Description: Signal to energize terminal X21.1 "inhibit/acknowledgement" on the Braking Module.

This binector output is used as signal source to interconnect to a digital output.

For "booksize" formats the digital output must be connected to terminal X21.1 and for "chassis" formats the digital output must be connected to terminal X21.3 of the particular Braking Module.

Bit field:

Bit	Signal name	1 signal	0 signal	FP
00	Inhibit/acknowledge Braking Module 1	High	Low	-
01	Inhibit/acknowledge Braking Module 2	High	Low	-
02	Inhibit/acknowledge Braking Module 3	High	Low	-
03	Inhibit/acknowledge Braking Module 4	High	Low	-
04	Inhibit/acknowledge Braking Module 5	High	Low	-
05	Inhibit/acknowledge Braking Module 6	High	Low	-
06	Inhibit/acknowledge Braking Module 7	High	Low	-
07	Inhibit/acknowledge Braking Module 8	High	Low	-

Warning: Check that binector outputs BO: r3861.n are connected correctly and that the appropriate digital outputs are wired correctly.

If the interconnection/wiring is incorrect, the software could execute a different (incorrect) function via binector outputs BO: r3861.n if the Braking Module develops a fault.

© Siemens AG 2012 All Rights Reserved

p3862 Braking Module DC link fast discharge delay time / BM DC-dischg t_del

B_INF (Brk Mod ext)

Can be changed: C1(3), T	**Calculated:** -	**Access level:** 3
Data type: Unsigned32	**Dynamic index:** -	**Func. diagram:** 9951
P-Group: Communications	**Units group:** -	**Unit selection:** -
Not for motor type: -	**Scaling:** -	**Expert list:** 1
Min	**Max**	**Factory setting**
500 [ms]	4294967295 [ms]	1000 [ms]

Description: Sets the delay time for switching in the DC link fast discharge.

Dependency: Refer to: p3863, r3864

Note: The DC link fast discharge is only possible for "booksize" formats. This function is not supported for "chassis" formats.

p3863 BI: Activating Braking Module DC link fast discharge / BM DC-dischg act

B_INF (Brk Mod ext)

Can be changed: T	**Calculated:** -	**Access level:** 3
Data type: Unsigned32 / Binary	**Dynamic index:** -	**Func. diagram:** 9951
P-Group: -	**Units group:** -	**Unit selection:** -
Not for motor type: -	**Scaling:** -	**Expert list:** 1
Min	**Max**	**Factory setting**
-	-	0

Description: Sets the signal source to activate the DC link fast discharge.

The DC link fast discharge is started later with delay time (p3862) when the following conditions apply:

- BI: p3863 = 1 signal.
- an external line contactor is opened via r0863.1 "energize contactor".

The DC link fast discharge is interrupted when the following conditions apply:

- BI: p3863 = 0 signal.
- ON command for the infeed.

Recommend.: The DC link fast discharge should be activated if there is an external line contactor and is correctly interconnected (r0863.1, p0860). If the DC link fast discharge is not activated together with an external line contactor, then faults could occur when pre-charging (e.g. F30027).

Dependency: Refer to: r3864

Refer to: F30027

Note: The DC link fast discharge is only possible for "booksize" formats. This function is not supported for "chassis" formats.

r3864.0...7 BO: Braking Module DC link fast discharge / BM DC link dischg

B_INF (Brk Mod ext)

Can be changed: -	**Calculated:** -	**Access level:** 3
Data type: Unsigned32	**Dynamic index:** -	**Func. diagram:** 9951
P-Group: Commands	**Units group:** -	**Unit selection:** -
Not for motor type: -	**Scaling:** -	**Expert list:** 1
Min	**Max**	**Factory setting**
-	-	-

Description: Signal to control (energize) terminal X21.2 "DC link fast discharge" on the Braking Module.

This binector output is used as signal source to interconnect to a digital output. The digital output must be connected to terminal X21.2 of the particular Braking Module.

Bit field:

Bit	Signal name	1 signal	0 signal	FP
00	Fast discharge Braking Module 1	High	Low	-
01	Fast discharge Braking Module 2	High	Low	-
02	Fast discharge Braking Module 3	High	Low	-
03	Fast discharge Braking Module 4	High	Low	-
04	Fast discharge Braking Module 5	High	Low	-
05	Fast discharge Braking Module 6	High	Low	-
06	Fast discharge Braking Module 7	High	Low	-
07	Fast discharge Braking Module 8	High	Low	-

© Siemens AG 2012 All Rights Reserved

Dependency: Refer to: p3863
Refer to: F30027

Warning: It must be carefully ensured that the binector outputs BO: p3864.n are correctly interconnected and also that the appropriate digital outputs are correctly connected up.
If the interconnection/connection is incorrect, in the case of an active DC link fast discharge, the software could execute another function (incorrect function) via binector outputs BO: p3864.n or could also permanently control the DC link fast discharge even if the line contactor is closed.

Note: The DC link fast discharge is only possible for "booksize" formats. This function is not supported for "chassis" formats.

p3865[0...7] BI: Braking Module pre-warning I*t shutdown / BM I*t shutdown

B_INF (Brk Mod ext)

Can be changed: T	**Calculated:** -	**Access level:** 3
Data type: Unsigned32 / Binary	**Dynamic index:** -	**Func. diagram:** 9951
P-Group: -	**Units group:** -	**Unit selection:** -
Not for motor type: -	**Scaling:** -	**Expert list:** 1
Min	**Max**	**Factory setting**
-	-	0

Description: Sets the signal source for the message "pre-alarm I*t shutdown" of the Braking Module.
BI: p3865[0...7] = 1 signal --> no pre-alarm, I*t shutdown
BI: p3865[0...7] = 0 signal --> pre-alarm I*t shutdown (A06901)

Dependency: Refer to: A06901

Note: For the Braking Module, this message is output via the following terminal:
- X21.4 for the "Booksize" format
This function is not supported for the "chassis" format.

p3866[0...7] BI: Braking Module fault / BM fault

B_INF (Brk Mod ext)

Can be changed: T	**Calculated:** -	**Access level:** 3
Data type: Unsigned32 / Binary	**Dynamic index:** -	**Func. diagram:** 9951
P-Group: -	**Units group:** -	**Unit selection:** -
Not for motor type: -	**Scaling:** -	**Expert list:** 1
Min	**Max**	**Factory setting**
-	-	0

Description: Sets the signal source for the "Fault" message of the Braking Module.
BI: p3866[0...7] = 1 signal --> No fault
BI: p3866[0...7] = 0 signal --> fault (A06900)
For a 0 signal, an acknowledgement via BO: r3861 is automatically carried out at certain time intervals.

Dependency: Refer to: A06900

Note: For the Braking Module, this message is output via the following terminal:
- X21.4 for the "Booksize" format
- X21.5 for the "Chassis" format

p3900 Completion of quick commissioning / Compl quick_comm

B_INF

Can be changed: C2(1)	**Calculated:** -	**Access level:** 1
Data type: Integer16	**Dynamic index:** -	**Func. diagram:** -
P-Group: -	**Units group:** -	**Unit selection:** -
Not for motor type: -	**Scaling:** -	**Expert list:** 1
Min	**Max**	**Factory setting**
0	3	0

Description: Exits the quick commissioning (p0010 = 1) with automatic calculation of all of the parameters that depend on the entries made during the quick commissioning.
p3900 = 1 initially includes a parameter reset (factory setting, the same as p0970 = 1) for all parameters of the drive object; however, without overwriting the entries made during the quick commissioning. The interconnections of PROFIBUS PZD telegram selection (p0922) and the interconnections via p0700 are re-established and all of the dependent filter and closed-loop control parameters are calculated (corresponding to p0340 = 1).

© Siemens AG 2012 All Rights Reserved

p3900 = 2 includes the restoration of the interconnections of PROFIBUS PZD telegram selection (p0922) and the interconnections via p0700 and the calculations corresponding to p0340 = 1.

p3900 = 3 only includes the end of quick commissioning.

Value:
0: No quick parameterization
1: Quick parameterization after parameter reset
2: Quick param. (only) for controller par. and reset for BICO par
3: Completion of quick commissioning

Notice: After the value has been modified, no further parameter modifications can be made and the status is shown in r3996. Modifications can be made again when r3996 = 0.

Note: When the calculations have been completed, p3900 and p0010 are automatically reset to a value of 0.

p3900 Completion of quick commissioning / Compl quick_comm

VECTOR_G

Can be changed: C2(1)	**Calculated:** -	**Access level:** 1
Data type: Integer16	**Dynamic index:** -	**Func. diagram:** -
P-Group: Displays, signals	**Units group:** -	**Unit selection:** -
Not for motor type: -	**Scaling:** -	**Expert list:** 1
Min	**Max**	**Factory setting**
0	3	0

Description: Exits quick commissioning (p0010 = 1) with automatic calculation of all parameters of all existing drive data sets that depend on the entries made during quick commissioning.

p3900 = 1 initially includes a parameter reset (factory setting, the same as p0970 = 1) for all parameters of the drive object; however, without overwriting the entries made during the quick commissioning.

The interconnections of PROFIBUS PZD telegram selection (p0922) and the interconnections via p0700, p1000 and p1500 are re-established and all of the dependent motor, open-loop and control-loop control parameters are calculated (corresponding to p0340 = 1).

p3900 = 2 includes the restoration of the interconnections of PROFIBUS PZD telegram selection (p0922) and the interconnections via p0700, p1000 and p1500 and the calculations corresponding to p0340 = 1.

p3900 = 3 only includes the calculations associated with the motor, open-loop and closed-loop control parameters corresponding to p0340 = 1.

Value:
0: No quick parameterization
1: Quick parameterization after parameter reset
2: Quick parameterization (only) for BICO and motor parameters
3: Quick parameterization for motor parameters (only)

Notice: After the value has been modified, no further parameter modifications can be made and the status is shown in r3996. Modifications can be made again when r3996 = 0.

Note: When the calculations have been completed, p3900 and p0010 are automatically reset to a value of 0.

When calculating motor, open-loop and closed-loop control parameters (such as for p0340 = 1) parameters associated with a selected Siemens catalog motor are not overwritten.

If a catalog motor has not been selected (see p0300), then the following parameters are reset with p3900 > 0 in order to restore the situation that applied when commissioning the drive for the first time:

induction motors p0320, p0352, p0353, p0362 ... p0369, p0391 ... p0393, p0604, p0605, p0626 ... p0628

synchronous motor p0326, p0327, p0352, p0353, p0391 ... p0393, p0604, p0605.

p3901[0...n] Power unit EEPROM Vdc offset calibration / PU EEPROM Vdc_offs

B_INF, VECTOR_G

Can be changed: C1, C2(1), T	**Calculated:** -	**Access level:** 3
Data type: FloatingPoint32	**Dynamic index:** PDS, p0120	**Func. diagram:** -
P-Group: -	**Units group:** -	**Unit selection:** -
Not for motor type: -	**Scaling:** -	**Expert list:** 1
Min	**Max**	**Factory setting**
-40.0 [V]	40.0 [V]	0.0 [V]

Description: Differential voltage for calibrating the offset for DC-link voltage measurement.

Dependency: Refer to: r0192, p0212

Caution: Incorrect use of the calibration can have a negative impact on the closed-loop control. The parameter influences the upper and lower voltage detection.

© Siemens AG 2012 All Rights Reserved

Note: Parameter entries are directly saved in the DRIVE-CLiQ component involved.
The parameter is only effective in the case of booksize power units if r0192 bit 22 and p0212 bit 0 are set.

r3925[0...n] Identification final display / Ident final_disp

VECTOR_G

Can be changed: -	**Calculated:** CALC_MOD_ALL	**Access level:** 3
Data type: Unsigned32	**Dynamic index:** DDS, p0180	**Func. diagram:** -
P-Group: Motor	**Units group:** -	**Unit selection:** -
Not for motor type: -	**Scaling:** -	**Expert list:** 1
Min	**Max**	**Factory setting**
-	-	-

Description: Displays the commissioning steps that have been carried out.

Bit field:

Bit	Signal name	1 signal	0 signal	FP
00	Motor/control parameters calculated (p0340 = 1, p3900 > 0)	Yes	No	-
02	Motor data identification carried out at standstill (p1910 = 1)	Yes	No	-
03	Rotating measurement carried out (p1960 = 1, 2)	Yes	No	-
04	Motor encoder adjustment carried out (p1960 = 1, p1990 = 1,3)	Yes	No	-
10	Automatic parameterization only for U/f control (r0108.2 = 0)	Yes	No	-
15	Motor equivalent circuit diagram parameters changed	Changed	Not changed	-

Note: The individual bits are only set if the appropriate action has been initiated and successfully completed.
When motor rating plate parameters are changed, the final display is reset.
When setting the individual bits, all of the most significant bits are reset.

r3927[0...n] Motor data identification control word / MotID STW

VECTOR_G

Can be changed: -	**Calculated:** CALC_MOD_ALL	**Access level:** 3
Data type: Unsigned32	**Dynamic index:** DDS, p0180	**Func. diagram:** -
P-Group: Motor identification	**Units group:** -	**Unit selection:** -
Not for motor type: -	**Scaling:** -	**Expert list:** 1
Min	**Max**	**Factory setting**
-	-	-

Description: Successfully completed component of the last motor data identification carried out.

Bit field:

Bit	Signal name	1 signal	0 signal	FP
00	Stator inductance estimate no measurement	Yes	No	-
01	Cl.-loop current control w/ dead-beat controller	Yes	No	-
02	Rotor time constant estimate no measurement	Yes	No	-
03	Leakage inductance estimate no measurement	Yes	No	-
04	Activates the identification dynamic leakage inductance	Yes	No	-
05	Determine Tr and Lsig evaluation in the time range	Yes	No	-
06	Activate vibration damping	Yes	No	-
07	De-activate vibration detection	Yes	No	-
11	De-activate pulse measurement Lq Ld	Yes	No	-
12	De-activate rotor resistance Rr measurement	Yes	No	-
14	De-activate valve interlocking time measurement	Yes	No	-

© Siemens AG 2012 All Rights Reserved

15	Determine only stator resistance, valve voltage fault, dead time	Yes	No	-
16	Short motor identification (lower quality)	Yes	No	-

Dependency: Refer to: r3925

Note: The parameter is a copy of p1909.

r3928[0...n] Rotating measurement configuration / Rot meas config

VECTOR_G (n/M)

Can be changed: - **Calculated:** CALC_MOD_ALL **Access level:** 3
Data type: Unsigned16 **Dynamic index:** DDS, p0180 **Func. diagram:** -
P-Group: Motor identification **Units group:** - **Unit selection:** -
Not for motor type: REL **Scaling:** - **Expert list:** 1

Min	Max	Factory setting
-	-	-

Description: Successfully completed component of the last rotating measurement carried out.

Bit field:

Bit	Signal name	1 signal	0 signal	FP
00	Enc test active	Yes	No	-
01	Saturation characteristic identification	Yes	No	-
02	Moment of inertia identification	Yes	No	-
03	Re-calculates the speed controller parameters	Yes	No	-
04	Speed controller optimization (vibration test)	Yes	No	-
05	q leakage inductance ident. (for current controller adaptation)	Yes	No	-
12	Measurement shortened	Yes	No	-

Dependency: Refer to: r3925

Note: The parameter is a copy of p1959.

p3950 Service parameter / Serv. par.

CU_G130_DP, CU_G130_PN, CU_G150_DP, CU_G150_PN

Can be changed: C1, U, T **Calculated:** - **Access level:** 3
Data type: Unsigned16 **Dynamic index:** - **Func. diagram:** -
P-Group: - **Units group:** - **Unit selection:** -
Not for motor type: - **Scaling:** - **Expert list:** 1

Min	Max	Factory setting
-	-	-

Description: For service personnel only.

r3974 Drive unit status word / Drv_unit ZSW

CU_G130_DP, CU_G130_PN, CU_G150_DP, CU_G150_PN

Can be changed: - **Calculated:** - **Access level:** 1
Data type: Unsigned32 **Dynamic index:** - **Func. diagram:** -
P-Group: - **Units group:** - **Unit selection:** -
Not for motor type: - **Scaling:** - **Expert list:** 1

Min	Max	Factory setting
-	-	-

Description: Displays the status word for the drive unit.

Bit field:

Bit	Signal name	1 signal	0 signal	FP
00	Software reset active	Yes	No	-
01	Writing of parameters disabled as parameter save in progress	Yes	No	-
02	Writing of parameters disabled as macro is running	Yes	No	-

© Siemens AG 2012 All Rights Reserved

r3977 BICO counter, topology / BICO counter topo

CU_G130_DP, CU_G130_PN, CU_G150_DP, CU_G150_PN	**Can be changed:** -	**Calculated:** -	**Access level:** 4
	Data type: Unsigned32	**Dynamic index:** -	**Func. diagram:** -
	P-Group: Commands	**Units group:** -	**Unit selection:** -
	Not for motor type: -	**Scaling:** -	**Expert list:** 1
	Min	**Max**	**Factory setting**
	-	-	-

Description: Displays the BICO interconnections that have been parameterized in the complete (overall) topology.
The counter is incremented by one for each modified BICO interconnection.

Dependency: Refer to: r3978, r3979

r3978 BICO CounterDevice / BICO CounterDevice

CU_G130_DP, CU_G130_PN, CU_G150_DP, CU_G150_PN	**Can be changed:** -	**Calculated:** -	**Access level:** 4
	Data type: Unsigned32	**Dynamic index:** -	**Func. diagram:** -
	P-Group: Commands	**Units group:** -	**Unit selection:** -
	Not for motor type: -	**Scaling:** -	**Expert list:** 1
	Min	**Max**	**Factory setting**
	-	-	-

Description: Displays the counter reading for modified BICO interconnections on this device.
The counter is incremented by one for each modified BICO interconnection.

r3979 BICO counter, drive object / BICO counter DO

B_INF, ENC, HUB, TB30, TM150, TM31, TM54F_MA, TM54F_SL, VECTOR_G	**Can be changed:** -	**Calculated:** -	**Access level:** 4
	Data type: Unsigned32	**Dynamic index:** -	**Func. diagram:** -
	P-Group: Commands	**Units group:** -	**Unit selection:** -
	Not for motor type: -	**Scaling:** -	**Expert list:** 1
	Min	**Max**	**Factory setting**
	-	-	-

Description: Displays the counter reading for modified BICO interconnections on this drive object.
The counter is incremented by one for each modified BICO interconnection.

p3981 Faults, acknowledge drive object / Faults ackn DO

All objects	**Can be changed:** U, T	**Calculated:** -	**Access level:** 2
	Data type: Unsigned8	**Dynamic index:** -	**Func. diagram:** 8060
	P-Group: Messages	**Units group:** -	**Unit selection:** -
	Not for motor type: -	**Scaling:** -	**Expert list:** 1
	Min	**Max**	**Factory setting**
	0	1	0

Description: Setting to acknowledge all active faults of a drive object.

Notice: Safety messages cannot be acknowledged using this parameter.

Note: Parameter should be set from 0 to 1 to acknowledge.
After acknowledgement, the parameter is automatically reset to 0.

p3985 Master control mode selection / PcCtrl mode select

B_INF, VECTOR_G	**Can be changed:** U, T	**Calculated:** -	**Access level:** 3
	Data type: Integer16	**Dynamic index:** -	**Func. diagram:** -
	P-Group: Setpoints	**Units group:** -	**Unit selection:** -
	Not for motor type: -	**Scaling:** -	**Expert list:** 1
	Min	**Max**	**Factory setting**
	0	1	0

Description: Sets the mode to change over the master control / LOCAL mode.

© Siemens AG 2012 All Rights Reserved

Value:
0: Change master control for STW1.0 = 0
1: Change master control in operation

Danger:
When changing the master control in operation, the drive can manifest undesirable behavior - e.g. it can accelerate up to another setpoint.

r3986 Parameter count / Parameter No.

All objects	**Can be changed:** -	**Calculated:** -	**Access level:** 3
	Data type: Unsigned16	**Dynamic index:** -	**Func. diagram:** -
	P-Group: -	**Units group:** -	**Unit selection:** -
	Not for motor type: -	**Scaling:** -	**Expert list:** 1
	Min	**Max**	**Factory setting**
	-	-	-

Description:
Displays the number of parameters for this drive unit.
The number comprises the device-specific and the drive-specific parameters.

Dependency:
Refer to: r0980, r0981, r0989

r3988[0...1] Boot state / Boot_state

CU_G130_DP, CU_G130_PN, CU_G150_DP, CU_G150_PN	**Can be changed:** -	**Calculated:** -	**Access level:** 3
	Data type: Integer16	**Dynamic index:** -	**Func. diagram:** -
	P-Group: -	**Units group:** -	**Unit selection:** -
	Not for motor type: -	**Scaling:** -	**Expert list:** 1
	Min	**Max**	**Factory setting**
	0	10800	-

Description:
Index 0:
Displays the boot state.
Index 1:
Displays the partial boot state

Value:
0: Not active
1: Fatal fault
10: Fault
20: Reset all parameters
30: Drive object modified
40: Download using commissioning software
50: Parameter download using commissioning software
90: Reset Control Unit and delete drive objects
100: Start initialization
101: Wait for topology input
110: Instantiate Control Unit basis
111: Insert drive object
112: Remove drive object
113: Change drive object number
114: Change component number
115: Parameter download using commissioning software
117: Remove component
150: Wait until actual topology determined
160: Evaluate topology
170: Instantiate Control Unit reset
180: Initialization YDB configuration information
200: First commissioning
210: Create drive packages
250: Wait for topology acknowledge
325: Wait for input of drive type
350: Determine drive type
360: Write into topology-dependent parameters
370: Wait until p0009 = 0 is set
380: Check topology

© Siemens AG 2012 All Rights Reserved

550: Call conversion functions for parameter
625: Wait non-cyclic starting DRIVE-CLiQ
650: Start cyclic operation
660: Evaluate drive commissioning status
670: Autom. FW update DRIVE-CLiQ components
680: Wait for CU LINK slaves
690: Wait non-cyclic starting DRIVE-CLiQ
700: Save parameters
725: Wait until DRIVE-CLiQ cyclic
740: Check the ability to operate
745: Start of the time slices
750: Interrupt enable
800: Initialization finished
10050: Wait for synchronization
10100: Wait for CU LINK slaves
10150: Wait until actual topology determined
10200: Evaluation component status
10250: Call conversion functions for parameter
10300: Preparation cyclic operation
10350: Autom. FW update DRIVE-CLiQ components
10400: Wait for slave properties
10450: Check CX/NX status
10500: Wait until DRIVE-CLiQ cyclic
10550: Carry out warm start
10600: Evaluate, encoder status
10800: Partial boot completed

Index: [0] = System
[1] = Partial boot

r3996[0...1] Parameter write inhibit status / Par_write inhib st

All objects

Can be changed: -	**Calculated:** -	**Access level:** 1
Data type: Unsigned8	**Dynamic index:** -	**Func. diagram:** -
P-Group: -	**Units group:** -	**Unit selection:** -
Not for motor type: -	**Scaling:** -	**Expert list:** 1
Min	**Max**	**Factory setting**
-	-	-

Description: Displays whether writing to parameters is inhibited.
r3996[0] = 0:
Parameter write not inhibited.
0 < r3996[0] < 100:
Parameter write inhibited. The value shows how the calculations are progressing.

Index: [0] = Progress calculations
[1] = Cause

Note: Re index 1:
Only for internal Siemens troubleshooting.

r3998 First infeed commissioning / First inf_comm

B_INF

Can be changed: -	**Calculated:** -	**Access level:** 3
Data type: Unsigned16	**Dynamic index:** -	**Func. diagram:** -
P-Group: -	**Units group:** -	**Unit selection:** -
Not for motor type: -	**Scaling:** -	**Expert list:** 1
Min	**Max**	**Factory setting**
0	65535	-

Description: Displays whether the infeed must be commissioned for the first time.
0 = Yes
2 = No

© Siemens AG 2012 All Rights Reserved

r3998[0...n] First drive commissioning / First drv_comm

VECTOR_G

Can be changed: -	**Calculated:** -	**Access level:** 3
Data type: Unsigned16	**Dynamic index:** DDS, p0180	**Func. diagram:** -
P-Group: -	**Units group:** -	**Unit selection:** -
Not for motor type: -	**Scaling:** -	**Expert list:** 1
Min	**Max**	**Factory setting**
0	65535	-

Description: Displays whether the drive still has to be commissioned for the first time.
0 = Yes
2 = No

r4021 TB30 digital inputs terminal actual value / TB30 DI act value

TB30

Can be changed: -	**Calculated:** -	**Access level:** 2
Data type: Unsigned32	**Dynamic index:** -	**Func. diagram:** 9100
P-Group: Commands	**Units group:** -	**Unit selection:** -
Not for motor type: -	**Scaling:** -	**Expert list:** 1
Min	**Max**	**Factory setting**
-	-	-

Description: Displays the actual value at the digital inputs.
This means that the actual input signal can be checked at terminal DI x prior to switching from the simulation mode (p4095.x = 1) to the terminal mode (p4095.x = 0).

Bit field:

Bit	Signal name	1 signal	0 signal	FP
00	DI 0 (X481.1)	High	Low	-
01	DI 1 (X481.2)	High	Low	-
02	DI 2 (X481.3)	High	Low	-
03	DI 3 (X481.4)	High	Low	-

Note: DI: Digital Input

r4021 TM31 digital inputs terminal actual value / TM31 DI act value

TM31

Can be changed: -	**Calculated:** -	**Access level:** 2
Data type: Unsigned32	**Dynamic index:** -	**Func. diagram:** 1840, 9550, 9552, 9560, 9562
P-Group: Commands	**Units group:** -	**Unit selection:** -
Not for motor type: -	**Scaling:** -	**Expert list:** 1
Min	**Max**	**Factory setting**
-	-	-

Description: Displays the actual value at the digital inputs.
This means that the actual input signal can be checked at terminal DI x or DI/DO x prior to switching from the simulation mode (p4095.x = 1) to terminal mode (p4095.x = 0).

Bit field:

Bit	Signal name	1 signal	0 signal	FP
00	DI 0 (X520.1)	High	Low	-
01	DI 1 (X520.2)	High	Low	-
02	DI 2 (X520.3)	High	Low	-
03	DI 3 (X520.4)	High	Low	-
04	DI 4 (X530.1)	High	Low	-
05	DI 5 (X530.2)	High	Low	-
06	DI 6 (X530.3)	High	Low	-
07	DI 7 (X530.4)	High	Low	-
08	DI/DO 8 (X541.2)	High	Low	-
09	DI/DO 9 (X541.3)	High	Low	-
10	DI/DO 10 (X541.4)	High	Low	-
11	DI/DO 11 (X541.5)	High	Low	-

© Siemens AG 2012 All Rights Reserved

Note: If a DI/DO is parameterized as output (p4028.x = 1), then r4021.x = 0 is displayed.
DI: Digital Input
DI/DO: Bidirectional Digital Input/Output

r4022.0...3 CO/BO: TB30 digital inputs, status / TB30 DI status

TB30

Can be changed: -	**Calculated:** -	**Access level:** 1
Data type: Unsigned32	**Dynamic index:** -	**Func. diagram:** 1790, 9100
P-Group: Commands	**Units group:** -	**Unit selection:** -
Not for motor type: -	**Scaling:** -	**Expert list:** 1
Min	**Max**	**Factory setting**
-	-	-

Description: Displays the status of the digital inputs of the Terminal Board 30 (TB30).

Bit field:

Bit	Signal name	1 signal	0 signal	FP
00	DI 0 (X481.1)	High	Low	-
01	DI 1 (X481.2)	High	Low	-
02	DI 2 (X481.3)	High	Low	-
03	DI 3 (X481.4)	High	Low	-

Dependency: Refer to: r4023

Note: DI: Digital Input

r4022.0...11 CO/BO: TM31 digital inputs, status / TM31 DI status

TM31

Can be changed: -	**Calculated:** -	**Access level:** 1
Data type: Unsigned32	**Dynamic index:** -	**Func. diagram:** 1840, 9550, 9552, 9560, 9562
P-Group: Commands	**Units group:** -	**Unit selection:** -
Not for motor type: -	**Scaling:** -	**Expert list:** 1
Min	**Max**	**Factory setting**
-	-	-

Description: Displays the status of the digital inputs of Terminal Module 31 (TM31).

Bit field:

Bit	Signal name	1 signal	0 signal	FP
00	DI 0 (X520.1)	High	Low	-
01	DI 1 (X520.2)	High	Low	-
02	DI 2 (X520.3)	High	Low	-
03	DI 3 (X520.4)	High	Low	-
04	DI 4 (X530.1)	High	Low	-
05	DI 5 (X530.2)	High	Low	-
06	DI 6 (X530.3)	High	Low	-
07	DI 7 (X530.4)	High	Low	-
08	DI/DO 8 (X541.2)	High	Low	-
09	DI/DO 9 (X541.3)	High	Low	-
10	DI/DO 10 (X541.4)	High	Low	-
11	DI/DO 11 (X541.5)	High	Low	-

Dependency: Refer to: r4023

Note: DI: Digital Input
DI/DO: Bidirectional Digital Input/Output

r4023.0...3 BO: TB30 digital inputs, status inverted / TB30 DI status inv

TB30

Can be changed: -	**Calculated:** -	**Access level:** 1
Data type: Unsigned32	**Dynamic index:** -	**Func. diagram:** 1790, 9100
P-Group: Commands	**Units group:** -	**Unit selection:** -
Not for motor type: -	**Scaling:** -	**Expert list:** 1
Min	**Max**	**Factory setting**
-	-	-

Description: Displays the inverted status of the digital inputs of the Terminal Board 30 (TB30).

© Siemens AG 2012 All Rights Reserved

Bit field:

Bit	Signal name	1 signal	0 signal	FP
00	DI 0 (X481.1)	High	Low	-
01	DI 1 (X481.2)	High	Low	-
02	DI 2 (X481.3)	High	Low	-
03	DI 3 (X481.4)	High	Low	-

Dependency: Refer to: r4022

Note: DI: Digital Input

r4023.0...11 CO/BO: TM31 digital inputs, status inverted / TM31 DI status inv

TM31

Can be changed: - **Calculated:** - **Access level:** 1

Data type: Unsigned32 **Dynamic index:** - **Func. diagram:** 1840, 9550, 9552, 9560, 9562

P-Group: Commands **Units group:** - **Unit selection:** -

Not for motor type: - **Scaling:** - **Expert list:** 1

Min	Max	Factory setting
-	-	-

Description: Displays the inverted status of the digital inputs of Terminal Module 31 (TM31).

Bit field:

Bit	Signal name	1 signal	0 signal	FP
00	DI 0 (X520.1)	High	Low	-
01	DI 1 (X520.2)	High	Low	-
02	DI 2 (X520.3)	High	Low	-
03	DI 3 (X520.4)	High	Low	-
04	DI 4 (X530.1)	High	Low	-
05	DI 5 (X530.2)	High	Low	-
06	DI 6 (X530.3)	High	Low	-
07	DI 7 (X530.4)	High	Low	-
08	DI/DO 8 (X541.2)	High	Low	-
09	DI/DO 9 (X541.3)	High	Low	-
10	DI/DO 10 (X541.4)	High	Low	-
11	DI/DO 11 (X541.5)	High	Low	-

Dependency: Refer to: r4022

Note: DI: Digital Input
DI/DO: Bidirectional Digital Input/Output

p4028 TM31 set input or output / TM31 DI or DO

TM31

Can be changed: T **Calculated:** - **Access level:** 1

Data type: Unsigned32 **Dynamic index:** - **Func. diagram:** 1840, 9560, 9562

P-Group: Commands **Units group:** - **Unit selection:** -

Not for motor type: - **Scaling:** - **Expert list:** 1

Min	Max	Factory setting
-	-	0000 0000 0000 0000 bin

Description: Sets the bidirectional digital inputs/outputs as input or output on the Terminal Module 31 (TM31).

Bit field:

Bit	Signal name	1 signal	0 signal	FP
08	DI/DO 8 (X541.2)	Output	Input	-
09	DI/DO 9 (X541.3)	Output	Input	-
10	DI/DO 10 (X541.4)	Output	Input	-
11	DI/DO 11 (X541.5)	Output	Input	-

Note: DI/DO: Bidirectional Digital Input/Output

© Siemens AG 2012 All Rights Reserved

p4030 BI: TB30 signal source for terminal DO 0 / TB30 S_src DO 0

TB30

Can be changed: U, T	**Calculated:** -	**Access level:** 1
Data type: Unsigned32 / Binary	**Dynamic index:** -	**Func. diagram:** 1790, 9102
P-Group: Commands	**Units group:** -	**Unit selection:** -
Not for motor type: -	**Scaling:** -	**Expert list:** 1
Min	**Max**	**Factory setting**
-	-	0

Description: Sets the signal source for digital output DO 0 (X481.5) of the Terminal Board 30 (TB30).

Note: DO: Digital Output

p4030 BI: TM31 signal source for terminal DO 0 / TM31 S_src DO 0

TM31

Can be changed: U, T	**Calculated:** -	**Access level:** 1
Data type: Unsigned32 / Binary	**Dynamic index:** -	**Func. diagram:** 1840, 9556
P-Group: Commands	**Units group:** -	**Unit selection:** -
Not for motor type: -	**Scaling:** -	**Expert list:** 1
Min	**Max**	**Factory setting**
-	-	0

Description: Sets the signal source for the digital output DO 0 (X542.1, X542.2, X542.3) of Terminal Module 31 (TM31).
Digital output 0 of TM31 is a relay output.
If the signal at the binector input p4030 is low, then terminal COM 0 (X542.2) is connected to NC 0 (X542.1). This connection also matches the mechanical quiescent setting of the relay.
If the signal at the binector input p4030 is high, then terminal COM 0 (X542.2) is connected to NO 0 (X542.3).

Note: DO: Digital Output
NC: Normally Closed contact
NO: Normally Open contact

p4031 BI: TB30 signal source for terminal DO 1 / TB30 S_src DO 1

TB30

Can be changed: U, T	**Calculated:** -	**Access level:** 1
Data type: Unsigned32 / Binary	**Dynamic index:** -	**Func. diagram:** 9102
P-Group: Commands	**Units group:** -	**Unit selection:** -
Not for motor type: -	**Scaling:** -	**Expert list:** 1
Min	**Max**	**Factory setting**
-	-	0

Description: Sets the signal source for terminal DO 1 (X481.6) of the Terminal Board 30 (TB30).

Note: DO: Digital Output

p4031 BI: TM31 signal source for terminal DO 1 / TM31 S_src DO 1

TM31

Can be changed: U, T	**Calculated:** -	**Access level:** 1
Data type: Unsigned32 / Binary	**Dynamic index:** -	**Func. diagram:** 1840, 9556
P-Group: Commands	**Units group:** -	**Unit selection:** -
Not for motor type: -	**Scaling:** -	**Expert list:** 1
Min	**Max**	**Factory setting**
-	-	0

Description: Sets the signal source for the digital output DO 1 (X542.4, X542.5, X542.6) of Terminal Module 31 (TM31).
Digital output 1 of TM31 is a relay output.
If the signal at the binector input p4031 is low, then terminal COM 1 (X542.5) is connected to NC 1 (X542.4). This connection also matches the mechanical quiescent setting of the relay.
If the signal at the binector input p4031 is high, then terminal COM 1 (X542.5) is connected to NO 1 (X542.6).

Note: DO: Digital Output
NC: Normally Closed contact
NO: Normally Open contact

© Siemens AG 2012 All Rights Reserved

p4032 BI: TB30 signal source for terminal DO 2 / TB30 S_src DO 2

TB30	**Can be changed:** U, T	**Calculated:** -	**Access level:** 1
	Data type: Unsigned32 / Binary	**Dynamic index:** -	**Func. diagram:** 9102
	P-Group: Commands	**Units group:** -	**Unit selection:** -
	Not for motor type: -	**Scaling:** -	**Expert list:** 1
	Min	**Max**	**Factory setting**
	-	-	0

Description: Sets the signal source for terminal DO 2 (X481.7) of the Terminal Board 30 (TB30).

Note: DO: Digital Output

p4033 BI: TB30 signal source for terminal DO 3 / TB30 S_src DO 3

TB30	**Can be changed:** U, T	**Calculated:** -	**Access level:** 1
	Data type: Unsigned32 / Binary	**Dynamic index:** -	**Func. diagram:** 1790, 9102
	P-Group: Commands	**Units group:** -	**Unit selection:** -
	Not for motor type: -	**Scaling:** -	**Expert list:** 1
	Min	**Max**	**Factory setting**
	-	-	0

Description: Sets the signal source for terminal DO 3 (X481.8) of the Terminal Board 30 (TB30).

Note: DO: Digital Output

p4038 BI: TM31 signal source for terminal DI/DO 8 / TM31 S_src DI/DO8

TM31	**Can be changed:** U, T	**Calculated:** -	**Access level:** 1
	Data type: Unsigned32 / Binary	**Dynamic index:** -	**Func. diagram:** 1840, 9560
	P-Group: Commands	**Units group:** -	**Unit selection:** -
	Not for motor type: -	**Scaling:** -	**Expert list:** 1
	Min	**Max**	**Factory setting**
	-	-	0

Description: Sets the signal source for terminal DI/DO 8 (X541.2) of Terminal Module 31 (TM31).

Note: Prerequisite: The DI/DO must be set as an output (p4028.8 = 1).
DI/DO: Bidirectional Digital Input/Output

p4039 BI: TM31 signal source for terminal DI/DO 9 / TM31 S_src DI/DO9

TM31	**Can be changed:** U, T	**Calculated:** -	**Access level:** 1
	Data type: Unsigned32 / Binary	**Dynamic index:** -	**Func. diagram:** 9560
	P-Group: Commands	**Units group:** -	**Unit selection:** -
	Not for motor type: -	**Scaling:** -	**Expert list:** 1
	Min	**Max**	**Factory setting**
	-	-	0

Description: Sets the signal source for terminal DI/DO 9 (X541.3) of Terminal Module 31 (TM31).

Note: Prerequisite: The DI/DO must be set as an output (p4028.9 = 1).
DI/DO: Bidirectional Digital Input/Output

p4040 BI: TM31 signal source for terminal DI/DO 10 / TM31 S_srcDI/DO10

TM31	**Can be changed:** U, T	**Calculated:** -	**Access level:** 1
	Data type: Unsigned32 / Binary	**Dynamic index:** -	**Func. diagram:** 9562
	P-Group: Commands	**Units group:** -	**Unit selection:** -
	Not for motor type: -	**Scaling:** -	**Expert list:** 1
	Min	**Max**	**Factory setting**
	-	-	0

Description: Sets the signal source for terminal DI/DO 10 (X541.4) of Terminal Module 31 (TM31).

© Siemens AG 2012 All Rights Reserved

Note: Prerequisite: The DI/DO must be set as an output (p4028.10 = 1).
DI/DO: Bidirectional Digital Input/Output

p4041 BI: TM31 signal source for terminal DI/DO 11 / TM31 S_src DI/DO11

TM31

Can be changed: U, T	**Calculated:** -	**Access level:** 1
Data type: Unsigned32 / Binary	**Dynamic index:** -	**Func. diagram:** 1840, 9562
P-Group: Commands	**Units group:** -	**Unit selection:** -
Not for motor type: -	**Scaling:** -	**Expert list:** 1
Min	**Max**	**Factory setting**
-	-	0

Description: Sets the signal source for terminal DI/DO 11 (X541.5) of Terminal Module 31 (TM31).

Note: Prerequisite: The DI/DO must be set as an output (p4028.11 = 1).
DI/DO: Bidirectional Digital Input/Output

p4046 TM31 digital outputs, limit current / TM31 DO limit curr

TM31

Can be changed: T	**Calculated:** -	**Access level:** 2
Data type: Integer16	**Dynamic index:** -	**Func. diagram:** 9560
P-Group: Commands	**Units group:** -	**Unit selection:** -
Not for motor type: -	**Scaling:** -	**Expert list:** 1
Min	**Max**	**Factory setting**
0	1	0

Description: Sets the limit for the total output voltage of terminals X541.1, X541.2, X541.3 and X541.4 (DI/DO 8 ... 11) of Terminal Module 31 (TM31).

Value:
0: 0.1 A total current limit DI/DO 8 ... 11
1: 1.0 A total current limit DI/DO 8 ... 11

Dependency: Refer to: p4028

Warning: Since the sum of the output currents at terminals X541.1, X541.2, X541.3 and X541.4 is limited, an overcurrent or short circuit at one output terminal can cause a dip in the signal at the other terminals.

r4047 TB30 digital outputs status / TB30 DO status

TB30

Can be changed: -	**Calculated:** -	**Access level:** 1
Data type: Unsigned32	**Dynamic index:** -	**Func. diagram:** 9102
P-Group: Commands	**Units group:** -	**Unit selection:** -
Not for motor type: -	**Scaling:** -	**Expert list:** 1
Min	**Max**	**Factory setting**
-	-	-

Description: Displays the status of the digital outputs of the Terminal Board 30 (TB30).

Bit field:

Bit	Signal name	1 signal	0 signal	FP
00	DO 0 (X481.5)	High	Low	-
01	DO 1 (X481.6)	High	Low	-
02	DO 2 (X481.7)	High	Low	-
03	DO 3 (X481.8)	High	Low	-

Note: Inversion using p4048 has been taken into account.
DO: Digital Output

© Siemens AG 2012 All Rights Reserved

r4047 TM31 digital outputs status / TM31 DO status

TM31

Can be changed: - **Calculated:** - **Access level:** 1
Data type: Unsigned32 **Dynamic index:** - **Func. diagram:** 9556, 9560, 9562
P-Group: Commands **Units group:** - **Unit selection:** -
Not for motor type: - **Scaling:** - **Expert list:** 1

Min	Max	Factory setting
-	-	-

Description: Displays the status of the digital outputs of Terminal Module 31 (TM31).

Bit field:

Bit	Signal name	1 signal	0 signal	FP
00	DO 0 (X542.1 - 3)	High	Low	-
01	DO 1 (X542.4 - 6)	High	Low	-
08	DI/DO 8 (X541.2)	High	Low	-
09	DI/DO 9 (X541.3)	High	Low	-
10	DI/DO 10 (X541.4)	High	Low	-
11	DI/DO 11 (X541.5)	High	Low	-

Note: Inversion using p4048 has been taken into account.
The setting of the DI/DO as either input or output is of no significance (p4028).
DO: Digital Output
DI/DO: Bidirectional Digital Input/Output

p4048 TB30 invert digital outputs / TB30 DO inv

TB30

Can be changed: U, T **Calculated:** - **Access level:** 1
Data type: Unsigned32 **Dynamic index:** - **Func. diagram:** 9102
P-Group: Commands **Units group:** - **Unit selection:** -
Not for motor type: - **Scaling:** - **Expert list:** 1

Min	Max	Factory setting
-	-	0000 bin

Description: Setting to invert the signals at the digital outputs of the Terminal Board 30 (TB30).

Bit field:

Bit	Signal name	1 signal	0 signal	FP
00	DO 0 (X481.5)	Inverted	Not inverted	-
01	DO 1 (X481.6)	Inverted	Not inverted	-
02	DO 2 (X481.7)	Inverted	Not inverted	-
03	DO 3 (X481.8)	Inverted	Not inverted	-

Note: DO: Digital Output

p4048 TM31 invert digital outputs / TM31 DO inv

TM31

Can be changed: U, T **Calculated:** - **Access level:** 1
Data type: Unsigned32 **Dynamic index:** - **Func. diagram:** 9556, 9560, 9562
P-Group: Commands **Units group:** - **Unit selection:** -
Not for motor type: - **Scaling:** - **Expert list:** 1

Min	Max	Factory setting
-	-	0000 0000 0000 0000 bin

Description: Setting to invert the signals at the digital outputs of Terminal Module 31 (TM31).

Bit field:

Bit	Signal name	1 signal	0 signal	FP
00	DO 0 (X542.1 - 3)	Inverted	Not inverted	-
01	DO 1 (X542.4 - 6)	Inverted	Not inverted	-
08	DI/DO 8 (X541.2)	Inverted	Not inverted	-
09	DI/DO 9 (X541.3)	Inverted	Not inverted	-
10	DI/DO 10 (X541.4)	Inverted	Not inverted	-
11	DI/DO 11 (X541.5)	Inverted	Not inverted	-

Note: DO: Digital Output
DI/DO: Bidirectional Digital Input/Output

© Siemens AG 2012 All Rights Reserved

r4052[0...1] CO: TB30 analog inputs, actual input voltage / TB30 AI U_inp act

TB30

Can be changed: -	**Calculated:** -	**Access level:** 1
Data type: FloatingPoint32	**Dynamic index:** -	**Func. diagram:** 9104
P-Group: Terminals	**Units group:** -	**Unit selection:** -
Not for motor type: -	**Scaling:** -	**Expert list:** 1
Min	**Max**	**Factory setting**
- [V]	- [V]	- [V]

Description: Displays the actual input voltage at the analog inputs for Terminal Board 30 (TB30).
Note:
For p4056[x] = 3 (unipolar current input monitored (+4 mA ... +20 mA)) the following applies:
A current less than 4 mA is not displayed in r4052[x] - but instead r4052[x] = 4 mA is output.

Index: [0] = AI 0 (X482.1/X482.2)
[1] = AI 1 (X482.3/X482.4)

Note: AI: Analog Input

r4052[0...1] CO: TM31 analog inputs, current input voltage/current / TM31 AI U/I_inp

TM31

Can be changed: -	**Calculated:** -	**Access level:** 1
Data type: FloatingPoint32	**Dynamic index:** -	**Func. diagram:** 9566, 9568
P-Group: Terminals	**Units group:** -	**Unit selection:** -
Not for motor type: -	**Scaling:** -	**Expert list:** 1
Min	**Max**	**Factory setting**
-	-	-

Description: Displays the actual input voltage in V when set as voltage input.
Displays the actual input current in mA when set as current input and with the load resistor switched in.

Index: [0] = AI 0 (X521.1/X521.2, S5.0)
[1] = AI 1 (X521.3/X521.4, S5.1)

Dependency: The type of analog input AI x (voltage or current input) is set using p4056.
Refer to: r4056, p4056

Note: AI: Analog Input

p4053[0...1] TB30 analog inputs, smoothing time constant / TB30 AI T_smooth

TB30

Can be changed: U, T	**Calculated:** -	**Access level:** 1
Data type: FloatingPoint32	**Dynamic index:** -	**Func. diagram:** 9104
P-Group: Terminals	**Units group:** -	**Unit selection:** -
Not for motor type: -	**Scaling:** -	**Expert list:** 1
Min	**Max**	**Factory setting**
0.0 [ms]	1000.0 [ms]	0.0 [ms]

Description: Sets the smoothing time constant of the 1st-order low pass filter for the analog inputs of the Terminal Board 30 (TB30).

Index: [0] = AI 0 (X482.1/X482.2)
[1] = AI 1 (X482.3/X482.4)

Note: AI: Analog Input

p4053[0...1] TM31 analog inputs, smoothing time constant / TM31 AI T_smooth

TM31

Can be changed: U, T	**Calculated:** -	**Access level:** 1
Data type: FloatingPoint32	**Dynamic index:** -	**Func. diagram:** 9566, 9568
P-Group: Terminals	**Units group:** -	**Unit selection:** -
Not for motor type: -	**Scaling:** -	**Expert list:** 1
Min	**Max**	**Factory setting**
0.0 [ms]	1000.0 [ms]	0.0 [ms]

Description: Sets the smoothing time constant of the 1st-order low pass filter for the analog inputs of Terminal Module 31 (TM31).

© Siemens AG 2012 All Rights Reserved

Index: [0] = AI 0 (X521.1/X521.2, S5.0)
[1] = AI 1 (X521.3/X521.4, S5.1)

Note: AI: Analog Input

r4055[0...1] CO: TB30 analog inputs, actual value in percent / TB30 AI value in %

TB30

Can be changed: -	**Calculated:** -	**Access level:** 1
Data type: FloatingPoint32	**Dynamic index:** -	**Func. diagram:** 1790, 9104
P-Group: Terminals	**Units group:** -	**Unit selection:** -
Not for motor type: -	**Scaling:** PERCENT	**Expert list:** 1
Min	**Max**	**Factory setting**
- [%]	- [%]	- [%]

Description: Displays the currently referred input value of the analog inputs of Terminal Board 30 (TB30).
When interconnected, the signals are referred to the reference quantities p200x and p205x.

Index: [0] = AI 0 (X482.1/X482.2)
[1] = AI 1 (X482.3/X482.4)

Note: AI: Analog Input

r4055[0...1] CO: TM31 analog inputs, actual value in percent / TM31 AI value in %

TM31

Can be changed: -	**Calculated:** -	**Access level:** 1
Data type: FloatingPoint32	**Dynamic index:** -	**Func. diagram:** 1840, 9566, 9568
P-Group: Terminals	**Units group:** -	**Unit selection:** -
Not for motor type: -	**Scaling:** PERCENT	**Expert list:** 1
Min	**Max**	**Factory setting**
- [%]	- [%]	- [%]

Description: Displays the currently referred input value of the analog inputs of Terminal Module 31 (TM31).
When interconnected, the signals are referred to the reference quantities p200x and p205x.

Index: [0] = AI 0 (X521.1/X521.2, S5.0)
[1] = AI 1 (X521.3/X521.4, S5.1)

Note: AI: Analog Input

r4056[0...1] TB30 analog inputs, type / TB30 AI type

TB30

Can be changed: -	**Calculated:** -	**Access level:** 1
Data type: Integer16	**Dynamic index:** -	**Func. diagram:** -
P-Group: Terminals	**Units group:** -	**Unit selection:** -
Not for motor type: -	**Scaling:** -	**Expert list:** 1
Min	**Max**	**Factory setting**
4	4	-

Description: Displays the type of analog inputs.

Value: 4: Bipolar voltage input (-10 V ... +10 V)

Index: [0] = AI 0 (X482.1/X482.2)
[1] = AI 1 (X482.3/X482.4)

p4056[0...1] TM31 analog inputs, type / TM31 AI type

TM31

Can be changed: U, T	**Calculated:** -	**Access level:** 1
Data type: Integer16	**Dynamic index:** -	**Func. diagram:** 9566, 9568
P-Group: Terminals	**Units group:** -	**Unit selection:** -
Not for motor type: -	**Scaling:** -	**Expert list:** 1
Min	**Max**	**Factory setting**
0	5	4

Description: Sets the type of analog inputs of Terminal Module 31 (TM31).
p4056[x] = 0, 4 correspond to a voltage input (r4052, p4057, p4059 are displayed in V).
p4056[x] = 2, 3, 5 correspond to a current input (r4052, p4057, p4059 are displayed in mA).

© Siemens AG 2012 All Rights Reserved

In addition, the associated switch S5 must be appropriately set.

AI 0: S5.0 = V --> voltage input, S5.0 = I --> current input (burden resistor = 250 Ohm)

AI 1: S5.1 = V --> voltage input, S5.1 = I --> current input (burden resistor = 250 Ohm)

Value:
0: Unipolar voltage input (0 V ... +10 V)
2: Unipolar current input (0 mA ... +20 mA)
3: Unipolar current input monitored (+4 mA to +20 mA)
4: Bipolar voltage input (-10 V ... +10 V)
5: Bipolar current input (-20 mA to +20 mA)

Index:
[0] = AI 0 (X521.1/X521.2, S5.0)
[1] = AI 1 (X521.3/X521.4, S5.1)

Warning:
The maximum voltage difference between the analog input terminals AI+, AI- and the ground of the TM31 (X520.6, X530.3) may not exceed 35 V.

For operation with the load resistor switched in, the voltage between the differential inputs AI+ and AI- may not exceed 15 V or the impressed current of 60 mA; if this is not carefully observed, the input will be damaged.

Notice:
For operation as a voltage input/current input, switch S5.0 or S5.1 must be appropriately set.

Note:
When changing p4056, the parameters of the scaling characteristic (p4057, p4058, p4059, p4060) are overwritten with the following default values:

For p4056 = 0, 4, p4057 is set to 0.0 V, p4058 to 0.0 %, p4059 to 10.0 V and p4060 to 100.0 %.

For p4056 = 2, 5, p4057 is set to 0.0 mA, p4058 to 0.0 %, p4059 to 20.0 mA and p4060 to 100.0 %.

For p4056 = 3, p4057 is set to 4.0 mA, p4058 to 0.0 %, p4059 to 20.0 mA and p4060 to 100.0 %.

p4057[0...1] TB30 analog inputs, characteristic value x1 / TB30 AI char x1

TB30

Can be changed: U, T	**Calculated:** -	**Access level:** 2
Data type: FloatingPoint32	**Dynamic index:** -	**Func. diagram:** 9104
P-Group: Terminals	**Units group:** -	**Unit selection:** -
Not for motor type: -	**Scaling:** -	**Expert list:** 1
Min	**Max**	**Factory setting**
-11.000 [V]	11.000 [V]	0.000 [V]

Description:
Sets the scaling characteristic for the analog inputs of Terminal Board 30 (TB30).

The scaling characteristic for the analog inputs is defined using 2 points.

This parameter specifies the x coordinate (input voltage in V) of the 1st value pair of the characteristic.

Index:
[0] = AI 0 (X482.1/X482.2)
[1] = AI 1 (X482.3/X482.4)

Note:
The parameters for the characteristic do not have a limiting effect.

p4057[0...1] TM31 analog inputs, characteristic value x1 / TM31 AI char x1

TM31

Can be changed: U, T	**Calculated:** -	**Access level:** 2
Data type: FloatingPoint32	**Dynamic index:** -	**Func. diagram:** 9566, 9568
P-Group: Terminals	**Units group:** -	**Unit selection:** -
Not for motor type: -	**Scaling:** -	**Expert list:** 1
Min	**Max**	**Factory setting**
-20.000	20.000	0.000

Description:
Sets the scaling characteristic for the analog inputs of Terminal Module 31 (TM31).

The scaling characteristic for the analog inputs is defined using 2 points.

This parameter specifies the x coordinate (input voltage in V or input current in mA) of the 1st value pair of the characteristic.

Index:
[0] = AI 0 (X521.1/X521.2, S5.0)
[1] = AI 1 (X521.3/X521.4, S5.1)

Dependency:
The unit of this parameter (V or mA) depends on the analog input type.

Refer to: r4056, p4056

Notice:
This parameter is automatically overwritten when the analog input type (p4056) is modified.

Note:
The parameters for the characteristic do not have a limiting effect.

© Siemens AG 2012 All Rights Reserved

p4058[0...1] TB30 analog inputs, characteristic value y1 / TB30 AI char y1

TB30	**Can be changed:** U, T	**Calculated:** -	**Access level:** 2
	Data type: FloatingPoint32	**Dynamic index:** -	**Func. diagram:** 9104
	P-Group: Terminals	**Units group:** -	**Unit selection:** -
	Not for motor type: -	**Scaling:** -	**Expert list:** 1
	Min	**Max**	**Factory setting**
	-1000.00 [%]	1000.00 [%]	0.00 [%]

Description: Sets the scaling characteristic for the analog inputs of Terminal Board 30 (TB30).
The scaling characteristic for the analog inputs is defined using 2 points.
This parameter specifies the y coordinate (percentage) of the 1st value pair of the characteristic.

Index: [0] = AI 0 (X482.1/X482.2)
[1] = AI 1 (X482.3/X482.4)

Note: The parameters for the characteristic do not have a limiting effect.

p4058[0...1] TM31 analog inputs, characteristic value y1 / TM31 AI char y1

TM31	**Can be changed:** U, T	**Calculated:** -	**Access level:** 2
	Data type: FloatingPoint32	**Dynamic index:** -	**Func. diagram:** 9566, 9568
	P-Group: Terminals	**Units group:** -	**Unit selection:** -
	Not for motor type: -	**Scaling:** -	**Expert list:** 1
	Min	**Max**	**Factory setting**
	-1000.00 [%]	1000.00 [%]	0.00 [%]

Description: Sets the scaling characteristic for the analog inputs of Terminal Module 31 (TM31).
The scaling characteristic for the analog inputs is defined using 2 points.
This parameter specifies the y coordinate (percentage) of the 1st value pair of the characteristic.

Index: [0] = AI 0 (X521.1/X521.2, S5.0)
[1] = AI 1 (X521.3/X521.4, S5.1)

Notice: This parameter is automatically overwritten when the analog input type (p4056) is modified.

Note: The parameters for the characteristic do not have a limiting effect.

p4059[0...1] TB30 analog inputs, characteristic value x2 / TB30 AI char x2

TB30	**Can be changed:** U, T	**Calculated:** -	**Access level:** 2
	Data type: FloatingPoint32	**Dynamic index:** -	**Func. diagram:** 9104
	P-Group: Terminals	**Units group:** -	**Unit selection:** -
	Not for motor type: -	**Scaling:** -	**Expert list:** 1
	Min	**Max**	**Factory setting**
	-11.000 [V]	11.000 [V]	10.000 [V]

Description: Sets the scaling characteristic for the analog inputs of Terminal Board 30 (TB30).
The scaling characteristic for the analog inputs is defined using 2 points.
This parameter specifies the x coordinate (input voltage in V) of the 2nd value pair of the characteristic.

Index: [0] = AI 0 (X482.1/X482.2)
[1] = AI 1 (X482.3/X482.4)

Note: The parameters for the characteristic do not have a limiting effect.

p4059[0...1] TM31 analog inputs, characteristic value x2 / TM31 AI char x2

TM31	**Can be changed:** U, T	**Calculated:** -	**Access level:** 2
	Data type: FloatingPoint32	**Dynamic index:** -	**Func. diagram:** 9566, 9568
	P-Group: Terminals	**Units group:** -	**Unit selection:** -
	Not for motor type: -	**Scaling:** -	**Expert list:** 1
	Min	**Max**	**Factory setting**
	-20.000	20.000	10.000

Description: Sets the scaling characteristic for the analog inputs of Terminal Module 31 (TM31).
The scaling characteristic for the analog inputs is defined using 2 points.

© Siemens AG 2012 All Rights Reserved

This parameter specifies the x coordinate (input voltage in V or input current in mA) of the 2nd value pair of the characteristic.

Index: [0] = AI 0 (X521.1/X521.2, S5.0)
[1] = AI 1 (X521.3/X521.4, S5.1)

Dependency: The unit of this parameter (V or mA) depends on the analog input type.
Refer to: r4056, p4056

Notice: This parameter is automatically overwritten when the analog input type (p4056) is modified.

Note: The parameters for the characteristic do not have a limiting effect.

p4060[0...1] TB30 analog inputs, characteristic value y2 / TB30 AI char y2

TB30

Can be changed: U, T	**Calculated:** -	**Access level:** 2
Data type: FloatingPoint32	**Dynamic index:** -	**Func. diagram:** 9104
P-Group: Terminals	**Units group:** -	**Unit selection:** -
Not for motor type: -	**Scaling:** -	**Expert list:** 1
Min	**Max**	**Factory setting**
-1000.00 [%]	1000.00 [%]	100.00 [%]

Description: Sets the scaling characteristic for the analog inputs of Terminal Board 30 (TB30).
The scaling characteristic for the analog inputs is defined using 2 points.
This parameter specifies the y coordinate (percentage) of the 2nd value pair of the characteristic.

Index: [0] = AI 0 (X482.1/X482.2)
[1] = AI 1 (X482.3/X482.4)

Note: The parameters for the characteristic do not have a limiting effect.

p4060[0...1] TM31 analog inputs, characteristic value y2 / TM31 AI char y2

TM31

Can be changed: U, T	**Calculated:** -	**Access level:** 2
Data type: FloatingPoint32	**Dynamic index:** -	**Func. diagram:** 9566, 9568
P-Group: Terminals	**Units group:** -	**Unit selection:** -
Not for motor type: -	**Scaling:** -	**Expert list:** 1
Min	**Max**	**Factory setting**
-1000.00 [%]	1000.00 [%]	100.00 [%]

Description: Sets the scaling characteristic for the analog inputs of Terminal Module 31 (TM31).
The scaling characteristic for the analog inputs is defined using 2 points.
This parameter specifies the y coordinate (percentage) of the 2nd value pair of the characteristic.

Index: [0] = AI 0 (X521.1/X521.2, S5.0)
[1] = AI 1 (X521.3/X521.4, S5.1)

Notice: This parameter is automatically overwritten when the analog input type (p4056) is modified.

Note: The parameters for the characteristic do not have a limiting effect.

p4061[0...1] TM31 analog inputs, wire breakage monitoring response threshold / TM31 WireBrkThresh

TM31

Can be changed: U, T	**Calculated:** -	**Access level:** 2
Data type: FloatingPoint32	**Dynamic index:** -	**Func. diagram:** 9566, 9568
P-Group: Terminals	**Units group:** -	**Unit selection:** -
Not for motor type: -	**Scaling:** -	**Expert list:** 1
Min	**Max**	**Factory setting**
0.00 [mA]	20.00 [mA]	2.00 [mA]

Description: Sets the response threshold for wire-breakage monitoring of the analog inputs of Terminal Module 31 (TM31).

Index: [0] = AI 0 (X521.1/X521.2, S5.0)
[1] = AI 1 (X521.3/X521.4, S5.1)

Dependency: For the following analog input type, the wire breakage monitoring is active:
p4056[x] = 3 (unipolar current input monitored (+4 mA ... +20 mA))
Refer to: r4056, p4056

© Siemens AG 2012 All Rights Reserved

p4062[0...1] TM31 analog inputs, wire breakage monitoring delay time / TM31 wirebrk t_del

TM31	**Can be changed:** U, T	**Calculated:** -	**Access level:** 2
	Data type: Unsigned16	**Dynamic index:** -	**Func. diagram:** 9566, 9568
	P-Group: Terminals	**Units group:** -	**Unit selection:** -
	Not for motor type: -	**Scaling:** -	**Expert list:** 1
	Min	**Max**	**Factory setting**
	0 [ms]	1000 [ms]	100 [ms]

Description: Sets the delay time for wire-breakage monitoring of the analog inputs on Terminal Module 31 (TM31).

Index: [0] = AI 0 (X521.1/X521.2, S5.0)
[1] = AI 1 (X521.3/X521.4, S5.1)

p4063[0...1] TB30 analog inputs offset / TB30 AI offset

TB30	**Can be changed:** U, T	**Calculated:** -	**Access level:** 2
	Data type: FloatingPoint32	**Dynamic index:** -	**Func. diagram:** 9104
	P-Group: Terminals	**Units group:** -	**Unit selection:** -
	Not for motor type: -	**Scaling:** -	**Expert list:** 1
	Min	**Max**	**Factory setting**
	-20.000 [V]	20.000 [V]	0.000 [V]

Description: Sets the offset for the analog inputs of Terminal Board 30 (TB30).
The offset is added to the input signal before the scaling characteristic.

Index: [0] = AI 0 (X482.1/X482.2)
[1] = AI 1 (X482.3/X482.4)

p4063[0...1] TM31 analog inputs offset / TM31 AI offset

TM31	**Can be changed:** U, T	**Calculated:** -	**Access level:** 2
	Data type: FloatingPoint32	**Dynamic index:** -	**Func. diagram:** 9566, 9568
	P-Group: Terminals	**Units group:** -	**Unit selection:** -
	Not for motor type: -	**Scaling:** -	**Expert list:** 1
	Min	**Max**	**Factory setting**
	-20.000	20.000	0.000

Description: Sets the offset for the analog inputs of Terminal Module 31 (TM31).
The offset is added to the input signal before the scaling characteristic.

Index: [0] = AI 0 (X521.1/X521.2, S5.0)
[1] = AI 1 (X521.3/X521.4, S5.1)

p4066[0...1] TB30 analog inputs, activate absolute value generation / TB30 AI absVal act

TB30	**Can be changed:** U, T	**Calculated:** -	**Access level:** 3
	Data type: Integer16	**Dynamic index:** -	**Func. diagram:** 9104
	P-Group: Terminals	**Units group:** -	**Unit selection:** -
	Not for motor type: -	**Scaling:** -	**Expert list:** 1
	Min	**Max**	**Factory setting**
	0	1	0

Description: Activates the absolute value generation for the analog input signals of the Terminal Board 30 (TB30).

Value:
0: No absolute value generation
1: Absolute value generation switched in

Index: [0] = AI 0 (X482.1/X482.2)
[1] = AI 1 (X482.3/X482.4)

© Siemens AG 2012 All Rights Reserved

p4066[0...1] TM31 analog inputs, activate absolute value generation / TM31 AI absVal act

TM31	**Can be changed:** U, T	**Calculated:** -	**Access level:** 3
	Data type: Integer16	**Dynamic index:** -	**Func. diagram:** 9566, 9568
	P-Group: Terminals	**Units group:** -	**Unit selection:** -
	Not for motor type: -	**Scaling:** -	**Expert list:** 1
	Min	**Max**	**Factory setting**
	0	1	0

Description: Activates the absolute value generation for the analog input signals of Terminal Module 31 (TM31).

Value:
0: No absolute value generation
1: Absolute value generation switched in

Index:
[0] = AI 0 (X521.1/X521.2, S5.0)
[1] = AI 1 (X521.3/X521.4, S5.1)

p4067[0...1] BI: TB30 analog inputs invert signal source / TB30 AI inv S_src

TB30	**Can be changed:** U, T	**Calculated:** -	**Access level:** 3
	Data type: Unsigned32 / Binary	**Dynamic index:** -	**Func. diagram:** 9104
	P-Group: Terminals	**Units group:** -	**Unit selection:** -
	Not for motor type: -	**Scaling:** -	**Expert list:** 1
	Min	**Max**	**Factory setting**
	-	-	0

Description: Sets the signal source to invert the analog input signals of the Terminal Board 30 (TB30).

Index:
[0] = AI 0 (X482.1/X482.2)
[1] = AI 1 (X482.3/X482.4)

p4067[0...1] BI: TM31 analog inputs invert signal source / TM31 AI inv S_src

TM31	**Can be changed:** U, T	**Calculated:** -	**Access level:** 3
	Data type: Unsigned32 / Binary	**Dynamic index:** -	**Func. diagram:** 9566, 9568
	P-Group: Terminals	**Units group:** -	**Unit selection:** -
	Not for motor type: -	**Scaling:** -	**Expert list:** 1
	Min	**Max**	**Factory setting**
	-	-	0

Description: Sets the signal source to invert the analog inputs signals of Terminal Module 31 (TM31).

Index:
[0] = AI 0 (X521.1/X521.2, S5.0)
[1] = AI 1 (X521.3/X521.4, S5.1)

p4068[0...1] TB30 analog inputs, noise suppression window / TB30 AI window

TB30	**Can be changed:** U, T	**Calculated:** -	**Access level:** 3
	Data type: FloatingPoint32	**Dynamic index:** -	**Func. diagram:** 9104
	P-Group: Terminals	**Units group:** -	**Unit selection:** -
	Not for motor type: -	**Scaling:** -	**Expert list:** 1
	Min	**Max**	**Factory setting**
	0.00 [%]	20.00 [%]	0.00 [%]

Description: Sets the noise suppression window of the analog inputs for Terminal Board 30 (TB30).
Changes less than the window are suppressed.

Index:
[0] = AI 0 (X482.1/X482.2)
[1] = AI 1 (X482.3/X482.4)

Note: AI: Analog Input

© Siemens AG 2012 All Rights Reserved

p4068[0...1] TM31 analog inputs, window to suppress noise / TM31 AI window

TM31	**Can be changed:** U, T	**Calculated:** -	**Access level:** 3
	Data type: FloatingPoint32	**Dynamic index:** -	**Func. diagram:** 9566, 9568
	P-Group: Terminals	**Units group:** -	**Unit selection:** -
	Not for motor type: -	**Scaling:** -	**Expert list:** 1
	Min	**Max**	**Factory setting**
	0.00 [%]	20.00 [%]	0.00 [%]

Description: Sets the noise suppression window of the analog inputs for Terminal Module31 (TM31).
Changes less than the window are suppressed.

Index: [0] = AI 0 (X521.1/X521.2, S5.0)
[1] = AI 1 (X521.3/X521.4, S5.1)

Note: AI: Analog Input

p4069[0...1] BI: TB30 analog inputs, signal source for enable / TB30 AI enable

TB30	**Can be changed:** U, T	**Calculated:** -	**Access level:** 3
	Data type: Unsigned32 / Binary	**Dynamic index:** -	**Func. diagram:** 9104
	P-Group: Terminals	**Units group:** -	**Unit selection:** -
	Not for motor type: -	**Scaling:** -	**Expert list:** 1
	Min	**Max**	**Factory setting**
	-	-	1

Description: Sets the signal source for enabling the analog inputs of the Terminal Board 30 (TB30).

Index: [0] = AI 0 (X482.1/X482.2)
[1] = AI 1 (X482.3/X482.4)

p4069[0...1] BI: TM31 analog inputs, signal source for enable / TM31 AI enable

TM31	**Can be changed:** U, T	**Calculated:** -	**Access level:** 3
	Data type: Unsigned32 / Binary	**Dynamic index:** -	**Func. diagram:** 9566, 9568
	P-Group: Terminals	**Units group:** -	**Unit selection:** -
	Not for motor type: -	**Scaling:** -	**Expert list:** 1
	Min	**Max**	**Factory setting**
	-	-	1

Description: Sets the signal source for the enable signal of the analog inputs of Terminal Module 31 (TM31).

Index: [0] = AI 0 (X521.1/X521.2, S5.0)
[1] = AI 1 (X521.3/X521.4, S5.1)

p4071[0...1] CI: TB30 analog outputs, signal source / TB30 AO S_src

TB30	**Can be changed:** U, T	**Calculated:** -	**Access level:** 1
	Data type: Unsigned32 / FloatingPoint32	**Dynamic index:** -	**Func. diagram:** 1790, 9106
	P-Group: Terminals	**Units group:** -	**Unit selection:** -
	Not for motor type: -	**Scaling:** PERCENT	**Expert list:** 1
	Min	**Max**	**Factory setting**
	-	-	0

Description: Sets the signal source for the analog outputs of the Terminal Board 30 (TB30).

Index: [0] = AO 0 (X482.5/X482.6)
[1] = AO 1 (X482.7/X482.8)

Note: AO: Analog Output

© Siemens AG 2012 All Rights Reserved

p4071[0...1] CI: TM31 analog outputs, signal source / TM31 AO S_src

TM31	**Can be changed:** U, T	**Calculated:** -	**Access level:** 1
	Data type: Unsigned32 / FloatingPoint32	**Dynamic index:** -	**Func. diagram:** 1840, 9572
	P-Group: Terminals	**Units group:** -	**Unit selection:** -
	Not for motor type: -	**Scaling:** PERCENT	**Expert list:** 1
	Min	**Max**	**Factory setting**
	-	-	0

Description: Sets the signal source for the analog outputs of Terminal Module 31 (TM31).

Index: [0] = AO 0 (X522.1, X522.2, X522.3)
[1] = AO 1 (X522.4, X522.5, X522.6)

Note: AO: Analog Output

r4072[0...1] TB30 analog outputs, output value currently referred / TB30 AO outp_val

TB30	**Can be changed:** -	**Calculated:** -	**Access level:** 1
	Data type: FloatingPoint32	**Dynamic index:** -	**Func. diagram:** 9106
	P-Group: Terminals	**Units group:** -	**Unit selection:** -
	Not for motor type: -	**Scaling:** -	**Expert list:** 1
	Min	**Max**	**Factory setting**
	- [%]	- [%]	- [%]

Description: Displays the actual referred output value of the analog outputs of the Terminal Board 30 (TB30).

Index: [0] = AO 0 (X482.5/X482.6)
[1] = AO 1 (X482.7/X482.8)

r4072[0...1] TM31 analog outputs, output value currently referred / TM31 AO outp_val

TM31	**Can be changed:** -	**Calculated:** -	**Access level:** 1
	Data type: FloatingPoint32	**Dynamic index:** -	**Func. diagram:** 9572
	P-Group: Terminals	**Units group:** -	**Unit selection:** -
	Not for motor type: -	**Scaling:** -	**Expert list:** 1
	Min	**Max**	**Factory setting**
	- [%]	- [%]	- [%]

Description: Displays the actual referred output value of the analog outputs of Terminal Module 31 (TM31).

Index: [0] = AO 0 (X522.1, X522.2, X522.3)
[1] = AO 1 (X522.4, X522.5, X522.6)

p4073[0...1] TB30 analog outputs, smoothing time constant / TB30 AO T_smooth

TB30	**Can be changed:** U, T	**Calculated:** -	**Access level:** 1
	Data type: FloatingPoint32	**Dynamic index:** -	**Func. diagram:** 9106
	P-Group: Terminals	**Units group:** -	**Unit selection:** -
	Not for motor type: -	**Scaling:** -	**Expert list:** 1
	Min	**Max**	**Factory setting**
	0.0 [ms]	1000.0 [ms]	0.0 [ms]

Description: Sets the smoothing time constant of the 1st order low pass filter for the analog outputs of the Terminal Board 30 (TB30).

Index: [0] = AO 0 (X482.5/X482.6)
[1] = AO 1 (X482.7/X482.8)

© Siemens AG 2012 All Rights Reserved

p4073[0...1] TM31 analog outputs, smoothing time constant / TM31 AO T_smooth

TM31	**Can be changed:** U, T	**Calculated:** -	**Access level:** 1
	Data type: FloatingPoint32	**Dynamic index:** -	**Func. diagram:** 9572
	P-Group: Terminals	**Units group:** -	**Unit selection:** -
	Not for motor type: -	**Scaling:** -	**Expert list:** 1
	Min	**Max**	**Factory setting**
	0.0 [ms]	1000.0 [ms]	0.0 [ms]

Description: Sets the smoothing time constant of the 1st-order low pass filter for the analog outputs of Terminal Module 31 (TM31).

Index: [0] = AO 0 (X522.1, X522.2, X522.3)
[1] = AO 1 (X522.4, X522.5, X522.6)

r4074[0...1] TB30 analog outputs, actual output voltage / TB30 AO U_outp

TB30	**Can be changed:** -	**Calculated:** -	**Access level:** 1
	Data type: FloatingPoint32	**Dynamic index:** -	**Func. diagram:** 9106
	P-Group: Terminals	**Units group:** -	**Unit selection:** -
	Not for motor type: -	**Scaling:** -	**Expert list:** 1
	Min	**Max**	**Factory setting**
	- [V]	- [V]	- [V]

Description: Displays the actual output voltage at the analog outputs of the Terminal Board 30 (TB30).

Index: [0] = AO 0 (X482.5/X482.6)
[1] = AO 1 (X482.7/X482.8)

r4074[0...1] TM31 analog outputs, current output voltage/current / TM31 AO U/I_outp

TM31	**Can be changed:** -	**Calculated:** -	**Access level:** 1
	Data type: FloatingPoint32	**Dynamic index:** -	**Func. diagram:** 9572
	P-Group: Terminals	**Units group:** -	**Unit selection:** -
	Not for motor type: -	**Scaling:** p2001	**Expert list:** 1
	Min	**Max**	**Factory setting**
	-	-	-

Description: Displays the actual output voltage in V when set as voltage output.
Displays the actual output voltage in mA when set as current output.

Index: [0] = AO 0 (X522.1, X522.2, X522.3)
[1] = AO 1 (X522.4, X522.5, X522.6)

Dependency: The type of the analog output AO x (voltage or current output) is set using p4076.
Refer to: r4076, p4076

Note: AO: Analog Output

p4075[0...1] TB30 analog outputs, activate absolute value generation / TB30 AO absVal act

TB30	**Can be changed:** T	**Calculated:** -	**Access level:** 3
	Data type: Integer16	**Dynamic index:** -	**Func. diagram:** 9106
	P-Group: Terminals	**Units group:** -	**Unit selection:** -
	Not for motor type: -	**Scaling:** -	**Expert list:** 1
	Min	**Max**	**Factory setting**
	0	1	0

Description: Activates the absolute value generation for the analog outputs of the Terminal Board 30 (TB30).

Value:
0: No absolute value generation
1: Absolute value generation switched in

Index: [0] = AO 0 (X482.5/X482.6)
[1] = AO 1 (X482.7/X482.8)

© Siemens AG 2012 All Rights Reserved

p4075[0...1] TM31 analog outputs, activate absolute value generation / TM31 AO absVal act

TM31	**Can be changed:** T	**Calculated:** -	**Access level:** 3
	Data type: Integer16	**Dynamic index:** -	**Func. diagram:** 9572
	P-Group: Terminals	**Units group:** -	**Unit selection:** -
	Not for motor type: -	**Scaling:** -	**Expert list:** 1
	Min	**Max**	**Factory setting**
	0	1	0

Description: Activates the absolute value generation for the analog outputs of Terminal Module 31 (TM31).

Value:
0: No absolute value generation
1: Absolute value generation switched in

Index:
[0] = AO 0 (X522.1, X522.2, X522.3)
[1] = AO 1 (X522.4, X522.5, X522.6)

r4076[0...1] TB30 analog outputs, type / TB30 AO type

TB30	**Can be changed:** -	**Calculated:** -	**Access level:** 1
	Data type: Integer16	**Dynamic index:** -	**Func. diagram:** -
	P-Group: Terminals	**Units group:** -	**Unit selection:** -
	Not for motor type: -	**Scaling:** -	**Expert list:** 1
	Min	**Max**	**Factory setting**
	4	4	-

Description: Displays the type of analog outputs of the Terminal Board 30 (TB30).

Value:
4: Voltage output (-10 V ... +10 V)

Index:
[0] = AO 0 (X482.5/X482.6)
[1] = AO 1 (X482.7/X482.8)

p4076[0...1] TM31 analog outputs, type / TM31 AO type

TM31	**Can be changed:** U, T	**Calculated:** -	**Access level:** 1
	Data type: Integer16	**Dynamic index:** -	**Func. diagram:** 9572
	P-Group: Terminals	**Units group:** -	**Unit selection:** -
	Not for motor type: -	**Scaling:** -	**Expert list:** 1
	Min	**Max**	**Factory setting**
	0	4	4

Description: Sets the type of analog outputs of Terminal Module 31 (TM31).
p4076[x] = 1, 4 correspond to a voltage output (p4074, p4078, p4080, p4083 are displayed in V).
p4076[x] = 0, 2, 3 correspond to a current output (p4074, p4078, p4080, p4083 are displayed in mA).

Value:
0: Current output (0 mA ... +20 mA)
1: Voltage output (0 V ... +10 V)
2: Current output (+4 mA ... +20 mA)
3: Current output (-20 mA ... +20 mA)
4: Voltage output (-10 V ... +10 V)

Index:
[0] = AO 0 (X522.1, X522.2, X522.3)
[1] = AO 1 (X522.4, X522.5, X522.6)

Dependency: Refer to: p4077, p4078, p4079, p4080

Note: When changing p4076, the parameters of the scaling characteristic (p4077, p4078, p4079, p4080) are overwritten with the following default values:
For p4076 = 0, 3, p4077 is set to 0.0 %, p4078 to 0.0 mA, p4079 to 100.0 % and p4080 to 20.0 mA.
For p4076 = 1, 4, p4077 is set to 0.0 %, p4078 to 0.0 V, p4079 to 100.0 % and p4080 to 10.0 V.
For p4076 = 2, p4077 is set to 0.0 %, p4078 to 4.0 mA, p4079 to 100.0 % and p4080 to 20.0 mA.

© Siemens AG 2012 All Rights Reserved

p4077[0...1] TB30 analog outputs, characteristic value x1 / TB30 AO char x1

TB30	**Can be changed:** U, T	**Calculated:** -	**Access level:** 2
	Data type: FloatingPoint32	**Dynamic index:** -	**Func. diagram:** 9106
	P-Group: Terminals	**Units group:** -	**Unit selection:** -
	Not for motor type: -	**Scaling:** -	**Expert list:** 1
	Min	**Max**	**Factory setting**
	-1000.00 [%]	1000.00 [%]	0.00 [%]

Description: Sets the scaling characteristic for the analog outputs of Terminal Board 30 (TB30).
The scaling characteristic for the analog outputs is defined using 2 points.
This parameter specifies the x coordinate (percentage) of the 1st value pair of the characteristic.

Index: [0] = AO 0 (X482.5/X482.6)
[1] = AO 1 (X482.7/X482.8)

Note: The parameters for the characteristic do not have a limiting effect.

p4077[0...1] TM31 analog outputs, characteristic value x1 / TM31 AO char x1

TM31	**Can be changed:** U, T	**Calculated:** -	**Access level:** 2
	Data type: FloatingPoint32	**Dynamic index:** -	**Func. diagram:** 9572
	P-Group: Terminals	**Units group:** -	**Unit selection:** -
	Not for motor type: -	**Scaling:** -	**Expert list:** 1
	Min	**Max**	**Factory setting**
	-1000.00 [%]	1000.00 [%]	0.00 [%]

Description: Sets the scaling characteristic for the analog outputs of Terminal Module 31 (TM31).
The scaling characteristic for the analog outputs is defined using 2 points.
This parameter specifies the x coordinate (percentage) of the 1st value pair of the characteristic.

Index: [0] = AO 0 (X522.1, X522.2, X522.3)
[1] = AO 1 (X522.4, X522.5, X522.6)

Dependency: Refer to: r4076, p4076

Notice: This parameter is automatically overwritten when changing p4076 (type of analog outputs).

Note: The parameters for the characteristic do not have a limiting effect.

p4078[0...1] TB30 analog outputs, characteristic value y1 / TB30 AO char y1

TB30	**Can be changed:** U, T	**Calculated:** -	**Access level:** 2
	Data type: FloatingPoint32	**Dynamic index:** -	**Func. diagram:** 9106
	P-Group: Terminals	**Units group:** -	**Unit selection:** -
	Not for motor type: -	**Scaling:** -	**Expert list:** 1
	Min	**Max**	**Factory setting**
	-11.000 [V]	11.000 [V]	0.000 [V]

Description: Sets the scaling characteristic for the analog outputs of Terminal Board 30 (TB30).
The scaling characteristic for the analog outputs is defined using 2 points.
This parameter specifies the y coordinate (output voltage in V) of the 1st value pair of the characteristic.

Index: [0] = AO 0 (X482.5/X482.6)
[1] = AO 1 (X482.7/X482.8)

Note: The parameters for the characteristic do not have a limiting effect.

p4078[0...1] TM31 analog outputs, characteristic value y1 / TM31 AO char y1

TM31	**Can be changed:** U, T	**Calculated:** -	**Access level:** 2
	Data type: FloatingPoint32	**Dynamic index:** -	**Func. diagram:** 9572
	P-Group: Terminals	**Units group:** -	**Unit selection:** -
	Not for motor type: -	**Scaling:** -	**Expert list:** 1
	Min	**Max**	**Factory setting**
	-20.000 [V]	20.000 [V]	0.000 [V]

Description: Sets the scaling characteristic for the analog outputs of Terminal Module 31 (TM31).

© Siemens AG 2012 All Rights Reserved

The scaling characteristic for the analog outputs is defined using 2 points.
This parameter specifies the y coordinate (output voltage in V or output current in mA) of the 1st value pair of the characteristic.

Index: [0] = AO 0 (X522.1, X522.2, X522.3)
[1] = AO 1 (X522.4, X522.5, X522.6)

Dependency: The unit of this parameter (V or mA) depends on the analog output type.
Refer to: r4076, p4076

Notice: This parameter is automatically overwritten when changing p4076 (type of analog outputs).

Note: The parameters for the characteristic do not have a limiting effect.

p4079[0...1] TB30 analog outputs, characteristic value x2 / TB30 AO char x2

TB30

Can be changed: U, T	**Calculated:** -	**Access level:** 2
Data type: FloatingPoint32	**Dynamic index:** -	**Func. diagram:** 9106
P-Group: Terminals	**Units group:** -	**Unit selection:** -
Not for motor type: -	**Scaling:** -	**Expert list:** 1
Min	**Max**	**Factory setting**
-1000.00 [%]	1000.00 [%]	100.00 [%]

Description: Sets the scaling characteristic for the analog outputs of Terminal Board 30 (TB30).
The scaling characteristic for the analog outputs is defined using 2 points.
This parameter specifies the x coordinate (percentage) of the 2nd value pair of the characteristic.

Index: [0] = AO 0 (X482.5/X482.6)
[1] = AO 1 (X482.7/X482.8)

Note: The parameters for the characteristic do not have a limiting effect.

p4079[0...1] TM31 analog outputs, characteristic value x2 / TM31 AO char x2

TM31

Can be changed: U, T	**Calculated:** -	**Access level:** 2
Data type: FloatingPoint32	**Dynamic index:** -	**Func. diagram:** 9572
P-Group: Terminals	**Units group:** -	**Unit selection:** -
Not for motor type: -	**Scaling:** -	**Expert list:** 1
Min	**Max**	**Factory setting**
-1000.00 [%]	1000.00 [%]	100.00 [%]

Description: Sets the scaling characteristic for the analog outputs of Terminal Module 31 (TM31).
The scaling characteristic for the analog outputs is defined using 2 points.
This parameter specifies the x coordinate (percentage) of the 2nd value pair of the characteristic.

Index: [0] = AO 0 (X522.1, X522.2, X522.3)
[1] = AO 1 (X522.4, X522.5, X522.6)

Dependency: Refer to: r4076, p4076

Notice: This parameter is automatically overwritten when changing p4076 (type of analog outputs).

Note: The parameters for the characteristic do not have a limiting effect.

p4080[0...1] TB30 analog outputs, characteristic value y2 / TB30 AO char y2

TB30

Can be changed: U, T	**Calculated:** -	**Access level:** 2
Data type: FloatingPoint32	**Dynamic index:** -	**Func. diagram:** 9106
P-Group: Terminals	**Units group:** -	**Unit selection:** -
Not for motor type: -	**Scaling:** -	**Expert list:** 1
Min	**Max**	**Factory setting**
-11.000 [V]	11.000 [V]	10.000 [V]

Description: Sets the scaling characteristic for the analog outputs of Terminal Board 30 (TB30).
The scaling characteristic for the analog outputs is defined using 2 points.
This parameter specifies the y coordinate (output voltage in V) of the 2nd value pair of the characteristic.

Index: [0] = AO 0 (X482.5/X482.6)
[1] = AO 1 (X482.7/X482.8)

Note: The parameters for the characteristic do not have a limiting effect.

© Siemens AG 2012 All Rights Reserved

p4080[0...1] TM31 analog outputs, characteristic value y2 / TM31 AO char y2

TM31	**Can be changed:** U, T	**Calculated:** -	**Access level:** 2
	Data type: FloatingPoint32	**Dynamic index:** -	**Func. diagram:** 9572
	P-Group: Terminals	**Units group:** -	**Unit selection:** -
	Not for motor type: -	**Scaling:** -	**Expert list:** 1
	Min	**Max**	**Factory setting**
	-20.000 [V]	20.000 [V]	10.000 [V]

Description: Sets the scaling characteristic for the analog outputs of Terminal Module 31 (TM31).
The scaling characteristic for the analog outputs is defined using 2 points.
This parameter specifies the y coordinate (output voltage in V or output current in mA) of the 2nd value pair of the characteristic.

Index: [0] = AO 0 (X522.1, X522.2, X522.3)
[1] = AO 1 (X522.4, X522.5, X522.6)

Dependency: The unit of this parameter (V or mA) depends on the analog output type.
Refer to: r4076, p4076

Notice: This parameter is automatically overwritten when changing p4076 (type of analog outputs).

Note: The parameters for the characteristic do not have a limiting effect.

p4082[0...1] BI: TB30 analog outputs invert signal source / TB30 AO inv S_src

TB30	**Can be changed:** U, T	**Calculated:** -	**Access level:** 3
	Data type: Unsigned32 / Binary	**Dynamic index:** -	**Func. diagram:** 9106
	P-Group: Terminals	**Units group:** -	**Unit selection:** -
	Not for motor type: -	**Scaling:** -	**Expert list:** 1
	Min	**Max**	**Factory setting**
	-	-	0

Description: Sets the signal source for inverting the analog output signals of the Terminal Board 30 (TB30).

Index: [0] = AO 0 (X482.5/X482.6)
[1] = AO 1 (X482.7/X482.8)

p4082[0...1] BI: TM31 analog outputs invert signal source / TM31 AO inv S_src

TM31	**Can be changed:** U, T	**Calculated:** -	**Access level:** 3
	Data type: Unsigned32 / Binary	**Dynamic index:** -	**Func. diagram:** 9572
	P-Group: Terminals	**Units group:** -	**Unit selection:** -
	Not for motor type: -	**Scaling:** -	**Expert list:** 1
	Min	**Max**	**Factory setting**
	-	-	0

Description: Sets the signal source to invert the analog output signals of Terminal Module 31 (TM31).

Index: [0] = AO 0 (X522.1, X522.2, X522.3)
[1] = AO 1 (X522.4, X522.5, X522.6)

p4083[0...1] TB30 analog outputs, offset / TB30 AO offset

TB30	**Can be changed:** U, T	**Calculated:** -	**Access level:** 1
	Data type: FloatingPoint32	**Dynamic index:** -	**Func. diagram:** 9106
	P-Group: Terminals	**Units group:** -	**Unit selection:** -
	Not for motor type: -	**Scaling:** -	**Expert list:** 1
	Min	**Max**	**Factory setting**
	-10.000	10.000	0.000

Description: Sets the offset for the analog outputs of Terminal Board 30 (TB30).
The offset is added to the output signal after the scaling characteristic.

Index: [0] = AO 0 (X482.5/X482.6)
[1] = AO 1 (X482.7/X482.8)

© Siemens AG 2012 All Rights Reserved

p4083[0...1] TM31 analog outputs, offset / TM31 AO offset

TM31

Can be changed: U, T	**Calculated:** -	**Access level:** 1
Data type: FloatingPoint32	**Dynamic index:** -	**Func. diagram:** 9572
P-Group: Terminals	**Units group:** -	**Unit selection:** -
Not for motor type: -	**Scaling:** -	**Expert list:** 1
Min	**Max**	**Factory setting**
-20.000	20.000	0.000

Description: Sets the offset for the analog outputs of Terminal Module 31 (TM31).
The offset is added to the output signal after the scaling characteristic.

Index: [0] = AO 0 (X522.1, X522.2, X522.3)
[1] = AO 1 (X522.4, X522.5, X522.6)

Dependency: The unit of this parameter (V or mA) depends on the analog input type.
Refer to: r4076, p4076

Note: This means, for example, the offset of a downstream isolating amplifier can be compensated.

p4095 TB30 digital inputs, simulation mode / TB30 DI sim_mode

TB30

Can be changed: U, T	**Calculated:** -	**Access level:** 2
Data type: Unsigned32	**Dynamic index:** -	**Func. diagram:** 1790, 9100
P-Group: Commands	**Units group:** -	**Unit selection:** -
Not for motor type: -	**Scaling:** -	**Expert list:** 1
Min	**Max**	**Factory setting**
-	-	0000 bin

Description: Sets the simulation mode for the digital inputs of the Terminal Board 30 (TB30).

Bit field:

Bit	Signal name	1 signal	0 signal	FP
00	DI 0 (X481.1)	Simulation	Terminal eval	-
01	DI 1 (X481.2)	Simulation	Terminal eval	-
02	DI 2 (X481.3)	Simulation	Terminal eval	-
03	DI 3 (X481.4)	Simulation	Terminal eval	-

Dependency: The setpoint for the input signals is specified using p4096.
Refer to: p4096

Warning: A drive that is moved by simulating the inputs of a Terminal Board is brought to a standstill while the Terminal Module is being activated or de-activated.

Note: This parameter is not saved when data is backed-up (p0971, p0977).
DI: Digital Input

p4095 TM31 digital inputs, simulation mode / TM31 DI sim_mode

TM31

Can be changed: U, T	**Calculated:** -	**Access level:** 2
Data type: Unsigned32	**Dynamic index:** -	**Func. diagram:** 1840, 9550, 9552, 9560, 9562
P-Group: Terminals	**Units group:** -	**Unit selection:** -
Not for motor type: -	**Scaling:** -	**Expert list:** 1
Min	**Max**	**Factory setting**
-	-	0000 0000 0000 0000 bin

Description: Sets the simulation mode for the digital inputs of Terminal Module 31 (TM31).

Bit field:

Bit	Signal name	1 signal	0 signal	FP
00	DI 0 (X520.1)	Simulation	Terminal eval	-
01	DI 1 (X520.2)	Simulation	Terminal eval	-
02	DI 2 (X520.3)	Simulation	Terminal eval	-
03	DI 3 (X520.4)	Simulation	Terminal eval	-
04	DI 4 (X530.1)	Simulation	Terminal eval	-
05	DI 5 (X530.2)	Simulation	Terminal eval	-
06	DI 6 (X530.3)	Simulation	Terminal eval	-

© Siemens AG 2012 All Rights Reserved

07	DI 7 (X530.4)	Simulation	Terminal eval	-
08	DI/DO 8 (X541.2)	Simulation	Terminal eval	-
09	DI/DO 9 (X541.3)	Simulation	Terminal eval	-
10	DI/DO 10 (X541.4)	Simulation	Terminal eval	-
11	DI/DO 11 (X541.5)	Simulation	Terminal eval	-

Dependency: The setpoint for the input signals is specified using p4096.
Refer to: p4096

Warning: A drive that is moved by simulating the inputs of a Terminal Module is brought to a standstill while the Terminal Module is being activated or de-activated.

Note: This parameter is not saved when data is backed-up (p0971, p0977).
DI: Digital Input
DI/DO: Bidirectional Digital Input/Output

p4096 TB30 digital inputs, simulation mode setpoint / TB30 DI sim setpt

TB30

Can be changed: U, T	**Calculated:** -	**Access level:** 2
Data type: Unsigned32	**Dynamic index:** -	**Func. diagram:** 1790, 9100
P-Group: Commands	**Units group:** -	**Unit selection:** -
Not for motor type: -	**Scaling:** -	**Expert list:** 1
Min	**Max**	**Factory setting**
-	-	0000 bin

Description: Sets the setpoint for the input signals in the simulation mode of the digital inputs of the Terminal Board 30 (TB30).

Bit field:

Bit	Signal name	1 signal	0 signal	FP
00	DI 0 (X481.1)	High	Low	-
01	DI 1 (X481.2)	High	Low	-
02	DI 2 (X481.3)	High	Low	-
03	DI 3 (X481.4)	High	Low	-

Dependency: The simulation of a digital input is selected using p4095.
Refer to: p4095

Note: This parameter is not saved when data is backed-up (p0971, p0977).
DI: Digital Input

p4096 TM31 digital inputs, simulation mode setpoint / TM31 DI sim setp

TM31

Can be changed: U, T	**Calculated:** -	**Access level:** 2
Data type: Unsigned32	**Dynamic index:** -	**Func. diagram:** 1840, 9550, 9552, 9560, 9562
P-Group: Terminals	**Units group:** -	**Unit selection:** -
Not for motor type: -	**Scaling:** -	**Expert list:** 1
Min	**Max**	**Factory setting**
-	-	0000 0000 0000 0000 bin

Description: Sets the setpoint for the input signals in the simulation mode of the digital inputs of Terminal Module 31 (TM31).

Bit field:

Bit	Signal name	1 signal	0 signal	FP
00	DI 0 (X520.1)	High	Low	-
01	DI 1 (X520.2)	High	Low	-
02	DI 2 (X520.3)	High	Low	-
03	DI 3 (X520.4)	High	Low	-
04	DI 4 (X530.1)	High	Low	-
05	DI 5 (X530.2)	High	Low	-
06	DI 6 (X530.3)	High	Low	-
07	DI 7 (X530.4)	High	Low	-
08	DI/DO 8 (X541.2)	High	Low	-
09	DI/DO 9 (X541.3)	High	Low	-
10	DI/DO 10 (X541.4)	High	Low	-
11	DI/DO 11 (X541.5)	High	Low	-

© Siemens AG 2012 All Rights Reserved

Dependency: The simulation of a digital input is selected using p4095.
Refer to: p4095

Note: This parameter is not saved when data is backed-up (p0971, p0977).
DI: Digital Input
DI/DO: Bidirectional Digital Input/Output

p4097[0...1] TB30 analog inputs simulation mode / TB30 AI sim_mode

TB30

Can be changed: U, T	**Calculated:** -	**Access level:** 2
Data type: Integer16	**Dynamic index:** -	**Func. diagram:** 9104
P-Group: Terminals	**Units group:** -	**Unit selection:** -
Not for motor type: -	**Scaling:** -	**Expert list:** 1
Min	**Max**	**Factory setting**
0	1	0

Description: Sets the simulation mode for the analog inputs of the Terminal Board 30 (TB30).

Value:
0: Terminal evaluation for analog input x
1: Simulation for analog input x

Index:
[0] = AI 0 (X482.1/X482.2)
[1] = AI 1 (X482.3/X482.4)

Dependency: The setpoint for the input voltage is specified via p4098.
Refer to: p4098

Note: This parameter is not saved when data is backed-up (p0971, p0977).
AI: Analog Input

p4097[0...1] TM31 analog inputs simulation mode / TM31 AI sim_mode

TM31

Can be changed: U, T	**Calculated:** -	**Access level:** 2
Data type: Integer16	**Dynamic index:** -	**Func. diagram:** 9566, 9568
P-Group: Terminals	**Units group:** -	**Unit selection:** -
Not for motor type: -	**Scaling:** -	**Expert list:** 1
Min	**Max**	**Factory setting**
0	1	0

Description: Sets the simulation mode for the analog inputs of Terminal Module 31 (TM31).

Value:
0: Terminal evaluation for analog input x
1: Simulation for analog input x

Index:
[0] = AI 0 (X521.1/X521.2, S5.0)
[1] = AI 1 (X521.3/X521.4, S5.1)

Dependency: The setpoint for the input voltage is specified via p4098.
Refer to: p4098

Note: This parameter is not saved when data is backed-up (p0971, p0977).
AI: Analog Input

p4098[0...1] TB30 analog inputs simulation mode setpoint / TB30 AI sim setp

TB30

Can be changed: U, T	**Calculated:** -	**Access level:** 2
Data type: FloatingPoint32	**Dynamic index:** -	**Func. diagram:** 9104
P-Group: Terminals	**Units group:** -	**Unit selection:** -
Not for motor type: -	**Scaling:** -	**Expert list:** 1
Min	**Max**	**Factory setting**
-11.000 [V]	11.000 [V]	0.000 [V]

Description: Sets the setpoint for the input voltage in the simulation mode of the analog inputs of Terminal Board 30 (TB30).

Index:
[0] = AI 0 (X482.1/X482.2)
[1] = AI 1 (X482.3/X482.4)

Dependency: The simulation of an analog input is selected using p4097.
Refer to: p4097

© Siemens AG 2012 All Rights Reserved

Note: This parameter is not saved when data is backed-up (p0971, p0977).
AI: Analog Input

p4098[0...1] TM31 analog inputs simulation mode setpoint / TM31 AI sim setp

TM31

Can be changed: U, T	**Calculated:** -	**Access level:** 2
Data type: FloatingPoint32	**Dynamic index:** -	**Func. diagram:** 9566, 9568
P-Group: Terminals	**Units group:** -	**Unit selection:** -
Not for motor type: -	**Scaling:** -	**Expert list:** 1
Min	**Max**	**Factory setting**
-20.000	20.000	0.000

Description: Sets the setpoint for the input value in simulation mode of the analog inputs of Terminal Module 31 (TM31).

Index: [0] = AI 0 (X521.1/X521.2, S5.0)
[1] = AI 1 (X521.3/X521.4, S5.1)

Dependency: The simulation of an analog input is selected using p4097.
If AI x is parameterized as voltage input (p4056), then the setpoint is a voltage in V.
If AI x is parameterized as current input (p4056), then the setpoint is a current in mA.
Refer to: r4056, p4056, p4097

Note: This parameter is not saved when data is backed-up (p0971, p0977).
AI: Analog Input

p4099[0...2] TB30 inputs/outputs, sampling time / TB30 I/O t_sample

TB30

Can be changed: C1(3)	**Calculated:** -	**Access level:** 3
Data type: FloatingPoint32	**Dynamic index:** -	**Func. diagram:** 1790, 9100
P-Group: Commands	**Units group:** -	**Unit selection:** -
Not for motor type: -	**Scaling:** -	**Expert list:** 1
Min	**Max**	**Factory setting**
0.00 [µs]	5000.00 [µs]	[0] 4000.00 [µs]
		[1] 4000.00 [µs]
		[2] 4000.00 [µs]

Description: Sets the sampling time for the inputs and outputs of Terminal Board 30 (TB30).

Index: [0] = Digital inputs/outputs (DI/DO)
[1] = Analog inputs (AI)
[2] = Analog outputs (AO)

Dependency: The parameter can only be modified for p0009 = 3, 29.
The sampling times can only be set as an integer multiple of the basic sampling time (r0110, r0111).
Refer to: p0009, r0110, r0111

Note: The changed sampling time is immediately effective after a completed sub-boot (p0009 -> 0).
For clock cycle synchronous PROFIBUS operation, the TB30 hardware (e.g. A/D converter) is operated with the PROFIBUS clock cycle (r2064[1]). This clock cycle is also kept after the PROFIBUS connection has been exited up to the next time that the Control Unit is powered down. In this case, a faster sampling time than the PROFIBUS clock cycle is not practical in p4099[0...2].

p4099[0...2] TM31 inputs/outputs, sampling time / TM31 I/O t_sample

TM31

Can be changed: C1(3)	**Calculated:** -	**Access level:** 3
Data type: FloatingPoint32	**Dynamic index:** -	**Func. diagram:** 1840, 9550
P-Group: Commands	**Units group:** -	**Unit selection:** -
Not for motor type: -	**Scaling:** -	**Expert list:** 1
Min	**Max**	**Factory setting**
0.00 [µs]	5000.00 [µs]	4000.00 [µs]

Description: Sets the sampling time for the inputs and outputs of Terminal Module 31 (TM31).

Index: [0] = Digital inputs/outputs (DI/DO)
[1] = Analog inputs (AI)
[2] = Analog outputs (AO)

© Siemens AG 2012 All Rights Reserved

Dependency: The parameter can only be modified for p0009 = 3, 29.
The sampling times can only be set as an integer multiple of the DRIVE-CLiQ clock cycle.
The minimum permissible sampling time is 125µs.
Refer to: p0009, r0110, r0111

Notice: The sampling times entered in index 0 (digital inputs/outputs) and index 2 (analog outputs) must always be greater than or equal to the sampling time in index 1 (analog inputs).

Note: The changed sampling time is immediately effective after a completed sub-boot (p0009 -> 0).
Parameter p4099[0] must never be equal to zero.

p4100[0...11] TM150 sensor type / TM150 sensor type

TM150

Can be changed: T	**Calculated:** -	**Access level:** 1
Data type: Integer16	**Dynamic index:** -	**Func. diagram:** 9626, 9627
P-Group: -	**Units group:** -	**Unit selection:** -
Not for motor type: -	**Scaling:** -	**Expert list:** 1
Min	**Max**	**Factory setting**
0	6	5

Description: Sets the sensor type for Terminal Module 150 (TM150)
This means that the temperature sensor type is selected and the evaluation is switched in.

Value:
0: Evaluation disabled
1: PTC thermistor
2: KTY84
4: Bimetallic NC contact
5: PT100
6: PT1000

Index:
[0] = Temperature channel 0
[1] = Temperature channel 1
[2] = Temperature channel 2
[3] = Temperature channel 3
[4] = Temperature channel 4
[5] = Temperature channel 5
[6] = Temperature channel 6
[7] = Temperature channel 7
[8] = Temperature channel 8
[9] = Temperature channel 9
[10] = Temperature channel 10
[11] = Temperature channel 11

Notice: For p4102[0...23] = 251 °C, evaluation of the corresponding threshold is deactivated.
For sensor type "PTC thermistor" and "Bimetallic NC contact" (p4100[0...11] = 1, 4), the following applies:
To activate the corresponding alarm or fault, p4102[0...23] must be set <= 250 °C.

Note: The temperature sensors are connected to the following terminals:
X531 = channel 0 (for 2x2 conductor evaluation, additionally channel 6)
X532 = channel 1 (for 2x2 conductor evaluation, additionally channel 7)
X533 = channel 2 (for 2x2 conductor evaluation, additionally channel 8)
X534 = channel 3 (for 2x2 conductor evaluation, additionally channel 9)
X535 = channel 4 (for 2x2 conductor evaluation, additionally channel 10)
X536 = channel 5 (for 2x2 conductor evaluation, additionally channel 11)
Details on the wiring are included in the parameter description for p4108.

p4100 TM31 sensor type / TM31 sensor type

TM31

Can be changed: T	**Calculated:** -	**Access level:** 1
Data type: Integer16	**Dynamic index:** -	**Func. diagram:** 9576
P-Group: -	**Units group:** -	**Unit selection:** -
Not for motor type: -	**Scaling:** -	**Expert list:** 1
Min	**Max**	**Factory setting**
0	2	0

Description: Sets the sensor type for Terminal Module 31 (TM31)

© Siemens AG 2012 All Rights Reserved

This means that the temperature sensor type is selected and the evaluation is switched in.

Value:
0: Evaluation disabled
1: PTC thermistor
2: KTY84

Notice: For p4102[0...1] = 251 °C, evaluation of the corresponding threshold is deactivated.
For sensor type "PTC thermistor" (p4100 = 1), the following applies:
To activate the corresponding alarm or fault, p4102[0...1] must be set <= 250 °C.

Note: The temperature sensor is connected at terminals X522.7(+) and X522.8(-).

r4101[0...11] TM150 sensor resistance / TM150 R_sensor

TM150

Can be changed: -	**Calculated:** -	**Access level:** 3
Data type: FloatingPoint32	**Dynamic index:** -	**Func. diagram:** 9626, 9627
P-Group: Terminals	**Units group:** -	**Unit selection:** -
Not for motor type: -	**Scaling:** PERCENT	**Expert list:** 1
Min	**Max**	**Factory setting**
- [ohm]	- [ohm]	- [ohm]

Description: Displays the actual resistance value of the temperature sensor connected at the Terminal Module.

Index:
[0] = Temperature channel 0
[1] = Temperature channel 1
[2] = Temperature channel 2
[3] = Temperature channel 3
[4] = Temperature channel 4
[5] = Temperature channel 5
[6] = Temperature channel 6
[7] = Temperature channel 7
[8] = Temperature channel 8
[9] = Temperature channel 9
[10] = Temperature channel 10
[11] = Temperature channel 11

Note: The maximum measurable resistance value is approx. 2500 Ohm.
For 1x2 and 2x2 conductor evaluation:
The actual sensor resistance is displayed in this parameter(i.e. the cable resistance (p4110) is taken into account).
The temperature sensors are connected to the following terminals:
X531 = channel 0 (for 2x2 conductor evaluation, additionally channel 6)
X532 = channel 1 (for 2x2 conductor evaluation, additionally channel 7)
X533 = channel 2 (for 2x2 conductor evaluation, additionally channel 8)
X534 = channel 3 (for 2x2 conductor evaluation, additionally channel 9)
X535 = channel 4 (for 2x2 conductor evaluation, additionally channel 10)
X536 = channel 5 (for 2x2 conductor evaluation, additionally channel 11)
Details on the wiring are included in the parameter description for p4108.

r4101 TM31 sensor resistance / TM31 R_sensor

TM31

Can be changed: -	**Calculated:** -	**Access level:** 3
Data type: Unsigned16	**Dynamic index:** -	**Func. diagram:** 9576
P-Group: Terminals	**Units group:** -	**Unit selection:** -
Not for motor type: -	**Scaling:** PERCENT	**Expert list:** 1
Min	**Max**	**Factory setting**
- [ohm]	- [ohm]	- [ohm]

Description: Displays the actual resistance value of the temperature sensor connected at the Terminal Module.

Note: The maximum measurable resistance value is approx. 2170 Ohm.
The temperature sensor is connected at terminals X522.7(+) and X522.8(-).

© Siemens AG 2012 All Rights Reserved

p4102[0...23] TM150 fault threshold/alarm threshold / TM150 F/A_thresh

TM150	**Can be changed:** T	**Calculated:** -	**Access level:** 1
	Data type: Integer16	**Dynamic index:** -	**Func. diagram:** 9626, 9627
	P-Group: -	**Units group:** -	**Unit selection:** -
	Not for motor type: -	**Scaling:** -	**Expert list:** 1
	Min	**Max**	**Factory setting**
	-99 [°C]	251 [°C]	251 [°C]

Description:

Sets the fault threshold/alarm threshold for Terminal Module 150 (TM150).

For alarms (even indices [0, 2, 4 ... 22]), the following applies:

- The corresponding alarm is initiated, if the temperature actual value associated with a temperature channel exceeds the associated alarm threshold (r4105[x] > p4102[2x]. In addition, the timer is started (p4103[x]).

- The alarm remains until the temperature actual value (r4105[x]) reaches or falls below the threshold value (p4102[2x] - hysteresis (p4118[x]).

For faults (uneven indices [1, 3, 5 ... 23]), the following applies:

- The corresponding fault is initiated, if the temperature actual value associated with a temperature channel exceeds the associated fault threshold (r4105[x] > p4102[2x+1] or the associated timer (p4103[x] has expired.

- The fault remains until the temperature actual value (r4105[x]) reaches or falls below the threshold value (p4102[2x+1]) - hysteresis (p4118[x]) and the fault has been acknowledged.

Index:

[0] = Channel 0 alarm threshold (A35211)
[1] = Channel 0 fault threshold (F35207)
[2] = Channel 1 alarm threshold (A35212)
[3] = Channel 1 fault threshold (F35208)
[4] = Channel 2 alarm threshold (A35213)
[5] = Channel 2 fault threshold (F35209)
[6] = Channel 3 alarm threshold (A35214)
[7] = Channel 3 fault threshold (F35210)
[8] = Channel 4 alarm threshold (A35410)
[9] = Channel 4 fault threshold (F35400)
[10] = Channel 5 alarm threshold (A35411)
[11] = Channel 5 fault threshold (F35401)
[12] = Channel 6 alarm threshold (A35412)
[13] = Channel 6 fault threshold (F35402)
[14] = Channel 7 alarm threshold (A35413)
[15] = Channel 7 fault threshold (F35403)
[16] = Channel 8 alarm threshold (A35414)
[17] = Channel 8 fault threshold (F35404)
[18] = Channel 9 alarm threshold (A35415)
[19] = Channel 9 fault threshold (F35405)
[20] = Channel 10 alarm threshold (A35416)
[21] = Channel 10 fault threshold (F35406)
[22] = Channel 11 alarm threshold (A35417)
[23] = Channel 11 fault threshold (F35407)

Dependency:

Refer to: p4103, r4104, r4105, p4118

Caution:

Faults F35207 ... F35210 and F35400 ... F35407 only result in the drive being shut down if at least one BICO interconnection exists between the drive and the TM150.

For p4102[0...23] = 251 °C, evaluation of the corresponding threshold is deactivated.

For sensor type "PTC thermistor" (p4100[0...11] = 1), the following applies:

To activate the corresponding alarm or fault, p4102[0...23] must be set <= 250 °C.

Note:

The hysteresis can be set in p4118[0...11].

© Siemens AG 2012 All Rights Reserved

p4102[0...1] TM31 fault threshold/alarm threshold / TM31 F/A_thresh

TM31

Can be changed: T	**Calculated:** -	**Access level:** 1
Data type: Integer16	**Dynamic index:** -	**Func. diagram:** 9576
P-Group: -	**Units group:** -	**Unit selection:** -
Not for motor type: -	**Scaling:** -	**Expert list:** 1
Min	**Max**	**Factory setting**
-48 [°C]	251 [°C]	[0] 100 [°C] [1] 120 [°C]

Description:
Sets the fault threshold/alarm threshold for Terminal Module 31 (TM31).
A35211 is initiated, if the temperature actual value r4105[0] > p4102[0]
F35207 is initiated if the temperature actual value r4105[0] > p4102[1] or timer p4103[0] has expired
For alarm A35211 the following applies:
- Remains until the temperature actual value (r4105) reaches or falls below the value (p4102[0] - hysteresis).
For fault F35207 the following applies:
- Remains until the temperature actual value (r4105) reaches or falls below the value (p4102[1] - hysteresis) and the fault has been acknowledged.
- The hysteresis value is 5 K and cannot be changed by the user.

Index:
[0] = Alarm threshold
[1] = Fault threshold

Dependency:
Refer to: r4104

Caution:
Fault F35207 only causes the drive to be shut down if there is at least one BICO interconnection between the drive and TM31.
For p4102[0...1] = 251 °C, evaluation of the corresponding threshold is deactivated.
For sensor type "PTC thermistor" (p4100 = 1), the following applies:
To activate the alarm or fault, p4102[0...1] must be set <= 250 °C.

p4103[0...11] TM150 delay time / TM150 t_delay

TM150

Can be changed: U, T	**Calculated:** -	**Access level:** 1
Data type: FloatingPoint32	**Dynamic index:** -	**Func. diagram:** 9626, 9627
P-Group: Motor	**Units group:** -	**Unit selection:** -
Not for motor type: -	**Scaling:** -	**Expert list:** 1
Min	**Max**	**Factory setting**
0.0 [s]	600.0 [s]	0.0 [s]

Description:
Sets the delay time for the output of the fault for the Terminal Module 150 (TM150).
The timer is started when the alarm threshold (e.g. p4102[0]) is exceeded.
If the delay time has expired and the alarm threshold has, in the meantime, not been fallen below, then the corresponding fault is output.
The fault can be acknowledged, if, after the delay time has expired, the alarm threshold is again fallen below.
For sensor type "KTY84", "PT100", "PT1000" (p4100[0...11] = 2, 5, 6) the following applies:
- If the fault threshold (e.g. p4102[1]) is exceeded before the delay time has expired, then the corresponding fault is immediately output.
For sensor type "PTC thermistor", "Bimetallic NC contact" (p4100[0...11] = 1, 4), the following applies:
- Alarm and fault threshold simultaneously respond. The fault is only issued after the delay time has expired.

Index:
[0] = Temperature channel 0
[1] = Temperature channel 1
[2] = Temperature channel 2
[3] = Temperature channel 3
[4] = Temperature channel 4
[5] = Temperature channel 5
[6] = Temperature channel 6
[7] = Temperature channel 7
[8] = Temperature channel 8
[9] = Temperature channel 9

© Siemens AG 2012 All Rights Reserved

[10] = Temperature channel 10
[11] = Temperature channel 11

Dependency: Refer to: p4102, r4104, r4105, p4118

Warning: The fault F35207 ... F35210 and F35400 ... 35407 only results in the drive being shut down if at least one BICO interconnection exists between the drive and the TM150.

Note: For p4103 = 0 s and sensor type "KTY84", "PT100", "PT1000" (p4100[0...11] = 2, 5, 6) the following applies:
- The corresponding fault can only be initiated via the fault threshold (output of the timer is always a logical 0).

For p4103 = 0 s and sensor type "PTC thermistor", "Bimetallic NC contact" (p4100[0...11] = 1, 4), the following applies:
- The corresponding alarm and fault are simultaneously output (delay time = 0 s).

p4103 TM31 temperature evaluation delay time / TM31 temp t_delay

TM31

Can be changed: U, T	**Calculated:** -	**Access level:** 1
Data type: FloatingPoint32	**Dynamic index:** -	**Func. diagram:** 9576
P-Group: Motor	**Units group:** -	**Unit selection:** -
Not for motor type: -	**Scaling:** -	**Expert list:** 1
Min	**Max**	**Factory setting**
0.000 [ms]	600000.000 [ms]	0.000 [ms]

Description: Sets the delay time for the output of the fault for the Terminal Module 31 (TM31).

The timer is started when the alarm threshold (p4102[0]) is exceeded.

If the delay time has expired and the alarm threshold has, in the meantime, not been fallen below, then fault F35207 is output.

The fault can be acknowledged, if, after the delay time has expired, the alarm threshold is again fallen below.

For sensor type "KTY84" (p4100 = 2), the following applies:

If the fault threshold (p4102[1]) is exceeded before the delay time has expired, then fault F35207 is immediately output.

For sensor type "PTC thermistor" (p4100 = 1), the following applies:

- Alarm and fault threshold simultaneously respond. The fault is only issued after the delay time has expired.

Dependency: Refer to: r4104

Warning: Fault F35207 only causes the drive to be shut down if there is at least one BICO interconnection between the drive and TM31.

Note: With p4103 = 0 ms, the timer is de-activated and only the fault threshold is effective.

r4104.0...23 BO: TM150 temperature evaluation, status / TM150 temp status

TM150

Can be changed: -	**Calculated:** -	**Access level:** 1
Data type: Unsigned32	**Dynamic index:** -	**Func. diagram:** 9626, 9627
P-Group: Terminals	**Units group:** -	**Unit selection:** -
Not for motor type: -	**Scaling:** -	**Expert list:** 1
Min	**Max**	**Factory setting**
-	-	-

Description: Display and binector output for the status for the Terminal Module 150 (TM150).

Bit field:

Bit	Signal name	1 signal	0 signal	FP
00	Channel 0 alarm present	Yes	No	9626
01	Channel 0 fault present	Yes	No	9626
02	Channel 1 alarm present	Yes	No	9626
03	Channel 1 fault present	Yes	No	9626
04	Channel 2 alarm present	Yes	No	9626
05	Channel 2 fault present	Yes	No	9626
06	Channel 3 alarm present	Yes	No	9626
07	Channel 3 fault present	Yes	No	9626
08	Channel 4 alarm present	Yes	No	9626
09	Channel 4 fault present	Yes	No	9626

© Siemens AG 2012 All Rights Reserved

10	Channel 5 alarm present	Yes	No	9626
11	Channel 5 fault present	Yes	No	9626
12	Channel 6 alarm present	Yes	No	9627
13	Channel 6 fault present	Yes	No	9627
14	Channel 7 alarm present	Yes	No	9627
15	Channel 7 fault present	Yes	No	9627
16	Channel 8 alarm present	Yes	No	9627
17	Channel 8 fault present	Yes	No	9627
18	Channel 9 alarm present	Yes	No	9627
19	Channel 9 fault present	Yes	No	9627
20	Channel 10 alarm present	Yes	No	9627
21	Channel 10 fault present	Yes	No	9627
22	Channel 11 alarm present	Yes	No	9627
23	Channel 11 fault present	Yes	No	9627

Dependency: Refer to: p4102, p4103, r4105, p4118

r4104.0...1 BO: TM31 temperature evaluation, status / TM31 temp status

TM31

Can be changed: - **Calculated:** - **Access level:** 1
Data type: Unsigned16 **Dynamic index:** - **Func. diagram:** 1840, 9576
P-Group: Terminals **Units group:** - **Unit selection:** -
Not for motor type: - **Scaling:** - **Expert list:** 1

Min	Max	Factory setting
-	-	-

Description: Display and binector output for the status for the Terminal Module 31 (TM31).

Bit field:

Bit	Signal name	1 signal	0 signal	FP
00	Alarm is present	Yes	No	-
01	Fault is present	Yes	No	-

Dependency: Refer to: p4102

r4105[0...11] CO: TM150 temperature actual value / TM150 temp_act val

TM150

Can be changed: - **Calculated:** - **Access level:** 1
Data type: FloatingPoint32 **Dynamic index:** - **Func. diagram:** 9626, 9627
P-Group: Terminals **Units group:** - **Unit selection:** -
Not for motor type: - **Scaling:** p2006 **Expert list:** 1

Min	Max	Factory setting
- [°C]	- [°C]	- [°C]

Description: Displays the temperature actual value for the Terminal Module 150 (TM150)

Index:
[0] = Temperature channel 0
[1] = Temperature channel 1
[2] = Temperature channel 2
[3] = Temperature channel 3
[4] = Temperature channel 4
[5] = Temperature channel 5
[6] = Temperature channel 6
[7] = Temperature channel 7
[8] = Temperature channel 8
[9] = Temperature channel 9
[10] = Temperature channel 10
[11] = Temperature channel 11

Dependency: For sensor type "PTC thermistor" and "Bimetallic NC contact" (p4100[0...11] = 1, 4), the following applies:
- below the nominal response temperature, r4105[0...11] = -50 °C.
- above the nominal response temperature, r4105[0...11] = 250 °C.

For sensor type "KTY84", "PT100", "PT1000" (p4100[0...11] = 2, 5, 6) the following applies:
- the displayed value corresponds to the temperature actual value.

Refer to: p4100, p4111, r4112, r4113, r4114

© Siemens AG 2012 All Rights Reserved

Note: r4105[0...11] = -300 °C is displayed in the following cases:
- temperature actual value invalid (F35920 ... F35931 output).
- no sensor selected (p4100[0...11] = 0).

The temperature actual values can be grouped using p4111[0...2] and the maximum value, minimum value as well as the average value for each group evaluated (r4112[0...2], r4113[0...2], r4114[0...2]).

r4105 CO: TM31 temperature actual value / TM31 temp_act val

TM31

Can be changed: -	**Calculated:** -	**Access level:** 1
Data type: FloatingPoint32	**Dynamic index:** -	**Func. diagram:** 1840, 9576
P-Group: Terminals	**Units group:** -	**Unit selection:** -
Not for motor type: -	**Scaling:** p2006	**Expert list:** 1
Min	**Max**	**Factory setting**
- [°C]	- [°C]	- [°C]

Description: Displays the temperature actual value for the Terminal Module 31 (TM31)

Dependency: For sensor type "PTC thermistor" (p4100 = 1), the following applies:
- below the nominal response temperature, r4105 = -50°C.
- above the nominal response temperature, r4105 = 250 °C.

For sensor type "KTY84" (p4100 = 2), the following applies:
- the displayed value corresponds to the temperature actual value.

Refer to: p4100

Note: r4105 = -300 °C is displayed in the following cases:
- temperature actual value invalid (F35920 output).
- no sensor selected (p4100 = 0).

The temperature sensor is connected at terminals X522.7(+) and X522.8(-).

p4108[0...5] TM150 terminal block measuring method / TM150 meas method

TM150

Can be changed: T	**Calculated:** -	**Access level:** 1
Data type: Integer16	**Dynamic index:** -	**Func. diagram:** 9625, 9626, 9627
P-Group: -	**Units group:** -	**Unit selection:** -
Not for motor type: -	**Scaling:** -	**Expert list:** 1
Min	**Max**	**Factory setting**
0	3	1

Description: Sets the measuring method for the terminal block X531 ... X536 for the Terminal Module 150 (TM150).

Re p4108[0...5] = 0 (1x2 wire evaluation):
- the temperature sensor is connected at terminals 1(+) and 2(-).

Re p4108[0...5] = 1 (2x2 wire evaluation):
- The first temperature sensor is connected at terminals 1(+) and 2(-).
- The second temperature sensor is connected at terminals 3(+) and 4(-).

Re p4108[0...5] = 2 (3 wire evaluation):
- the temperature sensor is connected at terminals 3(+) and 4(-).
- the measuring conductor is connected at terminal 1(+).
- terminals 2(-) and 4(-) must be jumpered.

Re p4108[0...5] = 3 (4 wire evaluation):
- the temperature sensor is connected at terminals 3(+) and 4(-).
- the measuring conductor is connected at terminals 1(+) and 2(-).

Value:
0: 1x2 conductor evaluation
1: 2x2 conductor evaluation
2: 3 conductor evaluation
3: 4 conductor evaluation

Index:
[0] = X531
[1] = X532
[2] = X533
[3] = X534

© Siemens AG 2012 All Rights Reserved

[4] = X535
[5] = X536

Note: The temperature sensors are connected to the following terminals:
X531 = channel 0 (for 2x2 conductor evaluation, additionally channel 6)
X532 = channel 1 (for 2x2 conductor evaluation, additionally channel 7)
X533 = channel 2 (for 2x2 conductor evaluation, additionally channel 8)
X534 = channel 3 (for 2x2 conductor evaluation, additionally channel 9)
X535 = channel 4 (for 2x2 conductor evaluation, additionally channel 10)
X536 = channel 5 (for 2x2 conductor evaluation, additionally channel 11)
Re p4108[0...5] = 0, 2, 3 (1x2, 3, 4 wire evaluation):
The temperature channel belonging to the terminal block with the higher number is automatically deactivated (e.g. for X531 with 3-wire evaluation, channel 6 is deactivated).

p4109[0...11] TM150 conductor resistance measurement / TM150 R_cond meas

TM150

Can be changed: T	**Calculated:** -	**Access level:** 1
Data type: Integer16	**Dynamic index:** -	**Func. diagram:** 9626, 9627
P-Group: -	**Units group:** -	**Unit selection:** -
Not for motor type: -	**Scaling:** -	**Expert list:** 1
Min	**Max**	**Factory setting**
0	1	0

Description: Setting to start the measurement of the conductor resistance for a channel for the Terminal Module 150 (TM150).
For a 2 conductor evaluation, the total conductor resistance is measured and saved. During the temperature evaluation, the temperature actual value is automatically calibrated using the measured cable resistance.
Procedure:
1. Select the measuring method (1x2/2x2) for the corresponding terminal block (p4108[0...5] = 0, 1).
2. Set the required sensor type for the corresponding channel (p4100[x] = 1 ... 6, x = 0...5 or 0...11).
3. Jumper the sensor to be connected (short-circuit the sensor conductor close to the sensor).
4. Connect the sensor conductors to the appropriate terminals 1(+), 2(-) or 3(+), 4(-).
5. For the corresponding channel, start the measurement of the conductor resistance (p4109[x] = 1).
6. After p4109[x] = 0, check the measured resistance value in p4110[x].
7. Remove the jumper across the temperature sensor.

Value:
0: Inactive
1: Start

Index:
[0] = Temperature channel 0
[1] = Temperature channel 1
[2] = Temperature channel 2
[3] = Temperature channel 3
[4] = Temperature channel 4
[5] = Temperature channel 5
[6] = Temperature channel 6
[7] = Temperature channel 7
[8] = Temperature channel 8
[9] = Temperature channel 9
[10] = Temperature channel 10
[11] = Temperature channel 11

Dependency: Refer to: p4100, p4108, p4110

Notice: Conductor resistance measurement is only possible for 1x2 or 2x2 conductor evaluation (p4108[0...5] = 0, 1).

Note: The conductor resistance value can be also directly entered into p4110[0...11].
The automatic conductor calibration for 1x2 and 2x2 conductor evaluation is always performed with the value in p4110[0...11].

© Siemens AG 2012 All Rights Reserved

p4110[0...11] TM150 conductor resistance value / TM150 R_cond value

TM150	**Can be changed:** T	**Calculated:** -	**Access level:** 1
	Data type: FloatingPoint32	**Dynamic index:** -	**Func. diagram:** 9626, 9627
	P-Group: -	**Units group:** -	**Unit selection:** -
	Not for motor type: -	**Scaling:** -	**Expert list:** 1
	Min	**Max**	**Factory setting**
	0.00 [ohm]	3000.00 [ohm]	0.00 [ohm]

Description: Sets and displays the cable resistance for Terminal Module 150 (TM150).

The value is used for the automatic cable calibration.

The value is automatically set by starting the conductor resistance measurement (p4109[0...11]) of the corresponding channel.

Index:
[0] = Temperature channel 0
[1] = Temperature channel 1
[2] = Temperature channel 2
[3] = Temperature channel 3
[4] = Temperature channel 4
[5] = Temperature channel 5
[6] = Temperature channel 6
[7] = Temperature channel 7
[8] = Temperature channel 8
[9] = Temperature channel 9
[10] = Temperature channel 10
[11] = Temperature channel 11

Dependency: Refer to: p4109

Notice: Conductor resistance measurement is only possible for 1x2 or 2x2 conductor evaluation (p4108[0...5] = 0, 1).

Note: Automatic conductor calibration is deactivated using p4110[0...11] = 0.

p4111[0...2] TM150 group channel assignment / TM150 grp channel

TM150	**Can be changed:** T	**Calculated:** -	**Access level:** 1
	Data type: Unsigned16	**Dynamic index:** -	**Func. diagram:** 9625
	P-Group: -	**Units group:** -	**Unit selection:** -
	Not for motor type: -	**Scaling:** -	**Expert list:** 1
	Min	**Max**	**Factory setting**
	-	-	0000 0000 0000 0000 bin

Description: Assigns the temperature channels to groups for the Terminal Module 150 (TM150)

For each group, the following calculated values are provided from the temperature actual values (r4105[0...11]):

- Maximum value (r4112[0...2])
- Minimum value (r4113[0...2])
- average value (r4114[0...2])

Index:
[0] = Group 0
[1] = Group 1
[2] = Group 2

Bit field:

Bit	Signal name	1 signal	0 signal	FP
00	Temperature channel 0	Yes	No	-
01	Temperature channel 1	Yes	No	-
02	Temperature channel 2	Yes	No	-
03	Temperature channel 3	Yes	No	-
04	Temperature channel 4	Yes	No	-
05	Temperature channel 5	Yes	No	-
06	Temperature channel 6	Yes	No	-
07	Temperature channel 7	Yes	No	-
08	Temperature channel 8	Yes	No	-
09	Temperature channel 9	Yes	No	-
10	Temperature channel 10	Yes	No	-
11	Temperature channel 11	Yes	No	-

Dependency: Refer to: r4105, r4112, r4113, r4114

© Siemens AG 2012 All Rights Reserved

Caution: When forming groups, it must be ensured that in one particular group, only temperature channels with the following sensor types are included:
- "KTY84", "PT100", "PT1000" (p4100[0...11] = 2, 5, 6), real temperature actual value
or alternatively
- "PTC thermistor", "bimetallic NC contact" (p4100[0...11] = 1, 4), fictitious temperature actual value (-50 °C, 250 °C)
If these sensor types are combined within one group, then the calculated values for maximum, minimum and average value will be falsified.

Note: Active and inactive temperature channels can be included in one group. However, when calculating the values (r4112, r4113, r4114) only the active temperature channels with valid actual value are taken into account (r4105[0...11] not equal to -300 °C).

r4112[0...2] CO: TM150 group temperature actual value maximum value / TM150 grp temp max

TM150

Can be changed: -	**Calculated:** -	**Access level:** 1
Data type: FloatingPoint32	**Dynamic index:** -	**Func. diagram:** 9625
P-Group: -	**Units group:** -	**Unit selection:** -
Not for motor type: -	**Scaling:** -	**Expert list:** 1
Min	**Max**	**Factory setting**
- [°C]	- [°C]	- [°C]

Description: Display and connector output for the maximum value of each group for the Terminal Module 150 (TM150).
This value is calculated from the actual temperature values (r4105[0...11]) of each group.

Recommend.: The following connector inputs can use these connector outputs for interconnection:
- CI: p0603
- CI: p0608[0...3]
- CI: p0609[0...3]
- CI: p2051

Index: [0] = Group 0
[1] = Group 1
[2] = Group 2

Dependency: Refer to: r4105, p4111, r4113, r4114

r4113[0...2] CO: TM150 group temperature actual value minimum value / TM150 grp temp min

TM150

Can be changed: -	**Calculated:** -	**Access level:** 1
Data type: FloatingPoint32	**Dynamic index:** -	**Func. diagram:** 9625
P-Group: -	**Units group:** -	**Unit selection:** -
Not for motor type: -	**Scaling:** -	**Expert list:** 1
Min	**Max**	**Factory setting**
- [°C]	- [°C]	- [°C]

Description: Display and connector output for the minimum value of each group for the Terminal Module 150 (TM150).
This value is calculated from the actual temperature values (r4105[0...11]) of each group.

Recommend.: The following connector inputs can use these connector outputs for interconnection:
- CI: p0603
- CI: p0608[0...3]
- CI: p0609[0...3]
- CI: p2051

Index: [0] = Group 0
[1] = Group 1
[2] = Group 2

Dependency: Refer to: r4105, p4111, r4112, r4114

© Siemens AG 2012 All Rights Reserved

r4114[0...2] CO: TM150 group temperature average actual value / TM150 grp temp av

TM150

Can be changed: -	**Calculated:** -	**Access level:** 1
Data type: FloatingPoint32	**Dynamic index:** -	**Func. diagram:** 9625
P-Group: -	**Units group:** -	**Unit selection:** -
Not for motor type: -	**Scaling:** -	**Expert list:** 1
Min	**Max**	**Factory setting**
- [°C]	- [°C]	- [°C]

Description: Display and connector output for the average value of each group for the Terminal Module 150 (TM150).
This value is calculated from the actual temperature values (r4105[0...11]) of each group.

Recommend.: The following connector inputs can use these connector outputs for interconnection:
- CI: p0603
- CI: p0608[0...3]
- CI: p0609[0...3]
- CI: p2051

Index: [0] = Group 0
[1] = Group 1
[2] = Group 2

Dependency: Refer to: r4105, p4111, r4112, r4113

Note: If one group is assigned sensor type "PTC" or "bimetal NC contact", then the average value -300 °C is output.

p4117[0...2] TM150 group sensor error effect / TM150 error effect

TM150

Can be changed: U, T	**Calculated:** -	**Access level:** 1
Data type: Integer16	**Dynamic index:** -	**Func. diagram:** 9625
P-Group: -	**Units group:** -	**Unit selection:** -
Not for motor type: -	**Scaling:** -	**Expert list:** 1
Min	**Max**	**Factory setting**
0	1	0

Description: Sets the effect for an error of a sensor of a group for Terminal Module TM150 (TM150).
For p4117 = 0, the following applies:
The defective temperature sensor assigned to a group is not take into account when forming the group.
For p4117 = 1, the following applies:
For a sensor error, for the maximum value, minimum value and average value of the corresponding group, a value of -300 °C is output.

Value:
0: Skip sensor
1: Output value = -300 °C

Index: [0] = Group 0
[1] = Group 1
[2] = Group 2

Dependency: Refer to: r4105, p4111, r4112, r4113, r4114

p4118[0...11] TM150 fault threshold/alarm threshold hysteresis / TM150 thresh hyst

TM150

Can be changed: T	**Calculated:** -	**Access level:** 1
Data type: Unsigned16	**Dynamic index:** -	**Func. diagram:** 9626, 9627
P-Group: -	**Units group:** -	**Unit selection:** -
Not for motor type: -	**Scaling:** -	**Expert list:** 1
Min	**Max**	**Factory setting**
0 [K]	50 [K]	5 [K]

Description: Sets the hysteresis for the fault threshold/alarm threshold (p4102[0...23]) for the Terminal Module 150 (TM150).

Index: [0] = Temperature channel 0
[1] = Temperature channel 1
[2] = Temperature channel 2
[3] = Temperature channel 3
[4] = Temperature channel 4

© Siemens AG 2012 All Rights Reserved

[5] = Temperature channel 5
[6] = Temperature channel 6
[7] = Temperature channel 7
[8] = Temperature channel 8
[9] = Temperature channel 9
[10] = Temperature channel 10
[11] = Temperature channel 11

Dependency: Refer to: p4102, p4103, r4104, r4105

Note: The following applies for a corresponding alarm:

- Remains until the temperature actual value (r4105[x]) reaches or falls below the threshold value (p4102[2x] - hysteresis (p4118[x]).

The following applies for a corresponding fault:

- Remains until the temperature actual value (r4105[x]) reaches or falls below the threshold value (p4102[2x+1]) - hysteresis (p4118[x]) and the fault has been acknowledged.

p4119[0...11] TM150 activate/deactivate smoothing / TM150 smooth act

TM150	**Can be changed:** T	**Calculated:** -	**Access level:** 1
	Data type: Integer16	**Dynamic index:** -	**Func. diagram:** 9626, 9627
	P-Group: -	**Units group:** -	**Unit selection:** -
	Not for motor type: -	**Scaling:** -	**Expert list:** 1
	Min	**Max**	**Factory setting**
	0	1	0

Description: Setting to activate/deactivate the filter to smooth the temperature signal for the Terminal Module 150 (TM150).

The smoothing is realized with a 1st order lowpass filter

The effective smoothing time constant depends on the number of channels that are simultaneously active and is displayed in r4120.

Value:
0: Filter deactivated
1: Filter activated

Index:
[0] = Temperature channel 0
[1] = Temperature channel 1
[2] = Temperature channel 2
[3] = Temperature channel 3
[4] = Temperature channel 4
[5] = Temperature channel 5
[6] = Temperature channel 6
[7] = Temperature channel 7
[8] = Temperature channel 8
[9] = Temperature channel 9
[10] = Temperature channel 10
[11] = Temperature channel 11

Dependency: Refer to: r4120

r4120 TM150 temperature filter time constant / TM150 temp_filt T

TM150	**Can be changed:** -	**Calculated:** -	**Access level:** 1
	Data type: Unsigned16	**Dynamic index:** -	**Func. diagram:** 9626, 9627
	P-Group: -	**Units group:** -	**Unit selection:** -
	Not for motor type: -	**Scaling:** -	**Expert list:** 1
	Min	**Max**	**Factory setting**
	- [ms]	- [ms]	- [ms]

Description: Displays the smoothing time constant for the temperature filter for Terminal Module 150 (TM150).

Dependency: Refer to: r4105, p4111, r4112, r4113

Note: The time constant lies in the range from 80 to 1000 ms and depends on the number of channels that are simultaneously active.

© Siemens AG 2012 All Rights Reserved

p4121 TM150 filter rated line frequency / TM150 filt f_line

TM150

Can be changed: T	**Calculated:** -	**Access level:** 1
Data type: Integer16	**Dynamic index:** -	**Func. diagram:** 9626, 9627
P-Group: -	**Units group:** -	**Unit selection:** -
Not for motor type: -	**Scaling:** -	**Expert list:** 1
Min	**Max**	**Factory setting**
0	1	0

Description: Sets the rated line frequency for the filter to skip the line frequency for Terminal Module 150 (TM150).

Value:
0: 50 Hz
1: 60 Hz

p4600[0...n] Motor temperature sensor 1 sensor type / Temp_sens 1 type

VECTOR_G

Can be changed: C2(3), U, T	**Calculated:** -	**Access level:** 2
Data type: Integer16	**Dynamic index:** EDS, p0140	**Func. diagram:** 8016
P-Group: Motor	**Units group:** -	**Unit selection:** -
Not for motor type: -	**Scaling:** -	**Expert list:** 1
Min	**Max**	**Factory setting**
0	32	0

Description: Sets the sensor type of the first temperature sensor for the motor temperature monitoring.

Value:
0: No sensor
10: PTC fault
11: PTC alarm
12: PTC alarm & timer
20: KTY84, PT100, PT1000
30: Bimetallic NC contact fault
31: Bimetallic NC contact alarm
32: Bimetallic NC contact alarm & timer

Dependency: Refer to: r0458, p0600, p0601

Note: This parameter is effective only when p0601 = 10.
PTC thermistor: Tripping resistance = 1650 Ohm
Information on using temperature sensors is provided in the following literature:
- hardware description of the appropriate components
- SINAMICS S120 Commissioning Manual

p4601[0...n] Motor temperature sensor 2 sensor type / Temp_sens 2 type

VECTOR_G

Can be changed: C2(3), U, T	**Calculated:** -	**Access level:** 2
Data type: Integer16	**Dynamic index:** EDS, p0140	**Func. diagram:** 8016
P-Group: Motor	**Units group:** -	**Unit selection:** -
Not for motor type: -	**Scaling:** -	**Expert list:** 1
Min	**Max**	**Factory setting**
0	32	0

Description: Sets the sensor type of the second temperature sensor for the motor temperature monitoring.

Value:
0: No sensor
10: PTC fault
11: PTC alarm
12: PTC alarm & timer
20: KTY84, PT100, PT1000
30: Bimetallic NC contact fault
31: Bimetallic NC contact alarm
32: Bimetallic NC contact alarm & timer

Dependency: Refer to: r0458, p0600, p0601

Note: This parameter is effective only when p0601 = 10.
Terminals for KTY84: X200.1, X200.2
PTC thermistor: Tripping resistance = 1650 Ohm

© Siemens AG 2012 All Rights Reserved

Information on using temperature sensors is provided in the following literature:
- hardware description of the appropriate components
- SINAMICS S120 Commissioning Manual

p4602[0...n] Motor temperature sensor 3 sensor type / Temp_sens 3 type

VECTOR_G	**Can be changed:** C2(3), U, T	**Calculated:** -	**Access level:** 2
	Data type: Integer16	**Dynamic index:** EDS, p0140	**Func. diagram:** 8016
	P-Group: Motor	**Units group:** -	**Unit selection:** -
	Not for motor type: -	**Scaling:** -	**Expert list:** 1
	Min	**Max**	**Factory setting**
	0	32	0

Description: Sets the sensor type of the third temperature sensor for the motor temperature monitoring.

Value:
0: No sensor
10: PTC fault
11: PTC alarm
12: PTC alarm & timer
20: KTY84, PT100, PT1000
30: Bimetallic NC contact fault
31: Bimetallic NC contact alarm
32: Bimetallic NC contact alarm & timer

Dependency: Refer to: r0458, p0600, p0601

Note: This parameter is effective only when p0601 = 10.
Terminals for PTC triplet and bimetallic: X200.3, X200.4
PTC thermistor: Tripping resistance = 1650 Ohm
Information on using temperature sensors is provided in the following literature:
- hardware description of the appropriate components
- SINAMICS S120 Commissioning Manual

p4603[0...n] Motor temperature sensor 4 sensor type / Temp_sens 4 type

VECTOR_G	**Can be changed:** C2(3), U, T	**Calculated:** -	**Access level:** 2
	Data type: Integer16	**Dynamic index:** EDS, p0140	**Func. diagram:** 8016
	P-Group: Motor	**Units group:** -	**Unit selection:** -
	Not for motor type: -	**Scaling:** -	**Expert list:** 1
	Min	**Max**	**Factory setting**
	0	32	0

Description: Sets the sensor type of the fourth temperature sensor for the motor temperature monitoring.

Value:
0: No sensor
10: PTC fault
11: PTC alarm
12: PTC alarm & timer
20: KTY84, PT100, PT1000
30: Bimetallic NC contact fault
31: Bimetallic NC contact alarm
32: Bimetallic NC contact alarm & timer

Dependency: Refer to: r0458, p0600, p0601

Note: This parameter is effective only when p0601 = 10.
Terminals for PTC triplet: X200.5, X200.6
PTC thermistor: Tripping resistance = 1650 Ohm
Information on using temperature sensors is provided in the following literature:
- hardware description of the appropriate components
- SINAMICS S120 Commissioning Manual

© Siemens AG 2012 All Rights Reserved

p4610[0...n] Motor temperature sensor 1 sensor type MDS / Temp sens1 typ MDS

VECTOR_G	**Can be changed:** C2(3), U, T	**Calculated:** -	**Access level:** 2
	Data type: Integer16	**Dynamic index:** MDS, p0130	**Func. diagram:** 8016
	P-Group: Motor	**Units group:** -	**Unit selection:** -
	Not for motor type: -	**Scaling:** -	**Expert list:** 1
	Min	**Max**	**Factory setting**
	0	32	10

Description: Sets the sensor type of the first temperature sensor for the motor temperature monitoring.

Value:
0: No sensor
10: PTC fault
11: PTC alarm
12: PTC alarm & timer
20: KTY84, PT100, PT1000
30: Bimetallic NC contact fault
31: Bimetallic NC contact alarm
32: Bimetallic NC contact alarm & timer

Dependency: Refer to: r0458, p0600, p0601

Note: This parameter is effective only when p0601 = 11.
PTC thermistor: Tripping resistance = 1650 Ohm
Information on using temperature sensors is provided in the following literature:
- hardware description of the appropriate components
- SINAMICS S120 Commissioning Manual

p4611[0...n] Motor temperature sensor 2 sensor type MDS / Temp sens2 typ MDS

VECTOR_G	**Can be changed:** C2(3), U, T	**Calculated:** -	**Access level:** 2
	Data type: Integer16	**Dynamic index:** MDS, p0130	**Func. diagram:** 8016
	P-Group: Motor	**Units group:** -	**Unit selection:** -
	Not for motor type: -	**Scaling:** -	**Expert list:** 1
	Min	**Max**	**Factory setting**
	0	32	10

Description: Sets the sensor type of the second temperature sensor for the motor temperature monitoring.

Value:
0: No sensor
10: PTC fault
11: PTC alarm
12: PTC alarm & timer
20: KTY84, PT100, PT1000
30: Bimetallic NC contact fault
31: Bimetallic NC contact alarm
32: Bimetallic NC contact alarm & timer

Dependency: Refer to: r0458, p0600, p0601

Note: This parameter is effective only when p0601 = 11.
PTC thermistor: Tripping resistance = 1650 Ohm
Information on using temperature sensors is provided in the following literature:
- hardware description of the appropriate components
- SINAMICS S120 Commissioning Manual

p4612[0...n] Motor temperature sensor 3 sensor type MDS / Temp sens3 typ MDS

VECTOR_G	**Can be changed:** C2(3), U, T	**Calculated:** -	**Access level:** 2
	Data type: Integer16	**Dynamic index:** MDS, p0130	**Func. diagram:** 8016
	P-Group: Motor	**Units group:** -	**Unit selection:** -
	Not for motor type: -	**Scaling:** -	**Expert list:** 1
	Min	**Max**	**Factory setting**
	0	32	10

Description: Sets the sensor type of the third temperature sensor for the motor temperature monitoring.

© Siemens AG 2012 All Rights Reserved

Value:
0: No sensor
10: PTC fault
11: PTC alarm
12: PTC alarm & timer
20: KTY84, PT100, PT1000
30: Bimetallic NC contact fault
31: Bimetallic NC contact alarm
32: Bimetallic NC contact alarm & timer

Dependency: Refer to: r0458, p0600, p0601

Note: This parameter is effective only when p0601 = 11.
PTC thermistor: Tripping resistance = 1650 Ohm
Information on using temperature sensors is provided in the following literature:
- hardware description of the appropriate components
- SINAMICS S120 Commissioning Manual

p4613[0...n] Motor temperature sensor 4 sensor type MDS / Temp sens4 typ MDS

VECTOR_G

Can be changed: C2(3), U, T	**Calculated:** -	**Access level:** 2
Data type: Integer16	**Dynamic index:** MDS, p0130	**Func. diagram:** 8016
P-Group: Motor	**Units group:** -	**Unit selection:** -
Not for motor type: -	**Scaling:** -	**Expert list:** 1
Min	**Max**	**Factory setting**
0	32	10

Description: Sets the sensor type of the fourth temperature sensor for the motor temperature monitoring.

Value:
0: No sensor
10: PTC fault
11: PTC alarm
12: PTC alarm & timer
20: KTY84, PT100, PT1000
30: Bimetallic NC contact fault
31: Bimetallic NC contact alarm
32: Bimetallic NC contact alarm & timer

Dependency: Refer to: r0458, p0600, p0601

Note: This parameter is effective only when p0601 = 11.
PTC thermistor: Tripping resistance = 1650 Ohm
Information on using temperature sensors is provided in the following literature:
- hardware description of the appropriate components
- SINAMICS S120 Commissioning Manual

r4620[0...3] Motor temperature measured / Mot_temp meas

VECTOR_G

Can be changed: -	**Calculated:** -	**Access level:** 3
Data type: FloatingPoint32	**Dynamic index:** -	**Func. diagram:** -
P-Group: Displays, signals	**Units group:** 21_1	**Unit selection:** p0505
Not for motor type: -	**Scaling:** p2006	**Expert list:** 1
Min	**Max**	**Factory setting**
- [°C]	- [°C]	- [°C]

Description: Displays the actual temperature in the motor measured through temperature channels 1 ... 4.

Index:
[0] = Temperature channel 1
[1] = Temperature channel 2
[2] = Temperature channel 3
[3] = Temperature channel 4

Note: For a value not equal to -200.0 °C, the following applies:
- this temperature display is valid.
- a KTY sensor is connected.
For a value equal to -200.0 °C, the following applies:
- this temperature display is not valid (temperature sensor error).
- A PTC sensor or bimetallic NC contact is connected.

© Siemens AG 2012 All Rights Reserved

- the temperature sensor evaluation is de-activated (p0600 = 0 or p0601 = 0).
- the sensor channel is de-activated (p460x = 0 or p461x = 0).

r4640[0...95] Encoder diagnostics state machine / Enc diag stat_ma

ENC, VECTOR_G	**Can be changed:** -	**Calculated:** -	**Access level:** 4
	Data type: Unsigned32	**Dynamic index:** -	**Func. diagram:** -
	P-Group: Encoder	**Units group:** -	**Unit selection:** -
	Not for motor type: -	**Scaling:** -	**Expert list:** 1
	Min	**Max**	**Factory setting**
	-	-	-

Description: Displays the encoder diagnostics for the PROFIdrive interface.

p4650 Encoder functional reserve component number / Enc fct_res num

CU_G130_DP, CU_G130_PN, CU_G150_DP, CU_G150_PN	**Can be changed:** U, T	**Calculated:** -	**Access level:** 3
	Data type: Unsigned16	**Dynamic index:** -	**Func. diagram:** -
	P-Group: Displays, signals	**Units group:** -	**Unit selection:** -
	Not for motor type: -	**Scaling:** -	**Expert list:** 1
	Min	**Max**	**Factory setting**
	0	399	0

Description: Sets the component number (p0141) of the encoder whose functional reserve is to be displayed (r4651).

Dependency: Refer to: r4651

r4651[0...3] Encoder functional reserve / Enc fct_reserve

CU_G130_DP, CU_G130_PN, CU_G150_DP, CU_G150_PN	**Can be changed:** -	**Calculated:** -	**Access level:** 3
	Data type: FloatingPoint32	**Dynamic index:** -	**Func. diagram:** -
	P-Group: Displays, signals	**Units group:** -	**Unit selection:** -
	Not for motor type: -	**Scaling:** -	**Expert list:** 1
	Min	**Max**	**Factory setting**
	- [%]	- [%]	- [%]

Description: Displays the functional reserve of the encoder selected via p4650.
0 ... 25 %:
The function limit has been reached. A service is recommended.
26 ... 100 %:
The encoder is working in the specified range.

Index:
[0] = Incremental
[1] = Reserved
[2] = Abs track
[3] = Code conn

Dependency: Refer to: p4650

Note: Value = 999 means:
- the component specified in p4650 is not connected
- the encoder does not support the display of the functional reserve

p4652 XIST1_ERW reset mode / XIST1_ERW res mode

ENC	**Can be changed:** C1(3)	**Calculated:** -	**Access level:** 3
	Data type: Integer16	**Dynamic index:** -	**Func. diagram:** 4750
	P-Group: -	**Units group:** -	**Unit selection:** -
	Not for motor type: -	**Scaling:** -	**Expert list:** 1
	Min	**Max**	**Factory setting**
	0	3	0

Description: Sets the mode to reset the actual value in XIST_ERW (CO: r4653).

Value:
0: Inactive
1: Reset with zero mark

© Siemens AG 2012 All Rights Reserved

2: Reset with BICO
3: Reset with selected zero mark

Dependency: Refer to: r4653, r4654, p4655

Note: If value = 1:
The value in XIST1_ERW is reset when passing every zero mark.
If value = 2:
The value in XIST1_ERW is reset with a 0/1 edge via binector input p4655.
If value = 3:
The value in XIST1_ERW is reset after a 0/1 edge via binector input p4655 when passing the next zero mark.

p4652[0...2] XIST1_ERW reset mode / XIST1_ERW res mode

VECTOR_G

Can be changed: C1(3)	**Calculated:** -	**Access level:** 3
Data type: Integer16	**Dynamic index:** -	**Func. diagram:** 4750
P-Group: -	**Units group:** -	**Unit selection:** -
Not for motor type: -	**Scaling:** -	**Expert list:** 1
Min	**Max**	**Factory setting**
0	3	0

Description: Sets the mode to reset the actual value in XIST_ERW (CO: r4653).

Value:
0: Inactive
1: Reset with zero mark
2: Reset with BICO
3: Reset with selected zero mark

Index:
[0] = Encoder 1
[1] = Encoder 2
[2] = Encoder 3

Dependency: Refer to: r4653, r4654, p4655

Note: If value = 1:
The value in XIST1_ERW is reset when passing every zero mark.
If value = 2:
The value in XIST1_ERW is reset with a 0/1 edge via binector input p4655.
If value = 3:
The value in XIST1_ERW is reset after a 0/1 edge via binector input p4655 when passing the next zero mark.

r4653 CO: XIST1_ERW actual value / XIST1_ERW actval

ENC

Can be changed: -	**Calculated:** -	**Access level:** 3
Data type: Unsigned32	**Dynamic index:** -	**Func. diagram:** 4750
P-Group: Encoder	**Units group:** -	**Unit selection:** -
Not for motor type: -	**Scaling:** -	**Expert list:** 1
Min	**Max**	**Factory setting**
-	-	-

Description: Display and connector output for the actual value XIST1_ERW.

Dependency: Refer to: p4652, r4654, p4655

r4653[0...2] CO: XIST1_ERW actual value / XIST1_ERW actval

VECTOR_G

Can be changed: -	**Calculated:** -	**Access level:** 3
Data type: Unsigned32	**Dynamic index:** -	**Func. diagram:** 4750
P-Group: Encoder	**Units group:** -	**Unit selection:** -
Not for motor type: -	**Scaling:** -	**Expert list:** 1
Min	**Max**	**Factory setting**
-	-	-

Description: Display and connector output for the actual value XIST1_ERW.

Index:
[0] = Encoder 1
[1] = Encoder 2
[2] = Encoder 3

© Siemens AG 2012 All Rights Reserved

Dependency: Refer to: p4652, r4654, p4655

r4654.0 CO/BO: XIST1_ERW status / XIST1_ERW stat

ENC

Can be changed: -	**Calculated:** -	**Access level:** 3
Data type: Unsigned32	**Dynamic index:** -	**Func. diagram:** 4750
P-Group: Encoder	**Units group:** -	**Unit selection:** -
Not for motor type: -	**Scaling:** -	**Expert list:** 1
Min	**Max**	**Factory setting**
-	-	-

Description: Display and binector output to reset XIST1_ERW.

Bit field:

Bit	Signal name	1 signal	0 signal	FP
00	XIST1_ERW reset	High	Low	-

Dependency: Refer to: p4652, r4653, p4655

Note: The reset of XIST1_ERW is initiated via binector input p4655.
Binector output r4654 is reset with a 0 signal from binector input p4655.

r4654.0...16 CO/BO: XIST1_ERW status / XIST1_ERW stat

VECTOR_G

Can be changed: -	**Calculated:** -	**Access level:** 3
Data type: Unsigned32	**Dynamic index:** -	**Func. diagram:** 4750
P-Group: Encoder	**Units group:** -	**Unit selection:** -
Not for motor type: -	**Scaling:** -	**Expert list:** 1
Min	**Max**	**Factory setting**
-	-	-

Description: Display and binector output to reset XIST1_ERW.

Bit field:

Bit	Signal name	1 signal	0 signal	FP
00	Encoder 1 XIST1_ERW reset	High	Low	-
08	Encoder 2 XIST1_ERW reset	High	Low	-
16	Encoder 3 XIST1_ERW reset	High	Low	-

Dependency: Refer to: p4652, r4653, p4655

Note: The reset of XIST1_ERW is initiated via binector input p4655.
Binector output r4654 is reset with a 0 signal from binector input p4655.

p4655 BI: XIST1_ERW reset signal source / XIST1_ERW resS_src

ENC

Can be changed: T	**Calculated:** -	**Access level:** 3
Data type: Unsigned32 / Binary	**Dynamic index:** -	**Func. diagram:** 4750
P-Group: Encoder	**Units group:** -	**Unit selection:** -
Not for motor type: -	**Scaling:** -	**Expert list:** 1
Min	**Max**	**Factory setting**
-	-	0

Description: Sets the signal source to reset XIST1_ERW (CO: r4653).

Dependency: Refer to: p4652, r4653, r4654

Note: The reset of XIST1_ERW depends on the selected mode (p4652).

p4655[0...2] BI: XIST1_ERW reset signal source / XIST1_ERW resS_src

VECTOR_G

Can be changed: T	**Calculated:** -	**Access level:** 3
Data type: Unsigned32 / Binary	**Dynamic index:** -	**Func. diagram:** 4750
P-Group: Encoder	**Units group:** -	**Unit selection:** -
Not for motor type: -	**Scaling:** -	**Expert list:** 1
Min	**Max**	**Factory setting**
-	-	0

Description: Sets the signal source to reset XIST1_ERW (CO: r4653).

© Siemens AG 2012 All Rights Reserved

Index: [0] = Encoder 1
[1] = Encoder 2
[2] = Encoder 3

Dependency: Refer to: p4652, r4653, r4654

Note: The reset of XIST1_ERW depends on the selected mode (p4652).

p4660 Sensor Module filter bandwidth / SM Filt_bandw

ENC

Can be changed: C2(4)	**Calculated:** -	**Access level:** 3
Data type: FloatingPoint32	**Dynamic index:** -	**Func. diagram:** -
P-Group: Encoder	**Units group:** -	**Unit selection:** -
Not for motor type: -	**Scaling:** -	**Expert list:** 1
Min	**Max**	**Factory setting**
0.00 [kHz]	20000.00 [kHz]	0.00 [kHz]

Description: Sets the filter bandwidth for Sensor Module SMx10 (resolver) and SMx20 (sin/cos).
The value set on the Sensor Module is displayed in r4661.
The Sensor Module hardware only supports the following values:
- 0: The Sensor Module's default is used.
- 50 kHz
- 170 kHz
- 500 kHz
- Unlimited: Only the bandwidth of the operational amplifier is effective.

Dependency: Refer to: r4661

Note: A value of zero is displayed if an encoder is not present.

p4660[0...2] Sensor Module filter bandwidth / SM Filt_bandw

VECTOR_G

Can be changed: C2(4)	**Calculated:** -	**Access level:** 3
Data type: FloatingPoint32	**Dynamic index:** -	**Func. diagram:** -
P-Group: Encoder	**Units group:** -	**Unit selection:** -
Not for motor type: -	**Scaling:** -	**Expert list:** 1
Min	**Max**	**Factory setting**
0.00 [kHz]	20000.00 [kHz]	0.00 [kHz]

Description: Sets the filter bandwidth for Sensor Module SMx10 (resolver) and SMx20 (sin/cos).
The value set on the Sensor Module is displayed in r4661.
The Sensor Module hardware only supports the following values:
- 0: The Sensor Module's default is used.
- 50 kHz
- 170 kHz
- 500 kHz
- Unlimited: Only the bandwidth of the operational amplifier is effective.

Index: [0] = Encoder 1
[1] = Encoder 2
[2] = Encoder 3

Dependency: Refer to: r4661

Note: A value of zero is displayed if an encoder is not present.

r4661 Sensor Module filter bandwidth display / SM Filt_bandw disp

ENC

Can be changed: -	**Calculated:** -	**Access level:** 3
Data type: FloatingPoint32	**Dynamic index:** -	**Func. diagram:** -
P-Group: Encoder	**Units group:** -	**Unit selection:** -
Not for motor type: -	**Scaling:** -	**Expert list:** 1
Min	**Max**	**Factory setting**
- [kHz]	- [kHz]	- [kHz]

Description: Display of the effective filter bandwidth for Sensor Module SMx10 (resolver) and SMx20 (sin/cos).

© Siemens AG 2012 All Rights Reserved

The bandwidth of the filter is set using p4660.

Dependency: Refer to: p4660

Note: A value of zero is displayed if an encoder is not present.

r4661[0...2] Sensor Module filter bandwidth display / SM Filt_bandw disp

VECTOR_G

Can be changed: -	**Calculated:** -	**Access level:** 3
Data type: FloatingPoint32	**Dynamic index:** -	**Func. diagram:** -
P-Group: Encoder	**Units group:** -	**Unit selection:** -
Not for motor type: -	**Scaling:** -	**Expert list:** 1
Min	**Max**	**Factory setting**
- [kHz]	- [kHz]	- [kHz]

Description: Display of the effective filter bandwidth for Sensor Module SMx10 (resolver) and SMx20 (sin/cos).

The bandwidth of the filter is set using p4660.

Index: [0] = Encoder 1
[1] = Encoder 2
[2] = Encoder 3

Dependency: Refer to: p4660

Note: A value of zero is displayed if an encoder is not present.

p4662[0...n] Encoder characteristic type / Enc char_type

ENC, VECTOR_G

Can be changed: C2(4)	**Calculated:** -	**Access level:** 4
Data type: Integer16	**Dynamic index:** EDS, p0140	**Func. diagram:** -
P-Group: Encoder	**Units group:** -	**Unit selection:** -
Not for motor type: -	**Scaling:** -	**Expert list:** 1
Min	**Max**	**Factory setting**
0	1	0

Description: Sets the characteristic type.

For non-linear sensors, the interrelationship between the signal voltage and the position can be defined using a third degree polynomial.

Value: 0: Characteristic inactive
1: Characteristic polynomial third degree

Dependency: Refer to: p4663, p4664, p4665, p4666

Note: If value = 1:

A third degree polynomial is defined as follows:

F(x) = K3 * x^3 + K2 * x^2 + K1 * x + K0

Coefficients K0 ... K3 should be defined and entered into p4663 ... p4666.

The sensor range is emulated to x = -0.5 ... +0.5.

p4663[0...n] Encoder characteristic K0 / Enc char K0

ENC, VECTOR_G

Can be changed: U, T	**Calculated:** -	**Access level:** 4
Data type: FloatingPoint32	**Dynamic index:** EDS, p0140	**Func. diagram:** -
P-Group: -	**Units group:** -	**Unit selection:** -
Not for motor type: -	**Scaling:** -	**Expert list:** 1
Min	**Max**	**Factory setting**
-	-	-

Description: Setting for coefficient K0 to calculate the characteristic (p4662).

Dependency: Refer to: p4662, p4664, p4665, p4666

© Siemens AG 2012 All Rights Reserved

p4664[0...n] Encoder characteristic K1 / Enc char K1

ENC, VECTOR_G	**Can be changed:** U, T	**Calculated:** -	**Access level:** 4
	Data type: FloatingPoint32	**Dynamic index:** EDS, p0140	**Func. diagram:** -
	P-Group: -	**Units group:** -	**Unit selection:** -
	Not for motor type: -	**Scaling:** -	**Expert list:** 1
	Min	**Max**	**Factory setting**
	-	-	-

Description: Setting for coefficient K1 to calculate the characteristic (p4662).

Dependency: Refer to: p4662, p4663, p4665, p4666

p4665[0...n] Encoder characteristic K2 / Enc char K2

ENC, VECTOR_G	**Can be changed:** U, T	**Calculated:** -	**Access level:** 4
	Data type: FloatingPoint32	**Dynamic index:** EDS, p0140	**Func. diagram:** -
	P-Group: -	**Units group:** -	**Unit selection:** -
	Not for motor type: -	**Scaling:** -	**Expert list:** 1
	Min	**Max**	**Factory setting**
	-	-	-

Description: Setting for coefficient K2 to calculate the characteristic (p4662).

Dependency: Refer to: p4662, p4663, p4664, p4666

p4666[0...n] Encoder characteristic K3 / Enc char K3

ENC, VECTOR_G	**Can be changed:** U, T	**Calculated:** -	**Access level:** 4
	Data type: FloatingPoint32	**Dynamic index:** EDS, p0140	**Func. diagram:** -
	P-Group: -	**Units group:** -	**Unit selection:** -
	Not for motor type: -	**Scaling:** -	**Expert list:** 1
	Min	**Max**	**Factory setting**
	-	-	-

Description: Setting for coefficient K3 to calculate the characteristic (p4662).

Dependency: Refer to: p4662, p4663, p4664, p4665

p4670[0...n] Analog sensor configuration / Ana_sens config

ENC, VECTOR_G	**Can be changed:** U, T	**Calculated:** -	**Access level:** 4
	Data type: Unsigned32	**Dynamic index:** EDS, p0140	**Func. diagram:** -
	P-Group: -	**Units group:** -	**Unit selection:** -
	Not for motor type: -	**Scaling:** -	**Expert list:** 1
	Min	**Max**	**Factory setting**
	-	-	0000 0000 0000 0000 0000 0000 0000 0000 bin

Description: Sets the configuration for evaluation on the analog sensor.

Bit field:

Bit	Signal name	1 signal	0 signal	FP
06	Set velocity to 0	Yes	No	-
08	Pos val range	0.0 / 1.0 pulse	-0.5 / +0.5 pulse	-
09	Fault/alarm messages	Alarm	Fault	-
10	Chann B act	Yes	No	-
11	Chann A act	Yes	No	-
13	Commutation angle constant	Yes	No	-
14	Suppress faults	Yes	No	-
31	Extrapolation	ON	OFF	-

Notice: Re bit 06:

Setting the bit sets the velocity actual value (r0061) permanently to 0.

Re bit 13:

Setting the bit sets the commutation angle permanently to the commutation angle offset (p0431).

© Siemens AG 2012 All Rights Reserved

Note: Re bit 09:
A setting of bit = 0 will trigger a fault for the relevant channel if the actual value is invalid.
A setting of bit = 1 will trigger an alarm for the relevant channel if the actual value is invalid.
Re bit 10, 11:
If both channels are activated, the actual value is generated from the mean value of both channels. If a channel fails (actual value invalid), it is not included when the mean value is generated.
Re bit 14:
The bit is only evaluated for encoder 1. No effect for encoder 2 and encoder 3.

p4671[0...n] Analog sensor input / Ana_sens inp

ENC, VECTOR_G

Can be changed: C2(4)	**Calculated:** -	**Access level:** 4
Data type: Integer16	**Dynamic index:** EDS, p0140	**Func. diagram:** -
P-Group: Encoder	**Units group:** -	**Unit selection:** -
Not for motor type: -	**Scaling:** -	**Expert list:** 1
Min	**Max**	**Factory setting**
0	3	0

Description: Sets the input circuit for the analog sensor.

Value:
0: Differential
1: Single-ended A, B
2: Single-ended A*, B*
3: Single-ended A, B sensitive

Note: p4671 = 0:
The two signals on a track are evaluated differentially.
p4671 = 1:
Only the non-inverted signal on a track is evaluated.
p4671 = 2:
Only the inverted signal on a track is evaluated.
p4671 = 3:
Only the non-inverted signal on a track (high resolution) is evaluated.

p4672[0...n] Analog sensor channel A voltage at actual value zero / Ana_sens A U at 0

ENC, VECTOR_G

Can be changed: U, T	**Calculated:** -	**Access level:** 4
Data type: FloatingPoint32	**Dynamic index:** EDS, p0140	**Func. diagram:** -
P-Group: -	**Units group:** -	**Unit selection:** -
Not for motor type: -	**Scaling:** -	**Expert list:** 1
Min	**Max**	**Factory setting**
-10.0000 [V]	10.0000 [V]	0.0000 [V]

Description: Sets the voltage when the connected sensor is at actual value zero.
At this voltage channel A supplies an actual value of zero.

p4673[0...n] Analog sensor channel A voltage per encoder period / Ana_sens A U/per

ENC, VECTOR_G

Can be changed: U, T	**Calculated:** -	**Access level:** 4
Data type: FloatingPoint32	**Dynamic index:** EDS, p0140	**Func. diagram:** -
P-Group: -	**Units group:** -	**Unit selection:** -
Not for motor type: -	**Scaling:** -	**Expert list:** 1
Min	**Max**	**Factory setting**
-10.0000 [V]	10.0000 [V]	6.0000 [V]

Description: Sets the output voltage range to be mapped for the connected analog sensor.
The voltage range is determined by the following parameters:
- p4672 (voltage at actual value 0)
- p4673 (voltage per encoder period)

Note: The minimum actual value which can be mapped is equal to p4672 - p4673/2.
The maximum actual value which can be mapped is equal to p4672 + p4673/2.

© Siemens AG 2012 All Rights Reserved

p4674[0...n] Analog sensor channel B voltage at actual value zero / Ana_sens B U at 0

ENC, VECTOR_G

Can be changed: U, T	**Calculated:** -	**Access level:** 4
Data type: FloatingPoint32	**Dynamic index:** EDS, p0140	**Func. diagram:** -
P-Group: -	**Units group:** -	**Unit selection:** -
Not for motor type: -	**Scaling:** -	**Expert list:** 1
Min	**Max**	**Factory setting**
-10.0000 [V]	10.0000 [V]	0.0000 [V]

Description: Sets the voltage when the connected sensor is at actual value zero.
At this voltage channel B supplies an actual value of zero.

p4675[0...n] Analog sensor channel B voltage per encoder period / Ana_sens B U/per

ENC, VECTOR_G

Can be changed: U, T	**Calculated:** -	**Access level:** 4
Data type: FloatingPoint32	**Dynamic index:** EDS, p0140	**Func. diagram:** -
P-Group: -	**Units group:** -	**Unit selection:** -
Not for motor type: -	**Scaling:** -	**Expert list:** 1
Min	**Max**	**Factory setting**
-10.0000 [V]	10.0000 [V]	6.0000 [V]

Description: Sets the output voltage range to be mapped for the connected analog sensor.
The voltage range is determined by the following parameters:
- p4674 (voltage at actual value 0)
- p4675 (voltage per encoder period)

Note: The minimum actual value which can be mapped is equal to p4674 - p4675/2.
The maximum actual value which can be mapped is equal to p4674 + p4675/2.

p4676[0...n] Analog sensor range limit threshold / Ana_sens lim thr

ENC, VECTOR_G

Can be changed: U, T	**Calculated:** -	**Access level:** 4
Data type: FloatingPoint32	**Dynamic index:** EDS, p0140	**Func. diagram:** -
P-Group: -	**Units group:** -	**Unit selection:** -
Not for motor type: -	**Scaling:** -	**Expert list:** 1
Min	**Max**	**Factory setting**
0.0 [%]	100.0 [%]	100.0 [%]

Description: Sets the threshold for limit monitoring of the absolute actual value on the analog sensor.
If this threshold is overshot by the actual value of a channel, a corresponding fault/alarm (p4670.9) is output.

Dependency: Refer to: p4673, p4675

p4677[0...n] Analog sensor LVDT configuration / Ana_sens LVDT conf

ENC, VECTOR_G

Can be changed: C2(4)	**Calculated:** -	**Access level:** 4
Data type: Unsigned32	**Dynamic index:** EDS, p0140	**Func. diagram:** -
P-Group: Encoder	**Units group:** -	**Unit selection:** -
Not for motor type: -	**Scaling:** -	**Expert list:** 1
Min	**Max**	**Factory setting**
-	-	0000 bin

Description: Sets the configuration for LVDT mode on the analog sensor.

Bit field:

Bit	Signal name	1 signal	0 signal	FP
00	LVDT ON	Yes	No	-
01	Track B excitation	Yes	No	-
02	Fixed value amplitude	Yes	No	-
03	Fixed value amplitude and phase	Yes	No	-

© Siemens AG 2012 All Rights Reserved

p4678[0...n] Analog sensor LVDT ratio / An_sens LVDT ratio

ENC, VECTOR_G	**Can be changed:** C2(4)	**Calculated:** -	**Access level:** 4
	Data type: FloatingPoint32	**Dynamic index:** EDS, p0140	**Func. diagram:** -
	P-Group: Encoder	**Units group:** -	**Unit selection:** -
	Not for motor type: -	**Scaling:** -	**Expert list:** 1
	Min	**Max**	**Factory setting**
	0.00 [%]	200.00 [%]	50.00 [%]

Description: Sets the ratio for the LVDT sensor.

p4679[0...n] Analog sensor LVDT phase / An_sens LVDT ph

ENC, VECTOR_G	**Can be changed:** C2(4), T	**Calculated:** -	**Access level:** 4
	Data type: FloatingPoint32	**Dynamic index:** EDS, p0140	**Func. diagram:** -
	P-Group: Encoder	**Units group:** -	**Unit selection:** -
	Not for motor type: -	**Scaling:** -	**Expert list:** 1
	Min	**Max**	**Factory setting**
	-360.00 [°]	360.00 [°]	0.00 [°]

Description: Sets the phase for the LVDT sensor.

p4680[0...n] Zero mark monitoring tolerance permissible / ZM_monit tol perm

ENC, VECTOR_G	**Can be changed:** C2(4)	**Calculated:** -	**Access level:** 3
	Data type: Unsigned32	**Dynamic index:** EDS, p0140	**Func. diagram:** -
	P-Group: Encoder	**Units group:** -	**Unit selection:** -
	Not for motor type: -	**Scaling:** -	**Expert list:** 1
	Min	**Max**	**Factory setting**
	0	1000	4

Description: Sets the permissible tolerance in encoder pulses for the zero mark distance in the context of zero mark monitoring.
Causes fault F3x100 to appear less frequently.

Dependency: Refer to: p0430
Refer to: F31100

Note: The parameter is activated using p0430.21 = 1 (zero mark tolerance).

p4681[0...n] Zero mark monitoring, tolerance window limit 1 positive / ZM tol lim 1 pos

ENC, VECTOR_G	**Can be changed:** C2(4)	**Calculated:** -	**Access level:** 3
	Data type: Unsigned32	**Dynamic index:** EDS, p0140	**Func. diagram:** -
	P-Group: Encoder	**Units group:** -	**Unit selection:** -
	Not for motor type: -	**Scaling:** -	**Expert list:** 1
	Min	**Max**	**Factory setting**
	0	1000	2

Description: Sets the positive tolerance window in encoder pulses for limit 1 for the zero mark monitoring.
If the deviation is less than this limit, then the pulse number is not corrected. If it is higher than this limit, fault F3x131 is triggered.
If fault F3x131 is re-parameterized to alarm (A) or no message (N), the encoder pulses which have not been corrected are added to the accumulator (p4688). The accumulator can be de-activated using p0437.7.

Dependency: Refer to: p0437, p4688
Refer to: F31131

Note: This monitoring is activated by setting p0437.2 = 1 (position actual value correction).
The positive limit describes additional pulses due to EMC.

© Siemens AG 2012 All Rights Reserved

p4682[0...n] Zero mark monitoring, tolerance window limit 1 negative / ZM tol lim 1 neg

ENC, VECTOR_G

Can be changed: C2(4)	**Calculated:** -	**Access level:** 3
Data type: Integer32	**Dynamic index:** EDS, p0140	**Func. diagram:** -
P-Group: Encoder	**Units group:** -	**Unit selection:** -
Not for motor type: -	**Scaling:** -	**Expert list:** 1
Min	**Max**	**Factory setting**
-1001	0	-1001

Description: Sets the negative tolerance window in encoder pulses for limit 1 for the zero mark monitoring.

If the deviation is less than this limit, the PPR is not corrected. If it is higher than this limit, fault F3x131 is triggered.

If fault F3x131 is re-parameterized to alarm (A) or no message (N), the encoder pulses which have not been corrected are added to the accumulator (p4688). The accumulator can be de-activated using p0437.7.

Dependency: Refer to: p0437, p4681, p4688

Refer to: F31131

Note: This monitoring is activated by setting p0437.2 = 1 (position actual value correction).

For a set value = -1001, the negated value of p4681 is effective.

The negative limit describes the pulses lost due to a covered glass panel in the incremental encoder.

p4683[0...n] Zero mark monitoring tolerance window alarm threshold positive / ZM tol A_thr pos

ENC, VECTOR_G

Can be changed: C2(4)	**Calculated:** -	**Access level:** 3
Data type: Unsigned32	**Dynamic index:** EDS, p0140	**Func. diagram:** -
P-Group: Encoder	**Units group:** -	**Unit selection:** -
Not for motor type: -	**Scaling:** -	**Expert list:** 1
Min	**Max**	**Factory setting**
0	100000	0

Description: Sets the positive tolerance window in encoder pulses for limit 2 for the zero mark monitoring.

If the zero mark deviation is higher than the tolerance set in p4681 and p4682 and fault F3x131 is re-parameterized to alarm (A) or no message (N), the accumulator p4688 is compared with this parameter and, if applicable, alarm A3x422 is output for 5 seconds.

Dependency: Refer to: p0437, p4681, p4682, p4688

Refer to: F31131, A31422

Note: Zero mark monitoring is activated by setting p0437.2 = 1 (position actual value correction).

p4684[0...n] Zero mark monitoring tolerance window alarm threshold negative / ZM tol A_thr neg

ENC, VECTOR_G

Can be changed: C2(4)	**Calculated:** -	**Access level:** 3
Data type: Integer32	**Dynamic index:** EDS, p0140	**Func. diagram:** -
P-Group: Encoder	**Units group:** -	**Unit selection:** -
Not for motor type: -	**Scaling:** -	**Expert list:** 1
Min	**Max**	**Factory setting**
-100001	0	-100001

Description: Sets the negative tolerance window in encoder pulses for limit 2 for the zero mark monitoring.

If the zero mark deviation is higher than the tolerance set in p4681 and p4682 and fault F3x131 is re-parameterized to alarm (A) or no message (N), the accumulator p4688 is compared with this parameter and, if applicable, alarm A3x422 is output for 5 seconds.

Dependency: Refer to: p0437, p4683, p4688

Refer to: F31131, A31422

Note: Zero mark monitoring is activated by setting p0437.2 = 1 (position actual value correction).

For a set value = -100001, the negated value of p4683 is effective.

© Siemens AG 2012 All Rights Reserved

p4685[0...n] Speed actual value mean value generation / n_act mean val

ENC, VECTOR_G

Can be changed: C2(4)	**Calculated:** -	**Access level:** 3
Data type: Unsigned32	**Dynamic index:** EDS, p0140	**Func. diagram:** -
P-Group: Encoder	**Units group:** -	**Unit selection:** -
Not for motor type: -	**Scaling:** -	**Expert list:** 1
Min	**Max**	**Factory setting**
0	20	0

Description: Sets the number of current controller clock cycles for mean value generation of the speed actual value.

Note: Value = 0, 1: No mean value generation.
Higher values also mean higher dead times for the speed actual value.

p4686[0...n] Zero mark minimum length / ZM min length

ENC, VECTOR_G

Can be changed: C2(4)	**Calculated:** -	**Access level:** 3
Data type: Unsigned32	**Dynamic index:** EDS, p0140	**Func. diagram:** -
P-Group: Encoder	**Units group:** -	**Unit selection:** -
Not for motor type: -	**Scaling:** -	**Expert list:** 1
Min	**Max**	**Factory setting**
0	10	1

Description: Sets the minimum length for the zero mark.

Dependency: Refer to: p0425, p0437

Note: The value for the minimum length of the zero mark must be set less than p0425.
The parameter is activated using p0437.1 = 1 (zero mark edge detection).

p4688 CO: Zero mark monitoring, differential pulse count / ZM diff_pulse qty

ENC

Can be changed: T	**Calculated:** -	**Access level:** 3
Data type: Integer32	**Dynamic index:** -	**Func. diagram:** -
P-Group: -	**Units group:** -	**Unit selection:** -
Not for motor type: -	**Scaling:** -	**Expert list:** 1
Min	**Max**	**Factory setting**
-2147483648	2147483647	0

Description: Displays the number of differential pulses for the zero mark monitoring that have accumulated.
If fault F3x131 is re-parameterized to alarm (A) or no message (N), the encoder pulses which have not been corrected are added to the accumulator (p4688).

Dependency: Refer to: p4681, p4682, p4683, p4684

Note: The display can only be reset to zero.

p4688[0...2] CO: Zero mark monitoring, differential pulse count / ZM diff_pulse qty

VECTOR_G

Can be changed: T	**Calculated:** -	**Access level:** 3
Data type: Integer32	**Dynamic index:** -	**Func. diagram:** -
P-Group: -	**Units group:** -	**Unit selection:** -
Not for motor type: -	**Scaling:** -	**Expert list:** 1
Min	**Max**	**Factory setting**
-2147483648	2147483647	0

Description: Displays the number of differential pulses for the zero mark monitoring that have accumulated.
If fault F3x131 is re-parameterized to alarm (A) or no message (N), the encoder pulses which have not been corrected are added to the accumulator (p4688).

Index: [0] = Encoder 1
[1] = Encoder 2
[2] = Encoder 3

Dependency: Refer to: p4681, p4682, p4683, p4684

Note: The display can only be reset to zero.

© Siemens AG 2012 All Rights Reserved

r4689 CO: Squarewave encoder, diagnostics / Sq-wave enc diag

ENC	**Can be changed:** -	**Calculated:** -	**Access level:** 4
	Data type: Unsigned32	**Dynamic index:** -	**Func. diagram:** -
	P-Group: Encoder	**Units group:** -	**Unit selection:** -
	Not for motor type: -	**Scaling:** -	**Expert list:** 1
	Min	**Max**	**Factory setting**
	-	-	-

Description: Displays the encoder status according to PROFIdrive for a squarewave encoder.

Dependency: Refer to: A31422

Note: After alarm A3x422 is output, this parameter is set for 100 ms.

r4689[0...2] CO: Squarewave encoder, diagnostics / Sq-wave enc diag

VECTOR_G	**Can be changed:** -	**Calculated:** -	**Access level:** 4
	Data type: Unsigned32	**Dynamic index:** -	**Func. diagram:** -
	P-Group: Encoder	**Units group:** -	**Unit selection:** -
	Not for motor type: -	**Scaling:** -	**Expert list:** 1
	Min	**Max**	**Factory setting**
	-	-	-

Description: Displays the encoder status according to PROFIdrive for a squarewave encoder.

Index:
[0] = Encoder 1
[1] = Encoder 2
[2] = Encoder 3

Dependency: Refer to: A31422

Note: After alarm A3x422 is output, this parameter is set for 100 ms.

p4690 SMI spare part component number / SMI comp_no

CU_G130_DP, CU_G130_PN, CU_G150_DP, CU_G150_PN	**Can be changed:** T	**Calculated:** -	**Access level:** 1
	Data type: Unsigned16	**Dynamic index:** -	**Func. diagram:** -
	P-Group: Displays, signals	**Units group:** -	**Unit selection:** -
	Not for motor type: -	**Scaling:** -	**Expert list:** 1
	Min	**Max**	**Factory setting**
	0	399	0

Description: Sets the component number for the SMI/DQI for which motor and/or encoder data should be saved, deleted or downloaded.

Dependency: Refer to: p4691, p4692, p4693

Note: DQI: DRIVE-CLiQ Sensor Integrated
SMI: SINAMICS Sensor Module Integrated

p4691 SMI spare part save/download data / Save/DL SMI data

CU_G130_DP, CU_G130_PN, CU_G150_DP, CU_G150_PN	**Can be changed:** T	**Calculated:** -	**Access level:** 1
	Data type: Integer16	**Dynamic index:** -	**Func. diagram:** -
	P-Group: Displays, signals	**Units group:** -	**Unit selection:** -
	Not for motor type: -	**Scaling:** -	**Expert list:** 1
	Min	**Max**	**Factory setting**
	0	39	0

Description: Setting for the saving/downloading/deletion of motor and/or encoder data for the component specified in p4690 (SMI/DQI).

A backup of this data can be saved to non-volatile memory. The backup procedure is performed automatically as part of the function for saving to non-volatile memory (p0977 = 1 or "Copy RAM to ROM"). If a part is replaced, the saved data can be reloaded.

© Siemens AG 2012 All Rights Reserved

Procedure:
p4690 = set component number
p4691 = 1, 2, 30: Set the required procedure (save/download/delete).
p4691 = 9, 10, 36: Feedback signal on successful completion of the procedure.
p4691 = 11... 22, 37, 38: Error values if the procedure could not be executed successfully.

Value:

0: Inactive
1: Save SMI data
2: Download SMI data
9: SMI data downloaded and POWER ON required for component
10: SMI data backup complete
11: SMI data backup for selected component not found
12: Selected component not available or not connected
13: Insufficient memory space for backup
14: Format of saved data is incompatible
15: Transfer fault during data download
16: Transfer fault during data backup
17: Data backup does not match parameterized encoder/motor
18: Data backup directory not permissible
19: Component already contains data
20: Component does not contain any data
21: Component is not an SMI or a DQI
22: SMI data cannot be downloaded for component
30: Delete SMI data
35: Confirmation of SMI data delete required
36: SMI data deleted and POWER ON required for component
37: Access level not sufficient for delete
38: Delete SMI data not permitted for component
39: SMI data for component cannot be deleted

Dependency: Refer to: p4690, p4692, p4693

Notice: Once SMI/DQI data has been deleted or downloaded successfully, the component has to be powered up.

Note: SMI: SINAMICS Sensor Module Integrated
DQI: DRIVE-CLiQ Sensor Integrated
Help for error value = 11:
- Save the data for the original SMI on the memory card.
- Use an SMI with a suitable hardware version.
Help for error value = 12:
- Set the correct component number or connect the component.
Help for error value = 13:
- Use a memory card with more memory space.
Help for error value = 14:
- Create a data backup on the memory card corresponding to the SMI type.
Help for error value = 15:
- Check the DRIVE-CLiQ wiring for the component.
Help for error value = 16:
- Check the DRIVE-CLiQ wiring for the component.
Help for error value = 17:
- Save the data for the original SMI on the memory card.
Help for error value = 18:
- Set parameter p4693 to an appropriate value.
Help for error value = 19:
- Perform an SMI delete or use a blank SMI.
Help for error value = 20:
- Use an SMI that is not blank.
Help for error value = 21:
- Set the correct component number (p4690).
Note for error value = 22:
- Data cannot be downloaded for component.

© Siemens AG 2012 All Rights Reserved

Help for error value = 35:
- Reset parameter p4691 to 30.
Help for error value = 37:
- Set the access level to Expert or higher.
Help for error value = 38:
- Insert the SMI/DQI into the actual topology as an additional component (component number >= 200).
- Set the component number from the actual topology (p4690 >= 200).
- Set the correct component number (p4690 >= 200).
Note for error value = 39:
- SMI already deleted or too old. Delete not possible.

p4692 SMI spare part save data of all SMIs / Save SMI data

CU_G130_DP, CU_G130_PN, CU_G150_DP, CU_G150_PN

Can be changed: T	**Calculated:** -	**Access level:** 1
Data type: Integer16	**Dynamic index:** -	**Func. diagram:** -
P-Group: Displays, signals	**Units group:** -	**Unit selection:** -
Not for motor type: -	**Scaling:** -	**Expert list:** 1
Min	**Max**	**Factory setting**
0	29	0

Description: Setting to back up the data of all SMIs and DQIs featured in the target topology.

Value:
0: Inactive
1: Save data of all SMIs and DQIs
10: Save all data successful
13: Insufficient memory space for backup
16: Transfer fault during data backup
20: Component does not contain any data
29: Not all components from target topology saved

Note: SMI: SINAMICS Sensor Module Integrated
p4692 = 10: Automatic on successful completion of backup procedure.
p4692 = 13, 16, 20, 29: Error values if the procedure could not be executed successfully.
The procedure must be repeated if the data save operation was interrupted (e.g. if the power supply voltage failed).
Help for error value = 13:
- Use a memory card with more memory space.
Help for error value = 16:
- check the DRIVE-CLiQ connection.
Help for error value = 20:
- Use an SMI that is not blank.
Help for error value = 29:
- Check and correct the target and actual topologies for the SMIs.
- Repeat the save procedure.

p4693[0...1] SMI spare part data backup directory / SMI dat_bkup dir

CU_G130_DP, CU_G130_PN, CU_G150_DP, CU_G150_PN

Can be changed: T	**Calculated:** -	**Access level:** 3
Data type: Unsigned16	**Dynamic index:** -	**Func. diagram:** -
P-Group: Displays, signals	**Units group:** -	**Unit selection:** -
Not for motor type: -	**Scaling:** -	**Expert list:** 1
Min	**Max**	**Factory setting**
0	399	0

Description: Sets the directory for downloading and saving data.
Example:
The SMI has the component number 5 and the SMI data (motor/encoder data) is to be stored in subdirectory C205.
--> p4690 = 5, p4693[0] = 205, p4691 = 1

Index: [0] = Subdirectory selection
[1] = Reserved

Dependency: Refer to: p4691, r4694

© Siemens AG 2012 All Rights Reserved

Notice: If p4693[0] is not equal to 0 and p4693[0] is not equal to p4690, the following applies:
- Only a number >= 200 may be selected for the subdirectory when saving.
- In the case of downloads, a selection for the subdirectory may only be made for an SMI/DQI with a component number >= 200 (preliminary component number) (p4690 >= 200).

Note: DQI: DRIVE-CLiQ Sensor Integrated
SMI: SINAMICS Sensor Module Integrated
Re index 0:
This index is used to select the subdirectory for saving and downloading data. The motor order number (MLFB) of the corresponding data backup is displayed in r4694.
For p4693[0] = 0, the following applies:
The directory is determined by the setting of p4690.

r4694[0...19] SMI spare part data backup motor order number / SMI dat_bkup MLFB

CU_G130_DP, CU_G130_PN, CU_G150_DP, CU_G150_PN

Can be changed: -	**Calculated:** -	**Access level:** 3
Data type: Unsigned8	**Dynamic index:** -	**Func. diagram:** -
P-Group: Displays, signals	**Units group:** -	**Unit selection:** -
Not for motor type: -	**Scaling:** -	**Expert list:** 1
Min	**Max**	**Factory setting**
-	-	-

Description: Displays the motor order number (MLFB) of the data backup selected with p4693.

Dependency: Refer to: p4691, p4692

Caution: If the selected subdirectory contains a number of data sets, "More Datasets" is displayed in r4694[0...19].
If there is no SMI data (motor/encoder data) in the selected subdirectory or if the selected subdirectory does not exist, the following applies:
- The number of the next subdirectory located is displayed.
- This subdirectory is not checked for valid SMI data.
- If another subdirectory cannot be located, nothing is displayed in r4694[0...19].

Note: SMI: SINAMICS Sensor Module Integrated

p4700[0...1] Trace control / Trace control

CU_G130_DP, CU_G130_PN, CU_G150_DP, CU_G150_PN

Can be changed: U, T	**Calculated:** -	**Access level:** 3
Data type: Integer16	**Dynamic index:** -	**Func. diagram:** -
P-Group: Trace and function generator	**Units group:** -	**Unit selection:** -
Not for motor type: -	**Scaling:** -	**Expert list:** 0
Min	**Max**	**Factory setting**
0	1	0

Description: Setting to control the trace function.

Value:
0: Stop trace
1: Start trace

Index:
[0] = Trace 0
[1] = Trace 1

p4701 Measuring function, control / Meas fct ctrl

CU_G130_DP, CU_G130_PN, CU_G150_DP, CU_G150_PN

Can be changed: U, T	**Calculated:** -	**Access level:** 3
Data type: Integer16	**Dynamic index:** -	**Func. diagram:** -
P-Group: Trace and function generator	**Units group:** -	**Unit selection:** -
Not for motor type: -	**Scaling:** -	**Expert list:** 0
Min	**Max**	**Factory setting**
0	3	0

Description: Setting to control the measurement function.

Value:
0: Stop measuring function
1: Start measuring function
2: Measuring function, check parameterization
3: Start measuring function without enable signals

© Siemens AG 2012 All Rights Reserved

r4705[0...1] Trace status / Trace status

CU_G130_DP, CU_G130_PN, CU_G150_DP, CU_G150_PN

Can be changed: -	**Calculated:** -	**Access level:** 3
Data type: Integer16	**Dynamic index:** -	**Func. diagram:** -
P-Group: Trace and function generator	**Units group:** -	**Unit selection:** -
Not for motor type: -	**Scaling:** -	**Expert list:** 0
Min	**Max**	**Factory setting**
0	4	-

Description: Displays the actual status of the trace.

Value:
0: Trace inactive
1: Trace is recording presamples
2: Trace is waiting for trigger event
3: Trace is recording
4: Recording (trace) ended

Index:
[0] = Trace 0
[1] = Trace 1

r4706 Measuring function, status / Meas fct status

CU_G130_DP, CU_G130_PN, CU_G150_DP, CU_G150_PN

Can be changed: -	**Calculated:** -	**Access level:** 3
Data type: Integer16	**Dynamic index:** -	**Func. diagram:** -
P-Group: Trace and function generator	**Units group:** -	**Unit selection:** -
Not for motor type: -	**Scaling:** -	**Expert list:** 0
Min	**Max**	**Factory setting**
0	5	-

Description: Displays the actual status of the measuring function.

Value:
0: Measurement function inactive
1: Measuring function, parameterization checked
2: Measuring function waits for stabilizing time
3: Measuring function recording (tracing)
4: Measuring function, trace ended with error
5: Measuring function, trace successfully completed

p4707 Measurement function configuration / Meas fct config

CU_G130_DP, CU_G130_PN, CU_G150_DP, CU_G150_PN

Can be changed: U, T	**Calculated:** -	**Access level:** 4
Data type: Integer16	**Dynamic index:** -	**Func. diagram:** -
P-Group: -	**Units group:** -	**Unit selection:** -
Not for motor type: -	**Scaling:** -	**Expert list:** 1
Min	**Max**	**Factory setting**
0	1	0

Description: Setting to configure the measurement function.

Value:
0: Standard
1: Free meas fct

Note:
The parameter cannot be changed when the measurement function has been started (r4706 = 2, 3).
For value = 0:
The system injection point selected to inject the function generator signal is used.
For value = 1:
No system injection point is used.
When using the measuring function in the STARTER commissioning software, the following applies:
A change to a value only becomes effective after first closing and opening the measuring function screen form.
For value = 0:
The master control must be fetched.
There are two fixed and two freely selectable signals for recording.
For value = 1:
Master control does not have to be fetched.
There are four freely selectable signals for recording.

© Siemens AG 2012 All Rights Reserved

r4708[0...1] Trace memory space required / Trace mem required

CU_G130_DP, CU_G130_PN, CU_G150_DP, CU_G150_PN

Can be changed: -	**Calculated:** -	**Access level:** 3
Data type: Unsigned32	**Dynamic index:** -	**Func. diagram:** -
P-Group: Trace and function generator	**Units group:** -	**Unit selection:** -
Not for motor type: -	**Scaling:** -	**Expert list:** 0
Min	**Max**	**Factory setting**
-	-	-

Description: Displays the required memory in bytes for the actual parameterization.

Index: [0] = Trace 0
[1] = Trace 1

Dependency: Refer to: r4799

r4709[0...1] Trace memory space required for measuring functions / Trace mem required

CU_G130_DP, CU_G130_PN, CU_G150_DP, CU_G150_PN

Can be changed: -	**Calculated:** -	**Access level:** 3
Data type: Unsigned32	**Dynamic index:** -	**Func. diagram:** -
P-Group: Trace and function generator	**Units group:** -	**Unit selection:** -
Not for motor type: -	**Scaling:** -	**Expert list:** 0
Min	**Max**	**Factory setting**
-	-	-

Description: Displays the memory space required for the actual parameter setting in bytes, if the trace is used for the measuring functions.

Index: [0] = Trace 0
[1] = Trace 1

Dependency: Refer to: r4799

p4710[0...1] Trace trigger condition / Trace Trig_cond

CU_G130_DP, CU_G130_PN, CU_G150_DP, CU_G150_PN

Can be changed: U, T	**Calculated:** -	**Access level:** 3
Data type: Integer16	**Dynamic index:** -	**Func. diagram:** -
P-Group: Trace and function generator	**Units group:** -	**Unit selection:** -
Not for motor type: -	**Scaling:** -	**Expert list:** 0
Min	**Max**	**Factory setting**
1	7	2

Description: Sets the trigger condition for the trace.

Value:
1: Immediate trace start
2: Positive edge
3: Negative edge
4: Entry to hysteresis band
5: Leaving hysteresis band
6: Trigger at bit mask
7: Start with function generator

Index: [0] = Trace 0
[1] = Trace 1

p4711[0...5] Trace trigger signal / Trace trig_signal

CU_G130_DP, CU_G130_PN, CU_G150_DP, CU_G150_PN

Can be changed: U, T	**Calculated:** -	**Access level:** 3
Data type: Unsigned32	**Dynamic index:** -	**Func. diagram:** -
P-Group: Trace and function generator	**Units group:** -	**Unit selection:** -
Not for motor type: -	**Scaling:** -	**Expert list:** 0
Min	**Max**	**Factory setting**
-	-	0

Description: Selects the trigger signal for the trace.

Index: [0] = Trace 0 parameter in BICO format
[1] = Trace 1 parameter in BICO format
[2] = Trace 0 PINx with DO Id and chart Id

© Siemens AG 2012 All Rights Reserved

[3] = Trace 0 PINx with block Id and PIN Id
[4] = Trace 1 PINy with DO Id and chart Id
[5] = Trace 1 PINy with block Id and PIN Id

Dependency: Only effective when p4710 does not equal 1.

Note: It only makes sense to trace the PINs using the commissioning software.
For index 2(4) and 3(5) equal to zero, index 0(1) can only be written and vice versa.
Re index 0 ... 1:
Here, the trigger signal for trace 0 or 1 is entered as parameter in the BICO format.
For trace with a physical address (p4789), the data type of the trigger signal is set here.
Re index 2 ...3:
The triggering PIN for trace 0 is entered here.
Index 2 bit 31 ... 16: Number of the Drive Object (DO), bit 15 ... 0: Number of the chart
Index 3 bit 31 ... 16: Number of the block, bit 15 ... 0: Number of the PIN
Re index 4 ... 5:
The triggering PIN for trace 1 is entered here.
Index 4 bit 31 ... 16: Number of the Drive Object (DO), bit 15 ... 0: Number of the chart
Index 5 bit 31 ... 16: Number of the block, bit 15 ... 0: Number of the PIN

p4712[0...1] Trace trigger threshold / Trace trig_thresh

CU_G130_DP, CU_G130_PN, CU_G150_DP, CU_G150_PN

Can be changed: U, T	**Calculated:** -	**Access level:** 3
Data type: FloatingPoint32	**Dynamic index:** -	**Func. diagram:** -
P-Group: Trace and function generator	**Units group:** -	**Unit selection:** -
Not for motor type: -	**Scaling:** -	**Expert list:** 0
Min	**Max**	**Factory setting**
-340.28235E36	340.28235E36	0.00

Description: Sets the trigger threshold for the trace.

Index: [0] = Trace 0
[1] = Trace 1

Dependency: Only effective when p4710 = 2, 3.

p4713[0...1] Trace tolerance band trigger threshold 1 / Trace trig thr 1

CU_G130_DP, CU_G130_PN, CU_G150_DP, CU_G150_PN

Can be changed: U, T	**Calculated:** -	**Access level:** 3
Data type: FloatingPoint32	**Dynamic index:** -	**Func. diagram:** -
P-Group: Trace and function generator	**Units group:** -	**Unit selection:** -
Not for motor type: -	**Scaling:** -	**Expert list:** 0
Min	**Max**	**Factory setting**
-340.28235E36	340.28235E36	0.00

Description: Sets the first trigger threshold for trigger via tolerance band.

Index: [0] = Trace 0
[1] = Trace 1

Dependency: Only effective when p4710 = 4, 5.

p4714[0...1] Trace tolerance band trigger threshold 2 / Trace trig thr 2

CU_G130_DP, CU_G130_PN, CU_G150_DP, CU_G150_PN

Can be changed: U, T	**Calculated:** -	**Access level:** 3
Data type: FloatingPoint32	**Dynamic index:** -	**Func. diagram:** -
P-Group: Trace and function generator	**Units group:** -	**Unit selection:** -
Not for motor type: -	**Scaling:** -	**Expert list:** 0
Min	**Max**	**Factory setting**
-340.28235E36	340.28235E36	0.00

Description: Sets the second trigger threshold for trigger via tolerance band

Index: [0] = Trace 0
[1] = Trace 1

Dependency: Only effective when p4710 = 4, 5.

© Siemens AG 2012 All Rights Reserved

p4715[0...1] Trace bit mask trigger, bit mask / Trace trig mask

CU_G130_DP, CU_G130_PN, CU_G150_DP, CU_G150_PN	**Can be changed:** U, T	**Calculated:** -	**Access level:** 3
	Data type: Unsigned32	**Dynamic index:** -	**Func. diagram:** -
	P-Group: Trace and function generator	**Units group:** -	**Unit selection:** -
	Not for motor type: -	**Scaling:** -	**Expert list:** 0
	Min	**Max**	**Factory setting**
	0	4294967295	0

Description: Sets the bit mask for the bit mask trigger.

Index: [0] = Trace 0
[1] = Trace 1

Dependency: Only effective when p4710 = 6.

p4716[0...1] Trace, bit mask trigger, trigger condition / Trace Trig_cond

CU_G130_DP, CU_G130_PN, CU_G150_DP, CU_G150_PN	**Can be changed:** U, T	**Calculated:** -	**Access level:** 3
	Data type: Unsigned32	**Dynamic index:** -	**Func. diagram:** -
	P-Group: Trace and function generator	**Units group:** -	**Unit selection:** -
	Not for motor type: -	**Scaling:** -	**Expert list:** 0
	Min	**Max**	**Factory setting**
	0	4294967295	0

Description: Sets the trigger condition for bit mask trigger.

Index: [0] = Trace 0
[1] = Trace 1

Dependency: Only effective when p4710 = 6.

p4717 Measuring function, number of averaging operations / Meas fct avg qty

CU_G130_DP, CU_G130_PN, CU_G150_DP, CU_G150_PN	**Can be changed:** U, T	**Calculated:** -	**Access level:** 3
	Data type: Unsigned8	**Dynamic index:** -	**Func. diagram:** -
	P-Group: Trace and function generator	**Units group:** -	**Unit selection:** -
	Not for motor type: -	**Scaling:** -	**Expert list:** 0
	Min	**Max**	**Factory setting**
	0	255	0

Description: Sets the number of averaging operations for the measuring function.

p4718 Measuring function, number of stabilizing periods / MeasFct StabPerQty

CU_G130_DP, CU_G130_PN, CU_G150_DP, CU_G150_PN	**Can be changed:** U, T	**Calculated:** -	**Access level:** 3
	Data type: Unsigned8	**Dynamic index:** -	**Func. diagram:** -
	P-Group: Trace and function generator	**Units group:** -	**Unit selection:** -
	Not for motor type: -	**Scaling:** -	**Expert list:** 0
	Min	**Max**	**Factory setting**
	0	255	0

Description: Sets the number of stabilizing periods for the measuring function.

r4719[0...1] Trace trigger index / Trace Trig_index

CU_G130_DP, CU_G130_PN, CU_G150_DP, CU_G150_PN	**Can be changed:** -	**Calculated:** -	**Access level:** 3
	Data type: Unsigned32	**Dynamic index:** -	**Func. diagram:** -
	P-Group: Trace and function generator	**Units group:** -	**Unit selection:** -
	Not for motor type: -	**Scaling:** -	**Expert list:** 0
	Min	**Max**	**Factory setting**
	-	-	-

Description: Displays the trigger index in the trace buffer. The trigger event occurred at this point.

Index: [0] = Trace 0
[1] = Trace 1

© Siemens AG 2012 All Rights Reserved

Dependency: Only valid when p4705 = 4.

p4720[0...1] Trace recording cycle / Trace record_cyc

CU_G130_DP, CU_G130_PN, CU_G150_DP, CU_G150_PN	**Can be changed:** U, T	**Calculated:** -	**Access level:** 3
	Data type: FloatingPoint32	**Dynamic index:** -	**Func. diagram:** -
	P-Group: Trace and function generator	**Units group:** -	**Unit selection:** -
	Not for motor type: -	**Scaling:** -	**Expert list:** 0
	Min	**Max**	**Factory setting**
	0.000 [ms]	60000.000 [ms]	1.000 [ms]

Description: Sets the recording cycle for the trace.

Index: [0] = Trace 0
[1] = Trace 1

p4721[0...1] Trace recording time / Trace record_time

CU_G130_DP, CU_G130_PN, CU_G150_DP, CU_G150_PN	**Can be changed:** U, T	**Calculated:** -	**Access level:** 3
	Data type: FloatingPoint32	**Dynamic index:** -	**Func. diagram:** -
	P-Group: Trace and function generator	**Units group:** -	**Unit selection:** -
	Not for motor type: -	**Scaling:** -	**Expert list:** 0
	Min	**Max**	**Factory setting**
	0.000 [ms]	3600000.000 [ms]	1000.000 [ms]

Description: Sets the recording time for the trace.

Index: [0] = Trace 0
[1] = Trace 1

p4722[0...1] Trace trigger delay / Trace trig_delay

CU_G130_DP, CU_G130_PN, CU_G150_DP, CU_G150_PN	**Can be changed:** U, T	**Calculated:** -	**Access level:** 3
	Data type: FloatingPoint32	**Dynamic index:** -	**Func. diagram:** -
	P-Group: Trace and function generator	**Units group:** -	**Unit selection:** -
	Not for motor type: -	**Scaling:** -	**Expert list:** 0
	Min	**Max**	**Factory setting**
	-3600000.000 [ms]	3600000.000 [ms]	0.000 [ms]

Description: Sets the trigger delay for the trace.
Trigger delay < 0:
Pretrigger: Tracing (recording) starts the selected time before the trigger event actually occurs.
Trigger delay > 0:
Post trigger: Tracing does not start until the set time after the trigger event.

Index: [0] = Trace 0
[1] = Trace 1

p4723[0...1] Trace time slice cycle / Trace cycle

CU_G130_DP, CU_G130_PN, CU_G150_DP, CU_G150_PN	**Can be changed:** U, T	**Calculated:** -	**Access level:** 3
	Data type: FloatingPoint32	**Dynamic index:** -	**Func. diagram:** -
	P-Group: Trace and function generator	**Units group:** -	**Unit selection:** -
	Not for motor type: -	**Scaling:** -	**Expert list:** 0
	Min	**Max**	**Factory setting**
	0.03125 [ms]	4.00000 [ms]	0.12500 [ms]

Description: Sets the time slice cycle in which the trace is called.

Index: [0] = Trace 0
[1] = Trace 1

© Siemens AG 2012 All Rights Reserved

p4724[0...1] Trace average in the time range / Trace average

CU_G130_DP, CU_G130_PN, CU_G150_DP, CU_G150_PN

Can be changed: U, T	**Calculated:** -	**Access level:** 3
Data type: Unsigned8	**Dynamic index:** -	**Func. diagram:** -
P-Group: Trace and function generator	**Units group:** -	**Unit selection:** -
Not for motor type: -	**Scaling:** -	**Expert list:** 0
Min	**Max**	**Factory setting**
0000 bin	0001 bin	0000 bin

Description: Sets the averaging in the time range for the trace.

Index: [0] = Trace 0
[1] = Trace 1

r4725[0...1] Trace, data type 1 traced / Trace rec type 1

CU_G130_DP, CU_G130_PN, CU_G150_DP, CU_G150_PN

Can be changed: -	**Calculated:** -	**Access level:** 3
Data type: Unsigned32	**Dynamic index:** -	**Func. diagram:** -
P-Group: Trace and function generator	**Units group:** -	**Unit selection:** -
Not for motor type: -	**Scaling:** -	**Expert list:** 0
Min	**Max**	**Factory setting**
-	-	-

Description: Displays the recorded data type 1 for the trace.

Index: [0] = Trace 0
[1] = Trace 1

r4726[0...1] Trace, data type 2 traced / Trace rec type 2

CU_G130_DP, CU_G130_PN, CU_G150_DP, CU_G150_PN

Can be changed: -	**Calculated:** -	**Access level:** 3
Data type: Unsigned32	**Dynamic index:** -	**Func. diagram:** -
P-Group: Trace and function generator	**Units group:** -	**Unit selection:** -
Not for motor type: -	**Scaling:** -	**Expert list:** 0
Min	**Max**	**Factory setting**
-	-	-

Description: Displays the recorded data type 2 for the trace.

Index: [0] = Trace 0
[1] = Trace 1

r4727[0...1] Trace, data type 3 traced / Trace rec type 3

CU_G130_DP, CU_G130_PN, CU_G150_DP, CU_G150_PN

Can be changed: -	**Calculated:** -	**Access level:** 3
Data type: Unsigned32	**Dynamic index:** -	**Func. diagram:** -
P-Group: Trace and function generator	**Units group:** -	**Unit selection:** -
Not for motor type: -	**Scaling:** -	**Expert list:** 0
Min	**Max**	**Factory setting**
-	-	-

Description: Displays the recorded data type 3 for the trace.

Index: [0] = Trace 0
[1] = Trace 1

r4728[0...1] Trace, data type 4 traced / Trace rec type 4

CU_G130_DP, CU_G130_PN, CU_G150_DP, CU_G150_PN

Can be changed: -	**Calculated:** -	**Access level:** 3
Data type: Unsigned32	**Dynamic index:** -	**Func. diagram:** -
P-Group: Trace and function generator	**Units group:** -	**Unit selection:** -
Not for motor type: -	**Scaling:** -	**Expert list:** 0
Min	**Max**	**Factory setting**
-	-	-

Description: Displays the recorded data type 4 for the trace.

© Siemens AG 2012 All Rights Reserved

Index: [0] = Trace 0
[1] = Trace 1

r4729[0...1] Trace number of recorded values / Trace rec values

CU_G130_DP, CU_G130_PN, CU_G150_DP, CU_G150_PN

Can be changed: -	**Calculated:** -	**Access level:** 3
Data type: Unsigned32	**Dynamic index:** -	**Func. diagram:** -
P-Group: Trace and function generator	**Units group:** -	**Unit selection:** -
Not for motor type: -	**Scaling:** -	**Expert list:** 0
Min	**Max**	**Factory setting**
-	-	-

Description: Displays the number of traced values for each signal.

Index: [0] = Trace 0
[1] = Trace 1

Dependency: Only valid when p4705 = 4.

p4730[0...5] Trace record signal 0 / Trace record sig 0

CU_G130_DP, CU_G130_PN, CU_G150_DP, CU_G150_PN

Can be changed: U, T	**Calculated:** -	**Access level:** 3
Data type: Unsigned32	**Dynamic index:** -	**Func. diagram:** -
P-Group: Trace and function generator	**Units group:** -	**Unit selection:** -
Not for motor type: -	**Scaling:** -	**Expert list:** 0
Min	**Max**	**Factory setting**
-	-	0

Description: Selects the first signal to be traced.

Index: [0] = Trace 0 parameter in BICO format
[1] = Trace 1 parameter in BICO format
[2] = Trace 0 PINx with DO Id and chart Id
[3] = Trace 0 PINx with block Id and PIN Id
[4] = Trace 1 PINy with DO Id and chart Id
[5] = Trace 1 PINy with block Id and PIN Id

p4731[0...5] Trace record signal 1 / Trace record sig 1

CU_G130_DP, CU_G130_PN, CU_G150_DP, CU_G150_PN

Can be changed: U, T	**Calculated:** -	**Access level:** 3
Data type: Unsigned32	**Dynamic index:** -	**Func. diagram:** -
P-Group: Trace and function generator	**Units group:** -	**Unit selection:** -
Not for motor type: -	**Scaling:** -	**Expert list:** 0
Min	**Max**	**Factory setting**
-	-	0

Description: Selects the second signal to be traced.

Index: [0] = Trace 0 parameter in BICO format
[1] = Trace 1 parameter in BICO format
[2] = Trace 0 PINx with DO Id and chart Id
[3] = Trace 0 PINx with block Id and PIN Id
[4] = Trace 1 PINy with DO Id and chart Id
[5] = Trace 1 PINy with block Id and PIN Id

p4732[0...5] Trace record signal 2 / Trace record sig 2

CU_G130_DP, CU_G130_PN, CU_G150_DP, CU_G150_PN

Can be changed: U, T	**Calculated:** -	**Access level:** 3
Data type: Unsigned32	**Dynamic index:** -	**Func. diagram:** -
P-Group: Trace and function generator	**Units group:** -	**Unit selection:** -
Not for motor type: -	**Scaling:** -	**Expert list:** 0
Min	**Max**	**Factory setting**
-	-	0

Description: Selects the third signal to be traced.

Index: [0] = Trace 0 parameter in BICO format
[1] = Trace 1 parameter in BICO format

© Siemens AG 2012 All Rights Reserved

[2] = Trace 0 PINx with DO Id and chart Id
[3] = Trace 0 PINx with block Id and PIN Id
[4] = Trace 1 PINy with DO Id and chart Id
[5] = Trace 1 PINy with block Id and PIN Id

p4733[0...5] Trace record signal 3 / Trace record sig 3

CU_G130_DP, CU_G130_PN, CU_G150_DP, CU_G150_PN	**Can be changed:** U, T	**Calculated:** -	**Access level:** 3
	Data type: Unsigned32	**Dynamic index:** -	**Func. diagram:** -
	P-Group: Trace and function generator	**Units group:** -	**Unit selection:** -
	Not for motor type: -	**Scaling:** -	**Expert list:** 0
	Min	**Max**	**Factory setting**
	-	-	0

Description: Selects the fourth signal to be traced.

Index:
[0] = Trace 0 parameter in BICO format
[1] = Trace 1 parameter in BICO format
[2] = Trace 0 PINx with DO Id and chart Id
[3] = Trace 0 PINx with block Id and PIN Id
[4] = Trace 1 PINy with DO Id and chart Id
[5] = Trace 1 PINy with block Id and PIN Id

p4734[0...5] Trace record signal 4 / Trace record sig 4

CU_G130_DP, CU_G130_PN, CU_G150_DP, CU_G150_PN	**Can be changed:** U, T	**Calculated:** -	**Access level:** 3
	Data type: Unsigned32	**Dynamic index:** -	**Func. diagram:** -
	P-Group: Trace and function generator	**Units group:** -	**Unit selection:** -
	Not for motor type: -	**Scaling:** -	**Expert list:** 0
	Min	**Max**	**Factory setting**
	-	-	0

Description: Selects the fifth signal to be traced.

Index:
[0] = Trace 0 parameter in BICO format
[1] = Trace 1 parameter in BICO format
[2] = Trace 0 PINx with DO Id and chart Id
[3] = Trace 0 PINx with block Id and PIN Id
[4] = Trace 1 PINy with DO Id and chart Id
[5] = Trace 1 PINy with block Id and PIN Id

p4735[0...5] Trace record signal 5 / Trace record sig 5

CU_G130_DP, CU_G130_PN, CU_G150_DP, CU_G150_PN	**Can be changed:** U, T	**Calculated:** -	**Access level:** 3
	Data type: Unsigned32	**Dynamic index:** -	**Func. diagram:** -
	P-Group: Trace and function generator	**Units group:** -	**Unit selection:** -
	Not for motor type: -	**Scaling:** -	**Expert list:** 0
	Min	**Max**	**Factory setting**
	-	-	0

Description: Selects the sixth signal to be traced.

Index:
[0] = Trace 0 parameter in BICO format
[1] = Trace 1 parameter in BICO format
[2] = Trace 0 PINx with DO Id and chart Id
[3] = Trace 0 PINx with block Id and PIN Id
[4] = Trace 1 PINy with DO Id and chart Id
[5] = Trace 1 PINy with block Id and PIN Id

© Siemens AG 2012 All Rights Reserved

p4736[0...5] Trace record signal 6 / Trace record sig 6

CU_G130_DP, CU_G130_PN, CU_G150_DP, CU_G150_PN	**Can be changed:** U, T	**Calculated:** -	**Access level:** 3
	Data type: Unsigned32	**Dynamic index:** -	**Func. diagram:** -
	P-Group: Trace and function generator	**Units group:** -	**Unit selection:** -
	Not for motor type: -	**Scaling:** -	**Expert list:** 0
	Min	**Max**	**Factory setting**
	-	-	0

Description: Selects the seventh signal to be traced.

Index:
[0] = Trace 0 parameter in BICO format
[1] = Trace 1 parameter in BICO format
[2] = Trace 0 PINx with DO Id and chart Id
[3] = Trace 0 PINx with block Id and PIN Id
[4] = Trace 1 PINy with DO Id and chart Id
[5] = Trace 1 PINy with block Id and PIN Id

p4737[0...5] Trace record signal 7 / Trace record sig 7

CU_G130_DP, CU_G130_PN, CU_G150_DP, CU_G150_PN	**Can be changed:** U, T	**Calculated:** -	**Access level:** 3
	Data type: Unsigned32	**Dynamic index:** -	**Func. diagram:** -
	P-Group: Trace and function generator	**Units group:** -	**Unit selection:** -
	Not for motor type: -	**Scaling:** -	**Expert list:** 0
	Min	**Max**	**Factory setting**
	-	-	0

Description: Selects the eighth signal to be traced.

Index:
[0] = Trace 0 parameter in BICO format
[1] = Trace 1 parameter in BICO format
[2] = Trace 0 PINx with DO Id and chart Id
[3] = Trace 0 PINx with block Id and PIN Id
[4] = Trace 1 PINy with DO Id and chart Id
[5] = Trace 1 PINy with block Id and PIN Id

r4740[0...16383] Trace 0 trace buffer signal 0 floating point / Trace 0 tr sig 0

CU_G130_DP, CU_G130_PN, CU_G150_DP, CU_G150_PN	**Can be changed:** -	**Calculated:** -	**Access level:** 3
	Data type: FloatingPoint32	**Dynamic index:** -	**Func. diagram:** -
	P-Group: Trace and function generator	**Units group:** -	**Unit selection:** -
	Not for motor type: -	**Scaling:** -	**Expert list:** 0
	Min	**Max**	**Factory setting**
	-	-	-

Description: Displays the trace buffer (record buffer) for trace 0 and signal 0.

The trace (record) buffer is sub-divided into memory banks, each containing 16384 values. Parameter p4795 can be used to toggle between the individual banks.

Example A:

The first 16384 values of signal 0, trace 0 are to be read out.

In this case, memory bank 0 is set with p4795 = 0. The first 16384 values can now be read out using r4740[0] to r4740[16383].

Example B:

The values 16385 to 32768 from signal 0, trace 0 are to be read out.

In this case, memory bank 1 is set with p4795 = 1. The values can now be read out in r4740[0] to r4740[16383].

Dependency: Refer to: p4795

© Siemens AG 2012 All Rights Reserved

r4741[0...16383] Trace 0 trace buffer signal 1 floating point / Trace 0 tr sig 1

CU_G130_DP, CU_G130_PN, CU_G150_DP, CU_G150_PN	**Can be changed:** -	**Calculated:** -	**Access level:** 3
	Data type: FloatingPoint32	**Dynamic index:** -	**Func. diagram:** -
	P-Group: Trace and function generator	**Units group:** -	**Unit selection:** -
	Not for motor type: -	**Scaling:** -	**Expert list:** 0
	Min	**Max**	**Factory setting**
	-	-	-

Description: Displays the trace buffer (record buffer) for trace 0 and signal 1.

Dependency: Refer to: r4740, p4795

r4742[0...16383] Trace 0 trace buffer signal 2 floating point / Trace 0 tr sig 2

CU_G130_DP, CU_G130_PN, CU_G150_DP, CU_G150_PN	**Can be changed:** -	**Calculated:** -	**Access level:** 3
	Data type: FloatingPoint32	**Dynamic index:** -	**Func. diagram:** -
	P-Group: Trace and function generator	**Units group:** -	**Unit selection:** -
	Not for motor type: -	**Scaling:** -	**Expert list:** 0
	Min	**Max**	**Factory setting**
	-	-	-

Description: Displays the trace buffer (record buffer) for trace 0 and signal 2.

Dependency: Refer to: r4740, p4795

r4743[0...16383] Trace 0 trace buffer signal 3 floating point / Trace 0 tr sig 3

CU_G130_DP, CU_G130_PN, CU_G150_DP, CU_G150_PN	**Can be changed:** -	**Calculated:** -	**Access level:** 3
	Data type: FloatingPoint32	**Dynamic index:** -	**Func. diagram:** -
	P-Group: Trace and function generator	**Units group:** -	**Unit selection:** -
	Not for motor type: -	**Scaling:** -	**Expert list:** 0
	Min	**Max**	**Factory setting**
	-	-	-

Description: Displays the trace buffer (record buffer) for trace 0 and signal 3.

Dependency: Refer to: r4740, p4795

r4744[0...16383] Trace 0 trace buffer signal 4 floating point / Trace 0 tr sig 4

CU_G130_DP, CU_G130_PN, CU_G150_DP, CU_G150_PN	**Can be changed:** -	**Calculated:** -	**Access level:** 3
	Data type: FloatingPoint32	**Dynamic index:** -	**Func. diagram:** -
	P-Group: Trace and function generator	**Units group:** -	**Unit selection:** -
	Not for motor type: -	**Scaling:** -	**Expert list:** 0
	Min	**Max**	**Factory setting**
	-	-	-

Description: Displays the trace buffer (record buffer) for trace 0 and signal 4.

Dependency: Refer to: r4740, p4795

r4745[0...16383] Trace 0 trace buffer signal 5 floating point / Trace 0 tr sig 5

CU_G130_DP, CU_G130_PN, CU_G150_DP, CU_G150_PN	**Can be changed:** -	**Calculated:** -	**Access level:** 3
	Data type: FloatingPoint32	**Dynamic index:** -	**Func. diagram:** -
	P-Group: Trace and function generator	**Units group:** -	**Unit selection:** -
	Not for motor type: -	**Scaling:** -	**Expert list:** 0
	Min	**Max**	**Factory setting**
	-	-	-

Description: Displays the trace buffer (record buffer) for trace 0 and signal 5.

Dependency: Refer to: r4740, p4795

© Siemens AG 2012 All Rights Reserved

r4746[0...16383] Trace 0 trace buffer signal 6 floating point / Trace 0 tr sig 6

CU_G130_DP, CU_G130_PN, CU_G150_DP, CU_G150_PN	**Can be changed:** -	**Calculated:** -	**Access level:** 3
	Data type: FloatingPoint32	**Dynamic index:** -	**Func. diagram:** -
	P-Group: Trace and function generator	**Units group:** -	**Unit selection:** -
	Not for motor type: -	**Scaling:** -	**Expert list:** 0
	Min	**Max**	**Factory setting**
	-	-	-

Description: Displays the trace buffer (record buffer) for trace 0 and signal 6.

Dependency: Refer to: r4740, p4795

r4747[0...16383] Trace 0 trace buffer signal 7 floating point / Trace 0 tr sig 7

CU_G130_DP, CU_G130_PN, CU_G150_DP, CU_G150_PN	**Can be changed:** -	**Calculated:** -	**Access level:** 3
	Data type: FloatingPoint32	**Dynamic index:** -	**Func. diagram:** -
	P-Group: Trace and function generator	**Units group:** -	**Unit selection:** -
	Not for motor type: -	**Scaling:** -	**Expert list:** 0
	Min	**Max**	**Factory setting**
	-	-	-

Description: Displays the trace buffer (record buffer) for trace 0 and signal 7.

Dependency: Refer to: r4740, p4795

r4750[0...16383] Trace 1 trace buffer signal 0 floating point / Trace 1 trace sig0

CU_G130_DP, CU_G130_PN, CU_G150_DP, CU_G150_PN	**Can be changed:** -	**Calculated:** -	**Access level:** 3
	Data type: FloatingPoint32	**Dynamic index:** -	**Func. diagram:** -
	P-Group: Trace and function generator	**Units group:** -	**Unit selection:** -
	Not for motor type: -	**Scaling:** -	**Expert list:** 0
	Min	**Max**	**Factory setting**
	-	-	-

Description: Displays the trace buffer (record buffer) for trace 1 and signal 0.

Dependency: Refer to: r4740, p4795

r4751[0...16383] Trace 1 trace buffer signal 1 floating point / Trace 1 tr sig 1

CU_G130_DP, CU_G130_PN, CU_G150_DP, CU_G150_PN	**Can be changed:** -	**Calculated:** -	**Access level:** 3
	Data type: FloatingPoint32	**Dynamic index:** -	**Func. diagram:** -
	P-Group: Trace and function generator	**Units group:** -	**Unit selection:** -
	Not for motor type: -	**Scaling:** -	**Expert list:** 0
	Min	**Max**	**Factory setting**
	-	-	-

Description: Displays the trace buffer (record buffer) for trace 1 and signal 1.

Dependency: Refer to: r4740, p4795

r4752[0...16383] Trace 1 trace buffer signal 2 floating point / Trace 1 tr sig 2

CU_G130_DP, CU_G130_PN, CU_G150_DP, CU_G150_PN	**Can be changed:** -	**Calculated:** -	**Access level:** 3
	Data type: FloatingPoint32	**Dynamic index:** -	**Func. diagram:** -
	P-Group: Trace and function generator	**Units group:** -	**Unit selection:** -
	Not for motor type: -	**Scaling:** -	**Expert list:** 0
	Min	**Max**	**Factory setting**
	-	-	-

Description: Displays the trace buffer (record buffer) for trace 1 and signal 2.

Dependency: Refer to: r4740, p4795

© Siemens AG 2012 All Rights Reserved

r4753[0...16383] Trace 1 trace buffer signal 3 floating point / Trace 1 tr sig 3

CU_G130_DP, CU_G130_PN, CU_G150_DP, CU_G150_PN	**Can be changed:** -	**Calculated:** -	**Access level:** 3
	Data type: FloatingPoint32	**Dynamic index:** -	**Func. diagram:** -
	P-Group: Trace and function generator	**Units group:** -	**Unit selection:** -
	Not for motor type: -	**Scaling:** -	**Expert list:** 0
	Min	**Max**	**Factory setting**
	-	-	-

Description: Displays the trace buffer (record buffer) for trace 1 and signal 3.

Dependency: Refer to: r4740, p4795

r4754[0...16383] Trace 1 trace buffer signal 4 floating point / Trace 1 tr sig 4

CU_G130_DP, CU_G130_PN, CU_G150_DP, CU_G150_PN	**Can be changed:** -	**Calculated:** -	**Access level:** 3
	Data type: FloatingPoint32	**Dynamic index:** -	**Func. diagram:** -
	P-Group: Trace and function generator	**Units group:** -	**Unit selection:** -
	Not for motor type: -	**Scaling:** -	**Expert list:** 0
	Min	**Max**	**Factory setting**
	-	-	-

Description: Displays the trace buffer (record buffer) for trace 1 and signal 4.

Dependency: Refer to: r4740, p4795

r4755[0...16383] Trace 1 trace buffer signal 5 floating point / Trace 1 tr sig 5

CU_G130_DP, CU_G130_PN, CU_G150_DP, CU_G150_PN	**Can be changed:** -	**Calculated:** -	**Access level:** 3
	Data type: FloatingPoint32	**Dynamic index:** -	**Func. diagram:** -
	P-Group: Trace and function generator	**Units group:** -	**Unit selection:** -
	Not for motor type: -	**Scaling:** -	**Expert list:** 0
	Min	**Max**	**Factory setting**
	-	-	-

Description: Displays the trace buffer (record buffer) for trace 1 and signal 5.

Dependency: Refer to: r4740, p4795

r4756[0...16383] Trace 1 trace buffer signal 6 floating point / Trace 1 tr sig 6

CU_G130_DP, CU_G130_PN, CU_G150_DP, CU_G150_PN	**Can be changed:** -	**Calculated:** -	**Access level:** 3
	Data type: FloatingPoint32	**Dynamic index:** -	**Func. diagram:** -
	P-Group: Trace and function generator	**Units group:** -	**Unit selection:** -
	Not for motor type: -	**Scaling:** -	**Expert list:** 0
	Min	**Max**	**Factory setting**
	-	-	-

Description: Displays the trace buffer (record buffer) for trace 1 and signal 6.

Dependency: Refer to: r4740, p4795

r4757[0...16383] Trace 1 trace buffer signal 7 floating point / Trace 1 tr sig 7

CU_G130_DP, CU_G130_PN, CU_G150_DP, CU_G150_PN	**Can be changed:** -	**Calculated:** -	**Access level:** 3
	Data type: FloatingPoint32	**Dynamic index:** -	**Func. diagram:** -
	P-Group: Trace and function generator	**Units group:** -	**Unit selection:** -
	Not for motor type: -	**Scaling:** -	**Expert list:** 0
	Min	**Max**	**Factory setting**
	-	-	-

Description: Displays the trace buffer (record buffer) for trace 1 and signal 7.

Dependency: Refer to: r4740, p4795

© Siemens AG 2012 All Rights Reserved

r4760[0...16383] Trace 0 trace buffer signal 0 / Trace 0 tr sig 0

CU_G130_DP, CU_G130_PN, CU_G150_DP, CU_G150_PN	**Can be changed:** -	**Calculated:** -	**Access level:** 3
	Data type: Unsigned32	**Dynamic index:** -	**Func. diagram:** -
	P-Group: Trace and function generator	**Units group:** -	**Unit selection:** -
	Not for motor type: -	**Scaling:** -	**Expert list:** 0
	Min	**Max**	**Factory setting**
	-	-	-

Description: Displays the trace buffer (record buffer) for trace 0 and signal 0 as integer number.

Note: For signals, data type I32 or U32, the trace buffer is assigned as follows:
r4760[0] = value 0
r4760[1] = value 1
...
r4760[8191] = value 8191
For signals, data type I16 or U16, the trace buffer is assigned as follows:
r4760[0] = value 0 (bit 31 ... 16) and value 1 (bit 15 ... 0)
r4760[1] = value 2 (bit 31 ... 16) and value 3 (bit 15 ... 0)
...
r4760[8191] = value 16382 (bit 31 ... 16) and value 16383 (bit 15 ... 0)
For signals, data type I8 or U8, the trace buffer is assigned as follows:
r4760[0] = value 0 (bit 31 ... 24) value 1 (bit 23 ... 16) value 2 (bit 15 ... 8) value 3 (bit 7 ... 0)
r4760[1] = value 4 (bit 31 ... 24) value 5 (bit 23 ... 16) value 6 (bit 15 ... 8) value 7 (bit 7 ... 0)
...
r4760[8191] = value 32764 (bit 31 ... 24) value 32765 (bit 23 ... 16) value 32766 (bit 15 ... 8) value 32767 (bit 7 ... 0)

r4761[0...16383] Trace 0 trace buffer signal 1 / Trace 0 tr sig 1

CU_G130_DP, CU_G130_PN, CU_G150_DP, CU_G150_PN	**Can be changed:** -	**Calculated:** -	**Access level:** 3
	Data type: Unsigned32	**Dynamic index:** -	**Func. diagram:** -
	P-Group: Trace and function generator	**Units group:** -	**Unit selection:** -
	Not for motor type: -	**Scaling:** -	**Expert list:** 0
	Min	**Max**	**Factory setting**
	-	-	-

Description: Displays the trace buffer (record buffer) for trace 0 and signal 1.

Dependency: Refer to: r4760

r4762[0...16383] Trace 0 trace buffer signal 2 / Trace 0 tr sig 2

CU_G130_DP, CU_G130_PN, CU_G150_DP, CU_G150_PN	**Can be changed:** -	**Calculated:** -	**Access level:** 3
	Data type: Unsigned32	**Dynamic index:** -	**Func. diagram:** -
	P-Group: Trace and function generator	**Units group:** -	**Unit selection:** -
	Not for motor type: -	**Scaling:** -	**Expert list:** 0
	Min	**Max**	**Factory setting**
	-	-	-

Description: Displays the trace buffer (record buffer) for trace 0 and signal 2.

Dependency: Refer to: r4760

© Siemens AG 2012 All Rights Reserved

r4763[0...16383] Trace 0 trace buffer signal 3 / Trace 0 tr sig 3

CU_G130_DP, CU_G130_PN, CU_G150_DP, CU_G150_PN	**Can be changed:** -	**Calculated:** -	**Access level:** 3
	Data type: Unsigned32	**Dynamic index:** -	**Func. diagram:** -
	P-Group: Trace and function generator	**Units group:** -	**Unit selection:** -
	Not for motor type: -	**Scaling:** -	**Expert list:** 0
	Min	**Max**	**Factory setting**
	-	-	-

Description: Displays the trace buffer (record buffer) for trace 0 and signal 3.

Dependency: Refer to: r4760

r4764[0...16383] Trace 0 trace buffer signal 4 / Trace 0 tr sig 4

CU_G130_DP, CU_G130_PN, CU_G150_DP, CU_G150_PN	**Can be changed:** -	**Calculated:** -	**Access level:** 3
	Data type: Unsigned32	**Dynamic index:** -	**Func. diagram:** -
	P-Group: Trace and function generator	**Units group:** -	**Unit selection:** -
	Not for motor type: -	**Scaling:** -	**Expert list:** 0
	Min	**Max**	**Factory setting**
	-	-	-

Description: Displays the trace buffer (record buffer) for trace 0 and signal 4.

Dependency: Refer to: r4760

r4765[0...16383] Trace 0 trace buffer signal 5 / Trace 0 tr sig 5

CU_G130_DP, CU_G130_PN, CU_G150_DP, CU_G150_PN	**Can be changed:** -	**Calculated:** -	**Access level:** 3
	Data type: Unsigned32	**Dynamic index:** -	**Func. diagram:** -
	P-Group: Trace and function generator	**Units group:** -	**Unit selection:** -
	Not for motor type: -	**Scaling:** -	**Expert list:** 0
	Min	**Max**	**Factory setting**
	-	-	-

Description: Displays the trace buffer (record buffer) for trace 0 and signal 5.

Dependency: Refer to: r4760

r4766[0...16383] Trace 0 trace buffer signal 6 / Trace 0 tr sig 6

CU_G130_DP, CU_G130_PN, CU_G150_DP, CU_G150_PN	**Can be changed:** -	**Calculated:** -	**Access level:** 3
	Data type: Unsigned32	**Dynamic index:** -	**Func. diagram:** -
	P-Group: Trace and function generator	**Units group:** -	**Unit selection:** -
	Not for motor type: -	**Scaling:** -	**Expert list:** 0
	Min	**Max**	**Factory setting**
	-	-	-

Description: Displays the trace buffer (record buffer) for trace 0 and signal 6.

Dependency: Refer to: r4760

r4767[0...16383] Trace 0 trace buffer signal 7 / Trace 0 tr sig 7

CU_G130_DP, CU_G130_PN, CU_G150_DP, CU_G150_PN	**Can be changed:** -	**Calculated:** -	**Access level:** 3
	Data type: Unsigned32	**Dynamic index:** -	**Func. diagram:** -
	P-Group: Trace and function generator	**Units group:** -	**Unit selection:** -
	Not for motor type: -	**Scaling:** -	**Expert list:** 0
	Min	**Max**	**Factory setting**
	-	-	-

Description: Displays the trace buffer (record buffer) for trace 0 and signal 7.

Dependency: Refer to: r4760

© Siemens AG 2012 All Rights Reserved

r4770[0...16383] Trace 1 trace buffer signal 0 / Trace 1 trace sig0

CU_G130_DP, CU_G130_PN, CU_G150_DP, CU_G150_PN	**Can be changed:** -	**Calculated:** -	**Access level:** 3
	Data type: Unsigned32	**Dynamic index:** -	**Func. diagram:** -
	P-Group: Trace and function generator	**Units group:** -	**Unit selection:** -
	Not for motor type: -	**Scaling:** -	**Expert list:** 0
	Min	**Max**	**Factory setting**
	-	-	-

Description: Displays the trace buffer (record buffer) for trace 1 and signal 0.

Dependency: Refer to: r4760

r4771[0...16383] Trace 1 trace buffer signal 1 / Trace 1 tr sig 1

CU_G130_DP, CU_G130_PN, CU_G150_DP, CU_G150_PN	**Can be changed:** -	**Calculated:** -	**Access level:** 3
	Data type: Unsigned32	**Dynamic index:** -	**Func. diagram:** -
	P-Group: Trace and function generator	**Units group:** -	**Unit selection:** -
	Not for motor type: -	**Scaling:** -	**Expert list:** 0
	Min	**Max**	**Factory setting**
	-	-	-

Description: Displays the trace buffer (record buffer) for trace 1 and signal 1.

Dependency: Refer to: r4760

r4772[0...16383] Trace 1 trace buffer signal 2 / Trace 1 tr sig 2

CU_G130_DP, CU_G130_PN, CU_G150_DP, CU_G150_PN	**Can be changed:** -	**Calculated:** -	**Access level:** 3
	Data type: Unsigned32	**Dynamic index:** -	**Func. diagram:** -
	P-Group: Trace and function generator	**Units group:** -	**Unit selection:** -
	Not for motor type: -	**Scaling:** -	**Expert list:** 0
	Min	**Max**	**Factory setting**
	-	-	-

Description: Displays the trace buffer (record buffer) for trace 1 and signal 2.

Dependency: Refer to: r4760

r4773[0...16383] Trace 1 trace buffer signal 3 / Trace 1 tr sig 3

CU_G130_DP, CU_G130_PN, CU_G150_DP, CU_G150_PN	**Can be changed:** -	**Calculated:** -	**Access level:** 3
	Data type: Unsigned32	**Dynamic index:** -	**Func. diagram:** -
	P-Group: Trace and function generator	**Units group:** -	**Unit selection:** -
	Not for motor type: -	**Scaling:** -	**Expert list:** 0
	Min	**Max**	**Factory setting**
	-	-	-

Description: Displays the trace buffer (record buffer) for trace 1 and signal 3.

Dependency: Refer to: r4760

r4774[0...16383] Trace 1 trace buffer signal 4 / Trace 1 tr sig 4

CU_G130_DP, CU_G130_PN, CU_G150_DP, CU_G150_PN	**Can be changed:** -	**Calculated:** -	**Access level:** 3
	Data type: Unsigned32	**Dynamic index:** -	**Func. diagram:** -
	P-Group: Trace and function generator	**Units group:** -	**Unit selection:** -
	Not for motor type: -	**Scaling:** -	**Expert list:** 0
	Min	**Max**	**Factory setting**
	-	-	-

Description: Displays the trace buffer (record buffer) for trace 1 and signal 4.

Dependency: Refer to: r4760

© Siemens AG 2012 All Rights Reserved

r4775[0...16383] Trace 1 trace buffer signal 5 / Trace 1 tr sig 5

CU_G130_DP, CU_G130_PN, CU_G150_DP, CU_G150_PN	**Can be changed:** -	**Calculated:** -	**Access level:** 3
	Data type: Unsigned32	**Dynamic index:** -	**Func. diagram:** -
	P-Group: Trace and function generator	**Units group:** -	**Unit selection:** -
	Not for motor type: -	**Scaling:** -	**Expert list:** 0
	Min	**Max**	**Factory setting**
	-	-	-

Description: Displays the trace buffer (record buffer) for trace 1 and signal 5.

Dependency: Refer to: r4760

r4776[0...16383] Trace 1 trace buffer signal 6 / Trace 1 tr sig 6

CU_G130_DP, CU_G130_PN, CU_G150_DP, CU_G150_PN	**Can be changed:** -	**Calculated:** -	**Access level:** 3
	Data type: Unsigned32	**Dynamic index:** -	**Func. diagram:** -
	P-Group: Trace and function generator	**Units group:** -	**Unit selection:** -
	Not for motor type: -	**Scaling:** -	**Expert list:** 0
	Min	**Max**	**Factory setting**
	-	-	-

Description: Displays the trace buffer (record buffer) for trace 1 and signal 6.

Dependency: Refer to: r4760

r4777[0...16383] Trace 1 trace buffer signal 7 / Trace 1 tr sig 7

CU_G130_DP, CU_G130_PN, CU_G150_DP, CU_G150_PN	**Can be changed:** -	**Calculated:** -	**Access level:** 3
	Data type: Unsigned32	**Dynamic index:** -	**Func. diagram:** -
	P-Group: Trace and function generator	**Units group:** -	**Unit selection:** -
	Not for motor type: -	**Scaling:** -	**Expert list:** 0
	Min	**Max**	**Factory setting**
	-	-	-

Description: Displays the trace buffer (record buffer) for trace 1 and signal 7.

Dependency: Refer to: r4760

p4780[0...1] Trace physical address signal 0 / Trace PhyAddr Sig0

CU_G130_DP, CU_G130_PN, CU_G150_DP, CU_G150_PN	**Can be changed:** U, T	**Calculated:** -	**Access level:** 3
	Data type: Unsigned32	**Dynamic index:** -	**Func. diagram:** -
	P-Group: Trace and function generator	**Units group:** -	**Unit selection:** -
	Not for motor type: -	**Scaling:** -	**Expert list:** 0
	Min	**Max**	**Factory setting**
	0000 bin	1111 1111 1111 1111 1111 1111 1111 1111 bin	0000 bin

Description: Sets the physical address for the first signal to be traced.
The data type is defined using p4730.

Index: [0] = Trace 0
[1] = Trace 1

p4781[0...1] Trace physical address signal 1 / Trace PhyAddr Sig1

CU_G130_DP, CU_G130_PN, CU_G150_DP, CU_G150_PN	**Can be changed:** U, T	**Calculated:** -	**Access level:** 3
	Data type: Unsigned32	**Dynamic index:** -	**Func. diagram:** -
	P-Group: Trace and function generator	**Units group:** -	**Unit selection:** -
	Not for motor type: -	**Scaling:** -	**Expert list:** 0
	Min	**Max**	**Factory setting**
	0000 bin	1111 1111 1111 1111 1111 1111 1111 1111 bin	0000 bin

Description: Sets the physical address for the second signal to be traced.

© Siemens AG 2012 All Rights Reserved

The data type is defined using p4731.

Index: [0] = Trace 0
[1] = Trace 1

p4782[0...1] Trace physical address signal 2 / Trace PhyAddr Sig2

CU_G130_DP, CU_G130_PN, CU_G150_DP, CU_G150_PN

Can be changed: U, T	**Calculated:** -	**Access level:** 3
Data type: Unsigned32	**Dynamic index:** -	**Func. diagram:** -
P-Group: Trace and function generator	**Units group:** -	**Unit selection:** -
Not for motor type: -	**Scaling:** -	**Expert list:** 0
Min	**Max**	**Factory setting**
0000 bin	1111 1111 1111 1111 1111 1111 1111 1111 bin	0000 bin

Description: Sets the physical address for the third signal to be traced.
The data type is defined using p4732.

Index: [0] = Trace 0
[1] = Trace 1

p4783[0...1] Trace physical address signal 3 / Trace PhyAddr Sig3

CU_G130_DP, CU_G130_PN, CU_G150_DP, CU_G150_PN

Can be changed: U, T	**Calculated:** -	**Access level:** 3
Data type: Unsigned32	**Dynamic index:** -	**Func. diagram:** -
P-Group: Trace and function generator	**Units group:** -	**Unit selection:** -
Not for motor type: -	**Scaling:** -	**Expert list:** 0
Min	**Max**	**Factory setting**
0000 bin	1111 1111 1111 1111 1111 1111 1111 1111 bin	0000 bin

Description: Sets the physical address for the fourth signal to be traced.
The data type is defined using p4733.

Index: [0] = Trace 0
[1] = Trace 1

p4784[0...1] Trace physical address signal 4 / Trace PhyAddr Sig4

CU_G130_DP, CU_G130_PN, CU_G150_DP, CU_G150_PN

Can be changed: U, T	**Calculated:** -	**Access level:** 3
Data type: Unsigned32	**Dynamic index:** -	**Func. diagram:** -
P-Group: Trace and function generator	**Units group:** -	**Unit selection:** -
Not for motor type: -	**Scaling:** -	**Expert list:** 0
Min	**Max**	**Factory setting**
0000 bin	1111 1111 1111 1111 1111 1111 1111 1111 bin	0000 bin

Description: Sets the physical address for the fifth signal to be traced.
The data type is defined using p4734.

Index: [0] = Trace 0
[1] = Trace 1

p4785[0...1] Trace physical address signal 5 / Trace PhyAddr Sig5

CU_G130_DP, CU_G130_PN, CU_G150_DP, CU_G150_PN

Can be changed: U, T	**Calculated:** -	**Access level:** 3
Data type: Unsigned32	**Dynamic index:** -	**Func. diagram:** -
P-Group: Trace and function generator	**Units group:** -	**Unit selection:** -
Not for motor type: -	**Scaling:** -	**Expert list:** 0
Min	**Max**	**Factory setting**
0000 bin	1111 1111 1111 1111 1111 1111 1111 1111 bin	0000 bin

Description: Sets the physical address for the sixth signal to be traced.
The data type is defined using p4735.

Index: [0] = Trace 0
[1] = Trace 1

© Siemens AG 2012 All Rights Reserved

p4786[0...1] Trace physical address signal 6 / Trace PhyAddr Sig6

CU_G130_DP, CU_G130_PN, CU_G150_DP, CU_G150_PN

Can be changed: U, T	**Calculated:** -	**Access level:** 3
Data type: Unsigned32	**Dynamic index:** -	**Func. diagram:** -
P-Group: Trace and function generator	**Units group:** -	**Unit selection:** -
Not for motor type: -	**Scaling:** -	**Expert list:** 0
Min	**Max**	**Factory setting**
0000 bin	1111 1111 1111 1111 1111 1111 1111 1111 bin	0000 bin

Description: Sets the physical address for the seventh signal to be traced.
The data type is defined using p4736.

Index: [0] = Trace 0
[1] = Trace 1

p4787[0...1] Trace physical address signal 7 / Trace PhyAddr Sig7

CU_G130_DP, CU_G130_PN, CU_G150_DP, CU_G150_PN

Can be changed: U, T	**Calculated:** -	**Access level:** 3
Data type: Unsigned32	**Dynamic index:** -	**Func. diagram:** -
P-Group: Trace and function generator	**Units group:** -	**Unit selection:** -
Not for motor type: -	**Scaling:** -	**Expert list:** 0
Min	**Max**	**Factory setting**
0000 bin	1111 1111 1111 1111 1111 1111 1111 1111 bin	0000 bin

Description: Sets the physical address for the eighth signal to be traced.
The data type is defined using p4737.

Index: [0] = Trace 0
[1] = Trace 1

p4789[0...1] Trace physical address trigger signal / Trace PhyAddr Trig

CU_G130_DP, CU_G130_PN, CU_G150_DP, CU_G150_PN

Can be changed: U, T	**Calculated:** -	**Access level:** 3
Data type: Unsigned32	**Dynamic index:** -	**Func. diagram:** -
P-Group: Trace and function generator	**Units group:** -	**Unit selection:** -
Not for motor type: -	**Scaling:** -	**Expert list:** 0
Min	**Max**	**Factory setting**
0000 hex	FFFF FFFF hex	0000 hex

Description: Sets the physical address for the trigger signal.
The data type is defined by making the appropriate selection in p4711.

Index: [0] = Trace 0
[1] = Trace 1

r4790[0...1] Trace, data type 5 traced / Trace rec type 5

CU_G130_DP, CU_G130_PN, CU_G150_DP, CU_G150_PN

Can be changed: -	**Calculated:** -	**Access level:** 3
Data type: Unsigned32	**Dynamic index:** -	**Func. diagram:** -
P-Group: Trace and function generator	**Units group:** -	**Unit selection:** -
Not for motor type: -	**Scaling:** -	**Expert list:** 0
Min	**Max**	**Factory setting**
-	-	-

Description: Displays the recorded data type 5 for the trace.

Index: [0] = Trace 0
[1] = Trace 1

© Siemens AG 2012 All Rights Reserved

r4791[0...1] Trace, data type 6 traced / Trace rec type 6

CU_G130_DP, CU_G130_PN, CU_G150_DP, CU_G150_PN	**Can be changed:** -	**Calculated:** -	**Access level:** 3
	Data type: Unsigned32	**Dynamic index:** -	**Func. diagram:** -
	P-Group: Trace and function generator	**Units group:** -	**Unit selection:** -
	Not for motor type: -	**Scaling:** -	**Expert list:** 0
	Min	**Max**	**Factory setting**
	-	-	-

Description: Displays the recorded data type 6 for the trace.

Index: [0] = Trace 0
[1] = Trace 1

r4792[0...1] Trace, data type 7 traced / Trace rec type 7

CU_G130_DP, CU_G130_PN, CU_G150_DP, CU_G150_PN	**Can be changed:** -	**Calculated:** -	**Access level:** 3
	Data type: Unsigned32	**Dynamic index:** -	**Func. diagram:** -
	P-Group: Trace and function generator	**Units group:** -	**Unit selection:** -
	Not for motor type: -	**Scaling:** -	**Expert list:** 0
	Min	**Max**	**Factory setting**
	-	-	-

Description: Displays the recorded data type 7 for the trace.

Index: [0] = Trace 0
[1] = Trace 1

r4793[0...1] Trace, data type 8 traced / Trace rec type 8

CU_G130_DP, CU_G130_PN, CU_G150_DP, CU_G150_PN	**Can be changed:** -	**Calculated:** -	**Access level:** 3
	Data type: Unsigned32	**Dynamic index:** -	**Func. diagram:** -
	P-Group: Trace and function generator	**Units group:** -	**Unit selection:** -
	Not for motor type: -	**Scaling:** -	**Expert list:** 0
	Min	**Max**	**Factory setting**
	-	-	-

Description: Displays the recorded data type 8 for the trace.

Index: [0] = Trace 0
[1] = Trace 1

p4795 Trace memory bank changeover / Trace mem changeov

CU_G130_DP, CU_G130_PN, CU_G150_DP, CU_G150_PN	**Can be changed:** U, T	**Calculated:** -	**Access level:** 3
	Data type: Unsigned32	**Dynamic index:** -	**Func. diagram:** -
	P-Group: Trace and function generator	**Units group:** -	**Unit selection:** -
	Not for motor type: -	**Scaling:** -	**Expert list:** 0
	Min	**Max**	**Factory setting**
	0	500	0

Description: Changes over the memory bank to read out the contents of the trace buffer.

Dependency: Refer to: r4740, r4741, r4742, r4743, r4750, r4751, r4752, r4753

r4799 Trace memory location free / Trace mem free

CU_G130_DP, CU_G130_PN, CU_G150_DP, CU_G150_PN	**Can be changed:** -	**Calculated:** -	**Access level:** 3
	Data type: Unsigned32	**Dynamic index:** -	**Func. diagram:** -
	P-Group: Trace and function generator	**Units group:** -	**Unit selection:** -
	Not for motor type: -	**Scaling:** -	**Expert list:** 0
	Min	**Max**	**Factory setting**
	-	-	-

Description: Displays the free memory for the trace in bytes.

Dependency: Refer to: r4708

© Siemens AG 2012 All Rights Reserved

p4800 Function generator control / FG control

CU_G130_DP, CU_G130_PN, CU_G150_DP, CU_G150_PN

Can be changed: U, T	**Calculated:** -	**Access level:** 3
Data type: Integer16	**Dynamic index:** -	**Func. diagram:** -
P-Group: Trace and function generator	**Units group:** -	**Unit selection:** -
Not for motor type: -	**Scaling:** -	**Expert list:** 0
Min	**Max**	**Factory setting**
0	3	0

Description: The function generator is started with p4800 = 1.
The signal is only generated for a 1 signal of binector input p4819.

Value:
0: Stop function generator
1: Start function generator
2: Check function generator parameterization
3: Start function generator without enable signals

Dependency: Refer to: p4819

r4805 Function generator status / FG status

CU_G130_DP, CU_G130_PN, CU_G150_DP, CU_G150_PN

Can be changed: -	**Calculated:** -	**Access level:** 3
Data type: Integer16	**Dynamic index:** -	**Func. diagram:** -
P-Group: Trace and function generator	**Units group:** -	**Unit selection:** -
Not for motor type: -	**Scaling:** -	**Expert list:** 0
Min	**Max**	**Factory setting**
0	6	-

Description: Displays the actual status of the function generator.

Value:
0: Inactive
1: Generate accelerating ramp to offset
2: Generate parameterized signal shape
3: Generate braking ramp
4: Function generator stopped due to missing enable signals
5: Function generator waits for BI: p4819
6: Function generator parameterization has been checked

Dependency: Refer to: p4800, p4819

r4806.0 BO: Function generator status signal / FG status signal

CU_G130_DP, CU_G130_PN, CU_G150_DP, CU_G150_PN

Can be changed: -	**Calculated:** -	**Access level:** 3
Data type: Unsigned32	**Dynamic index:** -	**Func. diagram:** -
P-Group: Trace and function generator	**Units group:** -	**Unit selection:** -
Not for motor type: -	**Scaling:** -	**Expert list:** 0
Min	**Max**	**Factory setting**
-	-	-

Description: Displays the status of the function generator.
0 signal: Function generator inactive
1 signal: Function generator running

Bit field:

Bit	Signal name	1 signal	0 signal	FP
00	Bit 0	ON	OFF	-

p4810 Function generator mode / FG operating mode

CU_G130_DP, CU_G130_PN, CU_G150_DP, CU_G150_PN

Can be changed: U, T	**Calculated:** -	**Access level:** 3
Data type: Integer16	**Dynamic index:** -	**Func. diagram:** -
P-Group: Trace and function generator	**Units group:** -	**Unit selection:** -
Not for motor type: -	**Scaling:** -	**Expert list:** 0
Min	**Max**	**Factory setting**
0	99	0

Description: Sets the operating mode of the function generator.

© Siemens AG 2012 All Rights Reserved

Value:
0: Connection at connector output r4818
1: Connection at current setpoint after filter and r4818
2: Connection as disturbing torque and r4818
3: Connection at speed setpoint after filter and r4818
4: Connection at current setpoint before filter and r4818
5: Connection at speed setpoint before filter and r4818
6: Connection for free measurement function r4818 and r4834
99: Connection at physical address and r4818

p4812 Function generator physical address / FG phys address

CU_G130_DP, CU_G130_PN, CU_G150_DP, CU_G150_PN

Can be changed: U, T	**Calculated:** -	**Access level:** 3
Data type: Unsigned32	**Dynamic index:** -	**Func. diagram:** -
P-Group: Trace and function generator	**Units group:** -	**Unit selection:** -
Not for motor type: -	**Scaling:** -	**Expert list:** 0
Min	**Max**	**Factory setting**
0	4294967295	0

Description: Sets the physical address where the function generator is to be connected.

Dependency: Only effective when p4810 = 99.

p4813 Function generator physical address reference value / FG phys addr ref

CU_G130_DP, CU_G130_PN, CU_G150_DP, CU_G150_PN

Can be changed: U, T	**Calculated:** -	**Access level:** 3
Data type: FloatingPoint32	**Dynamic index:** -	**Func. diagram:** -
P-Group: Trace and function generator	**Units group:** -	**Unit selection:** -
Not for motor type: -	**Scaling:** -	**Expert list:** 0
Min	**Max**	**Factory setting**
1.00	1000000.00	1.00

Description: Sets the reference value for 100 % for referred inputs.

Dependency: Only effective when p4810 = 99.

p4815[0...2] Function generator drive number / FG drive number

CU_G130_DP, CU_G130_PN, CU_G150_DP, CU_G150_PN

Can be changed: U, T	**Calculated:** -	**Access level:** 3
Data type: Unsigned16	**Dynamic index:** -	**Func. diagram:** -
P-Group: Trace and function generator	**Units group:** -	**Unit selection:** -
Not for motor type: -	**Scaling:** -	**Expert list:** 0
Min	**Max**	**Factory setting**
0	65535	0

Description: Selects the required drive where the function generator is to be connected.

Index:
[0] = First drive for connection
[1] = Second drive for connection
[2] = Third drive for connection

Dependency: Only effective when p4810 = 1, 2, 3, 4 or 5.

Note: For the function generator, only type SERVO, VECTOR or DC_CTRL type drives can be used.

p4816 Function generator output signal integer number scaling / FG outp integ scal

CU_G130_DP, CU_G130_PN, CU_G150_DP, CU_G150_PN

Can be changed: U, T	**Calculated:** -	**Access level:** 4
Data type: Integer32	**Dynamic index:** -	**Func. diagram:** -
P-Group: -	**Units group:** -	**Unit selection:** -
Not for motor type: -	**Scaling:** -	**Expert list:** 1
Min	**Max**	**Factory setting**
-2147483648	2147483647	0

Description: Sets the scaling for the integer number of the output signal for the function generator.

Dependency: Refer to: r4805, r4817

Note: The parameter can only be changed in the following operating states:
r4805 = 0, 4, 6

© Siemens AG 2012 All Rights Reserved

r4817 CO: Function generator output signal integer number / FG outp integ no.

CU_G130_DP, CU_G130_PN, CU_G150_DP, CU_G150_PN

Can be changed: -	**Calculated:** -	**Access level:** 4
Data type: Integer32	**Dynamic index:** -	**Func. diagram:** -
P-Group: Trace and function generator	**Units group:** -	**Unit selection:** -
Not for motor type: -	**Scaling:** -	**Expert list:** 0
Min	**Max**	**Factory setting**
-	-	-

Description: Display and connector output for the integer number of the output signal for the function generator.

Dependency: Refer to: p4816

Note: The value is output independent of the function generator operating mode.

r4818 CO: Function generator output signal / FG outp_sig

CU_G130_DP, CU_G130_PN, CU_G150_DP, CU_G150_PN

Can be changed: -	**Calculated:** -	**Access level:** 3
Data type: FloatingPoint32	**Dynamic index:** -	**Func. diagram:** -
P-Group: Trace and function generator	**Units group:** -	**Unit selection:** -
Not for motor type: -	**Scaling:** PERCENT	**Expert list:** 0
Min	**Max**	**Factory setting**
- [%]	- [%]	- [%]

Description: Displays the output signal for the function generator.

Dependency: Refer to: p4810

Note: The value is displayed independently of the function generator mode.

p4819 BI: Function generator control / FG control

CU_G130_DP, CU_G130_PN, CU_G150_DP, CU_G150_PN

Can be changed: U, T	**Calculated:** -	**Access level:** 3
Data type: Unsigned32 / Binary	**Dynamic index:** -	**Func. diagram:** -
P-Group: Trace and function generator	**Units group:** -	**Unit selection:** -
Not for motor type: -	**Scaling:** -	**Expert list:** 0
Min	**Max**	**Factory setting**
-	-	1

Description: Sets the signal source to control the function generator.

When the function generator is running, signal generation is stopped with a 0 signal from BI: p4819 and p4800 is set to 0.

Dependency: Refer to: p4800

p4820 Function generator signal shape / FG signal shape

CU_G130_DP, CU_G130_PN, CU_G150_DP, CU_G150_PN

Can be changed: U, T	**Calculated:** -	**Access level:** 3
Data type: Integer16	**Dynamic index:** -	**Func. diagram:** -
P-Group: Trace and function generator	**Units group:** -	**Unit selection:** -
Not for motor type: -	**Scaling:** -	**Expert list:** 0
Min	**Max**	**Factory setting**
1	5	1

Description: Sets the signal to be generated for the function generator.

Value:
1: Square-wave
2: Staircase
3: Delta
4: Binary noise - PRBS (Pseudo Random Binary Signal)
5: Sine-wave

© Siemens AG 2012 All Rights Reserved

p4821 Function generator period / FG period duration

CU_G130_DP, CU_G130_PN, CU_G150_DP, CU_G150_PN

Can be changed: U, T	**Calculated:** -	**Access level:** 3
Data type: FloatingPoint32	**Dynamic index:** -	**Func. diagram:** -
P-Group: Trace and function generator	**Units group:** -	**Unit selection:** -
Not for motor type: -	**Scaling:** -	**Expert list:** 0
Min	**Max**	**Factory setting**
0.00 [ms]	60000.00 [ms]	1000.00 [ms]

Description: Sets the period of the signal to be generated for the function generator.

Dependency: Ineffective when p4820 = 4 (PRBS).

p4822 Function generator pulse width / FG pulse width

CU_G130_DP, CU_G130_PN, CU_G150_DP, CU_G150_PN

Can be changed: U, T	**Calculated:** -	**Access level:** 3
Data type: FloatingPoint32	**Dynamic index:** -	**Func. diagram:** -
P-Group: Trace and function generator	**Units group:** -	**Unit selection:** -
Not for motor type: -	**Scaling:** -	**Expert list:** 0
Min	**Max**	**Factory setting**
0.00 [ms]	60000.00 [ms]	500.00 [ms]

Description: Sets the pulse width for the signal to be generated for the function generator.

Dependency: Only effective when p4820 = 1 (square-wave).

p4823 Function generator bandwidth / FG bandwidth

CU_G130_DP, CU_G130_PN, CU_G150_DP, CU_G150_PN

Can be changed: U, T	**Calculated:** -	**Access level:** 3
Data type: FloatingPoint32	**Dynamic index:** -	**Func. diagram:** -
P-Group: Trace and function generator	**Units group:** -	**Unit selection:** -
Not for motor type: -	**Scaling:** -	**Expert list:** 0
Min	**Max**	**Factory setting**
0.0025 [Hz]	16000.0000 [Hz]	4000.0000 [Hz]

Description: Sets the bandwidth for the signal to be generated for the function generator.

Dependency: Only effective when p4820 = 4 (PRBS).
Refer to: p4830
Refer to: A02041

p4824 Function generator amplitude / FG amplitude

CU_G130_DP, CU_G130_PN, CU_G150_DP, CU_G150_PN

Can be changed: U, T	**Calculated:** -	**Access level:** 3
Data type: FloatingPoint32	**Dynamic index:** -	**Func. diagram:** -
P-Group: Trace and function generator	**Units group:** -	**Unit selection:** -
Not for motor type: -	**Scaling:** -	**Expert list:** 0
Min	**Max**	**Factory setting**
-1600.00 [%]	1600.00 [%]	5.00 [%]

Description: Sets the amplitude for the signal to be generated for the function generator.

Dependency: Units are dependent on p4810.
If p4810 = 1, 2, 4: The amplitude is referred to p2002 (reference current).
If p4810 = 3, 5: The amplitude is referred to p2000 (reference speed).

© Siemens AG 2012 All Rights Reserved

p4825 Function generator 2nd amplitude / FG 2nd amplitude

CU_G130_DP, CU_G130_PN, CU_G150_DP, CU_G150_PN

Can be changed: U, T	**Calculated:** -	**Access level:** 3
Data type: FloatingPoint32	**Dynamic index:** -	**Func. diagram:** -
P-Group: Trace and function generator	**Units group:** -	**Unit selection:** -
Not for motor type: -	**Scaling:** -	**Expert list:** 0
Min	**Max**	**Factory setting**
-1600.00 [%]	1600.00 [%]	7.00 [%]

Description: Sets the second amplitude for the signal to be generated for the function generator.

Dependency: Only effective for p4820 = 2 (staircase).
Units are dependent on p4810.
If p4810 = 1, 2, 4: The amplitude is referred to p2002 (reference current).
If p4810 = 3, 5: The amplitude is referred to p2000 (reference speed).

p4826 Function generator offset / FG offset

CU_G130_DP, CU_G130_PN, CU_G150_DP, CU_G150_PN

Can be changed: U, T	**Calculated:** -	**Access level:** 3
Data type: FloatingPoint32	**Dynamic index:** -	**Func. diagram:** -
P-Group: Trace and function generator	**Units group:** -	**Unit selection:** -
Not for motor type: -	**Scaling:** -	**Expert list:** 0
Min	**Max**	**Factory setting**
-1600.00 [%]	1600.00 [%]	0.00 [%]

Description: Sets the offset (DC component) of the signal to be generated for the function generator.

Dependency: Units are dependent on p4810.
If p4810 = 1, 2, 4: The offset is referred to p2002 (reference current).
If p4810 = 3, 5: The offset is referred to p2000 (reference speed).
If p4810 = 2: In order to avoid the undesirable effects of play (backlash), the offset does not act on the current setpoint, but instead on the speed setpoint.

p4827 Function generator ramp-up time to offset / FG ramp-up offset

CU_G130_DP, CU_G130_PN, CU_G150_DP, CU_G150_PN

Can be changed: U, T	**Calculated:** -	**Access level:** 3
Data type: FloatingPoint32	**Dynamic index:** -	**Func. diagram:** -
P-Group: Trace and function generator	**Units group:** -	**Unit selection:** -
Not for motor type: -	**Scaling:** -	**Expert list:** 0
Min	**Max**	**Factory setting**
0.00 [ms]	100000.00 [ms]	32.00 [ms]

Description: Sets the ramp-up time to the offset for the function generator.

p4828 Function generator lower limit / FG lower limit

CU_G130_DP, CU_G130_PN, CU_G150_DP, CU_G150_PN

Can be changed: U, T	**Calculated:** -	**Access level:** 3
Data type: FloatingPoint32	**Dynamic index:** -	**Func. diagram:** -
P-Group: Trace and function generator	**Units group:** -	**Unit selection:** -
Not for motor type: -	**Scaling:** -	**Expert list:** 0
Min	**Max**	**Factory setting**
-10000.00 [%]	0.00 [%]	-100.00 [%]

Description: Sets the lower limit for the function generator.

Dependency: For p4810 = 2 the limit only applies to the current setpoint, but not the speed setpoint (offset).

© Siemens AG 2012 All Rights Reserved

p4829 Function generator upper limit / FG upper limit

CU_G130_DP, CU_G130_PN, CU_G150_DP, CU_G150_PN

Can be changed: U, T	**Calculated:** -	**Access level:** 3
Data type: FloatingPoint32	**Dynamic index:** -	**Func. diagram:** -
P-Group: Trace and function generator	**Units group:** -	**Unit selection:** -
Not for motor type: -	**Scaling:** -	**Expert list:** 0
Min	**Max**	**Factory setting**
0.00 [%]	10000.00 [%]	100.00 [%]

Description: Sets the upper limit for the function generator.

Dependency: For p4810 = 2 the limit only applies to the current setpoint, but not the speed setpoint (offset).

p4830 Function generator time slice cycle / FG time slice

CU_G130_DP, CU_G130_PN, CU_G150_DP, CU_G150_PN

Can be changed: U, T	**Calculated:** -	**Access level:** 3
Data type: FloatingPoint32	**Dynamic index:** -	**Func. diagram:** -
P-Group: Trace and function generator	**Units group:** -	**Unit selection:** -
Not for motor type: -	**Scaling:** -	**Expert list:** 0
Min	**Max**	**Factory setting**
0.03125 [ms]	2.00000 [ms]	0.12500 [ms]

Description: Sets the time slice cycle in which the function generator is called.

p4831 Function generator amplitude scaling / FG amplitude scal

CU_G130_DP, CU_G130_PN, CU_G150_DP, CU_G150_PN

Can be changed: U, T	**Calculated:** -	**Access level:** 3
Data type: FloatingPoint32	**Dynamic index:** -	**Func. diagram:** -
P-Group: Trace and function generator	**Units group:** -	**Unit selection:** -
Not for motor type: -	**Scaling:** -	**Expert list:** 0
Min	**Max**	**Factory setting**
0.00000 [%]	200.00000 [%]	100.00000 [%]

Description: Sets the scaling for the amplitude of the signal waveforms for all output channels.
The value can be changed while the function generator is running.

p4832[0...2] Function generator amplitude scaling / FG amplitude scal

CU_G130_DP, CU_G130_PN, CU_G150_DP, CU_G150_PN

Can be changed: U, T	**Calculated:** -	**Access level:** 3
Data type: FloatingPoint32	**Dynamic index:** -	**Func. diagram:** -
P-Group: Trace and function generator	**Units group:** -	**Unit selection:** -
Not for motor type: -	**Scaling:** -	**Expert list:** 0
Min	**Max**	**Factory setting**
-340.28235E36 [%]	340.28235E36 [%]	100.00000 [%]

Description: Sets the scaling for the amplitude of the signal waveforms separately for each output channel.
The value cannot be changed while the function generator is running.

Index:
[0] = First drive for connection
[1] = Second drive for connection
[2] = Third drive for connection

p4833[0...2] Function generator offset scaling / FG offset scal

CU_G130_DP, CU_G130_PN, CU_G150_DP, CU_G150_PN

Can be changed: U, T	**Calculated:** -	**Access level:** 3
Data type: FloatingPoint32	**Dynamic index:** -	**Func. diagram:** -
P-Group: Trace and function generator	**Units group:** -	**Unit selection:** -
Not for motor type: -	**Scaling:** -	**Expert list:** 0
Min	**Max**	**Factory setting**
-340.28235E36 [%]	340.28235E36 [%]	100.00000 [%]

Description: Sets the scaling for the offset of the signal waveforms separately for each output channel.
The value cannot be changed while the function generator is running.

© Siemens AG 2012 All Rights Reserved

Index: [0] = First drive for connection
[1] = Second drive for connection
[2] = Third drive for connection

r4834[0...4] CO: Function generator free measurement output signal / FG fr MeasFct outp

CU_G130_DP, CU_G130_PN, CU_G150_DP, CU_G150_PN

Can be changed: -	**Calculated:** -	**Access level:** 3
Data type: FloatingPoint32	**Dynamic index:** -	**Func. diagram:** -
P-Group: Trace and function generator	**Units group:** -	**Unit selection:** -
Not for motor type: -	**Scaling:** PERCENT	**Expert list:** 0
Min	**Max**	**Factory setting**
- [%]	- [%]	- [%]

Description: Displays the output signal for the free measurement function.

Index: [0] = Signal 1
[1] = Signal 2
[2] = Signal 3
[3] = Signal 4
[4] = Signal 5

Dependency: Refer to: p4810

Note: The signals are only output in the "free measurement function" operating mode (p4810 = 6)

p4835[0...4] Function generator free measurement function scaling / FG fr MeasFct scal

CU_G130_DP, CU_G130_PN, CU_G150_DP, CU_G150_PN

Can be changed: U, T	**Calculated:** -	**Access level:** 3
Data type: FloatingPoint32	**Dynamic index:** -	**Func. diagram:** -
P-Group: -	**Units group:** -	**Unit selection:** -
Not for motor type: -	**Scaling:** -	**Expert list:** 1
Min	**Max**	**Factory setting**
-200.00000 [%]	200.00000 [%]	100.00000 [%]

Description: Sets the scaling of the output signals for the free measurement function.

Index: [0] = Signal 1
[1] = Signal 2
[2] = Signal 3
[3] = Signal 4
[4] = Signal 5

Note: The parameter cannot be changed when the measurement function has been started (r4706 = 2, 3).

r4950 OA application count / OA no

All objects

Can be changed: -	**Calculated:** -	**Access level:** 4
Data type: Unsigned16	**Dynamic index:** -	**Func. diagram:** -
P-Group: OEM range	**Units group:** -	**Unit selection:** -
Not for motor type: -	**Scaling:** -	**Expert list:** 1
Min	**Max**	**Factory setting**
0	10	-

Description: Displays the number of OA applications installed on the memory card/device memory.

Dependency: Refer to: r4951, r4952, r4955, p4956, r4957, r4958, r4959, r4960

Note: OA: Open Architecture

© Siemens AG 2012 All Rights Reserved

r4951 OA application identifier, total length / OA ID length

B_INF, CU_G130_DP, CU_G130_PN, CU_G150_DP, CU_G150_PN, TM150, TM54F_MA, TM54F_SL, VECTOR_G

Can be changed: -	**Calculated:** -	**Access level:** 4
Data type: Unsigned16	**Dynamic index:** -	**Func. diagram:** -
P-Group: OEM range	**Units group:** -	**Unit selection:** -
Not for motor type: -	**Scaling:** -	**Expert list:** 1

Min	Max	Factory setting
0	90	-

Description: Displays the total length of the IDs of all the OA applications installed on the memory card/device memory.

Dependency: Refer to: r4950, r4952, r4955, p4956, r4957, r4958, r4959, r4960

Note: The identifier of an OA application comprises a maximum of 8 characters plus separator.

r4951 OA application identifier, total length / OA ID length

ENC, HUB, TB30, TM31

Can be changed: -	**Calculated:** -	**Access level:** 4
Data type: Unsigned16	**Dynamic index:** -	**Func. diagram:** -
P-Group: OEM range	**Units group:** -	**Unit selection:** -
Not for motor type: -	**Scaling:** -	**Expert list:** 0

Min	Max	Factory setting
0	90	-

Description: Displays the total length of the IDs of all the OA applications installed on the memory card/device memory.

Dependency: Refer to: r4950, r4952, r4955, p4956, r4957, r4958, r4959, r4960

Note: The identifier of an OA application comprises a maximum of 8 characters plus separator.

r4952 OA application GUID, total length / OA GUID length

B_INF, CU_G130_DP, CU_G130_PN, CU_G150_DP, CU_G150_PN, TM150, TM54F_MA, TM54F_SL, VECTOR_G

Can be changed: -	**Calculated:** -	**Access level:** 4
Data type: Unsigned16	**Dynamic index:** -	**Func. diagram:** -
P-Group: OEM range	**Units group:** -	**Unit selection:** -
Not for motor type: -	**Scaling:** -	**Expert list:** 1

Min	Max	Factory setting
0	180	-

Description: Displays the total length of the GUIDs of all the OA applications installed on the memory card/device memory.

Dependency: Refer to: r4950, r4951, r4955, p4956, r4957, r4958, r4959, r4960

Note: The GUID of an OA application comprises 16 characters plus 1 character major information plus 1 character, minor information.
GUID: Globally Unique IDentifier

r4952 OA application GUID, total length / OA GUID length

ENC, HUB, TB30, TM31

Can be changed: -	**Calculated:** -	**Access level:** 4
Data type: Unsigned16	**Dynamic index:** -	**Func. diagram:** -
P-Group: OEM range	**Units group:** -	**Unit selection:** -
Not for motor type: -	**Scaling:** -	**Expert list:** 0

Min	Max	Factory setting
0	180	-

Description: Displays the total length of the GUIDs of all the OA applications installed on the memory card/device memory.

Dependency: Refer to: r4950, r4951, r4955, p4956, r4957, r4958, r4959, r4960

Note: The GUID of an OA application comprises 16 characters plus 1 character major information plus 1 character, minor information.
GUID: Globally Unique IDentifier

© Siemens AG 2012 All Rights Reserved

r4955[0...n] OA application identifier / OA ID

B_INF, CU_G130_DP, CU_G130_PN, CU_G150_DP, CU_G150_PN, TM150, TM54F_MA, TM54F_SL, VECTOR_G

Can be changed: -	**Calculated:** -	**Access level:** 4
Data type: Unsigned8	**Dynamic index:** r4951	**Func. diagram:** -
P-Group: OEM range	**Units group:** -	**Unit selection:** -
Not for motor type: -	**Scaling:** -	**Expert list:** 1

Min	Max	Factory setting
-	-	-

Description: Displays the IDs of all the OA applications installed on the memory card/device memory.
r4955[0...8]: Identifier of OA application 1
r4955[9...17]: Identifier of OA applications 2, ...

Dependency: Refer to: r4950, r4951, r4952, p4956, r4957, r4958, r4959, r4960

Notice: If there is no OA application, then it is not possible to access an index.

r4955[0...n] OA application identifier / OA ID

ENC, HUB, TB30, TM31

Can be changed: -	**Calculated:** -	**Access level:** 4
Data type: Unsigned8	**Dynamic index:** r4951	**Func. diagram:** -
P-Group: OEM range	**Units group:** -	**Unit selection:** -
Not for motor type: -	**Scaling:** -	**Expert list:** 0

Min	Max	Factory setting
-	-	-

Description: Displays the IDs of all the OA applications installed on the memory card/device memory.
r4955[0...8]: Identifier of OA application 1
r4955[9...17]: Identifier of OA applications 2, ...

Dependency: Refer to: r4950, r4951, r4952, p4956, r4957, r4958, r4959, r4960

Notice: If there is no OA application, then it is not possible to access an index.

p4956[0...n] OA application activation / OA act

B_INF, CU_G130_DP, CU_G130_PN, CU_G150_DP, CU_G150_PN, TM150, TM54F_MA, TM54F_SL, VECTOR_G

Can be changed: C1, T	**Calculated:** -	**Access level:** 4
Data type: Integer16	**Dynamic index:** r4950	**Func. diagram:** -
P-Group: OEM range	**Units group:** -	**Unit selection:** -
Not for motor type: -	**Scaling:** -	**Expert list:** 1

Min	Max	Factory setting
0	1	0

Description: Setting to activate the OA applications installed on the memory card/device memory.
r4956[0]: Activates OA application 1
r4956[1]: Activates OA application 2, ...

Value:
0: OA application inactive
1: OA application active

Dependency: Refer to: r4950, r4951, r4952, r4955, r4957, r4958, r4959, r4960

Notice: If there is no OA application, then it is not possible to access an index.

© Siemens AG 2012 All Rights Reserved

p4956[0...n] OA application activation / OA act

ENC, HUB, TB30, TM31

Can be changed: C1, T	**Calculated:** -	**Access level:** 4
Data type: Integer16	**Dynamic index:** r4950	**Func. diagram:** -
P-Group: OEM range	**Units group:** -	**Unit selection:** -
Not for motor type: -	**Scaling:** -	**Expert list:** 0
Min	**Max**	**Factory setting**
0	1	0

Description: Setting to activate the OA applications installed on the memory card/device memory.
r4956[0]: Activates OA application 1
r4956[1]: Activates OA application 2, ...

Value:
0: OA application inactive
1: OA application active

Dependency: Refer to: r4950, r4951, r4952, r4955, r4957, r4958, r4959, r4960

Notice: If there is no OA application, then it is not possible to access an index.

r4957[0...n] OA application version / OA version

B_INF, CU_G130_DP, CU_G130_PN, CU_G150_DP, CU_G150_PN, TM150, TM54F_MA, TM54F_SL, VECTOR_G

Can be changed: -	**Calculated:** -	**Access level:** 4
Data type: Unsigned32	**Dynamic index:** r4950	**Func. diagram:** -
P-Group: OEM range	**Units group:** -	**Unit selection:** -
Not for motor type: -	**Scaling:** -	**Expert list:** 1
Min	**Max**	**Factory setting**
0	4294967295	-

Description: Displays the versions of the OA applications installed on the memory card/device memory.
r4957[0]: Version of OA application 1
r4957[1]: Version of OA application 2, ...

Dependency: Refer to: r4950, r4951, r4952, r4955, p4956, r4958, r4959, r4960

Notice: If there is no OA application, then it is not possible to access an index.

Note: Example:
The value 1010100 should be interpreted as V01.01.01.00.

r4957[0...n] OA application version / OA version

ENC, HUB, TB30, TM31

Can be changed: -	**Calculated:** -	**Access level:** 4
Data type: Unsigned32	**Dynamic index:** r4950	**Func. diagram:** -
P-Group: OEM range	**Units group:** -	**Unit selection:** -
Not for motor type: -	**Scaling:** -	**Expert list:** 0
Min	**Max**	**Factory setting**
0	4294967295	-

Description: Displays the versions of the OA applications installed on the memory card/device memory.
r4957[0]: Version of OA application 1
r4957[1]: Version of OA application 2, ...

Dependency: Refer to: r4950, r4951, r4952, r4955, p4956, r4958, r4959, r4960

Notice: If there is no OA application, then it is not possible to access an index.

Note: Example:
The value 1010100 should be interpreted as V01.01.01.00.

© Siemens AG 2012 All Rights Reserved

r4958[0...n] OA application interface version / OA int_version

B_INF, CU_G130_DP, CU_G130_PN, CU_G150_DP, CU_G150_PN, TM150, TM54F_MA, TM54F_SL, VECTOR_G

Can be changed: -	**Calculated:** -	**Access level:** 4
Data type: Unsigned32	**Dynamic index:** r4950	**Func. diagram:** -
P-Group: OEM range	**Units group:** -	**Unit selection:** -
Not for motor type: -	**Scaling:** -	**Expert list:** 1

Min	Max	Factory setting
-	-	-

Description: Displays the interface versions of the OA applications installed on the memory card/device memory.
r4958[0]: Interface version of OA application 1
r4958[1]: Interface version of OA applications 2, ...

Dependency: Refer to: r4950, r4951, r4952, r4955, p4956, r4957, r4959, r4960

Notice: If there is no OA application, then it is not possible to access an index.

Note: Example:
The value 1010100 should be interpreted as V01.01.01.00.

r4958[0...n] OA application interface version / OA int_version

ENC, HUB, TB30, TM31

Can be changed: -	**Calculated:** -	**Access level:** 4
Data type: Unsigned32	**Dynamic index:** r4950	**Func. diagram:** -
P-Group: OEM range	**Units group:** -	**Unit selection:** -
Not for motor type: -	**Scaling:** -	**Expert list:** 0

Min	Max	Factory setting
-	-	-

Description: Displays the interface versions of the OA applications installed on the memory card/device memory.
r4958[0]: Interface version of OA application 1
r4958[1]: Interface version of OA applications 2, ...

Dependency: Refer to: r4950, r4951, r4952, r4955, p4956, r4957, r4959, r4960

Notice: If there is no OA application, then it is not possible to access an index.

Note: Example:
The value 1010100 should be interpreted as V01.01.01.00.

r4959[0...n] OA application GUID / OA GUID

B_INF, CU_G130_DP, CU_G130_PN, CU_G150_DP, CU_G150_PN, TM150, TM54F_MA, TM54F_SL, VECTOR_G

Can be changed: -	**Calculated:** -	**Access level:** 4
Data type: Unsigned8	**Dynamic index:** r4952	**Func. diagram:** -
P-Group: OEM range	**Units group:** -	**Unit selection:** -
Not for motor type: -	**Scaling:** -	**Expert list:** 1

Min	Max	Factory setting
-	-	-

Description: Displays the GUIDs of the OA applications installed on the memory card/device memory.
r4959[0...15]: GUID of OA application 1
r4960[16]: Major information of OA application 1
r4960[17]: Minor information of OA application 1
r4959[18...33]: GUID of OA application 2
r4960[34]: Major information of OA application 2
r4960[35]: Minor information of OA application 2, ...

Dependency: Refer to: r4950, r4951, r4952, r4955, p4956, r4957, r4958, r4960

Notice: If there is no OA application, then it is not possible to access an index.

© Siemens AG 2012 All Rights Reserved

r4959[0...n] OA application GUID / OA GUID

ENC, HUB, TB30, TM31	**Can be changed:** -	**Calculated:** -	**Access level:** 4
	Data type: Unsigned8	**Dynamic index:** r4952	**Func. diagram:** -
	P-Group: OEM range	**Units group:** -	**Unit selection:** -
	Not for motor type: -	**Scaling:** -	**Expert list:** 0
	Min	**Max**	**Factory setting**
	-	-	-

Description: Displays the GUIDs of the OA applications installed on the memory card/device memory.
r4959[0...15]: GUID of OA application 1
r4960[16]: Major information of OA application 1
r4960[17]: Minor information of OA application 1
r4959[18...33]: GUID of OA application 2
r4960[34]: Major information of OA application 2
r4960[35]: Minor information of OA application 2, ...

Dependency: Refer to: r4950, r4951, r4952, r4955, p4956, r4957, r4958, r4960

Notice: If there is no OA application, then it is not possible to access an index.

r4960[0...n] OA application GUID drive object / OA GUID DO

B_INF, CU_G130_DP, CU_G130_PN, CU_G150_DP, CU_G150_PN, TM150, TM54F_MA, TM54F_SL, VECTOR_G	**Can be changed:** -	**Calculated:** -	**Access level:** 4
	Data type: Unsigned8	**Dynamic index:** r4952	**Func. diagram:** -
	P-Group: OEM range	**Units group:** -	**Unit selection:** -
	Not for motor type: -	**Scaling:** -	**Expert list:** 1
	Min	**Max**	**Factory setting**
	-	-	-

Description: Displays the GUIDs of the drive object of the OA applications installed on the memory card/device memory.
r4960[0...15]: GUID of this drive object of OA application 1
r4960[16]: Major information of this drive object of OA application 1
r4960[17]: Minor information of this drive object of OA application 1
r4960[18...33]: GUID of this drive object of OA application 2
r4960[34]: Major information of this drive object of OA application 2
r4960[35]: Minor information of this drive object of OA application 2, ...

Dependency: Refer to: r4950, r4951, r4952, r4955, p4956, r4957, r4958, r4959

Notice: If there is no OA application, then it is not possible to access an index.

r4960[0...n] OA application GUID drive object / OA GUID DO

ENC, HUB, TB30, TM31	**Can be changed:** -	**Calculated:** -	**Access level:** 4
	Data type: Unsigned8	**Dynamic index:** r4952	**Func. diagram:** -
	P-Group: OEM range	**Units group:** -	**Unit selection:** -
	Not for motor type: -	**Scaling:** -	**Expert list:** 0
	Min	**Max**	**Factory setting**
	-	-	-

Description: Displays the GUIDs of the drive object of the OA applications installed on the memory card/device memory.
r4960[0...15]: GUID of this drive object of OA application 1
r4960[16]: Major information of this drive object of OA application 1
r4960[17]: Minor information of this drive object of OA application 1
r4960[18...33]: GUID of this drive object of OA application 2
r4960[34]: Major information of this drive object of OA application 2
r4960[35]: Minor information of this drive object of OA application 2, ...

Dependency: Refer to: r4950, r4951, r4952, r4955, p4956, r4957, r4958, r4959

© Siemens AG 2012 All Rights Reserved

Notice: If there is no OA application, then it is not possible to access an index.

p4961[0...n] OA application logbook module selection / OA logbook module

B_INF, CU_G130_DP, CU_G130_PN, CU_G150_DP, CU_G150_PN, TM150, TM54F_MA, TM54F_SL, VECTOR_G

Can be changed: T	**Calculated:** -	**Access level:** 4
Data type: Unsigned32	**Dynamic index:** r4950	**Func. diagram:** -
P-Group: OEM range	**Units group:** -	**Unit selection:** -
Not for motor type: -	**Scaling:** -	**Expert list:** 1
Min	**Max**	**Factory setting**
0000 hex	FFFF FFFF hex	0000 hex

Description: Only for service purposes.

p4961[0...n] OA application logbook module selection / OA logbook module

ENC, HUB, TB30, TM31

Can be changed: T	**Calculated:** -	**Access level:** 4
Data type: Unsigned32	**Dynamic index:** r4950	**Func. diagram:** -
P-Group: OEM range	**Units group:** -	**Unit selection:** -
Not for motor type: -	**Scaling:** -	**Expert list:** 0
Min	**Max**	**Factory setting**
0000 hex	FFFF FFFF hex	0000 hex

Description: Only for service purposes.

r4975 OA application invalid number / OA inv no.

CU_G130_DP, CU_G130_PN, CU_G150_DP, CU_G150_PN

Can be changed: -	**Calculated:** -	**Access level:** 4
Data type: Unsigned16	**Dynamic index:** -	**Func. diagram:** -
P-Group: OEM range	**Units group:** -	**Unit selection:** -
Not for motor type: -	**Scaling:** -	**Expert list:** 1
Min	**Max**	**Factory setting**
-	-	-

Description: Displays the number of invalid OA applications installed on the memory card/device memory.

Dependency: Refer to: r4976, r4978, r4979

Note: OA: Open Architecture

r4976 OA application invalid identifier, total length / OA inv ID length

CU_G130_DP, CU_G130_PN, CU_G150_DP, CU_G150_PN

Can be changed: -	**Calculated:** -	**Access level:** 4
Data type: Unsigned16	**Dynamic index:** -	**Func. diagram:** -
P-Group: OEM range	**Units group:** -	**Unit selection:** -
Not for motor type: -	**Scaling:** -	**Expert list:** 1
Min	**Max**	**Factory setting**
-	-	-

Description: Displays the total length of the IDs of all the invalid OA applications installed on the memory card/device memory.

Dependency: Refer to: r4975, r4978, r4979

Note: The identifier of an invalid OA application comprises a maximum of 8 characters plus separator.

r4978[0...n] OA application invalid identifier / OA inv ID

CU_G130_DP, CU_G130_PN, CU_G150_DP, CU_G150_PN

Can be changed: -	**Calculated:** -	**Access level:** 4
Data type: Unsigned8	**Dynamic index:** r4976	**Func. diagram:** -
P-Group: OEM range	**Units group:** -	**Unit selection:** -
Not for motor type: -	**Scaling:** -	**Expert list:** 1
Min	**Max**	**Factory setting**
-	-	-

Description: Displays the IDs of all the invalid OA applications installed on the memory card/device memory.

© Siemens AG 2012 All Rights Reserved

r4978[0...8]: Identifier of invalid OA application 1
r4978[9...17]: Identifier of invalid OA application 2, ...

Dependency: Refer to: r4975, r4976, r4979

Notice: If there is no invalid OA application, then it is not possible to access an index.

r4979[0...n] OA application invalid error code / OA inv error code

CU_G130_DP, CU_G130_PN, CU_G150_DP, CU_G150_PN

Can be changed: -	**Calculated:** -	**Access level:** 4
Data type: Unsigned32	**Dynamic index:** r4975	**Func. diagram:** -
P-Group: OEM range	**Units group:** -	**Unit selection:** -
Not for motor type: -	**Scaling:** -	**Expert list:** 1
Min	**Max**	**Factory setting**
-	-	-

Description: Displays the error code of the invalid OA applications installed on the memory card/device memory.
r4979[0]: Fault value of OA application 1
r4979[1]: Fault value of OA application 2, ...

Dependency: Refer to: r4975, r4976, r4978

Notice: If there is no invalid OA application, then it is not possible to access an index.

Note: The value in the error code must be interpreted in binary form. The bits have the following meaning:
Bit 0: Incompatible OA interface version.
Bit 1: OA application could not be loaded.
Bit 2: Incorrect description files.
Bit 3: OA application does not define a CPU type.
Bit 4: OA application for this device not supported (incorrect CPU type).
Bit 5: OA application for this device not supported (incorrect type ID).
Bit 6: Incorrect description files (Const/Startup incompatible).

r5600 Pe energy saving mode ID / Pe mode ID

CU_G130_DP, CU_G130_PN, CU_G150_DP, CU_G150_PN

Can be changed: -	**Calculated:** -	**Access level:** 3
Data type: Integer16	**Dynamic index:** -	**Func. diagram:** -
P-Group: Communications	**Units group:** -	**Unit selection:** -
Not for motor type: -	**Scaling:** -	**Expert list:** 1
Min	**Max**	**Factory setting**
0	255	-

Description: Displays the PROFIenergy mode ID of the effective energy saving mode.

Value:
0: POWER OFF
2: En-saving mode 2
255: Ready

Note: Pe: PROFIenergy profiles

p5602[0...1] Pe energy-saving mode pause time minimal / Pe mod t_pause min

CU_G130_DP, CU_G130_PN, CU_G150_DP, CU_G150_PN

Can be changed: T	**Calculated:** -	**Access level:** 3
Data type: Unsigned32	**Dynamic index:** -	**Func. diagram:** -
P-Group: Communications	**Units group:** -	**Unit selection:** -
Not for motor type: -	**Scaling:** -	**Expert list:** 1
Min	**Max**	**Factory setting**
300000 [ms]	4294967295 [ms]	[0] 300000 [ms] [1] 480000 [ms]

Description: Sets the minimum possible pause time for the energy-saving mode.
The value is the sum of the following times:
- Energy-saving mode transition time
- Operating state transition time
- Energy-saving mode, dwell time minimal

© Siemens AG 2012 All Rights Reserved

Index: [0] = Reserved
[1] = Mode 2

Note: It is not permissible that the value is less than the sum of the "energy-saving mode transition time" and the "operating state transition time" (system properties).
Pe: PROFIenergy profiles

p5606[0...1] Pe energy-saving mode dwell time maximum / Pe t_dwell max

CU_G130_DP, CU_G130_PN, CU_G150_DP, CU_G150_PN

Can be changed: T	**Calculated:** -	**Access level:** 3
Data type: Unsigned32	**Dynamic index:** -	**Func. diagram:** -
P-Group: Communications	**Units group:** -	**Unit selection:** -
Not for motor type: -	**Scaling:** -	**Expert list:** 1
Min	**Max**	**Factory setting**
0 [ms]	4294967295 [ms]	4294967295 [ms]

Description: Sets the maximum dwell time for the energy-saving mode.

Index: [0] = Reserved
[1] = Mode 2

Note: Pe: PROFIenergy profiles

p5611 Pe energy-saving properties general / Pe properties gen

CU_G130_DP, CU_G130_PN, CU_G150_DP, CU_G150_PN

Can be changed: T	**Calculated:** -	**Access level:** 3
Data type: Unsigned32	**Dynamic index:** -	**Func. diagram:** -
P-Group: Communications	**Units group:** -	**Unit selection:** -
Not for motor type: -	**Scaling:** -	**Expert list:** 1
Min	**Max**	**Factory setting**
-	-	0000 bin

Description: Sets the general properties for energy-saving.

Bit field:

Bit	Signal name	1 signal	0 signal	FP
00	Inhibit PROFIenergy	Yes	No	-

Note: Pe: PROFIenergy profiles

p5612[0...1] Pe energy-saving properties mode-dependent / Pe properties mod

CU_G130_DP, CU_G130_PN, CU_G150_DP, CU_G150_PN

Can be changed: T	**Calculated:** -	**Access level:** 3
Data type: Unsigned32	**Dynamic index:** -	**Func. diagram:** -
P-Group: Communications	**Units group:** -	**Unit selection:** -
Not for motor type: -	**Scaling:** -	**Expert list:** 1
Min	**Max**	**Factory setting**
-	-	[0] 0110 bin [1] 0000 bin

Description: Sets the mode-dependent properties for energy-saving.

Index: [0] = Reserved
[1] = Mode 2

Bit field:

Bit	Signal name	1 signal	0 signal	FP
00	Reserved	Yes	No	-

Note: Pe: PROFIenergy profiles

r5613.0...1 CO/BO: Pe energy-saving active/inactive / Pe save act/inact

CU_G130_DP, CU_G130_PN, CU_G150_DP, CU_G150_PN

Can be changed: -	**Calculated:** -	**Access level:** 3
Data type: Unsigned8	**Dynamic index:** -	**Func. diagram:** -
P-Group: Communications	**Units group:** -	**Unit selection:** -
Not for motor type: -	**Scaling:** -	**Expert list:** 1
Min	**Max**	**Factory setting**
-	-	-

Description: Display and binector output for the state display PROFIenergy energy saving active or inactive.

© Siemens AG 2012 All Rights Reserved

Bit field:	Bit	Signal name	1 signal	0 signal	FP
	00	Pe active	Yes	No	-
	01	Pe inactive	Yes	No	-

Note: Bit 0 and bit 1 are inverse of one another.
Pe: PROFIenergy profiles

p6397 Motor module phase shift second system / MM ph_sh 2nd sys

VECTOR_G

Can be changed: T	**Calculated:** -	**Access level:** 3
Data type: Integer16	**Dynamic index:** -	**Func. diagram:** -
P-Group: Converter	**Units group:** -	**Unit selection:** -
Not for motor type: -	**Scaling:** -	**Expert list:** 1
Min	**Max**	**Factory setting**
0	2	0

Description: Sets the phase shift of the second system with respect to the first system for the motor module for a 12-pulse gating unit.

Value:
0: Shift by +30 °
1: Shift by -30 °
2: Shift by 0 °

Dependency: Refer to: p7003

Notice: The parameter is only evaluated if p7003 = 2.

Note: For p6397 = 0 the following applies: The second systems leads for a positive direction of rotation.
For p6397 = 1 the following applies: The second systems lags for a positive direction of rotation.

r7000 Par_circuit No. of active power units / Qty active PU

B_INF (Parallel), VECTOR_G (Parallel)

Can be changed: -	**Calculated:** -	**Access level:** 3
Data type: Unsigned16	**Dynamic index:** -	**Func. diagram:** -
P-Group: Modulation	**Units group:** -	**Unit selection:** -
Not for motor type: -	**Scaling:** -	**Expert list:** 1
Min	**Max**	**Factory setting**
-	-	-

Description: Displays the active power units for a parallel circuit configuration.

Dependency: Refer to: p7001

p7001[0...n] Par_circuit power units enable / PU enable

B_INF (Parallel), VECTOR_G (Parallel)

Can be changed: T	**Calculated:** -	**Access level:** 3
Data type: Integer16	**Dynamic index:** PDS, p0120	**Func. diagram:** -
P-Group: Modulation	**Units group:** -	**Unit selection:** -
Not for motor type: -	**Scaling:** -	**Expert list:** 1
Min	**Max**	**Factory setting**
0	1	1

Description: Enables the power units in the parallel circuit configuration.

Value:
0: De-activated
1: Activated

Dependency: Refer to: r7000

Note: For motors with separate winding systems (p7003 = 1) it is not possible to inhibit an individual power unit.
p7001 is automatically reset if a power unit is de-activated via p0125 or p0895.

© Siemens AG 2012 All Rights Reserved

r7002[0...n] Par_circuit status power units / Status PU

B_INF (Parallel), VECTOR_G (Parallel)

Can be changed: -	**Calculated:** -	**Access level:** 3
Data type: Integer16	**Dynamic index:** PDS, p0120	**Func. diagram:** -
P-Group: Modulation	**Units group:** -	**Unit selection:** -
Not for motor type: -	**Scaling:** -	**Expert list:** 1
Min	**Max**	**Factory setting**
0	1	-

Description: Displays the status of the power units in the parallel circuit configuration.

Value:
0: Pulses inhibited
1: Pulses enabled

Dependency: Refer to: r7000, p7001

p7003 Par_circuit winding system / Wind_sys

VECTOR_G (Parallel)

Can be changed: C2(2)	**Calculated:** -	**Access level:** 3
Data type: Integer16	**Dynamic index:** -	**Func. diagram:** -
P-Group: Converter	**Units group:** -	**Unit selection:** -
Not for motor type: -	**Scaling:** -	**Expert list:** 1
Min	**Max**	**Factory setting**
0	2	0

Description: Specifies the motor winding system when power units are connected in parallel.

Value:
0: One-winding system
1: Several separate winding systems or motors
2: Two separate offset winding systems

Dependency: Re p7003 = 2:

In order to permit separate, offset winding systems, wobbulation must first be deactivated (p1810.2 = 0). The magnitude and direction of the offset is parameterized in p6397.

When exiting commissioning, the circulating current control is automatically deactivated (p7035 = 0), and the compensation of the valve interlocking times is replaced by the appropriate stator resistance adaptation (p1780.7 = 1).

Refer to: p1802, p6397

Note: Re p7003 = 0:

- the motor data identification routine (p1910) determines the stator resistance and the cable resistance. The cable resistance of an individual Motor Module is entered into p0352.

- the current symmetrizing is activated as standard after the motor data identification routine (p7035 = 1).

- individual Motor Modules can be activated and de-activated (p7001).

Re p7003 = 1, 2:

- the motor data identification routine (p1910) determines the total (overall) resistance. The cable resistance is not measured, but instead, entered as a component of the total resistance (refer to p0352).

- all Motor Modules are activated. It is not possible to de-activate a motor model.

p7010 Par_circuit current dissymmetry alarm threshold / i_dissym A thresh

VECTOR_G (Parallel)

Can be changed: U, T	**Calculated:** -	**Access level:** 3
Data type: FloatingPoint32	**Dynamic index:** -	**Func. diagram:** -
P-Group: Modulation	**Units group:** -	**Unit selection:** -
Not for motor type: -	**Scaling:** PERCENT	**Expert list:** 1
Min	**Max**	**Factory setting**
2 [%]	100 [%]	20 [%]

Description: Sets the alarm threshold to detect current dissymmetry in the parallel circuit configuration.

The deviation between the measured values and average value is evaluated. The specified value is referred to the rated power unit current (p7251[0]).

Dependency: Refer to: r7251

Refer to: A05052

© Siemens AG 2012 All Rights Reserved

p7011 Par_circuit DC link voltage dissymmetry alarm threshold / Vdc_dissym A thrsh

B_INF (Parallel), VECTOR_G (Parallel)

Can be changed: U, T	**Calculated:** -	**Access level:** 3
Data type: FloatingPoint32	**Dynamic index:** -	**Func. diagram:** -
P-Group: Modulation	**Units group:** -	**Unit selection:** -
Not for motor type: -	**Scaling:** PERCENT	**Expert list:** 1
Min	**Max**	**Factory setting**
2 [%]	100 [%]	10 [%]

Description: Sets the alarm threshold to detect dissymmetry of the DC link voltages in the parallel circuit configuration.

The deviation between the measured values and average value is evaluated. The specified value is referred to the rated link voltage.

Dependency: Refer to: A05053

p7015 Par_circuit holding brake power unit data set / Brake PDS

VECTOR_G (Parallel)

Can be changed: T	**Calculated:** -	**Access level:** 3
Data type: Integer16	**Dynamic index:** -	**Func. diagram:** 2701, 2814
P-Group: Converter	**Units group:** -	**Unit selection:** -
Not for motor type: -	**Scaling:** -	**Expert list:** 1
Min	**Max**	**Factory setting**
0	99	99

Description: Sets the power unit data set for a parallel connection via which the holding brake is controlled.

Value:
0: Power unit data set 0
1: Power unit data set 1
2: Power unit data set 2
3: Power unit data set 3
4: Power unit data set 4
5: Power unit data set 5
6: Power unit data set 6
7: Power unit data set 7
99: No holding brake connected

Dependency: Refer to: p0120, p0121

Note: PDS: Power unit Data Set

Example:

3 power units are connected in parallel and the holding brake is connected to power unit 1.

p0120 = 3

p0121[0] = component number of power unit 0

p0121[1] = component number of power unit 1 (with holding brake)

p0121[2] = component number of power unit 2

--> p7015 = 1

r7020[0...n] CO: Par_circuit deviation current in phase U / Phase U curr dev

VECTOR_G (Parallel)

Can be changed: -	**Calculated:** -	**Access level:** 3
Data type: FloatingPoint32	**Dynamic index:** PDS, p0120	**Func. diagram:** -
P-Group: Displays, signals	**Units group:** 6_5	**Unit selection:** p0505
Not for motor type: -	**Scaling:** p2002	**Expert list:** 1
Min	**Max**	**Factory setting**
- [A]	- [A]	- [A]

Description: Displays the deviation between the measured current actual value of phase U and the average value as peak value.

The maximum deviation from the average value is displayed in r7025.

Dependency: Refer to: r7021, r7022, r7025

© Siemens AG 2012 All Rights Reserved

r7021[0...n] CO: Par_circuit deviation current in phase V / Phase V curr dev

VECTOR_G (Parallel)

Can be changed: -	**Calculated:** -	**Access level:** 3
Data type: FloatingPoint32	**Dynamic index:** PDS, p0120	**Func. diagram:** -
P-Group: Displays, signals	**Units group:** 6_5	**Unit selection:** p0505
Not for motor type: -	**Scaling:** p2002	**Expert list:** 1
Min	**Max**	**Factory setting**
- [A]	- [A]	- [A]

Description: Displays the deviation between the measured current actual value of phase V and the average value as peak value.
The maximum deviation from the average value is displayed in r7026.

Dependency: Refer to: r7020, r7022, r7026

r7022[0...n] CO: Par_circuit deviation current in phase W / Phase W curr dev

VECTOR_G (Parallel)

Can be changed: -	**Calculated:** -	**Access level:** 3
Data type: FloatingPoint32	**Dynamic index:** PDS, p0120	**Func. diagram:** -
P-Group: Displays, signals	**Units group:** 6_5	**Unit selection:** p0505
Not for motor type: -	**Scaling:** p2002	**Expert list:** 1
Min	**Max**	**Factory setting**
- [A]	- [A]	- [A]

Description: Displays the deviation between the measured current actual value of phase W and the average value as peak value.
The maximum deviation from the average value is displayed in r7027.

Dependency: Refer to: r7020, r7021, r7027

r7025 CO: Par_circuit max. deviation currents phase U / Phase U Max i_dev

VECTOR_G (Parallel)

Can be changed: -	**Calculated:** -	**Access level:** 3
Data type: FloatingPoint32	**Dynamic index:** -	**Func. diagram:** -
P-Group: Displays, signals	**Units group:** 6_5	**Unit selection:** p0505
Not for motor type: -	**Scaling:** p2002	**Expert list:** 1
Min	**Max**	**Factory setting**
- [A]	- [A]	- [A]

Description: Displays the maximum absolute deviation of the measured current actual values of phase U from the average value as peak value.
The deviation of the individual currents from the average value is displayed in r7020.

Dependency: Refer to: r7020, r7026, r7027
Refer to: A05052

r7026 CO: Par_circuit max. deviation currents phase V / Phase V Max i_dev

VECTOR_G (Parallel)

Can be changed: -	**Calculated:** -	**Access level:** 3
Data type: FloatingPoint32	**Dynamic index:** -	**Func. diagram:** -
P-Group: Displays, signals	**Units group:** 6_5	**Unit selection:** p0505
Not for motor type: -	**Scaling:** p2002	**Expert list:** 1
Min	**Max**	**Factory setting**
- [A]	- [A]	- [A]

Description: Displays the maximum absolute deviation of the measured current actual values of phase V from the average value as peak value.
The deviation of the individual currents from the average value is displayed in r7021.

Dependency: Refer to: r7021, r7025, r7027
Refer to: A05052

© Siemens AG 2012 All Rights Reserved

r7027 CO: Par_circuit max. deviation currents phase W / Phase W Max i_dev

VECTOR_G (Parallel)

Can be changed: -	**Calculated:** -	**Access level:** 3
Data type: FloatingPoint32	**Dynamic index:** -	**Func. diagram:** -
P-Group: Displays, signals	**Units group:** 6_5	**Unit selection:** p0505
Not for motor type: -	**Scaling:** p2002	**Expert list:** 1
Min	**Max**	**Factory setting**
- [A]	- [A]	- [A]

Description: Displays the maximum absolute deviation of the measured current actual values of phase W from the average value as peak value.
The deviation of the individual currents from the average value is displayed in r7022.

Dependency: Refer to: r7022, r7025, r7026
Refer to: A05052

r7030[0...n] CO: Par_circuit DC link voltage deviation / Vdc deviation

B_INF (Parallel), VECTOR_G (Parallel)

Can be changed: -	**Calculated:** -	**Access level:** 3
Data type: FloatingPoint32	**Dynamic index:** PDS, p0120	**Func. diagram:** -
P-Group: Displays, signals	**Units group:** -	**Unit selection:** -
Not for motor type: -	**Scaling:** p2001	**Expert list:** 1
Min	**Max**	**Factory setting**
- [V]	- [V]	- [V]

Description: Displays the deviation of the measured DC link voltage from the average value.
The maximum deviation from the average value is displayed in r7031.

Dependency: Refer to: r7031

r7031 CO: Par_circuit DC link voltage maximum deviation / Vdc deviation max.

B_INF (Parallel), VECTOR_G (Parallel)

Can be changed: -	**Calculated:** -	**Access level:** 3
Data type: FloatingPoint32	**Dynamic index:** -	**Func. diagram:** -
P-Group: Displays, signals	**Units group:** -	**Unit selection:** -
Not for motor type: -	**Scaling:** p2001	**Expert list:** 1
Min	**Max**	**Factory setting**
- [V]	- [V]	- [V]

Description: Displays the maximum absolute deviation of the measured DC link voltage from the average value.
The deviation of the individual voltages from the average value is displayed in r7030.

Dependency: Refer to: r7030
Refer to: A05053

p7035[0...n] Par_circuit circulating current control operating mode / Circ_I mode

VECTOR_G (Parallel)

Can be changed: U, T	**Calculated:** -	**Access level:** 3
Data type: Integer16	**Dynamic index:** DDS, p0180	**Func. diagram:** -
P-Group: Modulation	**Units group:** -	**Unit selection:** -
Not for motor type: -	**Scaling:** -	**Expert list:** 1
Min	**Max**	**Factory setting**
0	1	1

Description: Sets the operating mode of the circulating current control.
The circulating current control ensures symmetrical distribution of the total currents to the individual converters.

Value:
0: Circulating current control de-activated
1: Circulating current control activated

Dependency: Circulating current control is not possible for separate, offset motor winding systems (p7003 = 2).

© Siemens AG 2012 All Rights Reserved

p7036[0...n] Par_circuit circulating current control proportional gain / Circ_I Kp

VECTOR_G (Parallel)

Can be changed: U, T	**Calculated:** CALC_MOD_CON	**Access level:** 3
Data type: FloatingPoint32	**Dynamic index:** DDS, p0180	**Func. diagram:** -
P-Group: Modulation	**Units group:** -	**Unit selection:** -
Not for motor type: -	**Scaling:** -	**Expert list:** 1
Min	**Max**	**Factory setting**
0.00000 [ohm]	200.00000 [ohm]	0.00000 [ohm]

Description: Sets the proportional gain for the circulating current controller.
The parameter is pre-set to the cable resistance.

p7037[0...n] Par_circuit circulating current control integral time / I_circ Tn

VECTOR_G (Parallel)

Can be changed: U, T	**Calculated:** CALC_MOD_CON	**Access level:** 3
Data type: FloatingPoint32	**Dynamic index:** DDS, p0180	**Func. diagram:** -
P-Group: Modulation	**Units group:** -	**Unit selection:** -
Not for motor type: -	**Scaling:** -	**Expert list:** 1
Min	**Max**	**Factory setting**
2.0	1000.0	4.0

Description: Sets the integral time of the circulating current controller.
The parameter is referred to the current controller sampling time (p0115[0]).

Dependency: Refer to: p0115

p7038[0...n] Par_circuit circulating current control limit / I_circ limit

VECTOR_G (Parallel)

Can be changed: U, T	**Calculated:** CALC_MOD_ALL	**Access level:** 3
Data type: FloatingPoint32	**Dynamic index:** DDS, p0180	**Func. diagram:** -
P-Group: Modulation	**Units group:** -	**Unit selection:** -
Not for motor type: -	**Scaling:** -	**Expert list:** 1
Min	**Max**	**Factory setting**
1 [%]	100 [%]	50 [%]

Description: Sets the limit of the circulating current controller output values.
The parameter is, depending on the phase, referred to the valve lockout times (p1828, p1829, p1830).

p7040[0...n] Par_circuit correction valve lockout time phase U / Comp t_lockout U

VECTOR_G (Parallel)

Can be changed: U, T	**Calculated:** -	**Access level:** 4
Data type: FloatingPoint32	**Dynamic index:** PDS, p0120	**Func. diagram:** -
P-Group: Modulation	**Units group:** -	**Unit selection:** -
Not for motor type: -	**Scaling:** -	**Expert list:** 1
Min	**Max**	**Factory setting**
-1000000.00 [µs]	1000000.00 [µs]	0.00 [µs]

Description: For the particular Motor Module, the correction time must be added to the valve lockout time to be compensated for phase U (p1828).
The corrective value is used to compensate variations/spread in the valve lockout times of Motor Modules for a parallel circuit configuration.

Dependency: Refer to: p1828

© Siemens AG 2012 All Rights Reserved

p7042[0...n] Par_circuit correction valve lockout time phase V / Comp t_lockout V

VECTOR_G (Parallel)

Can be changed: U, T	**Calculated:** -	**Access level:** 4
Data type: FloatingPoint32	**Dynamic index:** PDS, p0120	**Func. diagram:** -
P-Group: Modulation	**Units group:** -	**Unit selection:** -
Not for motor type: -	**Scaling:** -	**Expert list:** 1
Min	**Max**	**Factory setting**
-1000000.00 [µs]	1000000.00 [µs]	0.00 [µs]

Description: For the particular Motor Module, the correction time must be added to the valve lockout time to be compensated for phase V (p1829).

The corrective value is used to compensate variations/spread in the valve lockout times of Motor Modules for a parallel circuit configuration.

Dependency: Refer to: p1829

p7044[0...n] Par_circuit correction valve lockout time phase W / Comp t_lockout W

VECTOR_G (Parallel)

Can be changed: U, T	**Calculated:** -	**Access level:** 4
Data type: FloatingPoint32	**Dynamic index:** PDS, p0120	**Func. diagram:** -
P-Group: Modulation	**Units group:** -	**Unit selection:** -
Not for motor type: -	**Scaling:** -	**Expert list:** 1
Min	**Max**	**Factory setting**
-1000000.00 [µs]	1000000.00 [µs]	0.00 [µs]

Description: For the particular Motor Module, the correction time must be added to the valve lockout time to be compensated for phase W (p1830).

The corrective value is used to compensate variations/spread in the valve lockout times of Motor Modules for a parallel circuit configuration.

Dependency: Refer to: p1830

r7050[0...n] Par_circuit circulating current phase U / Circ_I_phase U

VECTOR_G (Parallel)

Can be changed: -	**Calculated:** -	**Access level:** 3
Data type: FloatingPoint32	**Dynamic index:** PDS, p0120	**Func. diagram:** -
P-Group: Displays, signals	**Units group:** 6_5	**Unit selection:** p0505
Not for motor type: -	**Scaling:** p2002	**Expert list:** 1
Min	**Max**	**Factory setting**
- [A]	- [A]	- [A]

Description: Displays the circulating current of phase U as peak value.

r7051[0...n] Par_circuit circulating current phase V / Circ_I_phase V

VECTOR_G (Parallel)

Can be changed: -	**Calculated:** -	**Access level:** 3
Data type: FloatingPoint32	**Dynamic index:** PDS, p0120	**Func. diagram:** -
P-Group: Displays, signals	**Units group:** 6_5	**Unit selection:** p0505
Not for motor type: -	**Scaling:** p2002	**Expert list:** 1
Min	**Max**	**Factory setting**
- [A]	- [A]	- [A]

Description: Displays the circulating current of phase V as peak value.

r7052[0...n] Par_circuit circulating current phase W / Circ_I_phase W

VECTOR_G (Parallel)

Can be changed: -	**Calculated:** -	**Access level:** 3
Data type: FloatingPoint32	**Dynamic index:** PDS, p0120	**Func. diagram:** -
P-Group: Displays, signals	**Units group:** 6_5	**Unit selection:** p0505
Not for motor type: -	**Scaling:** p2002	**Expert list:** 1
Min	**Max**	**Factory setting**
- [A]	- [A]	- [A]

Description: Displays the circulating current of phase W as peak value.

© Siemens AG 2012 All Rights Reserved

r7100[0...99] Par_circuit ring buffer fault/alarm code / Fault/alarm code

B_INF (Parallel), VECTOR_G (Parallel)	**Can be changed:** -	**Calculated:** -	**Access level:** 3
	Data type: Unsigned32	**Dynamic index:** -	**Func. diagram:** -
	P-Group: Displays, signals	**Units group:** -	**Unit selection:** -
	Not for motor type: -	**Scaling:** -	**Expert list:** 1
	Min	**Max**	**Factory setting**
	-	-	-

Description: Ring buffer for faults and alarms that have occurred from power units connected in parallel (Motor Module, Active Line Infeed, Voltage Sensing Module).
Displays the fault/alarm code.

Dependency: Refer to: r7101, r7102, r7103

Note: The last fault case that occurred is documented in index 0.
The parameter is reset to 0 at POWER ON.

r7101[0...99] Par_circuit ring buffer data set number / Ring buffer Ds_No

B_INF (Parallel), VECTOR_G (Parallel)	**Can be changed:** -	**Calculated:** -	**Access level:** 3
	Data type: Unsigned32	**Dynamic index:** -	**Func. diagram:** -
	P-Group: Displays, signals	**Units group:** -	**Unit selection:** -
	Not for motor type: -	**Scaling:** -	**Expert list:** 1
	Min	**Max**	**Factory setting**
	-	-	-

Description: Ring buffer for faults and alarms that have occurred from power units connected in parallel (Motor Module, Active Line Infeed, Voltage Sensing Module).
p7101 < 100:
Displays the Power unit Data Set number (PDS).
p7101 >= 100:
Displays the Voltage Sensing Module Data Set number (VSMDS)

Dependency: Refer to: r7100, r7102, r7103

Note: The last fault case that occurred is documented in index 0.
The parameter is reset to 0 at POWER ON.

r7102[0...99] Par_circuit ring buffer fault/alarm received / F/A received

B_INF (Parallel), VECTOR_G (Parallel)	**Can be changed:** -	**Calculated:** -	**Access level:** 3
	Data type: Unsigned32	**Dynamic index:** -	**Func. diagram:** -
	P-Group: Displays, signals	**Units group:** -	**Unit selection:** -
	Not for motor type: -	**Scaling:** -	**Expert list:** 1
	Min	**Max**	**Factory setting**
	-	-	-

Description: Ring buffer for faults and alarms that have occurred from power units connected in parallel (Motor Module, Active Line Infeed, Voltage Sensing Module).
Displays the relative system runtime when the fault or alarm occurred.

Dependency: Refer to: r7100, r7101, r7103

Note: The last fault case that occurred is documented in index 0.
The parameter is reset to 0 at POWER ON.

© Siemens AG 2012 All Rights Reserved

r7103[0...99] Par_circuit ring buffer fault/alarm gone / F/A gone

B_INF (Parallel), VECTOR_G (Parallel)

Can be changed: -	**Calculated:** -	**Access level:** 3
Data type: Unsigned32	**Dynamic index:** -	**Func. diagram:** -
P-Group: Displays, signals	**Units group:** -	**Unit selection:** -
Not for motor type: -	**Scaling:** -	**Expert list:** 1
Min	**Max**	**Factory setting**
-	-	-

Description: Ring buffer for faults and alarms that have occurred from power units connected in parallel (Motor Module, Active Line Infeed, Voltage Sensing Module).
Displays the relative system runtime when the fault or alarm was withdrawn.

Dependency: Refer to: r7100, r7101, r7102

Note: The last fault case that occurred is documented in index 0.
The parameter is reset to 0 at POWER ON.

r7200[0...n] Par_circuit power unit overload I2t / PU overload I2t

VECTOR_G (Parallel)

Can be changed: -	**Calculated:** -	**Access level:** 3
Data type: FloatingPoint32	**Dynamic index:** PDS, p0120	**Func. diagram:** -
P-Group: Displays, signals	**Units group:** -	**Unit selection:** -
Not for motor type: -	**Scaling:** PERCENT	**Expert list:** 1
Min	**Max**	**Factory setting**
- [%]	- [%]	- [%]

Description: Displays the overload of the particular power unit in a parallel circuit configuration calculated using the I2t function.
The maximum value of all power units is displayed in r0036.

r7201[0...n] CO: Par_circuit power unit temperatures max. inverter / PU temp max inv

B_INF (Parallel), VECTOR_G (Parallel)

Can be changed: -	**Calculated:** -	**Access level:** 3
Data type: FloatingPoint32	**Dynamic index:** PDS, p0120	**Func. diagram:** -
P-Group: Displays, signals	**Units group:** 21_1	**Unit selection:** p0505
Not for motor type: -	**Scaling:** p2006	**Expert list:** 1
Min	**Max**	**Factory setting**
- [°C]	- [°C]	- [°C]

Description: Displays the maximum inverter temperature in the power unit for a parallel circuit configuration.
The maximum value of all power units is displayed in r0037[0].

r7202[0...n] Par_circuit power unit temperatures max. depletion layer / PU TempMaxDepLayer

B_INF (Parallel), VECTOR_G (Parallel)

Can be changed: -	**Calculated:** -	**Access level:** 3
Data type: FloatingPoint32	**Dynamic index:** PDS, p0120	**Func. diagram:** -
P-Group: Displays, signals	**Units group:** 21_1	**Unit selection:** p0505
Not for motor type: -	**Scaling:** p2006	**Expert list:** 1
Min	**Max**	**Factory setting**
- [°C]	- [°C]	- [°C]

Description: Displays the maximum depletion layer temperature in the power unit for a parallel circuit configuration.
The maximum value of all power units is displayed in r0037[1].

© Siemens AG 2012 All Rights Reserved

r7203[0...n] Par_circuit power unit temperatures max. rectifier / PU temp max rect

B_INF (Parallel), VECTOR_G (Parallel)

Can be changed: -	**Calculated:** -	**Access level:** 3
Data type: FloatingPoint32	**Dynamic index:** PDS, p0120	**Func. diagram:** -
P-Group: Displays, signals	**Units group:** 21_1	**Unit selection:** p0505
Not for motor type: -	**Scaling:** p2006	**Expert list:** 1
Min	**Max**	**Factory setting**
- [°C]	- [°C]	- [°C]

Description: Displays the maximum rectifier temperature in the power unit for a parallel circuit configuration.
The maximum value of all power units is displayed in r0037[2].

r7204[0...n] Par_circuit power unit temperatures air intake / PU temp air intake

B_INF (Parallel), VECTOR_G (Parallel)

Can be changed: -	**Calculated:** -	**Access level:** 3
Data type: FloatingPoint32	**Dynamic index:** PDS, p0120	**Func. diagram:** -
P-Group: Displays, signals	**Units group:** 21_1	**Unit selection:** p0505
Not for motor type: -	**Scaling:** p2006	**Expert list:** 1
Min	**Max**	**Factory setting**
- [°C]	- [°C]	- [°C]

Description: Displays the air intake temperature in the power unit for a parallel circuit configuration.
The maximum value of all power units is displayed in r0037[3].

r7205[0...n] Par_circuit power unit temperatures electronics / PU temp electr

B_INF (Parallel), VECTOR_G (Parallel)

Can be changed: -	**Calculated:** -	**Access level:** 3
Data type: FloatingPoint32	**Dynamic index:** PDS, p0120	**Func. diagram:** -
P-Group: Displays, signals	**Units group:** 21_1	**Unit selection:** p0505
Not for motor type: -	**Scaling:** p2006	**Expert list:** 1
Min	**Max**	**Factory setting**
- [°C]	- [°C]	- [°C]

Description: Displays the temperature of the electronics module in the power unit for a parallel circuit configuration.
The maximum value of all power units is displayed in r0037[4].

r7206[0...n] Par_circuit power unit temperatures inverter 1 / PU temp inv 1

B_INF (Parallel), VECTOR_G (Parallel)

Can be changed: -	**Calculated:** -	**Access level:** 3
Data type: FloatingPoint32	**Dynamic index:** PDS, p0120	**Func. diagram:** -
P-Group: Displays, signals	**Units group:** 21_1	**Unit selection:** p0505
Not for motor type: -	**Scaling:** p2006	**Expert list:** 1
Min	**Max**	**Factory setting**
- [°C]	- [°C]	- [°C]

Description: Displays the inverter temperature 1 in the power unit for a parallel circuit configuration.
The maximum value of all power units is displayed in r0037[5].

r7207[0...n] Par_circuit power unit temperatures inverter 2 / PU temp inv 2

B_INF (Parallel), VECTOR_G (Parallel)

Can be changed: -	**Calculated:** -	**Access level:** 3
Data type: FloatingPoint32	**Dynamic index:** PDS, p0120	**Func. diagram:** -
P-Group: Displays, signals	**Units group:** 21_1	**Unit selection:** p0505
Not for motor type: -	**Scaling:** p2006	**Expert list:** 1
Min	**Max**	**Factory setting**
- [°C]	- [°C]	- [°C]

Description: Displays the inverter temperature 2 in the power unit for a parallel circuit configuration.
The maximum value of all power units is displayed in r0037[6].

© Siemens AG 2012 All Rights Reserved

r7208[0...n] Par_circuit power unit temperatures inverter 3 / PU temp inv 3

B_INF (Parallel), VECTOR_G (Parallel)

Can be changed: -	**Calculated:** -	**Access level:** 3
Data type: FloatingPoint32	**Dynamic index:** PDS, p0120	**Func. diagram:** -
P-Group: Displays, signals	**Units group:** 21_1	**Unit selection:** p0505
Not for motor type: -	**Scaling:** p2006	**Expert list:** 1
Min	**Max**	**Factory setting**
- [°C]	- [°C]	- [°C]

Description: Displays the inverter temperature 3 in the power unit for a parallel circuit configuration.
The maximum value of all power units is displayed in r0037[7].

r7209[0...n] Par_circuit power unit temperatures inverter 4 / PU temp inv 4

B_INF (Parallel), VECTOR_G (Parallel)

Can be changed: -	**Calculated:** -	**Access level:** 3
Data type: FloatingPoint32	**Dynamic index:** PDS, p0120	**Func. diagram:** -
P-Group: Displays, signals	**Units group:** 21_1	**Unit selection:** p0505
Not for motor type: -	**Scaling:** p2006	**Expert list:** 1
Min	**Max**	**Factory setting**
- [°C]	- [°C]	- [°C]

Description: Displays the inverter temperature 4 in the power unit for a parallel circuit configuration.
The maximum value of all power units is displayed in r0037[8].

r7210[0...n] Par_circuit power unit temperatures inverter 5 / PU temp inv 5

B_INF (Parallel), VECTOR_G (Parallel)

Can be changed: -	**Calculated:** -	**Access level:** 3
Data type: FloatingPoint32	**Dynamic index:** PDS, p0120	**Func. diagram:** -
P-Group: Displays, signals	**Units group:** 21_1	**Unit selection:** p0505
Not for motor type: -	**Scaling:** p2006	**Expert list:** 1
Min	**Max**	**Factory setting**
- [°C]	- [°C]	- [°C]

Description: Displays the inverter temperature 5 in the power unit for a parallel circuit configuration.
The maximum value of all power units is displayed in r0037[9].

r7211[0...n] Par_circuit power unit temperatures inverter 6 / PU temp inv 6

B_INF (Parallel), VECTOR_G (Parallel)

Can be changed: -	**Calculated:** -	**Access level:** 3
Data type: FloatingPoint32	**Dynamic index:** PDS, p0120	**Func. diagram:** -
P-Group: Displays, signals	**Units group:** 21_1	**Unit selection:** p0505
Not for motor type: -	**Scaling:** p2006	**Expert list:** 1
Min	**Max**	**Factory setting**
- [°C]	- [°C]	- [°C]

Description: Displays the inverter temperature 6 in the power unit for a parallel circuit configuration.
The maximum value of all power units is displayed in r0037[10].

r7212[0...n] Par_circuit power unit temperatures inverter 1 / PU temp rect 1

B_INF (Parallel), VECTOR_G (Parallel)

Can be changed: -	**Calculated:** -	**Access level:** 3
Data type: FloatingPoint32	**Dynamic index:** PDS, p0120	**Func. diagram:** -
P-Group: Displays, signals	**Units group:** 21_1	**Unit selection:** p0505
Not for motor type: -	**Scaling:** p2006	**Expert list:** 1
Min	**Max**	**Factory setting**
- [°C]	- [°C]	- [°C]

Description: Displays rectifier temperature 1 in the power unit for a parallel circuit configuration.
The maximum value of all power units is displayed in r0037[11].

© Siemens AG 2012 All Rights Reserved

r7213[0...n] Par_circuit power unit temperatures inverter 2 / PU temp rect 2

B_INF (Parallel), VECTOR_G (Parallel)

Can be changed: -	**Calculated:** -	**Access level:** 3
Data type: FloatingPoint32	**Dynamic index:** PDS, p0120	**Func. diagram:** -
P-Group: Displays, signals	**Units group:** 21_1	**Unit selection:** p0505
Not for motor type: -	**Scaling:** p2006	**Expert list:** 1
Min	**Max**	**Factory setting**
- [°C]	- [°C]	- [°C]

Description: Displays rectifier temperature 2 in the power unit for a parallel circuit configuration.
The maximum value of all power units is displayed in r0037[12].

r7214[0...n] Par_circuit power unit temperatures depletion layer 1 / PU temp DepLayer 1

B_INF (Parallel), VECTOR_G (Parallel)

Can be changed: -	**Calculated:** -	**Access level:** 3
Data type: FloatingPoint32	**Dynamic index:** PDS, p0120	**Func. diagram:** -
P-Group: Displays, signals	**Units group:** 21_1	**Unit selection:** p0505
Not for motor type: -	**Scaling:** p2006	**Expert list:** 1
Min	**Max**	**Factory setting**
- [°C]	- [°C]	- [°C]

Description: Displays depletion layer temperature 1 in the power unit for a parallel circuit configuration.
The maximum value of all power units is displayed in r0037[13].

r7215[0...n] Par_circuit power unit temperatures depletion layer 2 / PU temp DepLayer 2

B_INF (Parallel), VECTOR_G (Parallel)

Can be changed: -	**Calculated:** -	**Access level:** 3
Data type: FloatingPoint32	**Dynamic index:** PDS, p0120	**Func. diagram:** -
P-Group: Displays, signals	**Units group:** 21_1	**Unit selection:** p0505
Not for motor type: -	**Scaling:** p2006	**Expert list:** 1
Min	**Max**	**Factory setting**
- [°C]	- [°C]	- [°C]

Description: Displays depletion layer temperature 2 in the power unit for a parallel circuit configuration.
The maximum value of all power units is displayed in r0037[14].

r7216[0...n] Par_circuit power unit temperatures depletion layer 3 / PU temp DepLayer 3

B_INF (Parallel), VECTOR_G (Parallel)

Can be changed: -	**Calculated:** -	**Access level:** 3
Data type: FloatingPoint32	**Dynamic index:** PDS, p0120	**Func. diagram:** -
P-Group: Displays, signals	**Units group:** 21_1	**Unit selection:** p0505
Not for motor type: -	**Scaling:** p2006	**Expert list:** 1
Min	**Max**	**Factory setting**
- [°C]	- [°C]	- [°C]

Description: Displays depletion layer temperature 3 in the power unit for a parallel circuit configuration.
The maximum value of all power units is displayed in r0037[15].

r7217[0...n] Par_circuit power unit temperatures depletion layer 4 / PU temp DepLayer 4

B_INF (Parallel), VECTOR_G (Parallel)

Can be changed: -	**Calculated:** -	**Access level:** 3
Data type: FloatingPoint32	**Dynamic index:** PDS, p0120	**Func. diagram:** -
P-Group: Displays, signals	**Units group:** 21_1	**Unit selection:** p0505
Not for motor type: -	**Scaling:** p2006	**Expert list:** 1
Min	**Max**	**Factory setting**
- [°C]	- [°C]	- [°C]

Description: Displays depletion layer temperature 4 in the power unit for a parallel circuit configuration.
The maximum value of all power units is displayed in r0037[16].

© Siemens AG 2012 All Rights Reserved

r7218[0...n] Par_circuit power unit temperatures depletion layer 5 / PU temp DepLayer 5

B_INF (Parallel), VECTOR_G (Parallel)

Can be changed: -	**Calculated:** -	**Access level:** 3
Data type: FloatingPoint32	**Dynamic index:** PDS, p0120	**Func. diagram:** -
P-Group: Displays, signals	**Units group:** 21_1	**Unit selection:** p0505
Not for motor type: -	**Scaling:** p2006	**Expert list:** 1
Min	**Max**	**Factory setting**
- [°C]	- [°C]	- [°C]

Description: Displays depletion layer temperature 5 in the power unit for a parallel circuit configuration.
The maximum value of all power units is displayed in r0037[17].

r7219[0...n] Par_circuit power unit temperatures depletion layer 6 / PU temp DepLayer 6

B_INF (Parallel), VECTOR_G (Parallel)

Can be changed: -	**Calculated:** -	**Access level:** 3
Data type: FloatingPoint32	**Dynamic index:** PDS, p0120	**Func. diagram:** -
P-Group: Displays, signals	**Units group:** 21_1	**Unit selection:** p0505
Not for motor type: -	**Scaling:** p2006	**Expert list:** 1
Min	**Max**	**Factory setting**
- [°C]	- [°C]	- [°C]

Description: Displays depletion layer temperature 6 in the power unit for a parallel circuit configuration.
The maximum value of all power units is displayed in r0037[18].

r7220[0...n] CO: Par_circuit drive output current maximum / Drv I_outp max

VECTOR_G (Parallel)

Can be changed: -	**Calculated:** -	**Access level:** 3
Data type: FloatingPoint32	**Dynamic index:** PDS, p0120	**Func. diagram:** -
P-Group: Displays, signals	**Units group:** -	**Unit selection:** -
Not for motor type: -	**Scaling:** p2002	**Expert list:** 1
Min	**Max**	**Factory setting**
- [Arms]	- [Arms]	- [Arms]

Description: Displays the maximum output current of the power unit.
The minimum value of all power units multiplied by the number of Motor Modules is displayed in r0067.

r7222[0...n] CO: Par_circuit absolute current actual value / I_act abs val

VECTOR_G (Parallel)

Can be changed: -	**Calculated:** -	**Access level:** 3
Data type: FloatingPoint32	**Dynamic index:** PDS, p0120	**Func. diagram:** -
P-Group: Displays, signals	**Units group:** 6_2	**Unit selection:** p0505
Not for motor type: -	**Scaling:** p2002	**Expert list:** 1
Min	**Max**	**Factory setting**
- [Arms]	- [Arms]	- [Arms]

Description: Displays actual absolute current.
The summed value of all power units is displayed in r0068.

r7223[0...n] CO: Par_circuit phase current actual value phase U / I_phase U act val

VECTOR_G (Parallel)

Can be changed: -	**Calculated:** -	**Access level:** 3
Data type: FloatingPoint32	**Dynamic index:** PDS, p0120	**Func. diagram:** -
P-Group: Displays, signals	**Units group:** 6_5	**Unit selection:** p0505
Not for motor type: -	**Scaling:** p2002	**Expert list:** 1
Min	**Max**	**Factory setting**
- [A]	- [A]	- [A]

Description: Displays the measured actual value of phase U as peak value.
The summed value of all power units is displayed in r0069[0].

© Siemens AG 2012 All Rights Reserved

r7224[0...n] CO: Par_circuit phase current actual value phase V / I_phase V act val

VECTOR_G (Parallel)

Can be changed: -	**Calculated:** -	**Access level:** 3
Data type: FloatingPoint32	**Dynamic index:** PDS, p0120	**Func. diagram:** -
P-Group: Displays, signals	**Units group:** 6_5	**Unit selection:** p0505
Not for motor type: -	**Scaling:** p2002	**Expert list:** 1
Min	**Max**	**Factory setting**
- [A]	- [A]	- [A]

Description: Displays the measured actual value of phase V as peak value.
The summed value of all power units is displayed in r0069[1].

r7225[0...n] CO: Par_circuit phase current actual value phase W / I_phase W act val

VECTOR_G (Parallel)

Can be changed: -	**Calculated:** -	**Access level:** 3
Data type: FloatingPoint32	**Dynamic index:** PDS, p0120	**Func. diagram:** -
P-Group: Displays, signals	**Units group:** 6_5	**Unit selection:** p0505
Not for motor type: -	**Scaling:** p2002	**Expert list:** 1
Min	**Max**	**Factory setting**
- [A]	- [A]	- [A]

Description: Displays the measured actual value of phase W as peak value.
The summed value of all power units is displayed in r0069[2].

r7226[0...n] CO: Par_circuit phase current actual value phase U offset / I_phase U offset

VECTOR_G (Parallel)

Can be changed: -	**Calculated:** -	**Access level:** 3
Data type: FloatingPoint32	**Dynamic index:** PDS, p0120	**Func. diagram:** -
P-Group: Displays, signals	**Units group:** 6_5	**Unit selection:** p0505
Not for motor type: -	**Scaling:** p2002	**Expert list:** 1
Min	**Max**	**Factory setting**
- [A]	- [A]	- [A]

Description: Displays the measured offset of phase U as peak value.
The summed value of all power units is displayed in r0069[3].

r7227[0...n] CO: Par_circuit phase current actual value phase V offset / I_phase V offset

VECTOR_G (Parallel)

Can be changed: -	**Calculated:** -	**Access level:** 3
Data type: FloatingPoint32	**Dynamic index:** PDS, p0120	**Func. diagram:** -
P-Group: Displays, signals	**Units group:** 6_5	**Unit selection:** p0505
Not for motor type: -	**Scaling:** p2002	**Expert list:** 1
Min	**Max**	**Factory setting**
- [A]	- [A]	- [A]

Description: Displays the measured offset of phase V as peak value.
The summed value of all power units is displayed in r0069[4].

r7228[0...n] CO: Par_circuit phase current actual value phase W offset / I_phase W offset

VECTOR_G (Parallel)

Can be changed: -	**Calculated:** -	**Access level:** 3
Data type: FloatingPoint32	**Dynamic index:** PDS, p0120	**Func. diagram:** -
P-Group: Displays, signals	**Units group:** 6_5	**Unit selection:** p0505
Not for motor type: -	**Scaling:** p2002	**Expert list:** 1
Min	**Max**	**Factory setting**
- [A]	- [A]	- [A]

Description: Displays the measured offset of phase W as peak value.
The summed value of all power units is displayed in r0069[5].

© Siemens AG 2012 All Rights Reserved

r7229[0...n] CO: Par_circuit phase current actual value sum U, V, W / I_phase sum UVW

VECTOR_G (Parallel)

Can be changed: -	**Calculated:** -	**Access level:** 3
Data type: FloatingPoint32	**Dynamic index:** PDS, p0120	**Func. diagram:** -
P-Group: Displays, signals	**Units group:** 6_5	**Unit selection:** p0505
Not for motor type: -	**Scaling:** p2002	**Expert list:** 1
Min	**Max**	**Factory setting**
- [A]	- [A]	- [A]

Description: Displays the measured sum of the currents in phases U, V and W as peak value.
The summed value of all power units is displayed in r0069[6].

r7230[0...n] CO: Par_circuit DC link voltage actual value / Vdc_act

B_INF (Parallel), VECTOR_G (Parallel)

Can be changed: -	**Calculated:** -	**Access level:** 3
Data type: FloatingPoint32	**Dynamic index:** PDS, p0120	**Func. diagram:** -
P-Group: Displays, signals	**Units group:** 5_2	**Unit selection:** p0505
Not for motor type: -	**Scaling:** p2001	**Expert list:** 1
Min	**Max**	**Factory setting**
- [V]	- [V]	- [V]

Description: Displays the measured actual value of the DC link voltage.
The average value of all power units is displayed in r0070.

r7231[0...n] CO: Par_circuit phase voltage actual value phase U / U_phase U act val

VECTOR_G (Parallel)

Can be changed: -	**Calculated:** -	**Access level:** 3
Data type: FloatingPoint32	**Dynamic index:** PDS, p0120	**Func. diagram:** -
P-Group: Displays, signals	**Units group:** 5_3	**Unit selection:** p0505
Not for motor type: -	**Scaling:** p2001	**Expert list:** 1
Min	**Max**	**Factory setting**
- [V]	- [V]	- [V]

Description: Displays the actual voltage, phase U.
The average value of all power units is displayed in r0089[0].

r7232[0...n] CO: Par_circuit phase voltage actual value phase V / U_phase V act val

VECTOR_G (Parallel)

Can be changed: -	**Calculated:** -	**Access level:** 3
Data type: FloatingPoint32	**Dynamic index:** PDS, p0120	**Func. diagram:** -
P-Group: Displays, signals	**Units group:** 5_3	**Unit selection:** p0505
Not for motor type: -	**Scaling:** p2001	**Expert list:** 1
Min	**Max**	**Factory setting**
- [V]	- [V]	- [V]

Description: Displays the actual voltage, phase V.
The average value of all power units is displayed in r0089[1].

r7233[0...n] CO: Par_circuit phase voltage actual value phase W / U_phase W act val

VECTOR_G (Parallel)

Can be changed: -	**Calculated:** -	**Access level:** 3
Data type: FloatingPoint32	**Dynamic index:** PDS, p0120	**Func. diagram:** -
P-Group: Displays, signals	**Units group:** 5_3	**Unit selection:** p0505
Not for motor type: -	**Scaling:** p2001	**Expert list:** 1
Min	**Max**	**Factory setting**
- [V]	- [V]	- [V]

Description: Displays the actual voltage, phase W.
The average value of all power units is displayed in r0089[2].

© Siemens AG 2012 All Rights Reserved

r7240[0...n] Par_circuit gating unit status word 1 / Gating unit ZSW1

VECTOR_G (Parallel)

Can be changed: -	**Calculated:** -	**Access level:** 4
Data type: Unsigned16	**Dynamic index:** PDS, p0120	**Func. diagram:** -
P-Group: Displays, signals	**Units group:** -	**Unit selection:** -
Not for motor type: -	**Scaling:** -	**Expert list:** 1
Min	**Max**	**Factory setting**
-	-	-

Description: Displays status word 1 of the power unit.

Bit field:

Bit	Signal name	1 signal	0 signal	FP
00	Fault time-critical	ON	OFF	-
01	Gating unit mode bit 0	ON	OFF	-
02	Pulse enable	ON	OFF	-
03	5 V upper circuit breaker	ON	OFF	-
04	5 V lower circuit breaker	ON	OFF	-
05	Gating unit mode bit 1	ON	OFF	-
06	Gating unit mode bit 2	ON	OFF	-
07	Brake state	ON	OFF	-
08	Brake diagnostics	ON	OFF	-
09	Armature short-circuit braking	Active	Not active	-
10	Gating unit state bit 0	ON	OFF	-
11	Gating unit state bit 1	ON	OFF	-
12	Gating unit state bit 2	ON	OFF	-
13	Alarm status bit 0	ON	OFF	-
14	Alarm status bit 1	ON	OFF	-
15	Diagnostics 24 V	ON	OFF	-

r7250[0...4] Par_circuit power unit rated power / PU P_rated

B_INF (Parallel), VECTOR_G (Parallel)

Can be changed: -	**Calculated:** -	**Access level:** 2
Data type: FloatingPoint32	**Dynamic index:** -	**Func. diagram:** -
P-Group: Converter	**Units group:** 14_6	**Unit selection:** p0100
Not for motor type: -	**Scaling:** -	**Expert list:** 1
Min	**Max**	**Factory setting**
- [kW]	- [kW]	- [kW]

Description: Displays the rated power of the individual power units connected in parallel for various load duty cycles.
The sum of the rated powers of all power units connected in parallel is displayed in r0206.

Index:
[0] = Rated value
[1] = Load duty cycle with low overload
[2] = Load duty cycle with high overload
[3] = S1 cont duty cyc
[4] = S6 load duty cycle

Dependency: The value is displayed in [kW] or [hp].
Refer to: p0100, p0205

r7251[0...4] Par_circuit power unit rated current / PU PI_rated

B_INF (Parallel), VECTOR_G (Parallel)

Can be changed: -	**Calculated:** -	**Access level:** 2
Data type: FloatingPoint32	**Dynamic index:** -	**Func. diagram:** -
P-Group: Converter	**Units group:** -	**Unit selection:** -
Not for motor type: -	**Scaling:** -	**Expert list:** 1
Min	**Max**	**Factory setting**
- [Arms]	- [Arms]	- [Arms]

Description: Displays the rated current of the individual power units connected in parallel for various load duty cycles.
The sum of the rated currents of all power units connected in parallel is displayed in r0207.

Index:
[0] = Rated value
[1] = Load duty cycle with low overload
[2] = Load duty cycle with high overload

© Siemens AG 2012 All Rights Reserved

[3] = S1 cont duty cyc
[4] = S6 load duty cycle

Dependency: Refer to: p0205

r7252[0...4] Par_circuit maximum power unit current / PU I_max

B_INF (Parallel), VECTOR_G (Parallel)

Can be changed: -	**Calculated:** -	**Access level:** 2
Data type: FloatingPoint32	**Dynamic index:** -	**Func. diagram:** -
P-Group: Converter	**Units group:** -	**Unit selection:** -
Not for motor type: -	**Scaling:** -	**Expert list:** 1
Min	**Max**	**Factory setting**
- [Arms]	- [Arms]	- [Arms]

Description: Displays the maximum output current of the individual power units connected in parallel.
The sum of the maximum currents of all power units connected in parallel is displayed in r0209.

Index: [0] = Rated value
[1] = Load duty cycle with low overload
[2] = Load duty cycle with high overload
[3] = S1 cont duty cyc
[4] = S6 load duty cycle

Dependency: Refer to: p0205

r7758[0...19] KHP Control Unit serial number / KHP CU ser_no

CU_G130_DP, CU_G130_PN, CU_G150_DP, CU_G150_PN

Can be changed: -	**Calculated:** -	**Access level:** 3
Data type: Unsigned8	**Dynamic index:** -	**Func. diagram:** -
P-Group: -	**Units group:** -	**Unit selection:** -
Not for motor type: -	**Scaling:** -	**Expert list:** 1
Min	**Max**	**Factory setting**
-	-	-

Description: Displays the actual serial number of the Control Unit.
The individual characters of the serial number are displayed in the ASCII code in the indices.
For the commissioning software, the ASCII characters are displayed uncoded.

Dependency: Refer to: p7765, p7766, p7767, p7768

Notice: An ASCII table (excerpt) can be found, for example, in the appendix to the List Manual.

Note: KHP: Know-How Protection

p7759[0...19] KHP Control Unit reference serial number / KHP CU ref ser_no

CU_G130_DP, CU_G130_PN, CU_G150_DP, CU_G150_PN

Can be changed: T	**Calculated:** -	**Access level:** 3
Data type: Unsigned8	**Dynamic index:** -	**Func. diagram:** -
P-Group: -	**Units group:** -	**Unit selection:** -
Not for motor type: -	**Scaling:** -	**Expert list:** 1
Min	**Max**	**Factory setting**
-	-	-

Description: Sets the reference serial number for the Control Unit.
Using this parameter, if a Control Unit and/or a memory card is replaced at the end customer, the OEM can again adapt the project to the modified hardware.

Dependency: Refer to: p7765, p7766, p7767, p7768

Note: KHP: Know-How Protection
- The OEM may only change this parameter for the use case "Sending encrypted SINAMICS data".
- SINAMICS only evaluates this parameter when powering up from the encrypted "Load into file system..." output or when powering up from the encrypted PS files. The evaluation is only made when know-how protection and memory card copy protection have been activated.

© Siemens AG 2012 All Rights Reserved

r7760 Write protection/know-how protection status / Wr_prot/KHP stat

All objects

Can be changed: -	**Calculated:** -	**Access level:** 3
Data type: Unsigned16	**Dynamic index:** -	**Func. diagram:** -
P-Group: -	**Units group:** -	**Unit selection:** -
Not for motor type: -	**Scaling:** -	**Expert list:** 1
Min	**Max**	**Factory setting**
-	-	-

Description: Displays the status for the write protection and know-how protection.

Bit field:

Bit	Signal name	1 signal	0 signal	FP
00	Write protection active	Yes	No	-
01	Know-how protection active	Yes	No	-
02	Know-how protection temporarily withdrawn	Yes	No	-
03	Know-how protection cannot be deactivated	Yes	No	-
04	Memory card copy protection active	Yes	No	-

Dependency: Refer to: p7761, p7765, p7766, p7767, p7768

Notice: For bits 01 ... 04, the following applies:

For SIMOTION D410-2 these bits have no significance (they are always 0).

Note: KHP: Know-How Protection

Re bit 00:

Write protection can be activated/deactivated via p7761 on the Control Unit.

Re bit 01:

The know-how protection can be activated by entering a password (p7766 ... p7768).

Re bit 02:

If it has already been activated, know-how protection can be temporarily deactivated by entering the valid password in p7766. In this case, bit 1 = 0 and bit 2 = 1 offset.

Re bit 03:

Know-how protection cannot be deactivated, as p7766 is not entered in the OEM exception list (only the factory setting is possible). This bit is only set if know-how protection is active (bit 1 = 1) and p7766 has not been entered in the OEM exception list.

Re bit 04:

When know-how protection has been activated, the contents of the memory card (parameter and DCC data) can be additionally protected against being used with other memory cards. This bit is only set if know-how protection is active and p7765 = 1.

p7761 Write protection / Write protection

CU_G130_DP, CU_G130_PN, CU_G150_DP, CU_G150_PN

Can be changed: U, T	**Calculated:** -	**Access level:** 3
Data type: Integer16	**Dynamic index:** -	**Func. diagram:** -
P-Group: -	**Units group:** -	**Unit selection:** -
Not for motor type: -	**Scaling:** -	**Expert list:** 1
Min	**Max**	**Factory setting**
0	1	0

Description: Setting for activating/de-activating the write protection for adjustable parameters.

Value:
0: Deactivate write protection
1: Activate write protection

Dependency: Refer to: r7760

Note: While write protection is active, a download is prevented; however, it is still possible to restore the factory settings.

Examples of parameters, which for the SINAMICS drive family, are excluded from write protection:

p0003, p0124, p0144, p0154, p0971, p0977, p2017, p3950, p3980, p3981, p3982, p3983, p7761, p8560, p8562, p8563, p8564, p8821, p8822, p8830, p8831, p8832, p8833, p8834, p9210, p9211, p9400

© Siemens AG 2012 All Rights Reserved

p7762 Write protection multi-master fieldbus system access behavior / Fieldbus acc_behav

CU_G130_DP, CU_G130_PN, CU_G150_DP, CU_G150_PN

Can be changed: U, T	**Calculated:** -	**Access level:** 3
Data type: Integer16	**Dynamic index:** -	**Func. diagram:** -
P-Group: -	**Units group:** -	**Unit selection:** -
Not for motor type: -	**Scaling:** -	**Expert list:** 1
Min	**Max**	**Factory setting**
0	1	0

Description: Sets the behavior for write protection when accessing via multi-master fieldbus systems (e.g. CAN, BACnet).

Value:
0: Write access independent of p7761
1: Write access dependent on p7761

Dependency: Refer to: r7760, p7761

p7763 KHP OEM exception list number of indices for p7764 / KHP OEM qty p7764

All objects

Can be changed: U, T	**Calculated:** -	**Access level:** 3
Data type: Unsigned16	**Dynamic index:** -	**Func. diagram:** -
P-Group: -	**Units group:** -	**Unit selection:** -
Not for motor type: -	**Scaling:** -	**Expert list:** 1
Min	**Max**	**Factory setting**
1	500	1

Description: Sets the number of parameters for the OEM exception list (p7764[0...n]).
p7764[0...n], with n = p7763 - 1

Dependency: Refer to: p7764

Notice: For SIMOTION D410-2, this parameter has no significance.

Note: KHP: Know-How Protection
Even if know-how protection is set, parameters in this list can be read and written to.

p7764[0...n] KHP OEM exception list / KHP OEM excep list

B_INF, ENC, HUB, TB30, TM150, TM31, TM54F_MA, TM54F_SL, VECTOR_G

Can be changed: U, T	**Calculated:** -	**Access level:** 3
Data type: Unsigned16	**Dynamic index:** p7763	**Func. diagram:** -
P-Group: -	**Units group:** -	**Unit selection:** -
Not for motor type: -	**Scaling:** -	**Expert list:** 1
Min	**Max**	**Factory setting**
0	65535	0

Description: OEM exception list (p7764[0...n] for setting parameters that should be excluded from know-how protection.
p7764[0...n], with n = p7763 - 1

Dependency: The number of indices depends on p7763.
Refer to: p7763

Notice: For SIMOTION D410-2, this parameter has no significance.

Note: KHP: Know-How Protection
Even if know-how protection is set, parameters in this list can be read and written to.

p7764[0...n] KHP OEM exception list / KHP OEM excep list

CU_G130_DP, CU_G130_PN, CU_G150_DP, CU_G150_PN

Can be changed: U, T	**Calculated:** -	**Access level:** 3
Data type: Unsigned16	**Dynamic index:** p7763	**Func. diagram:** -
P-Group: -	**Units group:** -	**Unit selection:** -
Not for motor type: -	**Scaling:** -	**Expert list:** 1
Min	**Max**	**Factory setting**
0	65535	[0] 7766
		[1...499] 0

Description: OEM exception list (p7764[0...n] for setting parameters that should be excluded from know-how protection.
p7764[0...n], with n = p7763 - 1

© Siemens AG 2012 All Rights Reserved

Dependency: The number of indices depends on p7763.
Refer to: p7763

Notice: For SIMOTION D410-2, this parameter has no significance.

Note: KHP: Know-How Protection
Even if know-how protection is set, parameters in this list can be read and written to.

p7765 KHP memory card copy protection / KHP copy protect

CU_G130_DP, CU_G130_PN, CU_G150_DP, CU_G150_PN

Can be changed: U, T	**Calculated:** -	**Access level:** 3
Data type: Integer16	**Dynamic index:** -	**Func. diagram:** -
P-Group: -	**Units group:** -	**Unit selection:** -
Not for motor type: -	**Scaling:** -	**Expert list:** 1
Min	**Max**	**Factory setting**
0	1	0

Description: Setting for activating/de-activating copy protection for the memory card.
This means that the OEM can define whether the parameters and DCC data encrypted on the memory card should be protected before using on other memory cards.

Value:
0: Deactivating protection
1: Activating protection

Dependency: Refer to: p7766, p7767, p7768

Note: KHP: Know-How Protection
The memory card copy protection is only effective when the know-how protection has been activated.

p7766[0...29] KHP password input / KHP passw input

CU_G130_DP, CU_G130_PN, CU_G150_DP, CU_G150_PN

Can be changed: U, T	**Calculated:** -	**Access level:** 3
Data type: Unsigned16	**Dynamic index:** -	**Func. diagram:** -
P-Group: -	**Units group:** -	**Unit selection:** -
Not for motor type: -	**Scaling:** -	**Expert list:** 1
Min	**Max**	**Factory setting**
-	-	-

Description: Sets the password for know-how protection.
Example of a password:
123aBc = 49 50 51 97 66 99 dec (ASCII characters)
[0] = character 1 (e.g. 49 dec)
[1] = character 2 (e.g. 50 dec)
...
[5] = character 6 (e.g. 99 dec)
[29] = 0 dec (completes the entry)

Dependency: Refer to: p7767, p7768

Notice: An ASCII table (excerpt) can be found, for example, in the appendix to the List Manual.
When using the STARTER commissioning software, the password should be entered using the associated dialogs.

Note: KHP: Know-How Protection
When reading, p7766[0...29] = 42 dec (ASCII character = "*") is displayed.
When using the STARTER commissioning software, when reading via the expert list, p7766[0...29] is displayed with "********".
The following rules apply when entering the password:
- Password entry must start with p7766[0].
- No gaps are permissible in the password.
- Entering a password is completed when writing to p7766[29] (p7766[29] = 0 for passwords less than 30 characters).

© Siemens AG 2012 All Rights Reserved

p7767[0...29] KHP password new / KHP passw new

CU_G130_DP, CU_G130_PN, CU_G150_DP, CU_G150_PN	**Can be changed:** U, T	**Calculated:** -	**Access level:** 3
	Data type: Unsigned16	**Dynamic index:** -	**Func. diagram:** -
	P-Group: -	**Units group:** -	**Unit selection:** -
	Not for motor type: -	**Scaling:** -	**Expert list:** 1
	Min	**Max**	**Factory setting**
	-	-	-

Description: Sets the new password for know-how protection.

Dependency: Refer to: p7766, p7768

Note: KHP: Know-How Protection

When reading, p7767[0...29] = 42 dec (ASCII character = "*") is displayed.

p7768[0...29] KHP password confirmation / KHP passw confirm

CU_G130_DP, CU_G130_PN, CU_G150_DP, CU_G150_PN	**Can be changed:** U, T	**Calculated:** -	**Access level:** 3
	Data type: Unsigned16	**Dynamic index:** -	**Func. diagram:** -
	P-Group: -	**Units group:** -	**Unit selection:** -
	Not for motor type: -	**Scaling:** -	**Expert list:** 1
	Min	**Max**	**Factory setting**
	-	-	-

Description: Confirms the new password for know-how protection.

Dependency: Refer to: p7766, p7767

Note: KHP: Know-How Protection

When reading, p7768[0...29] = 42 dec (ASCII character = "*") is displayed.

p7769[0...20] KHP memory card reference serial number / KHP mem ref ser_no

CU_G130_DP, CU_G130_PN, CU_G150_DP, CU_G150_PN	**Can be changed:** T	**Calculated:** -	**Access level:** 3
	Data type: Unsigned8	**Dynamic index:** -	**Func. diagram:** -
	P-Group: -	**Units group:** -	**Unit selection:** -
	Not for motor type: -	**Scaling:** -	**Expert list:** 1
	Min	**Max**	**Factory setting**
	-	-	-

Description: Sets the reference serial number for the memory card.

Using this parameter, if a Control Unit and/or a memory card is replaced at the end customer, the OEM can again adapt the project to the modified hardware.

Dependency: Refer to: p7765, p7766, p7767, p7768

Note: KHP: Know-How Protection

- The OEM may only change this parameter for the use case "Sending encrypted SINAMICS data".

- SINAMICS only evaluates this parameter when powering up from the encrypted "Load into file system..." output or when powering up from the encrypted PS files. The evaluation is only made when know-how protection and memory card copy protection have been activated.

p7770 NVRAM action / NVRAM action

B_INF, ENC, HUB, TB30, TM150, TM31, TM54F_MA, TM54F_SL, VECTOR_G	**Can be changed:** T	**Calculated:** -	**Access level:** 3
	Data type: Integer16	**Dynamic index:** -	**Func. diagram:** -
	P-Group: -	**Units group:** -	**Unit selection:** -
	Not for motor type: -	**Scaling:** -	**Expert list:** 1
	Min	**Max**	**Factory setting**
	0	3	0

Description: Sets the action to be executed for NVRAM data.

At the end of the action the value is automatically set to 0.

© Siemens AG 2012 All Rights Reserved

Value:
0: Inactive
1: Load NVRAM data to parameters
2: Load parameters to NVRAM
3: Reset

Notice:
After action p7770 = 1 no more pulses may be enabled.
After action p7770 = 2, it is essential that parameters are backed up (p0977 = 1) and that a warm restart is then performed (p0009 = 30, p0976 = 2, 3). This will apply the values written.

Note:
If value = 1:
This action loads the NVRAM data to the parameters.
If value = 2:
This action loads the parameters to the NVRAM.
If value = 3:
This action sets parameters p7771 ... p7774 to the factory setting.
It is recommended to avoid placing unnecessary load on the subsequent upload/download operation.

p7775 NVRAM data backup/import/delete / NVRAM backup

CU_G130_DP, CU_G130_PN, CU_G150_DP, CU_G150_PN

Can be changed: C1, T	**Calculated:** -	**Access level:** 3
Data type: Integer16	**Dynamic index:** -	**Func. diagram:** -
P-Group: -	**Units group:** -	**Unit selection:** -
Not for motor type: -	**Scaling:** -	**Expert list:** 1
Min	**Max**	**Factory setting**
0	17	0

Description:
Setting to backup/import/delete NVRAM data.
NVRAM data are non-volatile data in the device (e.g. fault buffer).
For NVRAM data actions, the following data are excluded:
- Crash diagnostics
- CU operating hours counter
- CU temperature
- Safety logbook

Value:
0: Inactive
1: NVRAM data backup to memory card
2: Import NVRAM data from the memory card
3: Delete NVRAM data in the device
10: Error when clearing
11: Error when backing up, memory card not available
12: Error when backing up, insufficient memory space
13: Error when backing up
14: Error when importing, memory card not available
15: Error when importing, checksum error
16: Error when importing, no NVRAM data available
17: Error when importing

Notice:
Re value = 2, 3:
These actions are only possible when pulses are inhibited.

Note:
After the action has been successfully completed, the parameter is automatically set to zero.
The actions importing and deleting NVRAM data immediately initiate a warm restart.
If the procedure was not successfully completed, then an appropriate fault value is displayed (p7775 >= 10).

p7788 Power unit sign-of-life monitoring tolerance window / PU SoL monit tol

B_INF, VECTOR_G

Can be changed: U, T	**Calculated:** -	**Access level:** 4
Data type: Unsigned16	**Dynamic index:** -	**Func. diagram:** -
P-Group: Converter	**Units group:** -	**Unit selection:** -
Not for motor type: -	**Scaling:** -	**Expert list:** 1
Min	**Max**	**Factory setting**
1	1000	10

Description:
Setting of the tolerance window for the sign of life monitoring for communication to the power unit.

© Siemens AG 2012 All Rights Reserved

Dependency: Refer to: A30853
Note: An active window is generated by means of DRIVE-CLiQ telegrams.
If more than one sign-of-life error appears in the window, then A30853 is output.
The lower the value in p7788, the greater the monitoring tolerance.

p7789 Power unit sign-of-life monitoring fault threshold / PU SoL monit F_thr

B_INF, VECTOR_G

Can be changed: U, T	**Calculated:** -	**Access level:** 4
Data type: Unsigned16	**Dynamic index:** -	**Func. diagram:** -
P-Group: Converter	**Units group:** -	**Unit selection:** -
Not for motor type: -	**Scaling:** -	**Expert list:** 1
Min	**Max**	**Factory setting**
0	1000	1

Description: Sets the number of consecutive sign-of-life errors that are tolerated for communication to the power unit.
Dependency: Refer to: F30008
Note: F30008 is output in the case of a fault.
The higher the value in the parameter, the higher the monitoring tolerance.

p7820 DRIVE-CLiQ component component number / DLQ comp_no

CU_G130_DP, CU_G130_PN, CU_G150_DP, CU_G150_PN

Can be changed: U, T	**Calculated:** -	**Access level:** 4
Data type: Unsigned16	**Dynamic index:** -	**Func. diagram:** -
P-Group: -	**Units group:** -	**Unit selection:** -
Not for motor type: -	**Scaling:** -	**Expert list:** 1
Min	**Max**	**Factory setting**
0	65535	0

Description: Sets the component number of the DRIVE-CLiQ component whose parameters are to be accessed.
Dependency: Refer to: p7821, p7822, r7823

p7821 DRIVE-CLiQ component parameter number / DLQ para_no

CU_G130_DP, CU_G130_PN, CU_G150_DP, CU_G150_PN

Can be changed: U, T	**Calculated:** -	**Access level:** 4
Data type: Unsigned16	**Dynamic index:** -	**Func. diagram:** -
P-Group: -	**Units group:** -	**Unit selection:** -
Not for motor type: -	**Scaling:** -	**Expert list:** 1
Min	**Max**	**Factory setting**
0	65535	0

Description: Sets the parameter number to access a parameter of a DRIVE-CLiQ component.
Dependency: Refer to: p7820, p7822, r7823

p7822 DRIVE-CLiQ component parameter index / DLQ para_index

CU_G130_DP, CU_G130_PN, CU_G150_DP, CU_G150_PN

Can be changed: U, T	**Calculated:** -	**Access level:** 4
Data type: Unsigned16	**Dynamic index:** -	**Func. diagram:** -
P-Group: -	**Units group:** -	**Unit selection:** -
Not for motor type: -	**Scaling:** -	**Expert list:** 1
Min	**Max**	**Factory setting**
0	65535	0

Description: Sets the parameter index to access a parameter of a DRIVE-CLiQ component.
Dependency: Refer to: p7820, p7821, r7823

© Siemens AG 2012 All Rights Reserved

r7823 DRIVE-CLiQ component read parameter value / Read DLQ value

CU_G130_DP, CU_G130_PN, CU_G150_DP, CU_G150_PN	**Can be changed:** -	**Calculated:** -	**Access level:** 4
	Data type: Unsigned32	**Dynamic index:** -	**Func. diagram:** -
	P-Group: -	**Units group:** -	**Unit selection:** -
	Not for motor type: -	**Scaling:** -	**Expert list:** 1
	Min	**Max**	**Factory setting**
	-	-	-

Description: Displays the parameter value read from the DRIVE-CLiQ component.

Dependency: Refer to: p7820, p7821, p7822

r7825[0...6] DRIVE-CLiQ component versions / DLQ version

CU_G130_DP, CU_G130_PN, CU_G150_DP, CU_G150_PN	**Can be changed:** -	**Calculated:** -	**Access level:** 3
	Data type: Unsigned32	**Dynamic index:** -	**Func. diagram:** -
	P-Group: -	**Units group:** -	**Unit selection:** -
	Not for motor type: -	**Scaling:** -	**Expert list:** 1
	Min	**Max**	**Factory setting**
	-	-	-

Description: Displays the firmware and EPROM versions of the DRIVE-CLiQ component selected using p7828[1].

Index:
[0] = Reference firmware version
[1] = Actual firmware version
[2] = EPROM0 version
[3] = EPROM1 version
[4] = EPROM2 version
[5] = EPROM3 version
[6] = EPROM4 version

Dependency: Refer to: p7828

Note: Reference firmware version: Version on the memory card/device memory.
Current firmware version: Actual version of the DRIVE-CLiQ component.
EPROM version: Current EPROM version of the DRIVE-CLiQ component.

p7826 Firmware update automatic / FW update auto

CU_G130_DP, CU_G130_PN, CU_G150_DP, CU_G150_PN	**Can be changed:** U, T	**Calculated:** -	**Access level:** 3
	Data type: Integer16	**Dynamic index:** -	**Func. diagram:** -
	P-Group: -	**Units group:** -	**Unit selection:** -
	Not for motor type: -	**Scaling:** -	**Expert list:** 1
	Min	**Max**	**Factory setting**
	0	2	1

Description: Sets the behavior for the automatic firmware update of the DRIVE-CLiQ components.

Value:
0: De-activated
1: Upgrade and downgrade
2: Upgrade

Notice: If this parameter is changed, it only becomes effective the next time that the drive system boots.

Note: The firmware is automatically updated when the system boots. The boot can take several minutes.
After the update has been completed, it is necessary to carry out a new POWER ON (power-down/power-up) for the components involved.
The firmware update procedure is displayed as follows:
Control Unit (LED RDY):
Flashes yellow with 0.5 Hz --> firmware is being updated.
Flashing yellow with 2 Hz --> POWER ON is required for the components involved.
Components involved:
Flashing red/green with 0.5 Hz --> firmware is being updated.
Flashing red/green with 2 Hz --> POWER ON of the components is required.
Only components from firmware version 2.5 support the red/green flashing at 2 Hz.

© Siemens AG 2012 All Rights Reserved

r7827 Firmware update progress display / FW update progress

CU_G130_DP, CU_G130_PN, CU_G150_DP, CU_G150_PN	**Can be changed:** -	**Calculated:** -	**Access level:** 3
	Data type: FloatingPoint32	**Dynamic index:** -	**Func. diagram:** -
	P-Group: -	**Units group:** -	**Unit selection:** -
	Not for motor type: -	**Scaling:** -	**Expert list:** 1
	Min	**Max**	**Factory setting**
	- [%]	- [%]	- [%]

Description: Displays the progress when updating the firmware of the DRIVE-CLiQ components.

p7828[0...1] Firmware download component number / FW downl comp_no

CU_G130_DP, CU_G130_PN, CU_G150_DP, CU_G150_PN	**Can be changed:** U, T	**Calculated:** -	**Access level:** 3
	Data type: Unsigned16	**Dynamic index:** -	**Func. diagram:** -
	P-Group: -	**Units group:** -	**Unit selection:** -
	Not for motor type: -	**Scaling:** -	**Expert list:** 1
	Min	**Max**	**Factory setting**
	0	399	0

Description: Sets the component number for the required DRIVE-CLiQ component.

Index 0:

Component number of the DRIVE-CLiQ component for which a firmware download is to be made.

Index 1:

Component number of the DRIVE-CLiQ component for which the reference firmware version, saved in r7825 on the memory card/device memory, is to be displayed.

Index: [0] = Firmware download
[1] = Reference firmware version

Dependency: Refer to: p0121, p0141, p0151, p7829

Note: For p7828[0] = 399, the firmware for all of the existing components is downloaded.

The firmware download is started with p7829 = 1.

p7829 Activate firmware download / FW download act

CU_G130_DP, CU_G130_PN, CU_G150_DP, CU_G150_PN	**Can be changed:** U, T	**Calculated:** -	**Access level:** 3
	Data type: Integer16	**Dynamic index:** -	**Func. diagram:** -
	P-Group: -	**Units group:** -	**Unit selection:** -
	Not for motor type: -	**Scaling:** -	**Expert list:** 1
	Min	**Max**	**Factory setting**
	-1	999	0

Description: Activating the firmware download for the DRIVE-CLiQ components specified in p7828.

1: Activate download.

-1: activate the download and carry out a reset.

0: Download successfully completed.

> 1: Fault code

011: DRIVE-CLiQ component has detected a checksum error.

015: The selected DRIVE-CLiQ components did not accept the contents of the firmware file.

018: Firmware version is too old and is not accepted by the component.

019: Firmware version is not suitable for the hardware release of the component.

101: After several communication attempts, no response from the DRIVE-CLiQ component.

140: Firmware file for the DRIVE-CLiQ component not available on the memory card/device memory.

143: Component has not changed to the mode for firmware download. It was not possible to delete the existing firmware.

144: When checking the firmware that was downloaded (checksum), the component detected a fault. It is possible that the file on the memory card/device memory is defective.

145: Checking the loaded firmware (checksum) was not completed by the component in the appropriate time.

156: Component with the specified component number is not available.

© Siemens AG 2012 All Rights Reserved

Additional values:
Only for internal Siemens troubleshooting.

Dependency: Refer to: p7828

Note: p7829 is automatically set to 0 after the firmware has been successfully downloaded.
The new firmware only becomes active at the next system run-up.

p7830 Diagnostics telegram selection / Diag telegram

ENC, VECTOR_G

Can be changed: T	**Calculated:** -	**Access level:** 4
Data type: Integer16	**Dynamic index:** -	**Func. diagram:** -
P-Group: -	**Units group:** -	**Unit selection:** -
Not for motor type: -	**Scaling:** -	**Expert list:** 1
Min	**Max**	**Factory setting**
0	3	0

Description: Selects a telegram whose contents should be shown in p7831 ... p7836.

Value:
0: Reserved
1: First cyclic receive telegram sensor 1
2: First cyclic receive telegram sensor 2
3: First cyclic receive telegram sensor 3

Dependency: Refer to: r7831, r7832, r7833, r7834, r7835, r7836

r7831[0...15] Telegram diagnostics signals / Tel diag signals

ENC, VECTOR_G

Can be changed: -	**Calculated:** -	**Access level:** 4
Data type: Integer16	**Dynamic index:** -	**Func. diagram:** -
P-Group: -	**Units group:** -	**Unit selection:** -
Not for motor type: -	**Scaling:** -	**Expert list:** 1
Min	**Max**	**Factory setting**
0	15157	-

Description: Displays the signals contained in the selected telegram (p7830).

Value:
0: UNUSED
1: UNKNOWN
102: SAPAR_ID_DSA_ALARM
110: SAPAR_ALARMBITS_FLOAT_0
111: SAPAR_ALARMBITS_FLOAT_1
112: SAPAR_ALARMBITS_FLOAT_2
113: SAPAR_ALARMBITS_FLOAT_3
114: SAPAR_ALARMBITS_FLOAT_4
115: SAPAR_ALARMBITS_FLOAT_5
10500: ENC_ID_TIME_PRETRIGGER
10501: ENC_ID_TIME_SEND_TELEG_1
10502: ENC_ID_TIME_CYCLE_FINISHED
10503: ENC_ID_TIME_DELTA_FUNMAN
10504: ENC_ID_SUBTRACE_CALCTIMES
10505: ENC_ID_SYNO_PERIOD
10516: ENC_ID_ADC_TRACK_A
10517: ENC_ID_ADC_TRACK_B
10518: ENC_ID_ADC_TRACK_C
10519: ENC_ID_ADC_TRACK_D
10520: ENC_ID_ADC_TRACK_A_SAFETY
10521: ENC_ID_ADC_TRACK_B_SAFETY
10523: ENC_ID_ADC_TEMP_1
10526: ENC_ID_ADC_TRACK_R
10532: ENC_ID_TRACK_AB_X
10533: ENC_ID_TRACK_AB_Y
10534: ENC_ID_OFFSET_CORR_AB_X
10535: ENC_ID_OFFSET_CORR_AB_Y
10536: ENC_ID_AB_ABS_VALUE
10537: ENC_ID_TRACK_CD_X
10538: ENC_ID_TRACK_CD_Y

© Siemens AG 2012 All Rights Reserved

10539: ENC_ID_TRACK_CD_ABS
10542: ENC_ID_AB_RAND_X
10543: ENC_ID_AB_RAND_Y
10544: ENC_ID_AB_RAND_ABS_VALUE
10545: ENC_ID_SUBTRACE_ABS_ARRAY
10546: ENC_ID_PROC_OFFSET_0
10547: ENC_ID_PROC_OFFSET_4
10564: ENC_SELFTEMP_ACT
10565: ENC_ID_MOTOR_TEMP_TOP
10566: ENC_ID_MOTOR_TEMP_1
10580: ENC_ID_RESISTANCE_1
10590: ENC_ID_ANA_CHAN_A
10591: ENC_ID_ANA_CHAN_B
10592: ENC_ID_ANA_CHAN_X
10593: ENC_ID_ANA_CHAN_Y
10596: ENC_ID_AB_ANGLE
10597: ENC_ID_CD_ANGLE
10598: ENC_ID_MECH_ANGLE_HI
10599: ENC_ID_RM_POS_PHI_COMMU
10600: ENC_ID_PHI_COMMU
10612: ENC_ID_DIFF_CD_INC
10613: ENC_ID_RM_POS_PHI_COMMU_RFG
10628: ENC_ID_MECH_ANGLE
10629: ENC_ID_MECH_RM_POS
10644: ENC_ID_INIT_VECTOR
10645: FEAT_INIT_VECTOR
10660: ENC_ID_SENSOR_STATE
10661: ENC_ID_BASIC_SYSTEM
10662: ENC_ID_REFMARK_STATUS
10663: ENC_ID_DSA_STATUS1_SENSOR
10664: ENC_ID_DSA_RMSTAT_HANDSHAKE
10665: ENC_ID_DSA_CONTROL1_SENSOR
10667: ENC_ID_SAFETY
10676: ENC_ID_COUNTCORR_SAW_VALUE
10677: ENC_ID_COUNTCORR_ABS_VALUE
10678: ENC_ID_SAWTOOTH_CORR
10692: ENC_ID_RESISTANCE_CALIB_INSTANT
10693: ENC_ID_SERPROT_POS
10724: ENC_ID_ACT_FUNMAN_FUNCTION
10725: ENC_ID_SAFETY_COUNTER_CRC
10740: ENC_ID_POS_ABSOLUTE
10741: ENC_ID_POS_REFMARK
10742: ENC_ID_SAWTOOTH
10743: ENC_ID_SAFETY_PULSE_COUNTER
10756: ENC_ID_DSA_ACTUAL_SPEED
10757: ENC_ID_SPEED_DEV_ABS
10772: ENC_ID_DSA_POS_XIST1
10788: ENC_ID_AB_CROSS_CORR
10789: ENC_ID_AB_GAIN_Y_CORR
10790: ENC_ID_AB_PEAK_CORR
11825: ENC_ID_RES_TRANSITION_RATIO
11826: ENC_ID_RES_PHASE_SHIFT
15150: ENC_ID_SPINDLE_S1_RAW
15151: ENC_ID_SPINDLE_S4_RAW
15152: ENC_ID_SPINDLE_S5_RAW
15155: ENC_ID_SPINDLE_S1_CAL
15156: ENC_ID_SPINDLE_S4_CAL
15157: ENC_ID_SPINDLE_S5_CAL

© Siemens AG 2012 All Rights Reserved

r7832[0...15] Telegram diagnostics numerical format / tel diag format

ENC, VECTOR_G	**Can be changed:** -	**Calculated:** -	**Access level:** 4
	Data type: Integer16	**Dynamic index:** -	**Func. diagram:** -
	P-Group: -	**Units group:** -	**Unit selection:** -
	Not for motor type: -	**Scaling:** -	**Expert list:** 1
	Min	**Max**	**Factory setting**
	-1	14	-

Description: Displays the original numerical format of the signals contained in the telegram.
The associated signal number is represented in the appropriate index of r7831.

Value:
-1: Unknown
0: Boolean
1: Signed 1 byte
2: Signed 2 byte
3: Signed 4 byte
4: Signed 8 byte
5: Unsigned 1 byte
6: Unsigned 2 byte
7: Unsigned 4 byte
8: Unsigned 8 byte
9: Float 4 byte
10: Double 8 byte
11: mm dd yy HH MM SS MS DOW
12: ASCII string
13: SINUMERIK frame type
14: SINUMERIK axis type

Dependency: Refer to: r7831

r7833[0...15] Telegram diagnostics unsigned / Tel diag unsigned

ENC, VECTOR_G	**Can be changed:** -	**Calculated:** -	**Access level:** 4
	Data type: Unsigned32	**Dynamic index:** -	**Func. diagram:** -
	P-Group: -	**Units group:** -	**Unit selection:** -
	Not for motor type: -	**Scaling:** -	**Expert list:** 1
	Min	**Max**	**Factory setting**
	-	-	-

Description: Parameter to display a DSA signal in the unsigned-integer format.
The associated signal number is represented at the appropriate index in r7831.

r7834[0...15] Telegram diagnostics signed / Tel diag signed

ENC, VECTOR_G	**Can be changed:** -	**Calculated:** -	**Access level:** 4
	Data type: Integer32	**Dynamic index:** -	**Func. diagram:** -
	P-Group: -	**Units group:** -	**Unit selection:** -
	Not for motor type: -	**Scaling:** -	**Expert list:** 1
	Min	**Max**	**Factory setting**
	-	-	-

Description: Parameter to display a DSA signal in the signed-integer format.
The associated signal number is represented at the appropriate index in r7831.

© Siemens AG 2012 All Rights Reserved

r7835[0...15] Telegram diagnostics real / Tel diag real

ENC, VECTOR_G	**Can be changed:** -	**Calculated:** -	**Access level:** 4
	Data type: FloatingPoint32	**Dynamic index:** -	**Func. diagram:** -
	P-Group: -	**Units group:** -	**Unit selection:** -
	Not for motor type: -	**Scaling:** -	**Expert list:** 1
	Min	**Max**	**Factory setting**
	-	-	-

Description: Parameter to display a DSA signal in the float format.
The associated signal number is represented at the appropriate index in r7831.

r7836[0...15] Telegram diagnostics unit / Tel diag unit

ENC, VECTOR_G	**Can be changed:** -	**Calculated:** -	**Access level:** 4
	Data type: Integer16	**Dynamic index:** -	**Func. diagram:** -
	P-Group: -	**Units group:** -	**Unit selection:** -
	Not for motor type: -	**Scaling:** -	**Expert list:** 1
	Min	**Max**	**Factory setting**
	-1	147	-

Description: Displays the units of a DSA signal.
The associated signal number is represented at the appropriate index in r7831.

Value:
-1: Unknown
0: None
1: Millimeter or degrees
2: Millimeter
3: Degrees
4: mm/min or RPM
5: Millimeter / min
6: Revolutions / min
7: m/sec^2 or U/sec^2
8: m/sec^2
9: U/sec^2
10: m/sec^3 or U/sec^3
11: m/sec^3
12: U/sec^3
13: sec
14: 16.667 / sec
15: mm/revolution
16: ACX_UNIT_COMPENSATION_CORR
18: Newton
19: Kilogram
20: Kilogram meter^2
21: Percent
22: Hertz
23: Volt peak-to-peak
24: Amps peak-to-peak
25: Degrees Celsius
26: Degrees
28: Millimeter or degrees
29: Meters / minute
30: Meters / second
31: ohm
32: Millihenry
33: Newton meter
34: Newton meter/Ampere
35: Volt/Ampere
36: Newton meter second / rad
38: 31.25 microseconds
39: Microseconds
40: Milliseconds

© Siemens AG 2012 All Rights Reserved

42: Kilowatt
43: Micro amps peak-to-peak
44: Volt seconds
45: Microvolt seconds
46: Micro newton meters
47: Amps / volt seconds
48: Per mille
49: Hertz / second
53: Micrometer or millidegrees
54: Micrometer
55: Millidegrees
59: Nanometer
61: Newton/Amps
62: Volt seconds/meter
63: Newton seconds/meter
64: Micronewton
65: Liters / minute
66: Bar
67: Cubic centimeters
68: Millimeter / volt minute
69: Newton/Volt
80: Millivolts peak-to-peak
81: Volt rms
82: Millivolts rms
83: Amps rms
84: Micro amps rms
85: Micrometers / revolution
90: Tenths of a second
91: Hundredths of a second
92: 10 microseconds
93: Pulses
94: 256 pulses
95: Tenths of a pulse
96: Revolutions
97: 100 revolutions / minute
98: 10 revolutions / minute
99: 0.1 revolutions / minute
100: Thousandth revolution / minute
101: Pulses / second
102: 100 pulses / second
103: 10 revolutions / (minute x seconds)
104: 10000 pulses/second^2
105: 0.1 Hertz
106: 0.01 Hertz
107: 0.1 / seconds
108: Factor 0.1
109: Factor 0.01
110: Factor 0.001
111: Factor 0.0001
112: 0.1 Volt peak-to-peak
113: 0.1 Volt peak-to-peak
114: 0.1 amps peak-to-peak
115: Watt
116: 100 Watt
117: 10 Watt
118: 0.01 percent
119: 1/second^3
120: 0.01 percent/millisecond
121: Pulses / revolution
122: Microfarads
123: Milliohm
124: 0.01 Newton meter
125: Kilogram millimeter^2
126: Rad / (seconds newton meter)

© Siemens AG 2012 All Rights Reserved

127: Henry
128: Kelvin
129: Hours
130: Kilohertz
131: Milliamperes peak-to-peak
132: Millifarads
133: Meter
135: Kilowatt hours
136: Percent
137: Amps / Volt
138: Volt
139: Millivolts
140: Microvolts
141: Amps
142: Milliamperes
143: Micro amps
144: Milliamperes rms
145: Millimeter
146: Nanometer
147: Joules

r7843[0...20] Memory card serial number / Mem_card ser.no

CU_G130_DP, CU_G130_PN, CU_G150_DP, CU_G150_PN

Can be changed: -	**Calculated:** -	**Access level:** 1
Data type: Unsigned8	**Dynamic index:** -	**Func. diagram:** -
P-Group: -	**Units group:** -	**Unit selection:** -
Not for motor type: -	**Scaling:** -	**Expert list:** 1
Min	**Max**	**Factory setting**
-	-	-

Description: Displays the actual serial number of the memory card.
The individual characters of the serial number are displayed in the ASCII code in the indices.

Dependency: Refer to: p9920, p9921

Notice: An ASCII table (excerpt) can be found, for example, in the appendix to the List Manual.

Note: Example: displaying the serial number for a memory card:
r7843[0] = 49 dec --> ASCII characters = "1" --> serial number, character 1
r7843[1] = 49 dec --> ASCII characters = "1" --> serial number, character 2
r7843[2] = 49 dec --> ASCII characters = "1" --> serial number, character 3
r7843[3] = 57 dec --> ASCII characters = "9" --> serial number, character 4
r7843[4] = 50 dec --> ASCII characters = "2" --> serial number, character 5
r7843[5] = 51 dec --> ASCII characters = "3" --> serial number, character 6
r7843[6] = 69 dec --> ASCII characters = "E" --> serial number, character 7
r7843[7] = 0 dec --> ASCII characters = " " --> serial number, character 8
...
r7843[19] = 0 dec --> ASCII characters = " " --> serial number, character 20
r7843[20] = 0 dec
Serial number = 111923E

r7844[0...2] Memory card/device memory firmware version / Mem_crd/dev_mem FW

CU_G130_DP, CU_G130_PN, CU_G150_DP, CU_G150_PN

Can be changed: -	**Calculated:** -	**Access level:** 1
Data type: Unsigned32	**Dynamic index:** -	**Func. diagram:** -
P-Group: -	**Units group:** -	**Unit selection:** -
Not for motor type: -	**Scaling:** -	**Expert list:** 1
Min	**Max**	**Factory setting**
-	-	-

Description: Displays the version of the firmware stored on the memory card/device memory.

© Siemens AG 2012 All Rights Reserved

Index: [0] = Internal
[1] = External
[2] = Parameter backup

Note: Re index 0:
Displays the internal firmware version (e.g. 04402315).
This firmware version is the version of the memory card/device memory and not the CU firmware (r0018), however, normally they have the same versions.
Re index 1:
Displays the external firmware version (e.g. 04040000 -> 4.4).
For automation systems with SINAMICS Integrated this is the runtime version of the automation system.
Re index 2:
Displays the internal CU firmware version (r0018) of the parameter backup.
With this CU firmware version, the parameter backup was saved, which was used when powering up.

r7850[0...23] Drive object operational/not operational / DO ready for oper

CU_G130_DP, CU_G130_PN, CU_G150_DP, CU_G150_PN

Can be changed: -	**Calculated:** -	**Access level:** 4
Data type: Integer16	**Dynamic index:** -	**Func. diagram:** -
P-Group: -	**Units group:** -	**Unit selection:** -
Not for motor type: -	**Scaling:** -	**Expert list:** 1
Min	**Max**	**Factory setting**
-32786	32767	-

Description: Displays whether, for an activated drive object, all activated topology components are available or not (or whether these can be addressed).
0: Drive object not ready for operation
1: Drive object ready for operation

p7852 Number of indices for r7853 / Qty indices r7853

CU_G130_DP, CU_G130_PN, CU_G150_DP, CU_G150_PN

Can be changed: U, T	**Calculated:** -	**Access level:** 4
Data type: Unsigned16	**Dynamic index:** -	**Func. diagram:** -
P-Group: -	**Units group:** -	**Unit selection:** -
Not for motor type: -	**Scaling:** -	**Expert list:** 1
Min	**Max**	**Factory setting**
1	200	1

Description: Displays the number of indices for r7853[0...n].
This corresponds to the number of DRIVE-CLiQ components that are in the target topology.

Dependency: Refer to: r7853

Note: The values are valid if all available Control Units adopt the "Initialization finished" state (r3988 = 800) following power-up.

r7853[0...n] Component available/not available / Comp present

CU_G130_DP, CU_G130_PN, CU_G150_DP, CU_G150_PN

Can be changed: -	**Calculated:** -	**Access level:** 4
Data type: Unsigned16	**Dynamic index:** p7852	**Func. diagram:** -
P-Group: -	**Units group:** -	**Unit selection:** -
Not for motor type: -	**Scaling:** -	**Expert list:** 1
Min	**Max**	**Factory setting**
0000 hex	FFFF hex	-

Description: Displays the component and whether this component is currently present.
High byte: Component number
Low byte: 0/1 (not available/available)

Dependency: Refer to: p7852

Note: The values are valid if all available Control Units adopt the "Initialization finished" state (r3988 = 800) following power-up.

© Siemens AG 2012 All Rights Reserved

p7857 Sub-boot mode / Sub-boot mode

B_INF, ENC, HUB, TB30, TM150, TM31, TM54F_MA, TM54F_SL, VECTOR_G	**Can be changed:** U, T	**Calculated:** -	**Access level:** 4
	Data type: Integer16	**Dynamic index:** -	**Func. diagram:** -
	P-Group: -	**Units group:** -	**Unit selection:** -
	Not for motor type: -	**Scaling:** -	**Expert list:** 1
	Min	**Max**	**Factory setting**
	0	1	1

Description: Sets the mode for the sub-boot.

Value:
0: Sub-boot manual
1: Sub-boot automatic

Note: For p7857 = 0 (manual sub-boot) the following applies:
The parameter should be set to 1 to start the sub-boot.

p7859[0...199] Component number global / Comp_nr global

CU_G130_DP, CU_G130_PN, CU_G150_DP, CU_G150_PN	**Can be changed:** U, T	**Calculated:** -	**Access level:** 4
	Data type: Integer16	**Dynamic index:** -	**Func. diagram:** -
	P-Group: -	**Units group:** -	**Unit selection:** -
	Not for motor type: -	**Scaling:** -	**Expert list:** 0
	Min	**Max**	**Factory setting**
	-32786	32767	0

Description: Sets the global and unique component number in a drive system with several Control Units.
Each index of the parameter corresponds to a possible local component number on the corresponding Control Unit.
The indices are allocated to the global component numbers as follows:
p7859[0]: Not used
p7859[1]: Sets the global component number for the local component number 1
p7859[2]: Sets the global component number for the local component number 2
...
p7859[199]: Sets the global component number for the local component number 199

Notice: This parameter is preferably set via suitable commissioning software (e.g. UpdateAgent, STARTER, SCOUT).
Changing the parameter via the AOP (Advanced Operator Panel) or BOP (Basic Operator Panel) can destroy a valid unique setting.

Note: The parameter is not influenced by setting the factory setting.

r7867 Status/configuration changes global / Changes global

CU_G130_DP, CU_G130_PN, CU_G150_DP, CU_G150_PN	**Can be changed:** -	**Calculated:** -	**Access level:** 4
	Data type: Unsigned32	**Dynamic index:** -	**Func. diagram:** -
	P-Group: -	**Units group:** -	**Unit selection:** -
	Not for motor type: -	**Scaling:** -	**Expert list:** 1
	Min	**Max**	**Factory setting**
	-	-	-

Description: Displays status and configuration changes of all of the drive objects in the complete unit.
When changing the status or the configuration of the Control Unit or a drive object, the value of this parameter is incremented.

Dependency: Refer to: r7868, r7869, r7870

© Siemens AG 2012 All Rights Reserved

r7868[0...24] Configuration changes drive object reference / Config_chng DO ref

CU_G130_DP, CU_G130_PN, CU_G150_DP, CU_G150_PN	**Can be changed:** -	**Calculated:** -	**Access level:** 4
	Data type: Unsigned32	**Dynamic index:** -	**Func. diagram:** -
	P-Group: -	**Units group:** -	**Unit selection:** -
	Not for motor type: -	**Scaling:** -	**Expert list:** 1
	Min	**Max**	**Factory setting**
	-	-	-

Description:

Reference to the drive objects whose configuration has changed.

Index 0:

When changing one of the following indices, then the value in this index is increased.

Index 1...n:

The drive object with object number in p0101[n-1] has changed its configuration.

Example:

r7868[3] was incremented since the last time it was read.

--> the configuration of the drive object with object number in p0101[2] was changed.

Index:

[0] = Sum of the following indices
[1] = Object number in p0101[0]
[2] = Object number in p0101[1]
[3] = Object number in p0101[2]
[4] = Object number in p0101[3]
[5] = Object number in p0101[4]
[6] = Object number in p0101[5]
[7] = Object number in p0101[6]
[8] = Object number in p0101[7]
[9] = Object number in p0101[8]
[10] = Object number in p0101[9]
[11] = Object number in p0101[10]
[12] = Object number in p0101[11]
[13] = Object number in p0101[12]
[14] = Object number in p0101[13]
[15] = Object number in p0101[14]
[16] = Object number in p0101[15]
[17] = Object number in p0101[16]
[18] = Object number in p0101[17]
[19] = Object number in p0101[18]
[20] = Object number in p0101[19]
[21] = Object number in p0101[20]
[22] = Object number in p0101[21]
[23] = Object number in p0101[22]
[24] = Object number in p0101[23]

Dependency:

Refer to: p0101, r7867, r7871

r7869[0...24] Status changes drive object reference / Status_chng DO ref

CU_G130_DP, CU_G130_PN, CU_G150_DP, CU_G150_PN	**Can be changed:** -	**Calculated:** -	**Access level:** 4
	Data type: Unsigned32	**Dynamic index:** -	**Func. diagram:** -
	P-Group: -	**Units group:** -	**Unit selection:** -
	Not for motor type: -	**Scaling:** -	**Expert list:** 1
	Min	**Max**	**Factory setting**
	-	-	-

Description:

Reference to the drive objects whose status has changed.

Index 0:

When changing one of the following indices, then the value in this index is increased.

Index 1...n:

The drive object with object number in p0101[n-1] has changed its status.

© Siemens AG 2012 All Rights Reserved

Example:
r7868[3] was incremented since the last time it was read.
--> the status of the drive object with object number in p0101[2] was changed.

Index:
[0] = Sum of the following indices
[1] = Object number in p0101[0]
[2] = Object number in p0101[1]
[3] = Object number in p0101[2]
[4] = Object number in p0101[3]
[5] = Object number in p0101[4]
[6] = Object number in p0101[5]
[7] = Object number in p0101[6]
[8] = Object number in p0101[7]
[9] = Object number in p0101[8]
[10] = Object number in p0101[9]
[11] = Object number in p0101[10]
[12] = Object number in p0101[11]
[13] = Object number in p0101[12]
[14] = Object number in p0101[13]
[15] = Object number in p0101[14]
[16] = Object number in p0101[15]
[17] = Object number in p0101[16]
[18] = Object number in p0101[17]
[19] = Object number in p0101[18]
[20] = Object number in p0101[19]
[21] = Object number in p0101[20]
[22] = Object number in p0101[21]
[23] = Object number in p0101[22]
[24] = Object number in p0101[23]

Dependency: Refer to: p0101, r7867, r7872

r7870[0...7] Configuration changes global / Config_chng global

CU_G130_DP, CU_G130_PN, CU_G150_DP, CU_G150_PN

Can be changed: -	**Calculated:** -	**Access level:** 4
Data type: Unsigned32	**Dynamic index:** -	**Func. diagram:** -
P-Group: -	**Units group:** -	**Unit selection:** -
Not for motor type: -	**Scaling:** -	**Expert list:** 1
Min	**Max**	**Factory setting**
-	-	-

Description: Displays the configuration changes of all of the drive objects in the complete unit.

Index:
[0] = Sum of the following indices
[1] = r7871[0] of a drive object
[2] = p0101 or r0102
[3] = PROFIBUS configuration (p0978)
[4] = DRIVE-CLiQ actual topology (r9900 or r9901)
[5] = DRIVE-CLiQ target topology (r9902 or r9903)
[6] = DRIVE-CLiQ ports (p0109)
[7] = OA applications

Dependency: Refer to: r7867, r7871

Note:
Index 0:
When changing one of the following indices, then the value in this index is incremented.
Index 1:
Drive object configuration. When changing r7871[0] on a drive object, the value in this index is incremented.
Index 2:
Drive object, configuration unit. When changing either p0101 or r0102, the value in this index is incremented.
Index 3:
PROFIBUS configuration unit. When changing p0978, the value in this index is incremented.
Index 4:
DRIVE-CLiQ actual topology. When changing either r9900 or r9901, the value in this index is incremented.

© Siemens AG 2012 All Rights Reserved

Index 5:
DRIVE-CLiQ target topology. When changing either p9902 or p9903, the value in this index is incremented.
Index 6:
DRIVE-CLiQ ports. When changing p0109, the value in this index is incremented.
Index 7:
OA applications. When changing OA applications, the value in this index is incremented.

r7871[0...10] Configuration changes drive object / Config_chng DO

B_INF	**Can be changed:** -	**Calculated:** -	**Access level:** 4
	Data type: Unsigned32	**Dynamic index:** -	**Func. diagram:** -
	P-Group: -	**Units group:** -	**Unit selection:** -
	Not for motor type: -	**Scaling:** -	**Expert list:** 1
	Min	**Max**	**Factory setting**
	-	-	-

Description: Displays the configuration changes on the drive object.

Index:
[0] = Sum of the following indices
[1] = p0010, p0107 or p0108
[2] = Drive object name (p0199)
[3] = Structure-relevant parameters (e.g. p0180)
[4] = BICO interconnections
[5] = Activate/de-activate drive object
[6] = Data backup required
[7] = Activate/de-activate component
[8] = Reference or changeover parameters (e.g. p2000)
[9] = Parameter count through Drive Control Chart (DCC)
[10] = p0107 or p0108

Dependency: Refer to: r7868, r7870

Note:
Re index 0:
When changing one of the following indices, then the value in this index is incremented.
Re index 1:
Drive object commissioning: When changing p0010, p0107 or p0108, the value in this index is incremented.
Re index 2:
Drive object name. When changing p0199, the value in this index is incremented.
Re index 3:
Drive object structure. When changing a parameter that is relevant for the structure (e.g. number of data sets), the value in this index is incremented.
Re index 4:
Drive object BICO interconnections. When changing r3977, the value in this index is incremented.
Re index 5:
Drive object activity: When changing p0105, the value in this index is incremented.
Re index 6:
Drive object, data save.
0: There are no parameter changes to save.
1: There are parameter changes to save.
Re index 7:
Drive object component activity: When changing either p0125 or p0145, the value in this index is incremented.
Re index 8:
Drive object changeover of units. When changing reference or changeover parameters (e.g. p2000, p0304), the value in this index is incremented.
Re index 9:
Drive object parameter count. When changing the number of parameters by loading Drive Control Chart (DCC), the value in this index is incremented.
Re index 10:
Drive object configuration. When changing either p0107 or p0108, the value in this index is incremented.

© Siemens AG 2012 All Rights Reserved

r7871[0...10] Configuration changes drive object / Config_chng DO

CU_G130_DP, CU_G130_PN, CU_G150_DP, CU_G150_PN

Can be changed: -	**Calculated:** -	**Access level:** 4
Data type: Unsigned32	**Dynamic index:** -	**Func. diagram:** -
P-Group: -	**Units group:** -	**Unit selection:** -
Not for motor type: -	**Scaling:** -	**Expert list:** 1
Min	**Max**	**Factory setting**
-	-	-

Description: Displays the configuration changes on the drive object.

Index:
[0] = Sum of the following indices
[1] = p0107 or p0108
[2] = Drive object name (p0199)
[3] = Structure-relevant parameters (e.g. p0180)
[4] = BICO interconnections
[5] = Activate/de-activate drive object
[6] = Data backup required
[7] = Reserved
[8] = Reference or changeover parameters (e.g. p2000)
[9] = Parameter count through Drive Control Chart (DCC)
[10] = p0107 or p0108

Dependency: Refer to: r7868, r7870

Note:
Re index 0:
When changing one of the following indices, then the value in this index is incremented.
Re index 1:
Drive object commissioning: When changing either p0107 or p0108, the value in this index is incremented.
Re index 2:
Drive object name. When changing p0199, the value in this index is incremented.
Re index 3:
Drive object structure. When changing a parameter that is relevant for the structure (e.g. number of data sets), the value in this index is incremented.
Re index 4:
Drive object BICO interconnections. When changing r3977, the value in this index is incremented.
Re index 5:
Drive object activity: When changing p0105, the value in this index is incremented.
Re index 6:
Drive object, data save.
0: There are no parameter changes to save.
1: There are parameter changes to save.
Re index 8:
Drive object changeover of units. When changing reference or changeover parameters (e.g. p2000, p0304), the value in this index is incremented.
Re index 9:
Drive object parameter count. When changing the number of parameters by loading Drive Control Chart (DCC), the value in this index is incremented.
Re index 10:
Drive object configuration. When changing either p0107 or p0108, the value in this index is incremented.

r7871[0...15] Configuration changes drive object / Config_chng DO

ENC

Can be changed: -	**Calculated:** -	**Access level:** 4
Data type: Unsigned32	**Dynamic index:** -	**Func. diagram:** -
P-Group: -	**Units group:** -	**Unit selection:** -
Not for motor type: -	**Scaling:** -	**Expert list:** 1
Min	**Max**	**Factory setting**
-	-	-

Description: Displays the configuration changes on the drive object.

© Siemens AG 2012 All Rights Reserved

Index:
[0] = Sum of the following indices
[1] = p0010, p0107 or p0108
[2] = Drive object name (p0199)
[3] = Structure-relevant parameters (e.g. p0180)
[4] = BICO interconnections
[5] = Activate/de-activate drive object
[6] = Data backup required
[7] = Activate/de-activate component
[8] = Reference or changeover parameters (e.g. p2000)
[9] = Parameter count through Drive Control Chart (DCC)
[10] = p0107 or p0108
[11] = p0530 or p0531
[12] = Reserved
[13] = Reserved
[14] = Reserved
[15] = Enc type (p0400)

Dependency:
Refer to: r7868, r7870

Note:
Re index 0:
When changing one of the following indices, then the value in this index is incremented.
Re index 1:
Drive object configuration. When changing p0010, p0107 or p0108, the value in this index is incremented.
Re index 2:
Drive object name. When changing p0199, the value in this index is incremented.
Re index 3:
Drive object structure. When changing a parameter that is relevant for the structure (e.g. number of data sets), the value in this index is incremented.
Re index 4:
Drive object BICO interconnections. When changing r3977, the value in this index is incremented.
Re index 6:
Drive object, data save.
0: There are no parameter changes to save.
1: There are parameter changes to save.
Re index 8:
Drive object changeover of units. When changing reference or changeover parameters (e.g. p2000, p0304 ...), the value in this index is incremented.
Re index 9:
Drive object parameter count. When changing the number of parameters by loading Drive Control Chart (DCC), the value in this index is incremented.
Re index 15:
Encoder configuration. When changing p0400, the value in this index is incremented.

r7871[0...10] Configuration changes drive object / Config_chng DO

HUB, TB30, TM150, TM31

Can be changed: -	**Calculated:** -	**Access level:** 4
Data type: Unsigned32	**Dynamic index:** -	**Func. diagram:** -
P-Group: -	**Units group:** -	**Unit selection:** -
Not for motor type: -	**Scaling:** -	**Expert list:** 1
Min	**Max**	**Factory setting**
-	-	-

Description:
Displays the configuration changes on the drive object.

Index:
[0] = Sum of the following indices
[1] = p0010, p0107 or p0108
[2] = Drive object name (p0199)
[3] = Structure-relevant parameters (e.g. p0180)
[4] = BICO interconnections
[5] = Activate/de-activate drive object
[6] = Data backup required
[7] = Reserved

© Siemens AG 2012 All Rights Reserved

[8] = Reference or changeover parameters (e.g. p2000)
[9] = Parameter count through Drive Control Chart (DCC)
[10] = p0107 or p0108

Dependency: Refer to: r7868, r7870

Note: Re index 0:

When changing one of the following indices, then the value in this index is incremented.

Re index 1:

Drive object commissioning: When changing p0010, p0107 or p0108, the value in this index is incremented.

Re index 2:

Drive object name. When changing p0199, the value in this index is incremented.

Re index 3:

Drive object structure. When changing a parameter that is relevant for the structure (e.g. number of data sets), the value in this index is incremented.

Re index 4:

Drive object BICO interconnections. When changing r3977, the value in this index is incremented.

Re index 5:

Drive object activity: When changing p0105, the value in this index is incremented.

Re index 6:

Drive object, data save.

0: There are no parameter changes to save.

1: There are parameter changes to save.

Re index 8:

Drive object changeover of units. When changing reference or changeover parameters (e.g. p2000, p0304), the value in this index is incremented.

Re index 9:

Drive object parameter count. When changing the number of parameters by loading Drive Control Chart (DCC), the value in this index is incremented.

Re index 10:

Drive object configuration. When changing either p0107 or p0108, the value in this index is incremented.

r7871[0...10] Configuration changes drive object / Config_chng DO

TM54F_MA, TM54F_SL

Can be changed: -	**Calculated:** -	**Access level:** 4
Data type: Unsigned32	**Dynamic index:** -	**Func. diagram:** -
P-Group: -	**Units group:** -	**Unit selection:** -
Not for motor type: -	**Scaling:** -	**Expert list:** 1
Min	**Max**	**Factory setting**
-	-	-

Description: Displays the configuration changes on the drive object.

Index: [0] = Sum of the following indices
[1] = p0010, p0107 or p0108
[2] = Drive object name (p0199)
[3] = Structure-relevant parameters (e.g. p0180)
[4] = BICO interconnections
[5] = Reserved
[6] = Data backup required
[7] = Reserved
[8] = Reference or changeover parameters (e.g. p2000)
[9] = Parameter count through Drive Control Chart (DCC)
[10] = p0107 or p0108

Dependency: Refer to: r7868, r7870

Note: Re index 0:

When changing one of the following indices, then the value in this index is incremented.

Re index 1:

Drive object commissioning: When changing p0010, p0107 or p0108, the value in this index is incremented.

© Siemens AG 2012 All Rights Reserved

Re index 2:

Drive object name. When changing p0199, the value in this index is incremented.

Re index 3:

Drive object structure. When changing a parameter that is relevant for the structure (e.g. number of data sets), the value in this index is incremented.

Re index 4:

Drive object BICO interconnections. When changing r3977, the value in this index is incremented.

Re index 6:

Drive object, data save.

0: There are no parameter changes to save.

1: There are parameter changes to save.

Re index 8:

Drive object changeover of units. When changing reference or changeover parameters (e.g. p2000, p0304), the value in this index is incremented.

Re index 9:

Drive object parameter count. When changing the number of parameters by loading Drive Control Chart (DCC), the value in this index is incremented.

Re index 10:

Drive object configuration. When changing either p0107 or p0108, the value in this index is incremented.

r7871[0...15] Configuration changes drive object / Config_chng DO

VECTOR_G	**Can be changed:** -	**Calculated:** -	**Access level:** 4
	Data type: Unsigned32	**Dynamic index:** -	**Func. diagram:** -
	P-Group: -	**Units group:** -	**Unit selection:** -
	Not for motor type: -	**Scaling:** -	**Expert list:** 1
	Min	**Max**	**Factory setting**
	-	-	-

Description: Displays the configuration changes on the drive object.

Index:
[0] = Sum of the following indices
[1] = p0010, p0107 or p0108
[2] = Drive object name (p0199)
[3] = Structure-relevant parameters (e.g. p0180)
[4] = BICO interconnections
[5] = Activate/de-activate drive object
[6] = Data backup required
[7] = Activate/de-activate component
[8] = Reference or changeover parameters (e.g. p2000)
[9] = Parameter count through Drive Control Chart (DCC)
[10] = p0107 or p0108
[11] = p0530 or p0531
[12] = Reserved
[13] = Reserved
[14] = Reserved
[15] = SERVO or VECTOR (e.g. p0300)

Dependency: Refer to: r7868, r7870

Note: Re index 0:

When changing one of the following indices, then the value in this index is incremented.

Re index 1:

Drive object commissioning: When changing p0010, p0107 or p0108, the value in this index is incremented.

Re index 2:

Drive object name. When changing p0199, the value in this index is incremented.

Re index 3:

Drive object structure. When changing a parameter that is relevant for the structure (e.g. number of data sets), the value in this index is incremented.

Re index 4:

Drive object BICO interconnections. When changing r3977, the value in this index is incremented.

© Siemens AG 2012 All Rights Reserved

Re index 5:
Drive object activity: When changing p0105, the value in this index is incremented.
Re index 6:
Drive object, data save.
0: There are no parameter changes to save.
1: There are parameter changes to save.
Re index 7:
Drive object component activity: When changing either p0125 or p0145, the value in this index is incremented.
Re index 8:
Drive object changeover of units. When changing reference or changeover parameters (e.g. p2000, p0304), the value in this index is incremented.
Re index 9:
Drive object parameter count. When changing the number of parameters by loading Drive Control Chart (DCC), the value in this index is incremented.
Re index 10:
Drive object configuration. When changing either p0107 or p0108, the value in this index is incremented.
Re index 11:
Drive object bearing. When changing p0530 or p0531, the value in this index is incremented.
Re index 15:
SERVO/VECTOR configuration. When changing p0300, p0301 or p0400, the value in this index is incremented.

r7872[0...3] Status changes drive object / Status_chng DO

All objects	**Can be changed:** -	**Calculated:** -	**Access level:** 4
	Data type: Unsigned32	**Dynamic index:** -	**Func. diagram:** -
	P-Group: -	**Units group:** -	**Unit selection:** -
	Not for motor type: -	**Scaling:** -	**Expert list:** 1
	Min	**Max**	**Factory setting**
	-	-	-

Description:
Displays the status changes on the drive object.
Index 0:
When changing one of the following indices, then the value in this index is incremented.
Index 1:
Drive object faults. When changing r0944, the value in this index is incremented.
Index 2:
Drive object alarms. When changing r2121, the value in this index is incremented.
Index 3:
Drive object safety messages. When changing r9744, the value in this index is incremented.

Index:
[0] = Sum of the following indices
[1] = Faults (r0944)
[2] = Alarms (r2121)
[3] = Safety messages (r9744)

Dependency:
Refer to: r7869

p7900[0...23] Drive objects priority / DO priority

CU_G130_DP, CU_G130_PN, CU_G150_DP, CU_G150_PN	**Can be changed:** U, T	**Calculated:** -	**Access level:** 4
	Data type: Unsigned16	**Dynamic index:** -	**Func. diagram:** -
	P-Group: -	**Units group:** -	**Unit selection:** -
	Not for motor type: -	**Scaling:** -	**Expert list:** 1
	Min	**Max**	**Factory setting**
	0	65535	0

Description:
Sets the priority for processing the existing drive objects in the system.
The parameter enables a free sequence to be set for processing the drive objects. For this purpose all the drive object numbers existing in the system have to be written in the desired sequence into the corresponding indices of the parameter. After re-booting this sequence will be effective without a plausibility check.

© Siemens AG 2012 All Rights Reserved

With the factory setting the following priorities regarding processing are applicable:

- The drive objects are pre-sorted according to their type as follows: CONTROL UNIT, INFEED, SERVO, VECTOR, TM, HUB, CU_LINK

- If they are of the same type, they are sorted in ascending order according to their drive object number, i.e. the lower the number, the higher the priority for processing.

Index:
[0] = Drive object number Control Unit
[1] = Drive object number object 1
[2] = Drive object number object 2
[3] = Drive object number object 3
[4] = Drive object number object 4
[5] = Drive object number object 5
[6] = Drive object number object 6
[7] = Drive object number object 7
[8] = Drive object number object 8
[9] = Drive object number object 9
[10] = Drive object number object 10
[11] = Drive object number object 11
[12] = Drive object number object 12
[13] = Drive object number object 13
[14] = Drive object number object 14
[15] = Drive object number object 15
[16] = Drive object number object 16
[17] = Drive object number object 17
[18] = Drive object number object 18
[19] = Drive object number object 19
[20] = Drive object number object 20
[21] = Drive object number object 21
[22] = Drive object number object 22
[23] = Drive object number object 23

Notice: This parameter may only be used by qualified service personnel.

Note: If the same drive object numbers are used and if the existing drive object numbers in the system are entered incompletely, the content of this parameter is ignored entirely. The behavior as with factory setting will then become effective.

r7901[0...43] Sampling times / t_sample

CU_G130_DP, CU_G130_PN, CU_G150_DP, CU_G150_PN

Can be changed: -	**Calculated:** -	**Access level:** 4
Data type: FloatingPoint32	**Dynamic index:** -	**Func. diagram:** -
P-Group: -	**Units group:** -	**Unit selection:** -
Not for motor type: -	**Scaling:** -	**Expert list:** 1
Min	**Max**	**Factory setting**
- [µs]	- [µs]	- [µs]

Description: Displays the sampling times currently present on the drive unit.

For r7901[x] = 0, the following applies:

The time slice is not active.

r7903 Hardware sampling times still assignable / HW t_samp free

CU_G130_DP, CU_G130_PN, CU_G150_DP, CU_G150_PN

Can be changed: -	**Calculated:** -	**Access level:** 3
Data type: Unsigned16	**Dynamic index:** -	**Func. diagram:** -
P-Group: -	**Units group:** -	**Unit selection:** -
Not for motor type: -	**Scaling:** -	**Expert list:** 1
Min	**Max**	**Factory setting**
-	-	-

Description: Displays the number of hardware sampling times that can still be assigned.

These free sampling times can be used by OA applications such as DCC (Drive Control Chart) or FBLOCKS (free function blocks).

Note: OA: Open Architecture

© Siemens AG 2012 All Rights Reserved

p8500[0...7] BI: Input signal bit-serially 0 / Input_sig bit 0

CU_G130_DP, CU_G130_PN, CU_G150_DP, CU_G150_PN	**Can be changed:** U, T	**Calculated:** -	**Access level:** 2
	Data type: Unsigned32 / Binary	**Dynamic index:** -	**Func. diagram:** -
	P-Group: -	**Units group:** -	**Unit selection:** -
	Not for motor type: -	**Scaling:** -	**Expert list:** 1
	Min	**Max**	**Factory setting**
	-	-	0

Description: Sets the signal source for bit-serial input signals.
These signals are available in binector output r8510.0 ... 7 for further interconnection.

Index:
[0] = To BO: r8510.0
[1] = To BO: r8510.1
[2] = To BO: r8510.2
[3] = To BO: r8510.3
[4] = To BO: r8510.4
[5] = To BO: r8510.5
[6] = To BO: r8510.6
[7] = To BO: r8510.7

Dependency: Refer to: r8510

p8501[0...21] BI: Input signal bit-serially 1 / Input_sig bit 1

CU_G130_DP, CU_G130_PN, CU_G150_DP, CU_G150_PN	**Can be changed:** U, T	**Calculated:** -	**Access level:** 2
	Data type: Unsigned32 / Binary	**Dynamic index:** -	**Func. diagram:** -
	P-Group: -	**Units group:** -	**Unit selection:** -
	Not for motor type: -	**Scaling:** -	**Expert list:** 1
	Min	**Max**	**Factory setting**
	-	-	0

Description: Sets the signal source for bit-serial input signals.
These signals are available in binector output r8511.0 ... 21 for further interconnection.

Index:
[0] = To BO: r8511.0
[1] = To BO: r8511.1
[2] = To BO: r8511.2
[3] = To BO: r8511.3
[4] = To BO: r8511.4
[5] = To BO: r8511.5
[6] = To BO: r8511.6
[7] = To BO: r8511.7
[8] = To BO: r8511.8
[9] = To BO: r8511.9
[10] = To BO: r8511.10
[11] = To BO: r8511.11
[12] = To BO: r8511.12
[13] = To BO: r8511.13
[14] = To BO: r8511.14
[15] = To BO: r8511.15
[16] = To BO: r8511.16
[17] = To BO: r8511.17
[18] = To BO: r8511.18
[19] = To BO: r8511.19
[20] = To BO: r8511.20
[21] = To BO: r8511.21

Dependency: Refer to: r8511

© Siemens AG 2012 All Rights Reserved

p8502 CI: Input signal word-serially 0 / Input_sig word 0

CU_G130_DP, CU_G130_PN, CU_G150_DP, CU_G150_PN	**Can be changed:** U, T	**Calculated:** -	**Access level:** 2
	Data type: Unsigned32 / Integer32	**Dynamic index:** -	**Func. diagram:** -
	P-Group: -	**Units group:** -	**Unit selection:** -
	Not for motor type: -	**Scaling:** PERCENT	**Expert list:** 1
	Min	**Max**	**Factory setting**
	-	-	0

Description: Sets the signal source for wordwise input signals.
This signal value is available in connector output r8512 for further interconnection.

Dependency: Refer to: r8512

p8503 CI: Input signal word-serially 1 / Input_sig word 1

CU_G130_DP, CU_G130_PN, CU_G150_DP, CU_G150_PN	**Can be changed:** U, T	**Calculated:** -	**Access level:** 2
	Data type: Unsigned32 / Integer32	**Dynamic index:** -	**Func. diagram:** -
	P-Group: -	**Units group:** -	**Unit selection:** -
	Not for motor type: -	**Scaling:** PERCENT	**Expert list:** 1
	Min	**Max**	**Factory setting**
	-	-	0

Description: Sets the signal source for wordwise input signals.
This signal value is available in connector output r8513 for further interconnection.

Dependency: Refer to: r8513

p8504 CI: Input signal word-serially 2 / Input_sig word 2

CU_G130_DP, CU_G130_PN, CU_G150_DP, CU_G150_PN	**Can be changed:** U, T	**Calculated:** -	**Access level:** 2
	Data type: Unsigned32 / Integer32	**Dynamic index:** -	**Func. diagram:** -
	P-Group: -	**Units group:** -	**Unit selection:** -
	Not for motor type: -	**Scaling:** PERCENT	**Expert list:** 1
	Min	**Max**	**Factory setting**
	-	-	0

Description: Sets the signal source for wordwise input signals.
This signal value is available in connector output r8514 for further interconnection.

Dependency: Refer to: r8514

p8505 CI: Input signal word-serially 3 / Input_sig word 3

CU_G130_DP, CU_G130_PN, CU_G150_DP, CU_G150_PN	**Can be changed:** U, T	**Calculated:** -	**Access level:** 2
	Data type: Unsigned32 / Integer32	**Dynamic index:** -	**Func. diagram:** -
	P-Group: -	**Units group:** -	**Unit selection:** -
	Not for motor type: -	**Scaling:** PERCENT	**Expert list:** 1
	Min	**Max**	**Factory setting**
	-	-	0

Description: Sets the signal source for wordwise input signals.
This signal value is available in connector output r8515 for further interconnection.

Dependency: Refer to: r8515

© Siemens AG 2012 All Rights Reserved

r8510.0...7 BO: Output signal bit-serially 0 / Outp_sig bit 0

CU_G130_DP, CU_G130_PN, CU_G150_DP, CU_G150_PN

Can be changed: -	**Calculated:** -	**Access level:** 2
Data type: Unsigned32	**Dynamic index:** -	**Func. diagram:** -
P-Group: -	**Units group:** -	**Unit selection:** -
Not for motor type: -	**Scaling:** -	**Expert list:** 1
Min	**Max**	**Factory setting**
-	-	-

Description: Display and binector output for the signal interconnected via binector input p8500[0...7].

Bit field:

Bit	Signal name	1 signal	0 signal	FP
00	From BI: p8500[0]	ON	OFF	-
01	From BI: p8500[1]	ON	OFF	-
02	From BI: p8500[2]	ON	OFF	-
03	From BI: p8500[3]	ON	OFF	-
04	From BI: p8500[4]	ON	OFF	-
05	From BI: p8500[5]	ON	OFF	-
06	From BI: p8500[6]	ON	OFF	-
07	From BI: p8500[7]	ON	OFF	-

Dependency: Refer to: p8500

r8511.0...21 BO: Output signal bit-serially 1 / Outp_sig bit 1

CU_G130_DP, CU_G130_PN, CU_G150_DP, CU_G150_PN

Can be changed: -	**Calculated:** -	**Access level:** 2
Data type: Unsigned32	**Dynamic index:** -	**Func. diagram:** -
P-Group: -	**Units group:** -	**Unit selection:** -
Not for motor type: -	**Scaling:** -	**Expert list:** 1
Min	**Max**	**Factory setting**
-	-	-

Description: Display and binector output for the signal interconnected via binector input p8501[0...21].

Bit field:

Bit	Signal name	1 signal	0 signal	FP
00	From BI: p8501[0]	ON	OFF	-
01	From BI: p8501[1]	ON	OFF	-
02	From BI: p8501[2]	ON	OFF	-
03	From BI: p8501[3]	ON	OFF	-
04	From BI: p8501[4]	ON	OFF	-
05	From BI: p8501[5]	ON	OFF	-
06	From BI: p8501[6]	ON	OFF	-
07	From BI: p8501[7]	ON	OFF	-
08	From BI: p8501[8]	ON	OFF	-
09	From BI: p8501[9]	ON	OFF	-
10	From BI: p8501[10]	ON	OFF	-
11	From BI: p8501[11]	ON	OFF	-
12	From BI: p8501[12]	ON	OFF	-
13	From BI: p8501[13]	ON	OFF	-
14	From BI: p8501[14]	ON	OFF	-
15	From BI: p8501[15]	ON	OFF	-
16	From BI: p8501[16]	ON	OFF	-
17	From BI: p8501[17]	ON	OFF	-
18	From BI: p8501[18]	ON	OFF	-
19	From BI: p8501[19]	ON	OFF	-
20	From BI: p8501[20]	ON	OFF	-
21	From BI: p8501[21]	ON	OFF	-

Dependency: Refer to: p8501

© Siemens AG 2012 All Rights Reserved

r8512 CO: Output signal wordwise 0 / Outp_sig word 0

CU_G130_DP, CU_G130_PN, CU_G150_DP, CU_G150_PN

Can be changed: -	**Calculated:** -	**Access level:** 2
Data type: FloatingPoint32	**Dynamic index:** -	**Func. diagram:** -
P-Group: -	**Units group:** -	**Unit selection:** -
Not for motor type: -	**Scaling:** PERCENT	**Expert list:** 1
Min	**Max**	**Factory setting**
- [%]	- [%]	- [%]

Description: Display and connector output for the signal interconnected via connector input p8502.

Dependency: Refer to: p8502

r8513 CO: Output signal wordwise 1 / Outp_sig word 1

CU_G130_DP, CU_G130_PN, CU_G150_DP, CU_G150_PN

Can be changed: -	**Calculated:** -	**Access level:** 2
Data type: FloatingPoint32	**Dynamic index:** -	**Func. diagram:** -
P-Group: -	**Units group:** -	**Unit selection:** -
Not for motor type: -	**Scaling:** PERCENT	**Expert list:** 1
Min	**Max**	**Factory setting**
- [%]	- [%]	- [%]

Description: Display and connector output for the signal interconnected via connector input p8503.

Dependency: Refer to: p8503

r8514 CO: Output signal wordwise 2 / Outp_sig word 2

CU_G130_DP, CU_G130_PN, CU_G150_DP, CU_G150_PN

Can be changed: -	**Calculated:** -	**Access level:** 2
Data type: FloatingPoint32	**Dynamic index:** -	**Func. diagram:** -
P-Group: -	**Units group:** -	**Unit selection:** -
Not for motor type: -	**Scaling:** PERCENT	**Expert list:** 1
Min	**Max**	**Factory setting**
- [%]	- [%]	- [%]

Description: Display and connector output for the signal interconnected via connector input p8504.

Dependency: Refer to: p8504

r8515 CO: Output signal wordwise 3 / Outp_sig word 3

CU_G130_DP, CU_G130_PN, CU_G150_DP, CU_G150_PN

Can be changed: -	**Calculated:** -	**Access level:** 2
Data type: FloatingPoint32	**Dynamic index:** -	**Func. diagram:** -
P-Group: -	**Units group:** -	**Unit selection:** -
Not for motor type: -	**Scaling:** PERCENT	**Expert list:** 1
Min	**Max**	**Factory setting**
- [%]	- [%]	- [%]

Description: Display and connector output for the signal interconnected via connector input p8505.

Dependency: Refer to: p8505

p8550 AOP LOCAL/REMOTE / AOP LOCAL/REMOTE

CU_G130_DP, CU_G130_PN, CU_G150_DP, CU_G150_PN

Can be changed: U, T	**Calculated:** -	**Access level:** 4
Data type: Unsigned32	**Dynamic index:** -	**Func. diagram:** -
P-Group: -	**Units group:** -	**Unit selection:** -
Not for motor type: -	**Scaling:** -	**Expert list:** 1
Min	**Max**	**Factory setting**
-	-	0000 0000 0000 1001 bin

Description: Setting for saving the actual configuration of the Advanced Operator Panel (AOP).

Bit field:

Bit	Signal name	1 signal	0 signal	FP
00	LOCAL save	Yes	No	-
01	Start in LOCAL	Yes	No	-

© Siemens AG 2012 All Rights Reserved

02	Change in oper.	Yes	No	-
03	OFF acts like OFF1	Yes	No	-
04	OFF acts like OFF2	Yes	No	-
05	OFF acts like OFF3	Yes	No	-
06	Reserved	Yes	No	-
07	CW/CCW active	Yes	No	-
08	Jog active	Yes	No	-
09	Save speed setpoint	Yes	No	-
14	Inhibit operation	Yes	No	-
15	Inhibit parameterization	Yes	No	-

r8570[0...39] Macro drive object / Macro DO

B_INF, CU_G130_DP, CU_G130_PN, CU_G150_DP, CU_G150_PN, TM150, TM31, VECTOR_G

Can be changed: - **Calculated:** - **Access level:** 1
Data type: Unsigned32 **Dynamic index:** - **Func. diagram:** -
P-Group: - **Units group:** - **Unit selection:** -
Not for motor type: - **Scaling:** - **Expert list:** 0

Min	Max	Factory setting
-	-	-

Description: Displays the macro file saved in the appropriate directory on the memory card/device memory.
Dependency: Refer to: p0015
Note: For a value = 9999999, the following applies: The read operation is still running.

r8571[0...39] Macro Binector Input (BI) / Macro BI

B_INF, VECTOR_G

Can be changed: - **Calculated:** - **Access level:** 1
Data type: Unsigned32 **Dynamic index:** - **Func. diagram:** -
P-Group: - **Units group:** - **Unit selection:** -
Not for motor type: - **Scaling:** - **Expert list:** 0

Min	Max	Factory setting
-	-	-

Description: Displays the ACX file saved in the appropriate directory in the non-volatile memory.
Dependency: Refer to: p0700
Note: For a value = 9999999, the following applies: The read operation is still running.

r8572[0...39] Macro Connector Inputs (CI) for speed setpoints / Macro CI n_set

B_INF, VECTOR_G

Can be changed: - **Calculated:** - **Access level:** 1
Data type: Unsigned32 **Dynamic index:** - **Func. diagram:** -
P-Group: - **Units group:** - **Unit selection:** -
Not for motor type: - **Scaling:** - **Expert list:** 0

Min	Max	Factory setting
-	-	-

Description: Displays the ACX file saved in the appropriate directory in the non-volatile memory.
Dependency: Refer to: p1000
Note: For a value = 9999999, the following applies: The read operation is still running.

r8573[0...39] Macro Connector Inputs (CI) for torque setpoints / Macro CI M_set

B_INF, VECTOR_G

Can be changed: - **Calculated:** - **Access level:** 1
Data type: Unsigned32 **Dynamic index:** - **Func. diagram:** -
P-Group: - **Units group:** - **Unit selection:** -
Not for motor type: - **Scaling:** - **Expert list:** 0

Min	Max	Factory setting
-	-	-

Description: Displays the ACX file saved in the appropriate directory in the non-volatile memory.

© Siemens AG 2012 All Rights Reserved

Dependency: Refer to: p1500
Note: For a value = 9999999, the following applies: The read operation is still running.

r8585 Macro execution actual / Macro executed

B_INF, CU_G130_DP, CU_G130_PN, CU_G150_DP, CU_G150_PN, TB30, TM150, TM31, VECTOR_G

Can be changed: -	**Calculated:** -	**Access level:** 1
Data type: Unsigned16	**Dynamic index:** -	**Func. diagram:** -
P-Group: -	**Units group:** -	**Unit selection:** -
Not for motor type: -	**Scaling:** -	**Expert list:** 0

Min	Max	Factory setting
-	-	-

Description: Displays the macro currently being executed on the drive object.
Dependency: Refer to: p0015, p0700, p1000, p1500, r8570, r8571, r8572, r8573

r8600 CAN device type / Device type

CU_G130_DP (CAN), CU_G130_PN (CAN), CU_G150_DP (CAN), CU_G150_PN (CAN)

Can be changed: -	**Calculated:** -	**Access level:** 3
Data type: Unsigned32	**Dynamic index:** -	**Func. diagram:** -
P-Group: Communications	**Units group:** -	**Unit selection:** -
Not for motor type: -	**Scaling:** -	**Expert list:** 1

Min	Max	Factory setting
-	-	-

Description: Displays all of the devices connected to the CAN bus after run-up.
r8600
= 00000000 hex: No drive recognized.
= FFFF0192 hex: Several drives - drive 1 is an Active Line Module, servo drive or vector drive
= FFFF0191 hex: Several drives - 1st drive is a Terminal Module
= 02010192 hex: 1 Vector drive
= 00020192 hex: 1 Servo drive
= 01000192 hex: 1 Active Line Module
= 00080191 hex: 1 Terminal Module
Note: Corresponds to the CANopen object 1000 hex.
For each detected drive, the device type is displayed in object 67FF hex + 800 hex * x (x: Drive number 0 ... 7).

r8601 CAN error register / Error register

CU_G130_DP (CAN), CU_G130_PN (CAN), CU_G150_DP (CAN), CU_G150_PN (CAN)

Can be changed: -	**Calculated:** -	**Access level:** 3
Data type: Unsigned8	**Dynamic index:** -	**Func. diagram:** -
P-Group: Communications	**Units group:** -	**Unit selection:** -
Not for motor type: -	**Scaling:** -	**Expert list:** 1

Min	Max	Factory setting
-	-	-

Description: Displays the error register for CANopen.
Bit 0: Generic error
0 signal: No error present.
1 signal: Generic error present.
Bit 1 ... 3: Not supported (always a 0 signal)
Bit 4: Communications error
0 signal: There is no message in the range 8700 ... 8799.
1 signal: There is at least one message (fault or alarm) in the range 8700 ... 8799.

© Siemens AG 2012 All Rights Reserved

Bit 5 ... 6: Not supported (always a 0 signal)
Bit 7:; Fault outside the range 8700 ... 8799
0 signal: There is no fault outside the range 8700 ... 8799.
1 signal: There is at least one fault outside the range 8700 ... 8799.

Note: Corresponds to the CANopen object 1001 hex.

p8602 CAN SYNC object / SYNC object

CU_G130_DP (CAN), CU_G130_PN (CAN), CU_G150_DP (CAN), CU_G150_PN (CAN)

Can be changed: T	**Calculated:** -	**Access level:** 3
Data type: Unsigned32	**Dynamic index:** -	**Func. diagram:** -
P-Group: Communications	**Units group:** -	**Unit selection:** -
Not for motor type: -	**Scaling:** -	**Expert list:** 1

Min	Max	Factory setting
0000 hex	FFFF FFFF hex	0080 hex

Description: Sets the SYNC object parameter for the following CANopen objects:
- 1005 hex: COB-ID

Note: SINAMICS operates as SYNC load.
COB-ID: CAN object identification

p8603 CAN COB-ID Emergency Message / COB-ID EMCY Msg

CU_G130_DP (CAN), CU_G130_PN (CAN), CU_G150_DP (CAN), CU_G150_PN (CAN)

Can be changed: T	**Calculated:** -	**Access level:** 3
Data type: Unsigned32	**Dynamic index:** -	**Func. diagram:** -
P-Group: Communications	**Units group:** -	**Unit selection:** -
Not for motor type: -	**Scaling:** -	**Expert list:** 1

Min	Max	Factory setting
0000 hex	FFFF FFFF hex	0000 hex

Description: Sets the COB-ID for the emergency message (error telegram).
It corresponds to the CANopen objects:
- 1014 hex: COB-ID

Note: If, when downloading, the pre-set value 0 is downloaded, then the CANopen pre-set value 80 hex + Node-ID is automatically set.
Online, the value 0 is rejected as, according to the CANopen Standard, COB-ID 0 is not permitted here.
The changeover of the node ID using the hardware switch at the Control Unit or per software has no effect on the COB-ID EMCY. The saved value remains effective.

p8604[0...1] CAN node guarding / Node guarding

CU_G130_DP (CAN), CU_G130_PN (CAN), CU_G150_DP (CAN), CU_G150_PN (CAN)

Can be changed: T	**Calculated:** -	**Access level:** 3
Data type: Unsigned16	**Dynamic index:** -	**Func. diagram:** -
P-Group: -	**Units group:** -	**Unit selection:** -
Not for motor type: -	**Scaling:** -	**Expert list:** 1

Min	Max	Factory setting
0	65535	0

Description: Sets the node guarding parameter for the following CANopen objects:
- 100C hex: Guard Time
- 100D hex: Life Time Factor

The life time is derived by multiplying guard time by the life time factor.

Index: [0] = Time interval [ms] for new node guarding telegram
[1] = Factor for failure of the node guarding telegram

© Siemens AG 2012 All Rights Reserved

Dependency: Only adjustable if heartbeat time = 0 (heartbeat is disabled).
Refer to: p8606

Note: For p8604[0] = 0 and/or p8604[1] = 0, the node guarding protocol is not used.
Either node guarding or heartbeat can be used.

p8606 CAN Producer Heartbeat Time / Prod Heartb Time

CU_G130_DP (CAN), CU_G130_PN (CAN), CU_G150_DP (CAN), CU_G150_PN (CAN)

Can be changed: T	**Calculated:** -	**Access level:** 3
Data type: Unsigned16	**Dynamic index:** -	**Func. diagram:** -
P-Group: -	**Units group:** -	**Unit selection:** -
Not for motor type: -	**Scaling:** -	**Expert list:** 1

Min	Max	Factory setting
0 [ms]	65535 [ms]	0 [ms]

Description: Sets the time [ms] to cyclically send heartbeat telegrams.
The smallest cycle time is 100 ms.
When a 0 is written, then heartbeat telegrams are not sent.

Dependency: Only adjustable if guard time = 0 (node guarding disabled).
Refer to: p8604

Note: Corresponds to the CANopen object 1017 hex.
Either node guarding or heartbeat can be used.

r8607[0...3] CAN Identity Object / Identity object

CU_G130_DP (CAN), CU_G130_PN (CAN), CU_G150_DP (CAN), CU_G150_PN (CAN)

Can be changed: -	**Calculated:** -	**Access level:** 3
Data type: Unsigned32	**Dynamic index:** -	**Func. diagram:** -
P-Group: Communications	**Units group:** -	**Unit selection:** -
Not for motor type: -	**Scaling:** -	**Expert list:** 1

Min	Max	Factory setting
-	-	-

Description: General device information display.

Index:
[0] = Vendor ID
[1] = Product code
[2] = Revision number
[3] = Serial number

Note: Corresponds to the CANopen object 1018 hex.
Re index 3:
The SINAMICS serial number comprises 60 bits. Of these bits, the following are displayed in this index:
Bits 0 ... 19: Consecutive number
Bits 20 ... 23: Production ID
- 0 hex: Development
- 1 hex: P1 unique number
- 2 hex: P2 unique number
- 3 hex: WA unique number
- 9 hex: Pattern
- F hex: All others

Bits 24 ... 27: Month of manufacture (0 means January, B means December)
Bits 28 ... 31: Year of manufacture (0 means 2002)

© Siemens AG 2012 All Rights Reserved

p8608[0...1] CAN Clear Bus Off Error / Clear bus off err

CU_G130_DP (CAN), CU_G130_PN (CAN), CU_G150_DP (CAN), CU_G150_PN (CAN)

Can be changed: U, T	**Calculated:** -	**Access level:** 3
Data type: Integer16	**Dynamic index:** -	**Func. diagram:** -
P-Group: -	**Units group:** -	**Unit selection:** -
Not for motor type: -	**Scaling:** -	**Expert list:** 1

Min	Max	Factory setting
0	1	0

Description: As a result of a Bus Off error, the CAN controller is set into the initialization state.

Index 0:

The CAN controller is manually started after resolving the cause of the error with p8608[0] = 1.

Index 1:

The automatic CAN bus start function is activated using p8608[1] = 1.

At 2 second intervals, the CAN controller is automatically restarted until the cause of the error has been resolved and a CAN connection has been established.

Value:
0: Inactive
1: Start CAN controller

Index:
[0] = Manual controller start function
[1] = Activating the automatic controller start function

Note: Re index 0:

This parameter is automatically reset to 0 after start.

p8609[0...1] CAN Error Behavior / Error behavior

CU_G130_DP (CAN), CU_G130_PN (CAN), CU_G150_DP (CAN), CU_G150_PN (CAN)

Can be changed: T	**Calculated:** -	**Access level:** 3
Data type: Integer16	**Dynamic index:** -	**Func. diagram:** -
P-Group: -	**Units group:** -	**Unit selection:** -
Not for motor type: -	**Scaling:** -	**Expert list:** 1

Min	Max	Factory setting
0	2	1

Description: Sets the behavior of the CAN node referred to the communications error or equipment fault.

Value:
0: Pre-operational
1: No change
2: Stopped

Index:
[0] = Behavior for communication errors
[1] = Behavior for device faults

Note: Corresponds to the CANopen object 1029 hex.

r8610[0...1] CAN First Server SDO / First server SDO

CU_G130_DP (CAN), CU_G130_PN (CAN), CU_G150_DP (CAN), CU_G150_PN (CAN)

Can be changed: -	**Calculated:** -	**Access level:** 3
Data type: Unsigned32	**Dynamic index:** -	**Func. diagram:** -
P-Group: Communications	**Units group:** -	**Unit selection:** -
Not for motor type: -	**Scaling:** -	**Expert list:** 1

Min	Max	Factory setting
-	-	-

Description: Displays the identifier (client/server and server/client) of the SDO channel.

Index:
[0] = Displays the COB ID from client to server
[1] = Displays the COB ID from server to client

© Siemens AG 2012 All Rights Reserved

Note: Corresponds to the CANopen object 1200 hex.
SDO: Service Data Object

p8611[0...82] CAN Pre-defined Error Field / Pre_def err field

CU_G130_DP (CAN), CU_G130_PN (CAN), CU_G150_DP (CAN), CU_G150_PN (CAN)	**Can be changed:** U, T	**Calculated:** -	**Access level:** 3
	Data type: Unsigned32	**Dynamic index:** -	**Func. diagram:** -
	P-Group: -	**Units group:** -	**Unit selection:** -
	Not for motor type: -	**Scaling:** -	**Expert list:** 1

Min	Max	Factory setting
0000 hex	FFFF 1000 hex	0000 hex

Description: Displays the Pre-defined Error Field of the CAN node.

It includes the number of all errors that have occurred, the number of errors that have occurred for each drive and the errors according to their history.

The first 16 bits represent the CANopen error code and the second 16 bits the SINAMICS error code.

Index 1 has the same structure - however, the drive object ID is in the second 16 bits instead of the SINAMICS error code.

CANopen error code:

0000 hex: No error present

8110 hex: Alarm A08751 present

8120 hex: Alarm A08752 present

8130 hex: Alarm A08700(F) with alarm value = 2 present

1000 hex: Generic error 1 present (there is at least one fault outside the range 8700 ... 8799)

1001 hex: Generic error 2 present (there is at least one alarm in the range 8700 ... 8799 with the exception of A08751, A08752, A08700)

All drive objects are acknowledged by writing the value 0 to the index 0. As soon as a fault has been acknowledged or an alarm cleared, then it is also cleared from the fault list.

Index:
[0] = Number of all faults in the drive unit
[1] = Most recent drive number / fault number
[2] = Number of faults drive 1
[3] = Fault 1/ drive 1
[4] = Fault 2/ drive 1
[5] = Fault 3/ drive 1
[6] = Fault 4/ drive 1
[7] = Fault 5/ drive 1
[8] = Fault 6/ drive 1
[9] = Fault 7/ drive 1
[10] = Fault 8/ drive 1
[11] = Number of faults drive 2
[12] = Fault 1/ drive 2
[13] = Fault 2/ drive 2
[14] = Fault 3/ drive 2
[15] = Fault 4/ drive 2
[16] = Fault 5/ drive 2
[17] = Fault 6/ drive 2
[18] = Fault 7/ drive 2
[19] = Fault 8/ drive 2
[20] = Number of faults drive 3
[21] = Fault 1/ drive 3
[22] = Fault 2/ drive 3
[23] = Fault 3/ drive 3
[24] = Fault 4/ drive 3
[25] = Fault 5/ drive 3
[26] = Fault 6/ drive 3
[27] = Fault 7/ drive 3
[28] = Fault 8/ drive 3
[29] = Number of faults drive 4
[30] = Fault 1/ drive 4

© Siemens AG 2012 All Rights Reserved

[31] = Fault 2/ drive 4
[32] = Fault 3/ drive 4
[33] = Fault 4/ drive 4
[34] = Fault 5/ drive 4
[35] = Fault 6/ drive 4
[36] = Fault 7/ drive 4
[37] = Fault 8/ drive 4
[38] = Number of faults drive 5
[39] = Fault 1/ drive 5
[40] = Fault 2/ drive 5
[41] = Fault 3/ drive 5
[42] = Fault 4/ drive 5
[43] = Fault 5/ drive 5
[44] = Fault 6/ drive 5
[45] = Fault 7/ drive 5
[46] = Fault 8/ drive 5
[47] = Number of faults drive 6
[48] = Fault 1/ drive 6
[49] = Fault 2/ drive 6
[50] = Fault 3/ drive 6
[51] = Fault 4/ drive 6
[52] = Fault 5/ drive 6
[53] = Fault 6/ drive 6
[54] = Fault 7/ drive 6
[55] = Fault 8/ drive 6
[56] = Number of faults drive 7
[57] = Fault 1/ drive 7
[58] = Fault 2/ drive 7
[59] = Fault 3/ drive 7
[60] = Fault 4/ drive 7
[61] = Fault 5/ drive 7
[62] = Fault 6/ drive 7
[63] = Fault 7/ drive 7
[64] = Fault 8/ drive 7
[65] = Number of faults drive 8
[66] = Fault 1/ drive 8
[67] = Fault 2/ drive 8
[68] = Fault 3/ drive 8
[69] = Fault 4/ drive 8
[70] = Fault 5/ drive 8
[71] = Fault 6/ drive 8
[72] = Fault 7/ drive 8
[73] = Fault 8/ drive 8
[74] = Number of faults Control Unit
[75] = Fault 1/Control Unit
[76] = Fault 2/Control Unit
[77] = Fault 3/Control Unit
[78] = Fault 4/Control Unit
[79] = Fault 5/Control Unit
[80] = Fault 6/Control Unit
[81] = Fault 7/Control Unit
[82] = Fault 8/Control Unit

Note: Corresponds to the CANopen object 1003 hex.

© Siemens AG 2012 All Rights Reserved

p8620 CAN Node-ID / Node ID

CU_G130_DP (CAN), CU_G130_PN (CAN), CU_G150_DP (CAN), CU_G150_PN (CAN)

Can be changed: T	**Calculated:** -	**Access level:** 2
Data type: Unsigned8	**Dynamic index:** -	**Func. diagram:** -
P-Group: -	**Units group:** -	**Unit selection:** -
Not for motor type: -	**Scaling:** -	**Expert list:** 1

Min	Max	Factory setting
1	127	126

Description:
Display or setting of the CANopen Node ID.
The Node ID can be set as follows:
1) Using the address switch on the Control Unit.
--> p8620 can then only be read and displays the selected Node ID.
--> A change only becomes effective after a POWER ON.
--> CANopen Node ID and PROFIBUS address are identical.
2) Using p8620
--> Only if address 0 is set using the address switch.
--> the Node ID is set as standard to 126.
--> A change only becomes effective after save and POWER ON.

Dependency:
Refer to: r8621

Note:
Every node ID change only becomes effective after a POWER ON.
The active node ID is displayed in r8621.
The parameter is not influenced by setting the factory setting.
It is only possible to independently set CANopen node ID and the PROFIBUS address using p0918 and p8620 (prerequisite: the address 0 is set for the address switch).

r8621 CAN Node-ID active / Node ID active

CU_G130_DP (CAN), CU_G130_PN (CAN), CU_G150_DP (CAN), CU_G150_PN (CAN)

Can be changed: -	**Calculated:** -	**Access level:** 3
Data type: Unsigned8	**Dynamic index:** -	**Func. diagram:** -
P-Group: Communications	**Units group:** -	**Unit selection:** -
Not for motor type: -	**Scaling:** -	**Expert list:** 1

Min	Max	Factory setting
-	-	-

Description:
Displays the active CANopen Node ID.

Dependency:
Refer to: p8620

p8622 CAN bit rate / Bit rate

CU_G130_DP (CAN), CU_G130_PN (CAN), CU_G150_DP (CAN), CU_G150_PN (CAN)

Can be changed: T	**Calculated:** -	**Access level:** 3
Data type: Integer16	**Dynamic index:** -	**Func. diagram:** -
P-Group: -	**Units group:** -	**Unit selection:** -
Not for motor type: -	**Scaling:** -	**Expert list:** 1

Min	Max	Factory setting
0	7	6

Description:
Setting the bit rate for the CAN bus.
The appropriate bit timings are selected that are defined in p8623 in the associated sub-index.
Example:
Bit rate = 20 kbit/s --> p8622 = 6 --> associated bit timing is in p8623[6].

© Siemens AG 2012 All Rights Reserved

Value:
0: 1 Mbit/s
1: 800 kbit/s
2: 500 kbit/s
3: 250 kbit/s
4: 125 kbit/s
5: 50 kbit/s
6: 20 kbit/s
7: 10 kbit/s

Dependency: Refer to: p8623

Note: The parameter is not influenced by setting the factory setting.

p8623[0...7] CAN Bit Timing selection / Bit timing select

CU_G130_DP (CAN), CU_G130_PN (CAN), CU_G150_DP (CAN), CU_G150_PN (CAN)

Can be changed: T	**Calculated:** -	**Access level:** 3
Data type: Unsigned32	**Dynamic index:** -	**Func. diagram:** -
P-Group: -	**Units group:** -	**Unit selection:** -
Not for motor type: -	**Scaling:** -	**Expert list:** 1

Min	Max	Factory setting
0000 hex	000F 7FFF hex	[0] 1405 hex
		[1] 1605 hex
		[2] 1C05 hex
		[3] 1C0B hex
		[4] 1C17 hex
		[5] 1C3B hex
		[6] 0002 1C15 hex
		[7] 0004 1C2B hex

Description:
Sets the bit timing for the C_CAN controller to the associated and selected bit rate (p8622).
Bits are distributed to the following parameters of the C_CAN controller in p8623[0...7]:
Bit 0 ... 5: BRP (Baud Rate Prescaler)
Bit 6 ... 7: SJW (Synchronization Jump Width)
Bit 8 ... 11: TSEG1 (Time Segment 1, before the sampling point)
Bit 12 ... 14: TSEG2 (Time Segment 2, after the sampling point)
Bit 15: Reserved
Bit 16 ... 19: BRPE (Baud Rate Prescaler Extension)
Bit 20 ... 31: Reserved
Example:
Bit rate = 20 kbit/s --> p8622 = 6 --> associated bit timing is in p8623[6] --> 0001 2FB6

Recommend.: Use the factory setting when setting the bit timing.

Index:
[0] = 1 Mbit/s
[1] = 800 kbit/s
[2] = 500 kbit/s
[3] = 250 kbit/s
[4] = 125 kbit/s
[5] = 50 kbit/s
[6] = 20 kbit/s
[7] = 10 kbit/s

Dependency: Refer to: p8622

Note: The parameter is not influenced by setting the factory setting.

© Siemens AG 2012 All Rights Reserved

p8630[0...2] CAN virtual objects / Virtual objects

CU_G130_DP (CAN), CU_G130_PN (CAN), CU_G150_DP (CAN), CU_G150_PN (CAN)

Can be changed: U, T	**Calculated:** -	**Access level:** 3
Data type: Unsigned16	**Dynamic index:** -	**Func. diagram:** -
P-Group: Communications	**Units group:** -	**Unit selection:** -
Not for motor type: -	**Scaling:** -	**Expert list:** 1

Min	Max	Factory setting
0	65535	0

Description: Sets the drive object selection (index 0), the sub-index area (index 1) and the parameter area (index 2) when using virtual objects.

This means that it is possible to access all SINAMICS parameters via CAN.

Index 0 (drive object number):

0: Not possible to access virtual CANopen objects

1: Device

2 ... 65535: drive object number of drive 1 ... 8

Index 1 (sub-index area):

0: 0 ... 255

1: 256 ... 511

2: 512 ... 767

3: 768 ... 1023

Index 2 (parameter area):

0: 1 ... 9999

1: 10000 ... 19999

2: 20000 ... 29999

3: 30000 ... 39999

Index: [0] = Drive object number
[1] = Sub-index range
[2] = Parameter range

p8641 CAN Abort Connection Option Code / Abort con opt code

VECTOR_G (CAN)

Can be changed: T	**Calculated:** -	**Access level:** 3
Data type: Integer16	**Dynamic index:** -	**Func. diagram:** -
P-Group: -	**Units group:** -	**Unit selection:** -
Not for motor type: -	**Scaling:** -	**Expert list:** 1

Min	Max	Factory setting
0	3	3

Description: Sets the drive behavior if a CAN communication error occurs.

Value:
0: No response
1: OFF1
2: OFF2
3: OFF3

Dependency: Refer to: F08700

© Siemens AG 2012 All Rights Reserved

r8680[0...36] CAN Diagnosis Hardware / Diagnostics HW

CU_G130_DP (CAN), CU_G130_PN (CAN), CU_G150_DP (CAN), CU_G150_PN (CAN)	**Can be changed:** -	**Calculated:** -	**Access level:** 3
	Data type: Unsigned16	**Dynamic index:** -	**Func. diagram:** -
	P-Group: Communications	**Units group:** -	**Unit selection:** -
	Not for motor type: -	**Scaling:** -	**Expert list:** 1

Min	Max	Factory setting
-	-	-

Description: Displays the register of the CAN controller C_CAN:
Register, Message Interface Register and Message Handler Register - referred to the CAN protocol.

Index:
[0] = Control register
[1] = Status register
[2] = Error counter
[3] = Bit timing register
[4] = Interrupt register
[5] = Test register
[6] = Baud rate prescaler extension register
[7] = Interface 1 command request register
[8] = Interface 1 command mask register
[9] = Interface 1 mask 1 register
[10] = Interface 1 mask 2 register
[11] = Interface 1 arbitration 1 register
[12] = Interface 1 arbitration 2 register
[13] = Interface 1 message control register
[14] = Interface 1 data A1 register
[15] = Interface 1 data A2 register
[16] = Interface 1 data B1 register
[17] = Interface 1 data B2 register
[18] = Interface 2 command request register
[19] = Interface 2 command mask register
[20] = Interface 2 mask 1 register
[21] = Interface 2 mask 2 register
[22] = Interface 2 arbitration 1 register
[23] = Interface 2 arbitration 2 register
[24] = Interface 2 message control register
[25] = Interface 2 data A1 register
[26] = Interface 2 data A2 register
[27] = Interface 2 data B1 register
[28] = Interface 2 data B2 register
[29] = Transmission request 1 register
[30] = Transmission request 2 register
[31] = New data 1 register
[32] = New data 2 register
[33] = Interrupt pending 1 register
[34] = Interrupt pending 2 register
[35] = Message valid 1 register
[36] = Message valid 2 register

Note: A description of the individual registers of the C_CAN controller can be taken from "C_CAN User's Manual".

© Siemens AG 2012 All Rights Reserved

p8684 CAN NMT state after booting / NMT state aft boot

CU_G130_DP (CAN), CU_G130_PN (CAN), CU_G150_DP (CAN), CU_G150_PN (CAN)	**Can be changed:** T	**Calculated:** -	**Access level:** 3
	Data type: Integer16	**Dynamic index:** -	**Func. diagram:** -
	P-Group: -	**Units group:** -	**Unit selection:** -
	Not for motor type: -	**Scaling:** -	**Expert list:** 1

Min	Max	Factory setting
4	127	127

Description: Sets the CANopen NMT state that is effective after booting.

Value:
4: Stopped
5: Operational
127: Pre-operational

Dependency: Refer to: p8685

Note: Booting in the NMT state pre-operational corresponds to the CANopen standard

p8685 CAN NMT states / NMT states

CU_G130_DP (CAN), CU_G130_PN (CAN), CU_G150_DP (CAN), CU_G150_PN (CAN)	**Can be changed:** U, T	**Calculated:** -	**Access level:** 3
	Data type: Integer16	**Dynamic index:** -	**Func. diagram:** -
	P-Group: Communications	**Units group:** -	**Unit selection:** -
	Not for motor type: -	**Scaling:** -	**Expert list:** 1

Min	Max	Factory setting
0	129	127

Description: Sets and displays the CANopen NMT state.

Value:
0: Initializing
4: Stopped
5: Operational
127: Pre-operational
128: Reset node
129: Reset Communication

Note: The value 0 (initialization) is only displayed and cannot be set.

p8699 CAN: RPDO monitoring time / RPDO t_monit

CU_G130_DP (CAN), CU_G130_PN (CAN), CU_G150_DP (CAN), CU_G150_PN (CAN)	**Can be changed:** U, T	**Calculated:** -	**Access level:** 3
	Data type: FloatingPoint32	**Dynamic index:** -	**Func. diagram:** -
	P-Group: Communications	**Units group:** -	**Unit selection:** -
	Not for motor type: -	**Scaling:** -	**Expert list:** 1

Min	Max	Factory setting
0 [ms]	65535000 [ms]	0 [ms]

Description: Sets the monitoring time to monitor the process data received via the CAN bus.
A value that is not a multiple integer of CANopen (p8848) is rounded-off.
If no process data is received within this time, fault F08702 is output.

Dependency: Refer to: p8848
Refer to: F08702

Note: 0: The monitoring is de-activated.

© Siemens AG 2012 All Rights Reserved

p8700[0...1] CAN Receive PDO 1 / Receive PDO 1

VECTOR_G (CAN)

Can be changed: C1(3), T	**Calculated:** -	**Access level:** 3
Data type: Unsigned32	**Dynamic index:** -	**Func. diagram:** 9204, 9206
P-Group: Communications	**Units group:** -	**Unit selection:** -
Not for motor type: -	**Scaling:** -	**Expert list:** 1
Min	**Max**	**Factory setting**
0000 hex	8000 06DF hex	[0] 8000 06DF hex [1] 00FE hex

Description: Sets the communication parameters for CANopen Receive Process Data Object 1 (RPDO 1).

Index: [0] = PDO COB-ID
[1] = PDO transmission type

Dependency: A valid COB-ID can only be set for the available (existing) channel.
Refer to: p8740, p8741

Note: Corresponds to the CANopen object 1400 hex + 40 hex * x (x: Drive number 0 ... 7).
Transmission types 0, 1, FE and FF can be set.
PDO: Process Data Object

p8701[0...1] CAN Receive PDO 2 / Receive PDO 2

VECTOR_G (CAN)

Can be changed: C1(3), T	**Calculated:** -	**Access level:** 3
Data type: Unsigned32	**Dynamic index:** -	**Func. diagram:** 9204, 9206
P-Group: Communications	**Units group:** -	**Unit selection:** -
Not for motor type: -	**Scaling:** -	**Expert list:** 1
Min	**Max**	**Factory setting**
0000 hex	8000 06DF hex	[0] 8000 06DF hex [1] 00FE hex

Description: Sets the communication parameters for CANopen Receive Process Data Object 2 (RPDO 2).

Index: [0] = PDO COB-ID
[1] = PDO transmission type

Dependency: A valid COB-ID can only be set for the available (existing) channel.
Refer to: p8740, p8741

Note: Corresponds to the CANopen object 1401 hex + 40 hex * x (x: Drive number 0 ... 7).
Transmission types 0, 1, FE and FF can be set.
PDO: Process Data Object

p8702[0...1] CAN Receive PDO 3 / Receive PDO 3

VECTOR_G (CAN)

Can be changed: C1(3), T	**Calculated:** -	**Access level:** 3
Data type: Unsigned32	**Dynamic index:** -	**Func. diagram:** 9204, 9206
P-Group: Communications	**Units group:** -	**Unit selection:** -
Not for motor type: -	**Scaling:** -	**Expert list:** 1
Min	**Max**	**Factory setting**
0000 hex	8000 06DF hex	[0] 8000 06DF hex [1] 00FE hex

Description: Sets the communication parameters for CANopen Receive Process Data Object 3 (RPDO 3).

Index: [0] = PDO COB-ID
[1] = PDO transmission type

Dependency: A valid COB-ID can only be set for the available (existing) channel.
Refer to: p8740, p8741

Note: Corresponds to the CANopen object 1402 hex + 40 hex * x (x: Drive number 0 ... 7).
Transmission types 0, 1, FE and FF can be set.
PDO: Process Data Object

© Siemens AG 2012 All Rights Reserved

p8703[0...1] CAN Receive PDO 4 / Receive PDO 4

VECTOR_G (CAN)

Can be changed: C1(3), T	**Calculated:** -	**Access level:** 3
Data type: Unsigned32	**Dynamic index:** -	**Func. diagram:** 9204, 9206
P-Group: Communications	**Units group:** -	**Unit selection:** -
Not for motor type: -	**Scaling:** -	**Expert list:** 1
Min	**Max**	**Factory setting**
0000 hex	8000 06DF hex	[0] 8000 06DF hex [1] 00FE hex

Description: Sets the communication parameters for CANopen Receive Process Data Object 4 (RPDO 4).

Index: [0] = PDO COB-ID
[1] = PDO transmission type

Dependency: A valid COB-ID can only be set for the available (existing) channel.
Refer to: p8740, p8741

Note: Corresponds to the CANopen object 1403 hex + 40 hex * x (x: Drive number 0 ... 7).
Transmission types 0, 1, FE and FF can be set.
PDO: Process Data Object

p8704[0...1] CAN Receive PDO 5 / Receive PDO 5

VECTOR_G (CAN)

Can be changed: C1(3), T	**Calculated:** -	**Access level:** 3
Data type: Unsigned32	**Dynamic index:** -	**Func. diagram:** 9204
P-Group: Communications	**Units group:** -	**Unit selection:** -
Not for motor type: -	**Scaling:** -	**Expert list:** 1
Min	**Max**	**Factory setting**
0000 hex	8000 06DF hex	[0] 8000 06DF hex [1] 00FE hex

Description: Sets the communication parameters for CANopen Receive Process Data Object 5 (RPDO 5).

Index: [0] = PDO COB-ID
[1] = PDO transmission type

Dependency: A valid COB-ID can only be set for the available (existing) channel.
Refer to: p8740, p8741

Note: Corresponds to the CANopen object 1404 hex + 40 hex * x (x: Drive number 0 ... 7).
Transmission types 0, 1, FE and FF can be set.
PDO: Process Data Object

p8705[0...1] CAN Receive PDO 6 / Receive PDO 6

VECTOR_G (CAN)

Can be changed: C1(3), T	**Calculated:** -	**Access level:** 3
Data type: Unsigned32	**Dynamic index:** -	**Func. diagram:** 9204
P-Group: Communications	**Units group:** -	**Unit selection:** -
Not for motor type: -	**Scaling:** -	**Expert list:** 1
Min	**Max**	**Factory setting**
0000 hex	8000 06DF hex	[0] 8000 06DF hex [1] 00FE hex

Description: Sets the communication parameters for CANopen Receive Process Data Object 6 (RPDO 6).

Index: [0] = PDO COB-ID
[1] = PDO transmission type

Dependency: A valid COB-ID can only be set for the available (existing) channel.
Refer to: p8740, p8741

Note: Corresponds to the CANopen object 1405 hex + 40 hex * x (x: Drive number 0 ... 7).
Transmission types 0, 1, FE and FF can be set.
PDO: Process Data Object

© Siemens AG 2012 All Rights Reserved

p8706[0...1] CAN Receive PDO 7 / Receive PDO 7

VECTOR_G (CAN)

Can be changed: C1(3), T	**Calculated:** -	**Access level:** 3
Data type: Unsigned32	**Dynamic index:** -	**Func. diagram:** 9204
P-Group: Communications	**Units group:** -	**Unit selection:** -
Not for motor type: -	**Scaling:** -	**Expert list:** 1
Min	**Max**	**Factory setting**
0000 hex	8000 06DF hex	[0] 8000 06DF hex [1] 00FE hex

Description: Sets the communication parameters for CANopen Receive Process Data Object 7 (RPDO 7).

Index: [0] = PDO COB-ID
[1] = PDO transmission type

Dependency: A valid COB-ID can only be set for the available (existing) channel.
Refer to: p8740, p8741

Note: Corresponds to the CANopen object 1406 hex + 40 hex * x (x: Drive number 0 ... 7).
Transmission types 0, 1, FE and FF can be set.
PDO: Process Data Object

p8707[0...1] CAN Receive PDO 8 / Receive PDO 8

VECTOR_G (CAN)

Can be changed: C1(3), T	**Calculated:** -	**Access level:** 3
Data type: Unsigned32	**Dynamic index:** -	**Func. diagram:** 9204
P-Group: Communications	**Units group:** -	**Unit selection:** -
Not for motor type: -	**Scaling:** -	**Expert list:** 1
Min	**Max**	**Factory setting**
0000 hex	8000 06DF hex	[0] 8000 06DF hex [1] 00FE hex

Description: Sets the communication parameters for CANopen Receive Process Data Object 8 (RPDO 8).

Index: [0] = PDO COB-ID
[1] = PDO transmission type

Dependency: A valid COB-ID can only be set for the available (existing) channel.
Refer to: p8740, p8741

Note: Corresponds to the CANopen object 1407 hex + 40 hex * x (x: Drive number 0 ... 7).
Transmission types 0, 1, FE and FF can be set.
PDO: Process Data Object

p8710[0...3] CAN Receive Mapping for RPDO 1 / Mapping RPDO 1

VECTOR_G (CAN)

Can be changed: C1(3), T	**Calculated:** -	**Access level:** 3
Data type: Unsigned32	**Dynamic index:** -	**Func. diagram:** 9204, 9206
P-Group: Communications	**Units group:** -	**Unit selection:** -
Not for motor type: -	**Scaling:** -	**Expert list:** 1
Min	**Max**	**Factory setting**
0000 hex	FFFF FFFF hex	0000 hex

Description: Sets the mapping parameters for CANopen Receive Process Data Object 1 (RPDO 1).

Index: [0] = Mapped object 1
[1] = Mapped object 2
[2] = Mapped object 3
[3] = Mapped object 4

Note: Corresponds to the CANopen object 1600 hex + 40 hex * x (x: Drive number 0 ... 7).
Dummy mapping not supported.
The parameter can only be written online when the associated COB ID in p870x is set as invalid.

© Siemens AG 2012 All Rights Reserved

p8711[0...3] CAN Receive Mapping for RPDO 2 / Mapping RPDO 2

VECTOR_G (CAN)	**Can be changed:** C1(3), T	**Calculated:** -	**Access level:** 3
	Data type: Unsigned32	**Dynamic index:** -	**Func. diagram:** 9204, 9206
	P-Group: Communications	**Units group:** -	**Unit selection:** -
	Not for motor type: -	**Scaling:** -	**Expert list:** 1
	Min	**Max**	**Factory setting**
	0000 hex	FFFF FFFF hex	0000 hex

Description: Sets the mapping parameters for CANopen Receive Process Data Object 2 (RPDO 2).

Index:
[0] = Mapped object 1
[1] = Mapped object 2
[2] = Mapped object 3
[3] = Mapped object 4

Note: Corresponds to the CANopen object 1601 hex + 40 hex * x (x: Drive number 0 ... 7).
Dummy mapping not supported.
The parameter can only be written online when the associated COB ID in p870x is set as invalid.

p8712[0...3] CAN Receive Mapping for RPDO 3 / Mapping RPDO 3

VECTOR_G (CAN)	**Can be changed:** C1(3), T	**Calculated:** -	**Access level:** 3
	Data type: Unsigned32	**Dynamic index:** -	**Func. diagram:** 9204, 9206
	P-Group: Communications	**Units group:** -	**Unit selection:** -
	Not for motor type: -	**Scaling:** -	**Expert list:** 1
	Min	**Max**	**Factory setting**
	0000 hex	FFFF FFFF hex	0000 hex

Description: Sets the mapping parameters for CANopen Receive Process Data Object 3 (RPDO 3).

Index:
[0] = Mapped object 1
[1] = Mapped object 2
[2] = Mapped object 3
[3] = Mapped object 4

Note: Corresponds to the CANopen object 1602 hex + 40 hex * x (x: Drive number 0 ... 7).
Dummy mapping not supported.
The parameter can only be written online when the associated COB ID in p870x is set as invalid.

p8713[0...3] CAN Receive Mapping for RPDO 4 / Mapping RPDO 4

VECTOR_G (CAN)	**Can be changed:** C1(3), T	**Calculated:** -	**Access level:** 3
	Data type: Unsigned32	**Dynamic index:** -	**Func. diagram:** 9204, 9206
	P-Group: Communications	**Units group:** -	**Unit selection:** -
	Not for motor type: -	**Scaling:** -	**Expert list:** 1
	Min	**Max**	**Factory setting**
	0000 hex	FFFF FFFF hex	0000 hex

Description: Sets the mapping parameters for CANopen Receive Process Data Object 4 (RPDO 4).

Index:
[0] = Mapped object 1
[1] = Mapped object 2
[2] = Mapped object 3
[3] = Mapped object 4

Note: Corresponds to the CANopen object 1603 hex + 40 hex * x (x: Drive number 0 ... 7).
Dummy mapping not supported.
The parameter can only be written online when the associated COB ID in p870x is set as invalid.

© Siemens AG 2012 All Rights Reserved

p8714[0...3] CAN Receive Mapping for RPDO 5 / Mapping RPDO 5

VECTOR_G (CAN)

Can be changed: C1(3), T	**Calculated:** -	**Access level:** 3
Data type: Unsigned32	**Dynamic index:** -	**Func. diagram:** 9204
P-Group: Communications	**Units group:** -	**Unit selection:** -
Not for motor type: -	**Scaling:** -	**Expert list:** 1
Min	**Max**	**Factory setting**
0000 hex	FFFF FFFF hex	0000 hex

Description: Sets the mapping parameters for CANopen Receive Process Data Object 5 (RPDO 5).

Index:
[0] = Mapped object 1
[1] = Mapped object 2
[2] = Mapped object 3
[3] = Mapped object 4

Note: Corresponds to the CANopen object 1604 hex + 40 hex * x (x: Drive number 0 ... 7).
Dummy mapping not supported.
The parameter can only be written online when the associated COB ID in p870x is set as invalid.

p8715[0...3] CAN Receive Mapping for RPDO 6 / Mapping RPDO 6

VECTOR_G (CAN)

Can be changed: C1(3), T	**Calculated:** -	**Access level:** 3
Data type: Unsigned32	**Dynamic index:** -	**Func. diagram:** 9204
P-Group: Communications	**Units group:** -	**Unit selection:** -
Not for motor type: -	**Scaling:** -	**Expert list:** 1
Min	**Max**	**Factory setting**
0000 hex	FFFF FFFF hex	0000 hex

Description: Sets the mapping parameters for CANopen Receive Process Data Object 6 (RPDO 6).

Index:
[0] = Mapped object 1
[1] = Mapped object 2
[2] = Mapped object 3
[3] = Mapped object 4

Note: Corresponds to the CANopen object 1605 hex + 40 hex * x (x: Drive number 0 ... 7).
Dummy mapping not supported.
The parameter can only be written online when the associated COB ID in p870x is set as invalid.

p8716[0...3] CAN Receive Mapping for RPDO 7 / Mapping RPDO 7

VECTOR_G (CAN)

Can be changed: C1(3), T	**Calculated:** -	**Access level:** 3
Data type: Unsigned32	**Dynamic index:** -	**Func. diagram:** 9204
P-Group: Communications	**Units group:** -	**Unit selection:** -
Not for motor type: -	**Scaling:** -	**Expert list:** 1
Min	**Max**	**Factory setting**
0000 hex	FFFF FFFF hex	0000 hex

Description: Sets the mapping parameters for CANopen Receive Process Data Object 7 (RPDO 7).

Index:
[0] = Mapped object 1
[1] = Mapped object 2
[2] = Mapped object 3
[3] = Mapped object 4

Note: Corresponds to the CANopen object 1606 hex + 40 hex * x (x: Drive number 0 ... 7).
Dummy mapping not supported.
The parameter can only be written online when the associated COB ID in p870x is set as invalid.

© Siemens AG 2012 All Rights Reserved

p8717[0...3] CAN Receive Mapping for RPDO 8 / Mapping RPDO 8

VECTOR_G (CAN)

Can be changed: C1(3), T	**Calculated:** -	**Access level:** 3
Data type: Unsigned32	**Dynamic index:** -	**Func. diagram:** 9204
P-Group: Communications	**Units group:** -	**Unit selection:** -
Not for motor type: -	**Scaling:** -	**Expert list:** 1
Min	**Max**	**Factory setting**
0000 hex	FFFF FFFF hex	0000 hex

Description: Sets the mapping parameters for CANopen Receive Process Data Object 8 (RPDO 8).

Index:
[0] = Mapped object 1
[1] = Mapped object 2
[2] = Mapped object 3
[3] = Mapped object 4

Note: Corresponds to the CANopen object 1607 hex + 40 hex * x (x: Drive number 0 ... 7).
Dummy mapping not supported.
The parameter can only be written online when the associated COB ID in p870x is set as invalid.

p8720[0...4] CAN Transmit PDO 1 / Transmit PDO 1

VECTOR_G (CAN)

Can be changed: C1(3), T	**Calculated:** -	**Access level:** 3
Data type: Unsigned32	**Dynamic index:** -	**Func. diagram:** 9208, 9210
P-Group: Communications	**Units group:** -	**Unit selection:** -
Not for motor type: -	**Scaling:** -	**Expert list:** 1
Min	**Max**	**Factory setting**
0000 hex	C000 06DF hex	[0] C000 06DF hex
		[1] 00FE hex
		[2] 0000 hex
		[3] 0000 hex
		[4] 0000 hex

Description: Sets the communication parameters for CANopen Transmit Process Data Object 1 (TPDO 1).

Index:
[0] = PDO COB-ID
[1] = PDO transmission type
[2] = Inhibit time (in 100 µs)
[3] = Reserved
[4] = Event timer (in ms)

Dependency: A valid COB-ID can only be set for the available (existing) channel.
Refer to: p8740, p8741

Notice: For inhibit time and even timer, the following apply:
A value that is not a multiple integer of CANopen (4 ms) is rounded-off.

Note: Corresponds to the CANopen object 1800 hex + 40 hex * x (x: Drive number 0 ... 7).
Transmission types 0, 1 ... F0, FE and FF can be set.
PDO: Process Data Object

p8721[0...4] CAN Transmit PDO 2 / Transmit PDO 2

VECTOR_G (CAN)

Can be changed: C1(3), T	**Calculated:** -	**Access level:** 3
Data type: Unsigned32	**Dynamic index:** -	**Func. diagram:** 9208, 9210
P-Group: Communications	**Units group:** -	**Unit selection:** -
Not for motor type: -	**Scaling:** -	**Expert list:** 1
Min	**Max**	**Factory setting**
0000 hex	C000 06DF hex	[0] C000 06DF hex
		[1] 00FE hex
		[2] 0000 hex
		[3] 0000 hex
		[4] 0000 hex

Description: Sets the communication parameters for CANopen Transmit Process Data Object 2 (TPDO 2).

© Siemens AG 2012 All Rights Reserved

Index: [0] = PDO COB-ID
[1] = PDO transmission type
[2] = Inhibit time (in 100 µs)
[3] = Reserved
[4] = Event timer (in ms)

Dependency: A valid COB-ID can only be set for the available (existing) channel.
Refer to: p8740, p8741

Notice: For inhibit time and even timer, the following apply:
A value that is not a multiple integer of CANopen (4 ms) is rounded-off.

Note: Corresponds to the CANopen object 1801 hex + 40 hex * x (x: Drive number 0 ... 7).
Transmission types 0, 1 ... F0, FE and FF can be set.
PDO: Process Data Object

p8722[0...4] CAN Transmit PDO 3 / Transmit PDO 3

VECTOR_G (CAN)

Can be changed: C1(3), T	**Calculated:** -	**Access level:** 3
Data type: Unsigned32	**Dynamic index:** -	**Func. diagram:** 9208, 9210
P-Group: Communications	**Units group:** -	**Unit selection:** -
Not for motor type: -	**Scaling:** -	**Expert list:** 1
Min	**Max**	**Factory setting**
0000 hex	C000 06DF hex	[0] C000 06DF hex
		[1] 00FE hex
		[2] 0000 hex
		[3] 0000 hex
		[4] 0000 hex

Description: Sets the communication parameters for CANopen Transmit Process Data Object 3 (TPDO 3).

Index: [0] = PDO COB-ID
[1] = PDO transmission type
[2] = Inhibit time (in 100 µs)
[3] = Reserved
[4] = Event timer (in ms)

Dependency: A valid COB-ID can only be set for the available (existing) channel.
Refer to: p8740, p8741

Notice: For inhibit time and even timer, the following apply:
A value that is not a multiple integer of CANopen (4 ms) is rounded-off.

Note: Corresponds to the CANopen object 1802 hex + 40 hex * x (x: Drive number 0 ... 7).
Transmission types 0, 1 ... F0, FE and FF can be set.
PDO: Process Data Object

p8723[0...4] CAN Transmit PDO 4 / Transmit PDO 4

VECTOR_G (CAN)

Can be changed: C1(3), T	**Calculated:** -	**Access level:** 3
Data type: Unsigned32	**Dynamic index:** -	**Func. diagram:** 9208, 9210
P-Group: Communications	**Units group:** -	**Unit selection:** -
Not for motor type: -	**Scaling:** -	**Expert list:** 1
Min	**Max**	**Factory setting**
0000 hex	C000 06DF hex	[0] C000 06DF hex
		[1] 00FE hex
		[2] 0000 hex
		[3] 0000 hex
		[4] 0000 hex

Description: Sets the communication parameters for CANopen Transmit Process Data Object 4 (TPDO 4).

Index: [0] = PDO COB-ID
[1] = PDO transmission type
[2] = Inhibit time (in 100 µs)
[3] = Reserved
[4] = Event timer (in ms)

© Siemens AG 2012 All Rights Reserved

Dependency: A valid COB-ID can only be set for the available (existing) channel.
Refer to: p8740, p8741

Notice: For inhibit time and even timer, the following apply:
A value that is not a multiple integer of CANopen (4 ms) is rounded-off.

Note: Corresponds to the CANopen object 1803 hex + 40 hex * x (x: Drive number 0 ... 7).
Transmission types 0, 1 ... F0, FE and FF can be set.
PDO: Process Data Object

p8724[0...4] CAN Transmit PDO 5 / Transmit PDO 5

VECTOR_G (CAN)

Can be changed: C1(3), T	**Calculated:** -	**Access level:** 3
Data type: Unsigned32	**Dynamic index:** -	**Func. diagram:** 9208
P-Group: Communications	**Units group:** -	**Unit selection:** -
Not for motor type: -	**Scaling:** -	**Expert list:** 1
Min	**Max**	**Factory setting**
0000 hex	C000 06DF hex	[0] C000 06DF hex
		[1] 00FE hex
		[2] 0000 hex
		[3] 0000 hex
		[4] 0000 hex

Description: Sets the communication parameters for CANopen Transmit Process Data Object 5 (TPDO 5).

Index:
[0] = PDO COB-ID
[1] = PDO transmission type
[2] = Inhibit time (in 100 µs)
[3] = Reserved
[4] = Event timer (in ms)

Dependency: A valid COB-ID can only be set for the available (existing) channel.
Refer to: p8740, p8741

Notice: For inhibit time and even timer, the following apply:
A value that is not a multiple integer of CANopen (4 ms) is rounded-off.

Note: Corresponds to the CANopen object 1804 hex + 40 hex * x (x: Drive number 0 ... 7).
Transmission types 0, 1 ... F0, FE and FF can be set.
PDO: Process Data Object

p8725[0...4] CAN Transmit PDO 6 / Transmit PDO 6

VECTOR_G (CAN)

Can be changed: C1(3), T	**Calculated:** -	**Access level:** 3
Data type: Unsigned32	**Dynamic index:** -	**Func. diagram:** 9208
P-Group: Communications	**Units group:** -	**Unit selection:** -
Not for motor type: -	**Scaling:** -	**Expert list:** 1
Min	**Max**	**Factory setting**
0000 hex	C000 06DF hex	[0] C000 06DF hex
		[1] 00FE hex
		[2] 0000 hex
		[3] 0000 hex
		[4] 0000 hex

Description: Sets the communication parameters for CANopen Transmit Process Data Object 6 (TPDO 6).

Index:
[0] = PDO COB-ID
[1] = PDO transmission type
[2] = Inhibit time (in 100 µs)
[3] = Reserved
[4] = Event timer (in ms)

Dependency: A valid COB-ID can only be set for the available (existing) channel.
Refer to: p8740, p8741

Notice: For inhibit time and even timer, the following apply:
A value that is not a multiple integer of CANopen (4 ms) is rounded-off.

© Siemens AG 2012 All Rights Reserved

Note: Corresponds to the CANopen object 1805 hex + 40 hex * x (x: Drive number 0 ... 7).
Transmission types 0, 1 ... F0, FE and FF can be set.
PDO: Process Data Object

p8726[0...4] CAN Transmit PDO 7 / Transmit PDO 7

VECTOR_G (CAN)

Can be changed: C1(3), T	**Calculated:** -	**Access level:** 3
Data type: Unsigned32	**Dynamic index:** -	**Func. diagram:** 9208
P-Group: Communications	**Units group:** -	**Unit selection:** -
Not for motor type: -	**Scaling:** -	**Expert list:** 1
Min	**Max**	**Factory setting**
0000 hex	C000 06DF hex	[0] C000 06DF hex
		[1] 00FE hex
		[2] 0000 hex
		[3] 0000 hex
		[4] 0000 hex

Description: Sets the communication parameters for CANopen Transmit Process Data Object 7 (TPDO 7).

Index:
[0] = PDO COB-ID
[1] = PDO transmission type
[2] = Inhibit time (in 100 µs)
[3] = Reserved
[4] = Event timer (in ms)

Dependency: A valid COB-ID can only be set for the available (existing) channel.
Refer to: p8740, p8741

Notice: For inhibit time and even timer, the following apply:
A value that is not a multiple integer of CANopen (4 ms) is rounded-off.

Note: Corresponds to the CANopen object 1806 hex + 40 hex * x (x: Drive number 0 ... 7).
Transmission types 0, 1 ... F0, FE and FF can be set.
PDO: Process Data Object

p8727[0...4] CAN Transmit PDO 8 / Transmit PDO 8

VECTOR_G (CAN)

Can be changed: C1(3), T	**Calculated:** -	**Access level:** 3
Data type: Unsigned32	**Dynamic index:** -	**Func. diagram:** 9208
P-Group: Communications	**Units group:** -	**Unit selection:** -
Not for motor type: -	**Scaling:** -	**Expert list:** 1
Min	**Max**	**Factory setting**
0000 hex	C000 06DF hex	[0] C000 06DF hex
		[1] 00FE hex
		[2] 0000 hex
		[3] 0000 hex
		[4] 0000 hex

Description: Sets the communication parameters for CANopen Transmit Process Data Object 8 (TPDO 8).

Index:
[0] = PDO COB-ID
[1] = PDO transmission type
[2] = Inhibit time (in 100 µs)
[3] = Reserved
[4] = Event timer (in ms)

Dependency: A valid COB-ID can only be set for the available (existing) channel.
Refer to: p8740, p8741

Notice: For inhibit time and even timer, the following apply:
A value that is not a multiple integer of CANopen (4 ms) is rounded-off.

Note: Corresponds to the CANopen object 1807 hex + 40 hex * x (x: Drive number 0 ... 7).
Transmission types 0, 1 ... F0, FE and FF can be set.
PDO: Process Data Object

© Siemens AG 2012 All Rights Reserved

p8730[0...3] CAN Transmit Mapping for TPDO 1 / Mapping TPDO 1

VECTOR_G (CAN)	**Can be changed:** C1(3), T	**Calculated:** -	**Access level:** 3
	Data type: Unsigned32	**Dynamic index:** -	**Func. diagram:** 9208, 9210
	P-Group: Communications	**Units group:** -	**Unit selection:** -
	Not for motor type: -	**Scaling:** -	**Expert list:** 1
	Min	**Max**	**Factory setting**
	0000 hex	FFFF FFFF hex	0000 hex

Description: Sets the mapping parameters for CANopen Transmit Process Data Object 1 (TPDO 1).

Index:
[0] = Mapped object 1
[1] = Mapped object 2
[2] = Mapped object 3
[3] = Mapped object 4

Note: Corresponds to the CANopen object 1A00 hex + 40 hex * x (x: Drive number 0 ... 7).
The parameter can only be written online when the associated COB ID in p872x is set as invalid.

p8731[0...3] CAN Transmit Mapping for TPDO 2 / Mapping TPDO 2

VECTOR_G (CAN)	**Can be changed:** C1(3), T	**Calculated:** -	**Access level:** 3
	Data type: Unsigned32	**Dynamic index:** -	**Func. diagram:** 9208, 9210
	P-Group: Communications	**Units group:** -	**Unit selection:** -
	Not for motor type: -	**Scaling:** -	**Expert list:** 1
	Min	**Max**	**Factory setting**
	0000 hex	FFFF FFFF hex	0000 hex

Description: Sets the mapping parameters for CANopen Transmit Process Data Object 2 (TPDO 2).

Index:
[0] = Mapped object 1
[1] = Mapped object 2
[2] = Mapped object 3
[3] = Mapped object 4

Note: Corresponds to the CANopen object 1A01 hex + 40 hex * x (x: Drive number 0 ... 7).
The parameter can only be written online when the associated COB ID in p872x is set as invalid.

p8732[0...3] CAN Transmit Mapping for TPDO 3 / Mapping TPDO 3

VECTOR_G (CAN)	**Can be changed:** C1(3), T	**Calculated:** -	**Access level:** 3
	Data type: Unsigned32	**Dynamic index:** -	**Func. diagram:** 9208, 9210
	P-Group: Communications	**Units group:** -	**Unit selection:** -
	Not for motor type: -	**Scaling:** -	**Expert list:** 1
	Min	**Max**	**Factory setting**
	0000 hex	FFFF FFFF hex	0000 hex

Description: Sets the mapping parameters for CANopen Transmit Process Data Object 3 (TPDO 3).

Index:
[0] = Mapped object 1
[1] = Mapped object 2
[2] = Mapped object 3
[3] = Mapped object 4

Note: Corresponds to the CANopen object 1A02 hex + 40 hex * x (x: Drive number 0 ... 7).
The parameter can only be written online when the associated COB ID in p872x is set as invalid.

p8733[0...3] CAN Transmit Mapping for TPDO 4 / Mapping TPDO 4

VECTOR_G (CAN)	**Can be changed:** C1(3), T	**Calculated:** -	**Access level:** 3
	Data type: Unsigned32	**Dynamic index:** -	**Func. diagram:** 9208, 9210
	P-Group: Communications	**Units group:** -	**Unit selection:** -
	Not for motor type: -	**Scaling:** -	**Expert list:** 1
	Min	**Max**	**Factory setting**
	0000 hex	FFFF FFFF hex	0000 hex

Description: Sets the mapping parameters for CANopen Transmit Process Data Object 4 (TPDO 4).

© Siemens AG 2012 All Rights Reserved

Index: [0] = Mapped object 1
[1] = Mapped object 2
[2] = Mapped object 3
[3] = Mapped object 4

Note: Corresponds to the CANopen object 1A03 hex + 40 hex * x (x: Drive number 0 ... 7).
The parameter can only be written online when the associated COB ID in p872x is set as invalid.

p8734[0...3] CAN Transmit Mapping for TPDO 5 / Mapping TPDO 5

VECTOR_G (CAN)

Can be changed: C1(3), T	**Calculated:** -	**Access level:** 3
Data type: Unsigned32	**Dynamic index:** -	**Func. diagram:** 9208
P-Group: Communications	**Units group:** -	**Unit selection:** -
Not for motor type: -	**Scaling:** -	**Expert list:** 1
Min	**Max**	**Factory setting**
0000 hex	FFFF FFFF hex	0000 hex

Description: Sets the mapping parameters for CANopen Transmit Process Data Object 5 (TPDO 5).

Index: [0] = Mapped object 1
[1] = Mapped object 2
[2] = Mapped object 3
[3] = Mapped object 4

Note: Corresponds to the CANopen object 1A04 hex + 40 hex * x (x: Drive number 0 ... 7).
The parameter can only be written online when the associated COB ID in p872x is set as invalid.

p8735[0...3] CAN Transmit Mapping for TPDO 6 / Mapping TPDO 6

VECTOR_G (CAN)

Can be changed: C1(3), T	**Calculated:** -	**Access level:** 3
Data type: Unsigned32	**Dynamic index:** -	**Func. diagram:** 9208
P-Group: Communications	**Units group:** -	**Unit selection:** -
Not for motor type: -	**Scaling:** -	**Expert list:** 1
Min	**Max**	**Factory setting**
0000 hex	FFFF FFFF hex	0000 hex

Description: Sets the mapping parameters for CANopen Transmit Process Data Object 6 (TPDO 6).

Index: [0] = Mapped object 1
[1] = Mapped object 2
[2] = Mapped object 3
[3] = Mapped object 4

Note: Corresponds to the CANopen object 1A05 hex + 40 hex * x (x: Drive number 0 ... 7).
The parameter can only be written online when the associated COB ID in p872x is set as invalid.

p8736[0...3] CAN Transmit Mapping for TPDO 7 / Mapping TPDO 7

VECTOR_G (CAN)

Can be changed: C1(3), T	**Calculated:** -	**Access level:** 3
Data type: Unsigned32	**Dynamic index:** -	**Func. diagram:** 9208
P-Group: Communications	**Units group:** -	**Unit selection:** -
Not for motor type: -	**Scaling:** -	**Expert list:** 1
Min	**Max**	**Factory setting**
0000 hex	FFFF FFFF hex	0000 hex

Description: Sets the mapping parameters for CANopen Transmit Process Data Object 7 (TPDO 7).

Index: [0] = Mapped object 1
[1] = Mapped object 2
[2] = Mapped object 3
[3] = Mapped object 4

Note: Corresponds to the CANopen object 1A06 hex + 40 hex * x (x: Drive number 0 ... 7).
The parameter can only be written online when the associated COB ID in p872x is set as invalid.

© Siemens AG 2012 All Rights Reserved

p8737[0...3] CAN Transmit Mapping for TPDO 8 / Mapping TPDO 8

VECTOR_G (CAN)	**Can be changed:** C1(3), T	**Calculated:** -	**Access level:** 3
	Data type: Unsigned32	**Dynamic index:** -	**Func. diagram:** 9208
	P-Group: Communications	**Units group:** -	**Unit selection:** -
	Not for motor type: -	**Scaling:** -	**Expert list:** 1
	Min	**Max**	**Factory setting**
	0000 hex	FFFF FFFF hex	0000 hex

Description: Sets the mapping parameters for CANopen Transmit Process Data Object 8 (TPDO 8).

Index:
[0] = Mapped object 1
[1] = Mapped object 2
[2] = Mapped object 3
[3] = Mapped object 4

Note: Corresponds to the CANopen object 1A07 hex + 40 hex * x (x: Drive number 0 ... 7).
The parameter can only be written online when the associated COB ID in p872x is set as invalid.

p8740[0...23] CAN channel distribution / Chann assign.

CU_G130_DP (CAN), CU_G130_PN (CAN), CU_G150_DP (CAN), CU_G150_PN (CAN)	**Can be changed:** T	**Calculated:** -	**Access level:** 3
	Data type: Unsigned16	**Dynamic index:** -	**Func. diagram:** -
	P-Group: -	**Units group:** -	**Unit selection:** -
	Not for motor type: -	**Scaling:** -	**Expert list:** 1
	Min	**Max**	**Factory setting**
	0	8	0

Description: Sets the number of channels for receive PDOs and Transmit PDOs.
To define the number of channels of a drive, there are 3 indices (3 * n indices, n = 8).
Index 0: Number of channels for receive PDOs (1st drive)
Index 1: Number of channels for transmit PDOs (1st drive)
Index 2: Reserved
Correspondingly, indices 3 to 5 are valid for the 2nd drive, etc.

Index:
[0] = Number of channels for receive PDOs (drive 1)
[1] = Number of channels for transmit PDOs (drive 1)
[2] = Reserved
[3] = Number of channels for receive PDOs (drive 2)
[4] = Number of channels for transmit PDOs (drive 2)
[5] = Reserved
[6] = Number of channels for receive PDOs (drive 3)
[7] = Number of channels for transmit PDOs (drive 3)
[8] = Reserved
[9] = Number of channels for receive PDOs (drive 4)
[10] = Number of channels for transmit PDOs (drive 4)
[11] = Reserved
[12] = Number of channels for receive PDOs (drive 5)
[13] = Number of channels for transmit PDOs (drive 5)
[14] = Reserved
[15] = Number of channels for receive PDOs (drive 6)
[16] = Number of channels for transmit PDOs (drive 6)
[17] = Reserved
[18] = Number of channels for receive PDOs (drive 7)
[19] = Number of channels for transmit PDOs (drive 7)
[20] = Reserved
[21] = Number of channels for receive PDOs (drive 8)
[22] = Number of channels for transmit PDOs (drive 8)
[23] = Reserved

Dependency: Refer to: p8741

Note: Channel assignment not yet in effect. To acknowledge set p8741 = 1.

© Siemens AG 2012 All Rights Reserved

p8741 CAN PDO configuration acknowledgement / PDO config ackn

CU_G130_DP (CAN), CU_G130_PN (CAN), CU_G150_DP (CAN), CU_G150_PN (CAN)

Can be changed: T	**Calculated:** -	**Access level:** 3
Data type: Integer16	**Dynamic index:** -	**Func. diagram:** -
P-Group: -	**Units group:** -	**Unit selection:** -
Not for motor type: -	**Scaling:** -	**Expert list:** 1

Min	Max	Factory setting
0	1	0

Description: Acknowledges the channel distribution selection made (p8740) and the setting of the predefined connection sets (p8744).

Value:
0: Inactive
1: Acknowledge configuration

Dependency: Refer to: p8740, p8744

r8742 CAN number of free RPDO channels / Qty free RPDO

CU_G130_DP (CAN), CU_G130_PN (CAN), CU_G150_DP (CAN), CU_G150_PN (CAN)

Can be changed: -	**Calculated:** -	**Access level:** 3
Data type: Unsigned16	**Dynamic index:** -	**Func. diagram:** -
P-Group: Communications	**Units group:** -	**Unit selection:** -
Not for motor type: -	**Scaling:** -	**Expert list:** 1

Min	Max	Factory setting
-	-	-

Description: Displays the RPDO channels that are still available.

Dependency: Refer to: p8741

Note: The display is updated after acknowledging the configuration (p8741 = 1).
Only the RPDO channels in p8740 for which an axis is present in the topology are detected!
RPDO: Receive Process Data Object

r8743[0...7] CAN assignment drive/drive ID / Drive ID

CU_G130_DP (CAN), CU_G130_PN (CAN), CU_G150_DP (CAN), CU_G150_PN (CAN)

Can be changed: -	**Calculated:** -	**Access level:** 3
Data type: Unsigned16	**Dynamic index:** -	**Func. diagram:** -
P-Group: -	**Units group:** -	**Unit selection:** -
Not for motor type: -	**Scaling:** -	**Expert list:** 1

Min	Max	Factory setting
-	-	-

Description: Displays the drive ID associated with each drive.

Index:
[0] = Drive ID for 1st drive
[1] = Drive ID for 2nd drive
[2] = Drive ID for 3rd drive
[3] = Drive ID for 4th drive
[4] = Drive ID for 5th drive
[5] = Drive ID for 6th drive
[6] = Drive ID for 7th drive
[7] = Drive ID for 8th drive

© Siemens AG 2012 All Rights Reserved

p8744 CAN PDO mapping configuration / PDO Mapping conf.

VECTOR_G (CAN)

Can be changed: C2, T	**Calculated:** -	**Access level:** 2
Data type: Integer16	**Dynamic index:** -	**Func. diagram:** 9204, 9206, 9208, 9210
P-Group: -	**Units group:** -	**Unit selection:** -
Not for motor type: -	**Scaling:** -	**Expert list:** 1
Min	**Max**	**Factory setting**
1	2	2

Description: Selector switch for the PDO mapping.

Sets the mapping for download or in the online mode after acknowledging with p8741.

Value:
1: Predefined Connection Set
2: Free PDO Mapping

r8750[0...15] CAN mapped 16-bit receive objects / RPDO 16 mapped

VECTOR_G (CAN)

Can be changed: -	**Calculated:** -	**Access level:** 3
Data type: Unsigned16	**Dynamic index:** -	**Func. diagram:** -
P-Group: Communications	**Units group:** -	**Unit selection:** -
Not for motor type: -	**Scaling:** -	**Expert list:** 1
Min	**Max**	**Factory setting**
-	-	-

Description: Displays the mapped 16-bit receive CANopen objects in the process data buffer.

Example:

If, e.g. the control word is mapped in an RPDO, then r8750 indicates the position of the control word in the process data buffer.

Index:
[0] = PZD 1
[1] = PZD 2
[2] = PZD 3
[3] = PZD 4
[4] = PZD 5
[5] = PZD 6
[6] = PZD 7
[7] = PZD 8
[8] = PZD 9
[9] = PZD 10
[10] = PZD 11
[11] = PZD 12
[12] = PZD 13
[13] = PZD 14
[14] = PZD 15
[15] = PZD 16

r8751[0...15] CAN mapped 16-bit transmit objects / TPDO 16 mapped

VECTOR_G (CAN)

Can be changed: -	**Calculated:** -	**Access level:** 3
Data type: Unsigned16	**Dynamic index:** -	**Func. diagram:** -
P-Group: Communications	**Units group:** -	**Unit selection:** -
Not for motor type: -	**Scaling:** -	**Expert list:** 1
Min	**Max**	**Factory setting**
-	-	-

Description: Displays mapped 16-bit transmit CANopen objects in the process data buffer.

Index:
[0] = PZD 1
[1] = PZD 2
[2] = PZD 3
[3] = PZD 4
[4] = PZD 5
[5] = PZD 6
[6] = PZD 7

© Siemens AG 2012 All Rights Reserved

[7] = PZD 8
[8] = PZD 9
[9] = PZD 10
[10] = PZD 11
[11] = PZD 12
[12] = PZD 13
[13] = PZD 14
[14] = PZD 15
[15] = PZD 16

Dependency: Refer to: r8750

r8760[0...14] CAN mapped 32-bit receive objects / RPDO 32 mapped

VECTOR_G (CAN)

Can be changed: -	**Calculated:** -	**Access level:** 3
Data type: Unsigned16	**Dynamic index:** -	**Func. diagram:** -
P-Group: Communications	**Units group:** -	**Unit selection:** -
Not for motor type: -	**Scaling:** -	**Expert list:** 1
Min	**Max**	**Factory setting**
-	-	-

Description: Displays the mapped 32-bit receive CANopen objects in the process data buffer.

Index:
[0] = PZD 1 + 2
[1] = PZD 2 + 3
[2] = PZD 3 + 4
[3] = PZD 4 + 5
[4] = PZD 5 + 6
[5] = PZD 6 + 7
[6] = PZD 7 + 8
[7] = PZD 8 + 9
[8] = PZD 9 + 10
[9] = PZD 10 + 11
[10] = PZD 11 + 12
[11] = PZD 12 + 13
[12] = PZD 13 + 14
[13] = PZD 14 + 15
[14] = PZD 15 + 16

r8761[0...14] CAN mapped 32-bit transmit objects / TPDO 32 mapped

VECTOR_G (CAN)

Can be changed: -	**Calculated:** -	**Access level:** 3
Data type: Unsigned16	**Dynamic index:** -	**Func. diagram:** -
P-Group: Communications	**Units group:** -	**Unit selection:** -
Not for motor type: -	**Scaling:** -	**Expert list:** 1
Min	**Max**	**Factory setting**
-	-	-

Description: Displays mapped 32-bit transmit CANopen objects in the process data buffer.

Index:
[0] = PZD 1 + 2
[1] = PZD 2 + 3
[2] = PZD 3 + 4
[3] = PZD 4 + 5
[4] = PZD 5 + 6
[5] = PZD 6 + 7
[6] = PZD 7 + 8
[7] = PZD 8 + 9
[8] = PZD 9 + 10
[9] = PZD 10 + 11
[10] = PZD 11 + 12
[11] = PZD 12 + 13
[12] = PZD 13 + 14
[13] = PZD 14 + 15
[14] = PZD 15 + 16

© Siemens AG 2012 All Rights Reserved

r8784 CO: CAN status word / Status word

VECTOR_G (CAN)

Can be changed: -	**Calculated:** -	**Access level:** 3
Data type: Unsigned16	**Dynamic index:** -	**Func. diagram:** 8010
P-Group: Communications	**Units group:** -	**Unit selection:** -
Not for motor type: -	**Scaling:** -	**Expert list:** 1
Min	**Max**	**Factory setting**
-	-	-

Description: Displays the CANopen status word.

Bit field:

Bit	Signal name	1 signal	0 signal	FP
00	Rdy for switch on	Yes	No	-
01	Ready	Yes	No	-
02	Operation enabled	Yes	No	-
03	Fault present	Yes	No	-
04	No coasting active	Yes	No	-
05	No Quick Stop active	Yes	No	-
06	Switching on inhibited active	Yes	No	-
07	Alarm present	Yes	No	-
08	Can be freely interconnected (BI: p8785)	High	Low	-
09	Control request	Yes	No	-
10	Target reached	Yes	No	-
11	Torque limit reached	Yes	No	-
12	Velocity equal to zero	Yes	No	-
14	Can be freely interconnected (BI: p8786)	High	Low	-
15	Can be freely interconnected (BI: p8787)	High	Low	-

Note: Corresponds to the CANopen object 6041 hex + 800 hex * x (x: Drive number 0 ... 7).

Re bit 10:

When the ramp-function generator is activated, the interconnection from CI: p2151 = r1119 can be changed, so that to evaluate bit 10, the setpoint can be retrieved (taken) from in front of the ramp-function generator.

Re bit 10, 12:

When braking, the two bits must indicate the same state. This is the reason that the following parameters must be set the same:

p2161 (speed threshold value 3, for r2199.0) = p2163 (speed threshold value 4, for r2197.7)

p2150 (hysteresis speed 3, for r2199.0) = p2164 (hysteresis speed 4, for r2197.7)

p8785 BI: CAN status word bit 8 / Status word bit 8

VECTOR_G (CAN)

Can be changed: T	**Calculated:** -	**Access level:** 3
Data type: Unsigned32 / Binary	**Dynamic index:** -	**Func. diagram:** -
P-Group: Communications	**Units group:** -	**Unit selection:** -
Not for motor type: -	**Scaling:** -	**Expert list:** 1
Min	**Max**	**Factory setting**
-	-	0

Description: Binector input for CANopen status word bit 8.

Dependency: Refer to: r8784

p8786 BI: CAN status word bit 14 / Status word bit 14

VECTOR_G (CAN)

Can be changed: T	**Calculated:** -	**Access level:** 3
Data type: Unsigned32 / Binary	**Dynamic index:** -	**Func. diagram:** -
P-Group: Communications	**Units group:** -	**Unit selection:** -
Not for motor type: -	**Scaling:** -	**Expert list:** 1
Min	**Max**	**Factory setting**
-	-	0

Description: Binector input for CANopen status word bit 14.

Dependency: Refer to: r8784

© Siemens AG 2012 All Rights Reserved

p8787 BI: CAN status word bit 15 / Status word bit 15

VECTOR_G (CAN)

Can be changed: T	**Calculated:** -	**Access level:** 3
Data type: Unsigned32 / Binary	**Dynamic index:** -	**Func. diagram:** -
P-Group: Communications	**Units group:** -	**Unit selection:** -
Not for motor type: -	**Scaling:** -	**Expert list:** 1
Min	**Max**	**Factory setting**
-	-	0

Description: Binector input for CANopen status word bit 15.

Dependency: Refer to: r8784

p8790 CAN control word - auto interconnection / STW interc auto

VECTOR_G (CAN)

Can be changed: C1(3), T	**Calculated:** -	**Access level:** 3
Data type: Integer16	**Dynamic index:** -	**Func. diagram:** -
P-Group: Communications	**Units group:** -	**Unit selection:** -
Not for motor type: -	**Scaling:** -	**Expert list:** 1
Min	**Max**	**Factory setting**
0	1	0

Description: Sets the automatic BICO interconnection of the CANopen control word.

Value:
0: No interconn
1: Interconnection

Dependency: Refer to: r2050, r2090, r2091, r2092, r2093, r8750, r8795, r8850, r8890, r8891, r8892, r8893

Note: The following BICO interconnections are automatically established if the CANopen control word is mapped at one of the locations x = 0 ... 3 in the receive process data buffer.

For SINAMICS S120 with CBC10, the PZD interface IF2 is used:

BI: p0840.0 = r889x.0
BI: p0844.0 = r889x.1
BI: p0848.0 = r889x.2
BI: p0852.0 = r889x.3
BI: p2103.0 = r889x.7

For SINAMICS S110, the PZD interface IF1 is used:

BI: p0840.0 = r209x.0
BI: p0844.0 = r209x.1
BI: p0848.0 = r209x.2
BI: p0852.0 = r209x.3
BI: p2103.0 = r209x.7

The write access is rejected if a CANopen control word is not mapped at one of these locations.

This also causes the project download of the commissioning software to be canceled.

r8795 CAN control word / Control word

VECTOR_G (CAN)

Can be changed: -	**Calculated:** -	**Access level:** 3
Data type: Unsigned16	**Dynamic index:** -	**Func. diagram:** -
P-Group: -	**Units group:** -	**Unit selection:** -
Not for motor type: -	**Scaling:** -	**Expert list:** 1
Min	**Max**	**Factory setting**
-	-	-

Description: Access to the CANopen control word using SDO transfer.

Bit field:

Bit	Signal name	1 signal	0 signal	FP
00	ON/OFF1	Yes	No	-
01	Do not activate coast down	Yes	No	-
02	Do not activate a Quick Stop	Yes	No	-
03	Operation enable	Yes	No	-
07	Acknowledge fault	Yes	No	-
11	Freely interconn	High	Low	-

© Siemens AG 2012 All Rights Reserved

12	Freely interconn	High	Low	-
13	Freely interconn	High	Low	-
14	Freely interconn	High	Low	-
15	Freely interconn	High	Low	-

Dependency: Refer to: p8790

Note: Corresponds to the CANopen object 6040 hex + 800 hex * x (x: Drive number 0 ... 7).

r8796 CAN Target Velocity / Target velocity

VECTOR_G (CAN)

Can be changed: -	**Calculated:** -	**Access level:** 3
Data type: Integer32	**Dynamic index:** -	**Func. diagram:** -
P-Group: -	**Units group:** -	**Unit selection:** -
Not for motor type: -	**Scaling:** -	**Expert list:** 1
Min	**Max**	**Factory setting**
-	-	-

Description: Access to the CANopen object target velocity using the SDO transfer.
The value is displayed in increments/second as standard.

Note: Corresponds to the CANopen object 60FF hex + 800 hex * x (x: Drive number 0 ... 7).
The displayed value is calculated as follows:
r8796 = n_set [RPM] / 60 s * p0408 * 2^p0418 * p8798[1] / p8798[0]

r8797 CAN Target Torque / Target torque

VECTOR_G (CAN)

Can be changed: -	**Calculated:** -	**Access level:** 3
Data type: Integer16	**Dynamic index:** -	**Func. diagram:** -
P-Group: -	**Units group:** -	**Unit selection:** -
Not for motor type: -	**Scaling:** -	**Expert list:** 1
Min	**Max**	**Factory setting**
-	-	-

Description: Access to the CANopen object target torque using SDO transfer.
The value is displayed as per mille (1/1000) as standard.

Note: Corresponds to the CANopen object 6071 hex + 800 hex * x (x: Drive number 0 ... 7).
The displayed value is calculated as follows:
r8797 [per mille] = M_set [Nm] / p0333 [Nm] * 1000

p8798[0...1] CAN speed conversion factor / n_conv_factor

VECTOR_G (CAN)

Can be changed: T	**Calculated:** -	**Access level:** 3
Data type: Unsigned32	**Dynamic index:** -	**Func. diagram:** -
P-Group: -	**Units group:** -	**Unit selection:** -
Not for motor type: -	**Scaling:** -	**Expert list:** 1
Min	**Max**	**Factory setting**
1	4294967295	1

Description: The factor converts the required velocity units into the internal velocity units (U/s).
With the factory setting, for CANopen, the velocity units are increments/second.
The parameter corresponds to the CANopen object 6094 hex.
The internal velocity is calculated as follows:
n_set_internal = object 6094.1 / object 6094.2 * 1/(p0408 * 2^p0418) * n_set_bus

Index: [0] = Counter
[1] = Denominator

© Siemens AG 2012 All Rights Reserved

p8811 SINAMICS Link project selection / SINAMICS Link proj

CU_G130_DP (PROFINET), CU_G130_PN (PROFINET), CU_G150_DP (PROFINET), CU_G150_PN (PROFINET)	**Can be changed:** C1(1)	**Calculated:** -	**Access level:** 3
	Data type: Integer16	**Dynamic index:** -	**Func. diagram:** -
	P-Group: Communications	**Units group:** -	**Unit selection:** -
	Not for motor type: -	**Scaling:** -	**Expert list:** 1

Min	Max	Factory setting
16	64	64

Description: Project selection for SINAMICS Link.

Value:
16: SINAMICS Link project 16 participants
64: SINAMICS Link project 64 participants

Note: SINAMICS Link requires that the appropriate CBE20 firmware version is selected (p8835 = 3).
The parameter must be set the same for all participants.
A change only becomes effective after a POWER ON.
The parameter is not influenced by setting the factory setting.

p8812[0...1] SINAMICS Link settings / SINAMICS Link cl c

CU_G130_DP (PROFINET), CU_G130_PN (PROFINET), CU_G150_DP (PROFINET), CU_G150_PN (PROFINET)	**Can be changed:** C1(1)	**Calculated:** -	**Access level:** 3
	Data type: Unsigned16	**Dynamic index:** -	**Func. diagram:** -
	P-Group: Communications	**Units group:** -	**Unit selection:** -
	Not for motor type: -	**Scaling:** -	**Expert list:** 1

Min	Max	Factory setting
0	2000	[0] 1
		[1] 2000

Description: Sets the clock cycle for SINAMICS Link.
Re index 0:
0 = clock synchronous mode not activated, 1 = clock synchronous mode activated
Re index 1:
Possible values: 500, 1000, 2000 µs

Index:
[0] = Activate isochronous mode
[1] = Bus CC [µs]

Dependency: Refer to: p8811

Note: SINAMICS Link requires that the appropriate CBE20 firmware version is selected (p8835 = 3).
A change only becomes effective after a POWER ON.
The parameter is not influenced by setting the factory setting.
Re index 0:
Is applicable for the synchronization of the application. The SINAMICS Link itself is always synchronous.
Re index 1:
The value must be set the same for all participants.
When newly selecting the project p8811, p8812[1] is set to the factory setting.
For p8811 = 16, the following applies:
Min/max/factory setting: 500/500/500 µs
For p8811 = 64, the following applies:
Min/max/factory setting: 1000/2000/2000 µs

© Siemens AG 2012 All Rights Reserved

p8815[0...1] IF1/IF2 PZD functionality selection / IF1/IF2 PZD fct

CU_G130_DP, CU_G130_PN, CU_G150_DP, CU_G150_PN	**Can be changed:** C1(1)	**Calculated:** -	**Access level:** 3
	Data type: Integer16	**Dynamic index:** -	**Func. diagram:** -
	P-Group: Communications	**Units group:** -	**Unit selection:** -
	Not for motor type: -	**Scaling:** -	**Expert list:** 1
	Min	**Max**	**Factory setting**
	1	2	1

Description: Selects the PZD interface for the clock cycle synchronization functionality and PROFIsafe.

Value:
1: Interface 1 (IF1)
2: Interface 2 (IF2)

Index:
[0] = Isochronous mode
[1] = PROFIsafe

Dependency: Refer to: p8839

Note: A change only becomes effective after POWER ON, reset or project download.
Example:
p8815[0] = 1: IF1 supports the isochronous mode.
p8815[1] = 2: IF2 supports PROFIsafe.

p8829 CBE20 remote controller number / CBE20 rem ctrl num

CU_G130_DP (PROFINET), CU_G130_PN (PROFINET), CU_G150_DP (PROFINET), CU_G150_PN (PROFINET)	**Can be changed:** C1(1)	**Calculated:** -	**Access level:** 3
	Data type: Integer16	**Dynamic index:** -	**Func. diagram:** -
	P-Group: Communications	**Units group:** -	**Unit selection:** -
	Not for motor type: -	**Scaling:** -	**Expert list:** 1
	Min	**Max**	**Factory setting**
	1	2	1

Description: Sets the number of remote controllers expected for PROFINET CBE20.
The "Shared Device" functionality is activated with a value = 2.
The drive is being accessed by two PROFINET controllers simultaneously:
- automation controller (SIMOTION or SIMATIC A-CPU).
- safety controller (SIMATIC F-CPU).

Value:
1: Automation or Safety
2: Automation and Safety

Notice: The F CPU may only use PROFIsafe telegrams.
The A CPU must be connected to enable the F CPU to gain access.
Set the value = 1 to commission the F CPU individually.

Note: A change only becomes effective after a POWER ON.

p8835 CBE20 firmware selection / CBE20 FW sel

CU_G130_DP (PROFINET), CU_G130_PN (PROFINET), CU_G150_DP (PROFINET), CU_G150_PN (PROFINET)	**Can be changed:** C1(1)	**Calculated:** -	**Access level:** 3
	Data type: Integer16	**Dynamic index:** -	**Func. diagram:** -
	P-Group: Communications	**Units group:** -	**Unit selection:** -
	Not for motor type: -	**Scaling:** -	**Expert list:** 1
	Min	**Max**	**Factory setting**
	1	99	1

Description: Selects the firmware version for the CBE20.

Value:
1: PROFINET Device
2: PN gate

© Siemens AG 2012 All Rights Reserved

3: SINAMICS Link
4: Ethernet/IP
99: Customer-specific from the OEM directory

Note: A change only becomes effective after a POWER ON.
The parameter is not influenced by setting the factory setting.
CBE20: Communication Board Ethernet 20

p8836 SINAMICS Link address / SINAMICS Link add

CU_G130_DP (PROFINET), CU_G130_PN (PROFINET), CU_G150_DP (PROFINET), CU_G150_PN (PROFINET)

Can be changed: C1(1)	**Calculated:** -	**Access level:** 3
Data type: Unsigned16	**Dynamic index:** -	**Func. diagram:** -
P-Group: Communications	**Units group:** -	**Unit selection:** -
Not for motor type: -	**Scaling:** -	**Expert list:** 1

Min	Max	Factory setting
0	64	0

Description: Selects the node address for the SINAMICS Link on the Communication Board Ethernet 20 (CBE20).
p8836 = 0: SINAMICS Link de-activated
p8836 = 1 ... 64: SINAMICS Link node address

Dependency: Refer to: p8835

Note: SINAMICS Link requires that the appropriate CBE20 firmware version is selected (p8835 = 3).
A change only becomes effective after a POWER ON.
The parameter is not influenced by setting the factory setting.

p8837 IF2 STW1.10 = 0 mode / IF2 STW1.10=0

B_INF, ENC, VECTOR_G

Can be changed: T	**Calculated:** -	**Access level:** 3
Data type: Integer16	**Dynamic index:** -	**Func. diagram:** -
P-Group: Communications	**Units group:** -	**Unit selection:** -
Not for motor type: -	**Scaling:** -	**Expert list:** 1

Min	Max	Factory setting
0	2	2

Description: Sets the processing mode for PROFIdrive STW1.10 "master control by PLC".
Generally, control world 1 is received with the first receive word (PZD1) (this is in conformance to the PROFIdrive profile). The behavior of STW1.10 = 0 corresponds to that of the PROFIdrive profile. For other applications that deviate from this, the behavior can be adapted using this particular parameter.

Value:
0: Freeze setpoints and continue to process sign-of-life
1: Freeze setpoints and sign-of-life
2: Do not freeze setpoints

Recommend.: Do not change the setting p2037 = 0.

Note: If the STW1 is not transferred according to the PROFIdrive with PZD1 (with bit 10 "master control by PLC"), then p2037 should be set to 2.

p8839[0...1] PZD interface hardware assignment / PZD IF HW assign

CU_G130_DP, CU_G130_PN, CU_G150_DP, CU_G150_PN

Can be changed: C1(1)	**Calculated:** -	**Access level:** 3
Data type: Integer16	**Dynamic index:** -	**Func. diagram:** -
P-Group: Communications	**Units group:** -	**Unit selection:** -
Not for motor type: -	**Scaling:** -	**Expert list:** 1

Min	Max	Factory setting
0	99	99

Description: Assignment of the hardware for cyclic communications via PZD interface 1 (IF1) and interface 2 (IF2).

Value:
0: Inactive
1: Control Unit onboard
2: COMM BOARD
99: Automatic

© Siemens AG 2012 All Rights Reserved

Index: [0] = Interface 1
[1] = Interface 2

Dependency: Refer to: p2030, p8815

Note: For value = 99 (automatic) the following applies:
- if a COMM BOARD is not inserted, then the onboard interface (PROFIBUS/PROFINET/USS) communicates via IF1.
- if a CBE20 is inserted, then the following applies:
-- CU320-2 DP: PROFINET CBE20 communicates via IF1 and PROFIBUS/USS via IF2.
-- CU320-2 PN: PROFINET onboard communicates via IF1 and PROFINET CBE20 via IF2.
- CAN CBC10 always communicates via IF2.
For a value not equal to 99 (automatic) the following applies:
- both indices must be set to a number not equal to 99 (automatic).
A change only becomes effective after POWER ON, reset or download.

p8840 COMM BOARD monitoring time / CB t_monit

CU_G130_DP (COMM BOARD, PROFINET), CU_G130_PN (COMM BOARD, PROFINET), CU_G150_DP (COMM BOARD, PROFINET), CU_G150_PN (COMM BOARD, PROFINET)

Can be changed: U, T	**Calculated:** -	**Access level:** 3
Data type: FloatingPoint32	**Dynamic index:** -	**Func. diagram:** -
P-Group: Communications	**Units group:** -	**Unit selection:** -
Not for motor type: -	**Scaling:** -	**Expert list:** 1

Min	Max	Factory setting
0 [ms]	65535000 [ms]	20 [ms]

Description: Sets the monitoring time to monitor the process data received via COMM BOARD.
If, during this time, the Control Unit does not receive any process data from the COMM BOARD, then an appropriate message is output.

Dependency: Refer to: F08501

Note: This monitoring function only monitors the connection between the Control Unit and COMM BOARD and not the data traffic on the fieldbus.
Value = 0: Monitoring is de-activated.

p8841[0...239] COMM BOARD send configuration data / CB s config_dat

CU_G130_DP (COMM BOARD, PROFINET), CU_G130_PN (COMM BOARD, PROFINET), CU_G150_DP (COMM BOARD, PROFINET), CU_G150_PN (COMM BOARD, PROFINET)

Can be changed: U, T	**Calculated:** -	**Access level:** 3
Data type: Unsigned16	**Dynamic index:** -	**Func. diagram:** -
P-Group: Communications	**Units group:** -	**Unit selection:** -
Not for motor type: -	**Scaling:** -	**Expert list:** 1

Min	Max	Factory setting
0	65535	0

Description: Sets the send configuration data for the COMM BOARD.
The setting is activated with p8842.

Dependency: Refer to: p8842

Note: The configuration data are specific to the inserted COMM BOARD.
For CBE20, the configuration data are not relevant.

© Siemens AG 2012 All Rights Reserved

p8842 Activate COMM BOARD send configuration / CB s config act

CU_G130_DP (COMM BOARD, PROFINET), CU_G130_PN (COMM BOARD, PROFINET), CU_G150_DP (COMM BOARD, PROFINET), CU_G150_PN (COMM BOARD, PROFINET)

Can be changed: U, T | **Calculated:** - | **Access level:** 3
Data type: Unsigned16 | **Dynamic index:** - | **Func. diagram:** -
P-Group: Communications | **Units group:** - | **Unit selection:** -
Not for motor type: - | **Scaling:** - | **Expert list:** 1

Min	Max	Factory setting
0	1	0

Description: Activate a modified send configuration for COMM BOARD.
With p8842 = 1, the values in p8841 are transferred to the COMM BOARD and activated. After this, p8842 is automatically set to zero.

Dependency: Refer to: p8841

Note: For CBE20, certain SINAMICS parameters are newly evaluated and activated. An existing, cyclic bus connection is interrupted.

r8843.0...2 BO: IF2 PZD state / IF2 PZD state

CU_G130_DP, CU_G130_PN, CU_G150_DP, CU_G150_PN

Can be changed: - | **Calculated:** - | **Access level:** 3
Data type: Unsigned8 | **Dynamic index:** - | **Func. diagram:** 2410
P-Group: Communications | **Units group:** - | **Unit selection:** -
Not for motor type: - | **Scaling:** - | **Expert list:** 1

Min	Max	Factory setting
-	-	-

Description: Displays the PROFIdrive PZD state.

Bit field:

Bit	Signal name	1 signal	0 signal	FP
00	Setpoint failure	Yes	No	-
01	Clock cycle synchronous operation active	Yes	No	-
02	Fieldbus oper	Yes	No	-

Dependency: Refer to: p2044

Note: When using the "setpoint failure" signal, the bus can be monitored and an application-specific response triggered when the setpoint fails.

p8844 IF2 fault delay / IF2 F delay

B_INF, ENC, VECTOR_G

Can be changed: U, T | **Calculated:** - | **Access level:** 3
Data type: FloatingPoint32 | **Dynamic index:** - | **Func. diagram:** 2410
P-Group: Communications | **Units group:** - | **Unit selection:** -
Not for motor type: - | **Scaling:** - | **Expert list:** 1

Min	Max	Factory setting
0 [s]	100 [s]	0 [s]

Description: Sets the delay time to initiate fault F01910 after a setpoint failure.
The time until the fault is initiated can be used by the application. This means that is is possible to respond to the failure while the drive is still operational (e.g. emergency retraction).

Dependency: Refer to: r2043
Refer to: F01910

© Siemens AG 2012 All Rights Reserved

p8848 IF2 PZD sampling time / IF2 PZD t_sample

CU_G130_DP, CU_G130_PN, CU_G150_DP, CU_G150_PN

Can be changed: C1(3)	**Calculated:** -	**Access level:** 3
Data type: FloatingPoint32	**Dynamic index:** -	**Func. diagram:** -
P-Group: Communications	**Units group:** -	**Unit selection:** -
Not for motor type: -	**Scaling:** -	**Expert list:** 1
Min	**Max**	**Factory setting**
1.00 [ms]	16.00 [ms]	4.00 [ms]

Description: Sets the sampling time for the cyclic interface 2 (IF2).

Note: The system only permits certain sampling times and after writing to this parameter, displays the value that has actually been set.

For clock cycle synchronous operation, the specified bus cycle time applies (Tdp).

r8849[0...139] COMM BOARD receive configuration data / CB r config_dat

CU_G130_DP (COMM BOARD, PROFINET), CU_G130_PN (COMM BOARD, PROFINET), CU_G150_DP (COMM BOARD, PROFINET), CU_G150_PN (COMM BOARD, PROFINET)

Can be changed: -	**Calculated:** -	**Access level:** 3
Data type: Unsigned16	**Dynamic index:** -	**Func. diagram:** -
P-Group: Communications	**Units group:** -	**Unit selection:** -
Not for motor type: -	**Scaling:** -	**Expert list:** 1
Min	**Max**	**Factory setting**
-	-	-

Description: Displays the receive configuration data for the COMM BOARD.

r8850[0...9] CO: IF2 PZD receive word / IF2 PZD recv word

B_INF

Can be changed: -	**Calculated:** -	**Access level:** 3
Data type: Integer16	**Dynamic index:** -	**Func. diagram:** 2491
P-Group: Communications	**Units group:** -	**Unit selection:** -
Not for motor type: -	**Scaling:** 4000H	**Expert list:** 1
Min	**Max**	**Factory setting**
-	-	-

Description: Connector output for interconnecting the PZD (setpoints) received via interface 2 in the word format.

Index:
[0] = PZD 1
[1] = PZD 2
[2] = PZD 3
[3] = PZD 4
[4] = PZD 5
[5] = PZD 6
[6] = PZD 7
[7] = PZD 8
[8] = PZD 9
[9] = PZD 10

Note: IF2: Interface 2

PZD1 to PZD2 are displayed bit-serially in r8890 to r8891.

© Siemens AG 2012 All Rights Reserved

r8850[0...19] CO: IF2 PZD receive word / IF2 PZD recv word

CU_G130_DP, CU_G130_PN, CU_G150_DP, CU_G150_PN	**Can be changed:** -	**Calculated:** -	**Access level:** 3
	Data type: Integer16	**Dynamic index:** -	**Func. diagram:** 2491
	P-Group: Communications	**Units group:** -	**Unit selection:** -
	Not for motor type: -	**Scaling:** 4000H	**Expert list:** 1
	Min	**Max**	**Factory setting**
	-	-	-

Description: Connector output for interconnecting the PZD (setpoints) received via interface 2 in the word format.

Index:
[0] = PZD 1
[1] = PZD 2
[2] = PZD 3
[3] = PZD 4
[4] = PZD 5
[5] = PZD 6
[6] = PZD 7
[7] = PZD 8
[8] = PZD 9
[9] = PZD 10
[10] = PZD 11
[11] = PZD 12
[12] = PZD 13
[13] = PZD 14
[14] = PZD 15
[15] = PZD 16
[16] = PZD 17
[17] = PZD 18
[18] = PZD 19
[19] = PZD 20

Note: IF2: Interface 2

PZD1 to PZD2 are displayed bit-serially in r8890 to r8891.

r8850[0...3] CO: IF2 PZD receive word / IF2 PZD recv word

ENC	**Can be changed:** -	**Calculated:** -	**Access level:** 3
	Data type: Integer16	**Dynamic index:** -	**Func. diagram:** 2485, 9204, 9206
	P-Group: Communications	**Units group:** -	**Unit selection:** -
	Not for motor type: -	**Scaling:** 4000H	**Expert list:** 1
	Min	**Max**	**Factory setting**
	-	-	-

Description: Connector output for interconnecting the PZD (setpoints) received via interface 2 in the word format.

Index:
[0] = PZD 1
[1] = PZD 2
[2] = PZD 3
[3] = PZD 4

Dependency: Refer to: r8860, r8890, r8891, r8892, r8893

Notice: Where there is a multiple interconnection of a connector output, all the connector inputs must either have Integer or FloatingPoint data types.

A BICO interconnection for a single PZD can only take place either on r8850 or r8860.

Note: IF2: Interface 2

PZD1 to PZD4 are displayed bit-serially in r8890 to r8893.

© Siemens AG 2012 All Rights Reserved

r8850[0...4] CO: IF2 PZD receive word / IF2 PZD recv word

TB30, TM150, TM31	**Can be changed:** -	**Calculated:** -	**Access level:** 3
	Data type: Integer16	**Dynamic index:** -	**Func. diagram:** 2491
	P-Group: Communications	**Units group:** -	**Unit selection:** -
	Not for motor type: -	**Scaling:** 4000H	**Expert list:** 1
	Min	**Max**	**Factory setting**
	-	-	-

Description: Connector output for interconnecting the PZD (setpoints) received via interface 2 in the word format.

Index:
[0] = PZD 1
[1] = PZD 2
[2] = PZD 3
[3] = PZD 4
[4] = PZD 5

Note: IF2: Interface 2

PZD1 to PZD2 are displayed bit-serially in r8890 to r8891.

r8850[0...31] CO: IF2 PZD receive word / IF2 PZD recv word

VECTOR_G	**Can be changed:** -	**Calculated:** -	**Access level:** 3
	Data type: Integer16	**Dynamic index:** -	**Func. diagram:** 2485, 9204, 9206
	P-Group: Communications	**Units group:** -	**Unit selection:** -
	Not for motor type: -	**Scaling:** 4000H	**Expert list:** 1
	Min	**Max**	**Factory setting**
	-	-	-

Description: Connector output for interconnecting the PZD (setpoints) received via interface 2 in the word format.

Index:
[0] = PZD 1
[1] = PZD 2
[2] = PZD 3
[3] = PZD 4
[4] = PZD 5
[5] = PZD 6
[6] = PZD 7
[7] = PZD 8
[8] = PZD 9
[9] = PZD 10
[10] = PZD 11
[11] = PZD 12
[12] = PZD 13
[13] = PZD 14
[14] = PZD 15
[15] = PZD 16
[16] = PZD 17
[17] = PZD 18
[18] = PZD 19
[19] = PZD 20
[20] = PZD 21
[21] = PZD 22
[22] = PZD 23
[23] = PZD 24
[24] = PZD 25
[25] = PZD 26
[26] = PZD 27
[27] = PZD 28
[28] = PZD 29
[29] = PZD 30
[30] = PZD 31
[31] = PZD 32

Dependency: Refer to: r8860, r8890, r8891, r8892, r8893

© Siemens AG 2012 All Rights Reserved

Notice: Where there is a multiple interconnection of a connector output, all the connector inputs must either have Integer or FloatingPoint data types.
A BICO interconnection for a single PZD can only take place either on r8850 or r8860.

Note: IF2: Interface 2
PZD1 to PZD4 are displayed bit-serially in r8890 to r8893.

p8851[0...9] CI: IF2 PZD send word / IF2 PZD send word

B_INF

Can be changed: U, T	**Calculated:** -	**Access level:** 3
Data type: Unsigned32 / Integer16	**Dynamic index:** -	**Func. diagram:** 2493, 9210
P-Group: Communications	**Units group:** -	**Unit selection:** -
Not for motor type: -	**Scaling:** 4000H	**Expert list:** 1
Min	**Max**	**Factory setting**
-	-	0

Description: Selects the PZD (actual values) to be sent via interface 2 in the word format.

Index:
[0] = PZD 1
[1] = PZD 2
[2] = PZD 3
[3] = PZD 4
[4] = PZD 5
[5] = PZD 6
[6] = PZD 7
[7] = PZD 8
[8] = PZD 9
[9] = PZD 10

Note: IF2: Interface 2

p8851[0...24] CI: IF2 PZD send word / IF2 PZD send word

CU_G130_DP, CU_G130_PN, CU_G150_DP, CU_G150_PN

Can be changed: U, T	**Calculated:** -	**Access level:** 3
Data type: Unsigned32 / Integer16	**Dynamic index:** -	**Func. diagram:** 2493, 9210
P-Group: Communications	**Units group:** -	**Unit selection:** -
Not for motor type: -	**Scaling:** 4000H	**Expert list:** 1
Min	**Max**	**Factory setting**
-	-	0

Description: Selects the PZD (actual values) to be sent via interface 2 in the word format.

Index:
[0] = PZD 1
[1] = PZD 2
[2] = PZD 3
[3] = PZD 4
[4] = PZD 5
[5] = PZD 6
[6] = PZD 7
[7] = PZD 8
[8] = PZD 9
[9] = PZD 10
[10] = PZD 11
[11] = PZD 12
[12] = PZD 13
[13] = PZD 14
[14] = PZD 15
[15] = PZD 16
[16] = PZD 17
[17] = PZD 18
[18] = PZD 19
[19] = PZD 20
[20] = PZD 21
[21] = PZD 22
[22] = PZD 23

© Siemens AG 2012 All Rights Reserved

[23] = PZD 24
[24] = PZD 25

Note: IF2: Interface 2

p8851[0...11] CI: IF2 PZD send word / IF2 PZD send word

ENC	**Can be changed:** U, T	**Calculated:** -	**Access level:** 3
	Data type: Unsigned32 / Integer16	**Dynamic index:** -	**Func. diagram:** 2487, 9208
	P-Group: Communications	**Units group:** -	**Unit selection:** -
	Not for motor type: -	**Scaling:** 4000H	**Expert list:** 1
	Min	**Max**	**Factory setting**
	-	-	0

Description: Selects the PZD (actual values) to be sent via interface 2 in the word format.

Index:
[0] = PZD 1
[1] = PZD 2
[2] = PZD 3
[3] = PZD 4
[4] = PZD 5
[5] = PZD 6
[6] = PZD 7
[7] = PZD 8
[8] = PZD 9
[9] = PZD 10
[10] = PZD 11
[11] = PZD 12

Dependency: Refer to: p8861

Note: IF2: Interface 2

p8851[0...4] CI: IF2 PZD send word / IF2 PZD send word

TB30, TM150, TM31	**Can be changed:** U, T	**Calculated:** -	**Access level:** 3
	Data type: Unsigned32 / Integer16	**Dynamic index:** -	**Func. diagram:** 2493, 9210
	P-Group: Communications	**Units group:** -	**Unit selection:** -
	Not for motor type: -	**Scaling:** 4000H	**Expert list:** 1
	Min	**Max**	**Factory setting**
	-	-	0

Description: Selects the PZD (actual values) to be sent via interface 2 in the word format.

Index:
[0] = PZD 1
[1] = PZD 2
[2] = PZD 3
[3] = PZD 4
[4] = PZD 5

Note: IF2: Interface 2

p8851[0...31] CI: IF2 PZD send word / IF2 PZD send word

VECTOR_G	**Can be changed:** U, T	**Calculated:** -	**Access level:** 3
	Data type: Unsigned32 / Integer16	**Dynamic index:** -	**Func. diagram:** 2487, 9208
	P-Group: Communications	**Units group:** -	**Unit selection:** -
	Not for motor type: -	**Scaling:** 4000H	**Expert list:** 1
	Min	**Max**	**Factory setting**
	-	-	0

Description: Selects the PZD (actual values) to be sent via interface 2 in the word format.

Index:
[0] = PZD 1
[1] = PZD 2
[2] = PZD 3
[3] = PZD 4
[4] = PZD 5
[5] = PZD 6

© Siemens AG 2012 All Rights Reserved

[6] = PZD 7
[7] = PZD 8
[8] = PZD 9
[9] = PZD 10
[10] = PZD 11
[11] = PZD 12
[12] = PZD 13
[13] = PZD 14
[14] = PZD 15
[15] = PZD 16
[16] = PZD 17
[17] = PZD 18
[18] = PZD 19
[19] = PZD 20
[20] = PZD 21
[21] = PZD 22
[22] = PZD 23
[23] = PZD 24
[24] = PZD 25
[25] = PZD 26
[26] = PZD 27
[27] = PZD 28
[28] = PZD 29
[29] = PZD 30
[30] = PZD 31
[31] = PZD 32

Dependency: Refer to: p8861

Note: IF2: Interface 2

r8853[0...9] IF2 diagnostics PZD send / IF2 diag PZD send

B_INF

Can be changed: -	**Calculated:** -	**Access level:** 3
Data type: Unsigned16	**Dynamic index:** -	**Func. diagram:** 2493
P-Group: Communications	**Units group:** -	**Unit selection:** -
Not for motor type: -	**Scaling:** -	**Expert list:** 1
Min	**Max**	**Factory setting**
-	-	-

Description: Displays the sent PZD (actual values) sent via interface 2.

Index:
[0] = PZD 1
[1] = PZD 2
[2] = PZD 3
[3] = PZD 4
[4] = PZD 5
[5] = PZD 6
[6] = PZD 7
[7] = PZD 8
[8] = PZD 9
[9] = PZD 10

Bit field:

Bit	Signal name	1 signal	0 signal	FP
00	Bit 0	ON	OFF	-
01	Bit 1	ON	OFF	-
02	Bit 2	ON	OFF	-
03	Bit 3	ON	OFF	-
04	Bit 4	ON	OFF	-
05	Bit 5	ON	OFF	-
06	Bit 6	ON	OFF	-
07	Bit 7	ON	OFF	-
08	Bit 8	ON	OFF	-
09	Bit 9	ON	OFF	-
10	Bit 10	ON	OFF	-
11	Bit 11	ON	OFF	-

© Siemens AG 2012 All Rights Reserved

12	Bit 12	ON	OFF	-
13	Bit 13	ON	OFF	-
14	Bit 14	ON	OFF	-
15	Bit 15	ON	OFF	-

Note: IF2: Interface 2

r8853[0...24] IF2 diagnostics PZD send / IF2 diag PZD send

CU_G130_DP, CU_G130_PN, CU_G150_DP, CU_G150_PN

Can be changed: -	**Calculated:** -	**Access level:** 3
Data type: Unsigned16	**Dynamic index:** -	**Func. diagram:** 2493
P-Group: Communications	**Units group:** -	**Unit selection:** -
Not for motor type: -	**Scaling:** -	**Expert list:** 1
Min	**Max**	**Factory setting**
-	-	-

Description: Displays the sent PZD (actual values) sent via interface 2.

Index:
[0] = PZD 1
[1] = PZD 2
[2] = PZD 3
[3] = PZD 4
[4] = PZD 5
[5] = PZD 6
[6] = PZD 7
[7] = PZD 8
[8] = PZD 9
[9] = PZD 10
[10] = PZD 11
[11] = PZD 12
[12] = PZD 13
[13] = PZD 14
[14] = PZD 15
[15] = PZD 16
[16] = PZD 17
[17] = PZD 18
[18] = PZD 19
[19] = PZD 20
[20] = PZD 21
[21] = PZD 22
[22] = PZD 23
[23] = PZD 24
[24] = PZD 25

Bit field:

Bit	Signal name	1 signal	0 signal	FP
00	Bit 0	ON	OFF	-
01	Bit 1	ON	OFF	-
02	Bit 2	ON	OFF	-
03	Bit 3	ON	OFF	-
04	Bit 4	ON	OFF	-
05	Bit 5	ON	OFF	-
06	Bit 6	ON	OFF	-
07	Bit 7	ON	OFF	-
08	Bit 8	ON	OFF	-
09	Bit 9	ON	OFF	-
10	Bit 10	ON	OFF	-
11	Bit 11	ON	OFF	-
12	Bit 12	ON	OFF	-
13	Bit 13	ON	OFF	-
14	Bit 14	ON	OFF	-
15	Bit 15	ON	OFF	-

Note: IF2: Interface 2

© Siemens AG 2012 All Rights Reserved

r8853[0...11] IF2 diagnostics PZD send / IF2 diag PZD send

ENC

Can be changed: - **Calculated:** - **Access level:** 3
Data type: Unsigned16 **Dynamic index:** - **Func. diagram:** 2487, 9208, 9210
P-Group: Communications **Units group:** - **Unit selection:** -
Not for motor type: - **Scaling:** - **Expert list:** 1

Min	Max	Factory setting
-	-	-

Description: Displays the sent PZD (actual values) sent via interface 2.

Index:
[0] = PZD 1
[1] = PZD 2
[2] = PZD 3
[3] = PZD 4
[4] = PZD 5
[5] = PZD 6
[6] = PZD 7
[7] = PZD 8
[8] = PZD 9
[9] = PZD 10
[10] = PZD 11
[11] = PZD 12

Bit field:

Bit	Signal name	1 signal	0 signal	FP
00	Bit 0	ON	OFF	-
01	Bit 1	ON	OFF	-
02	Bit 2	ON	OFF	-
03	Bit 3	ON	OFF	-
04	Bit 4	ON	OFF	-
05	Bit 5	ON	OFF	-
06	Bit 6	ON	OFF	-
07	Bit 7	ON	OFF	-
08	Bit 8	ON	OFF	-
09	Bit 9	ON	OFF	-
10	Bit 10	ON	OFF	-
11	Bit 11	ON	OFF	-
12	Bit 12	ON	OFF	-
13	Bit 13	ON	OFF	-
14	Bit 14	ON	OFF	-
15	Bit 15	ON	OFF	-

Dependency: Refer to: p8851, p8861

Note: IF2: Interface 2

r8853[0...4] IF2 diagnostics PZD send / IF2 diag PZD send

TB30, TM150, TM31

Can be changed: - **Calculated:** - **Access level:** 3
Data type: Unsigned16 **Dynamic index:** - **Func. diagram:** 2493
P-Group: Communications **Units group:** - **Unit selection:** -
Not for motor type: - **Scaling:** - **Expert list:** 1

Min	Max	Factory setting
-	-	-

Description: Displays the sent PZD (actual values) sent via interface 2.

Index:
[0] = PZD 1
[1] = PZD 2
[2] = PZD 3
[3] = PZD 4
[4] = PZD 5

© Siemens AG 2012 All Rights Reserved

Bit field:	Bit	Signal name	1 signal	0 signal	FP
	00	Bit 0	ON	OFF	-
	01	Bit 1	ON	OFF	-
	02	Bit 2	ON	OFF	-
	03	Bit 3	ON	OFF	-
	04	Bit 4	ON	OFF	-
	05	Bit 5	ON	OFF	-
	06	Bit 6	ON	OFF	-
	07	Bit 7	ON	OFF	-
	08	Bit 8	ON	OFF	-
	09	Bit 9	ON	OFF	-
	10	Bit 10	ON	OFF	-
	11	Bit 11	ON	OFF	-
	12	Bit 12	ON	OFF	-
	13	Bit 13	ON	OFF	-
	14	Bit 14	ON	OFF	-
	15	Bit 15	ON	OFF	-

Note: IF2: Interface 2

r8853[0...31] IF2 diagnostics PZD send / IF2 diag PZD send

VECTOR_G

Can be changed: -	**Calculated:** -	**Access level:** 3
Data type: Unsigned16	**Dynamic index:** -	**Func. diagram:** 2487, 9208, 9210
P-Group: Communications	**Units group:** -	**Unit selection:** -
Not for motor type: -	**Scaling:** -	**Expert list:** 1
Min	**Max**	**Factory setting**
-	-	-

Description: Displays the sent PZD (actual values) sent via interface 2.

Index:
[0] = PZD 1
[1] = PZD 2
[2] = PZD 3
[3] = PZD 4
[4] = PZD 5
[5] = PZD 6
[6] = PZD 7
[7] = PZD 8
[8] = PZD 9
[9] = PZD 10
[10] = PZD 11
[11] = PZD 12
[12] = PZD 13
[13] = PZD 14
[14] = PZD 15
[15] = PZD 16
[16] = PZD 17
[17] = PZD 18
[18] = PZD 19
[19] = PZD 20
[20] = PZD 21
[21] = PZD 22
[22] = PZD 23
[23] = PZD 24
[24] = PZD 25
[25] = PZD 26
[26] = PZD 27
[27] = PZD 28
[28] = PZD 29
[29] = PZD 30
[30] = PZD 31
[31] = PZD 32

© Siemens AG 2012 All Rights Reserved

Bit field:	Bit	Signal name	1 signal	0 signal	FP
	00	Bit 0	ON	OFF	-
	01	Bit 1	ON	OFF	-
	02	Bit 2	ON	OFF	-
	03	Bit 3	ON	OFF	-
	04	Bit 4	ON	OFF	-
	05	Bit 5	ON	OFF	-
	06	Bit 6	ON	OFF	-
	07	Bit 7	ON	OFF	-
	08	Bit 8	ON	OFF	-
	09	Bit 9	ON	OFF	-
	10	Bit 10	ON	OFF	-
	11	Bit 11	ON	OFF	-
	12	Bit 12	ON	OFF	-
	13	Bit 13	ON	OFF	-
	14	Bit 14	ON	OFF	-
	15	Bit 15	ON	OFF	-

Dependency: Refer to: p8851, p8861

Note: IF2: Interface 2

r8854 COMM BOARD state / CB state

CU_G130_DP (COMM BOARD, PROFINET), CU_G130_PN (COMM BOARD, PROFINET), CU_G150_DP (COMM BOARD, PROFINET), CU_G150_PN (COMM BOARD, PROFINET)

Can be changed: - **Calculated:** - **Access level:** 3
Data type: Integer16 **Dynamic index:** - **Func. diagram:** -
P-Group: Communications **Units group:** - **Unit selection:** -
Not for motor type: - **Scaling:** - **Expert list:** 1

Min	Max	Factory setting
0	255	-

Description: Status display for COMM BOARD.

Value:
0: No initialization
1: Fatal fault
2: Initialization
3: Send configuration
4: Receive configuration
5: Non-cyclic communication
6: Cyclic communications but no setpoints (stop/no clock cycle)
255: Cyclic communication

r8858[0...39] COMM BOARD read diagnostics channel / CB diag_chan read

CU_G130_DP (COMM BOARD, PROFINET), CU_G130_PN (COMM BOARD, PROFINET), CU_G150_DP (COMM BOARD, PROFINET), CU_G150_PN (COMM BOARD, PROFINET)

Can be changed: - **Calculated:** - **Access level:** 3
Data type: Unsigned16 **Dynamic index:** - **Func. diagram:** -
P-Group: Communications **Units group:** - **Unit selection:** -
Not for motor type: - **Scaling:** - **Expert list:** 1

Min	Max	Factory setting
-	-	-

Description: Displays the COMM BOARD diagnostics data.

© Siemens AG 2012 All Rights Reserved

Note: The display depends on the COMM BOARD being used.
Example for CBE20:
r8858[0] = 4201 --> Siemens CBE20
r8858[1] = 1 --> firmware type = PROFINET device (see p8835)
r8858[2] = x --> state of cyclic communication
r8858[3] = y --> state of the IP configuration
r8858[4] = 1281 --> device ID 0501 hex = SINAMICS S120/S150
r8858[5 ... 39] --> only for internal Siemens diagnostics.

r8859[0...7] COMM BOARD identification Data / CB Ident_data

CU_G130_DP (COMM BOARD, PROFINET), CU_G130_PN (COMM BOARD, PROFINET), CU_G150_DP (COMM BOARD, PROFINET), CU_G150_PN (COMM BOARD, PROFINET)

Can be changed: -	**Calculated:** -	**Access level:** 3
Data type: Unsigned16	**Dynamic index:** -	**Func. diagram:** -
P-Group: Communications	**Units group:** -	**Unit selection:** -
Not for motor type: -	**Scaling:** -	**Expert list:** 1

Min	Max	Factory setting
-	-	-

Description: Displays the COMM BOARD identification data

Index:
[0] = Version interface structure
[1] = Version interface driver
[2] = Company (Siemens = 42)
[3] = CB type
[4] = Firmware version
[5] = Firmware date (year)
[6] = Firmware date (day/month)
[7] = Firmware patch/hot fix

Note: Example for CBE20:
r8859[0] = 100 --> version of the interface structure V1.00
r8859[1] = 111 --> version of the interface driver V1.11
r8859[2] = 42 --> SIEMENS
r8859[3] = 0 --> CBE20
r8859[4] = 1200 --> first part, firmware version V12.00 (second part, see index 7)
r8859[5] = 2010 --> year 2010
r8859[6] = 2306 --> 23rd June
r8859[7] = 1300 --> second part, firmware version (complete version: V12.00.13.00)

r8860[0...2] CO: IF2 PZD receive double word / IF2 PZD recv DW

ENC

Can be changed: -	**Calculated:** -	**Access level:** 3
Data type: Integer32	**Dynamic index:** -	**Func. diagram:** 2485, 9204, 9206
P-Group: Communications	**Units group:** -	**Unit selection:** -
Not for motor type: -	**Scaling:** 4000H	**Expert list:** 1

Min	Max	Factory setting
-	-	-

Description: Connector output for interconnecting the PZD (setpoints) received via interface 2 in the double word format.

Index:
[0] = PZD 1 + 2
[1] = PZD 2 + 3
[2] = PZD 3 + 4

Dependency: Refer to: r8850

© Siemens AG 2012 All Rights Reserved

Notice: Where there is a multiple interconnection of a connector output, all the connector inputs must either have Integer or FloatingPoint data types.
A BICO interconnection for a single PZD can only take place either on r8850 or r8860.

Note: IF2: Interface 2

r8860[0...30] CO: IF2 PZD receive double word / IF2 PZD recv DW

VECTOR_G	**Can be changed:** -	**Calculated:** -	**Access level:** 3
	Data type: Integer32	**Dynamic index:** -	**Func. diagram:** 2485, 9204, 9206
	P-Group: Communications	**Units group:** -	**Unit selection:** -
	Not for motor type: -	**Scaling:** 4000H	**Expert list:** 1
	Min	**Max**	**Factory setting**
	-	-	-

Description: Connector output for interconnecting the PZD (setpoints) received via interface 2 in the double word format.

Index:
[0] = PZD 1 + 2
[1] = PZD 2 + 3
[2] = PZD 3 + 4
[3] = PZD 4 + 5
[4] = PZD 5 + 6
[5] = PZD 6 + 7
[6] = PZD 7 + 8
[7] = PZD 8 + 9
[8] = PZD 9 + 10
[9] = PZD 10 + 11
[10] = PZD 11 + 12
[11] = PZD 12 + 13
[12] = PZD 13 + 14
[13] = PZD 14 + 15
[14] = PZD 15 + 16
[15] = PZD 16 + 17
[16] = PZD 17 + 18
[17] = PZD 18 + 19
[18] = PZD 19 + 20
[19] = PZD 20 + 21
[20] = PZD 21 + 22
[21] = PZD 22 + 23
[22] = PZD 23 + 24
[23] = PZD 24 + 25
[24] = PZD 25 + 26
[25] = PZD 26 + 27
[26] = PZD 27 + 28
[27] = PZD 28 + 29
[28] = PZD 29 + 30
[29] = PZD 30 + 31
[30] = PZD 31 + 32

Dependency: Refer to: r8850

Notice: Where there is a multiple interconnection of a connector output, all the connector inputs must either have Integer or FloatingPoint data types.
A BICO interconnection for a single PZD can only take place either on r8850 or r8860.
A maximum of 4 indices of the "trace" function can be used.

Note: IF2: Interface 2

© Siemens AG 2012 All Rights Reserved

p8861[0...10] CI: IF2 PZD send double word / IF2 PZD send DW

ENC	**Can be changed:** U, T	**Calculated:** -	**Access level:** 3
	Data type: Unsigned32 / Integer32	**Dynamic index:** -	**Func. diagram:** 2487, 9208, 9210
	P-Group: Communications	**Units group:** -	**Unit selection:** -
	Not for motor type: -	**Scaling:** 4000H	**Expert list:** 1
	Min	**Max**	**Factory setting**
	-	-	0

Description: Selects the PZD (actual values) to be sent via interface 2 in the double word format.

Index:
[0] = PZD 1 + 2
[1] = PZD 2 + 3
[2] = PZD 3 + 4
[3] = PZD 4 + 5
[4] = PZD 5 + 6
[5] = PZD 6 + 7
[6] = PZD 7 + 8
[7] = PZD 8 + 9
[8] = PZD 9 + 10
[9] = PZD 10 + 11
[10] = PZD 11 + 12

Dependency: Refer to: p8851

Notice: A BICO interconnection for a single PZD can only take place either on r8851 or r8861.

Note: IF2: Interface 2

p8861[0...30] CI: IF2 PZD send double word / IF2 PZD send DW

VECTOR_G	**Can be changed:** U, T	**Calculated:** -	**Access level:** 3
	Data type: Unsigned32 / Integer32	**Dynamic index:** -	**Func. diagram:** 2487, 9208, 9210
	P-Group: Communications	**Units group:** -	**Unit selection:** -
	Not for motor type: -	**Scaling:** 4000H	**Expert list:** 1
	Min	**Max**	**Factory setting**
	-	-	0

Description: Selects the PZD (actual values) to be sent via interface 2 in the double word format.

Index:
[0] = PZD 1 + 2
[1] = PZD 2 + 3
[2] = PZD 3 + 4
[3] = PZD 4 + 5
[4] = PZD 5 + 6
[5] = PZD 6 + 7
[6] = PZD 7 + 8
[7] = PZD 8 + 9
[8] = PZD 9 + 10
[9] = PZD 10 + 11
[10] = PZD 11 + 12
[11] = PZD 12 + 13
[12] = PZD 13 + 14
[13] = PZD 14 + 15
[14] = PZD 15 + 16
[15] = PZD 16 + 17
[16] = PZD 17 + 18
[17] = PZD 18 + 19
[18] = PZD 19 + 20
[19] = PZD 20 + 21
[20] = PZD 21 + 22
[21] = PZD 22 + 23
[22] = PZD 23 + 24
[23] = PZD 24 + 25
[24] = PZD 25 + 26

© Siemens AG 2012 All Rights Reserved

[25] = PZD 26 + 27
[26] = PZD 27 + 28
[27] = PZD 28 + 29
[28] = PZD 29 + 30
[29] = PZD 30 + 31
[30] = PZD 31 + 32

Dependency: Refer to: p8851

Notice: A BICO interconnection for a single PZD can only take place either on r8851 or r8861.

Note: IF2: Interface 2

r8863[0...10] IF2 diagnostics PZD send double word / IF2 diag send DW

ENC

Can be changed: -	**Calculated:** -	**Access level:** 3
Data type: Unsigned32	**Dynamic index:** -	**Func. diagram:** 2487
P-Group: Communications	**Units group:** -	**Unit selection:** -
Not for motor type: -	**Scaling:** -	**Expert list:** 1
Min	**Max**	**Factory setting**
-	-	-

Description: Displays the PZD sent via interface 2 (actual values) with double word format.

Index:
[0] = PZD 1 + 2
[1] = PZD 2 + 3
[2] = PZD 3 + 4
[3] = PZD 4 + 5
[4] = PZD 5 + 6
[5] = PZD 6 + 7
[6] = PZD 7 + 8
[7] = PZD 8 + 9
[8] = PZD 9 + 10
[9] = PZD 10 + 11
[10] = PZD 11 + 12

Bit field:

Bit	Signal name	1 signal	0 signal	FP
00	Bit 0	ON	OFF	-
01	Bit 1	ON	OFF	-
02	Bit 2	ON	OFF	-
03	Bit 3	ON	OFF	-
04	Bit 4	ON	OFF	-
05	Bit 5	ON	OFF	-
06	Bit 6	ON	OFF	-
07	Bit 7	ON	OFF	-
08	Bit 8	ON	OFF	-
09	Bit 9	ON	OFF	-
10	Bit 10	ON	OFF	-
11	Bit 11	ON	OFF	-
12	Bit 12	ON	OFF	-
13	Bit 13	ON	OFF	-
14	Bit 14	ON	OFF	-
15	Bit 15	ON	OFF	-
16	Bit 16	ON	OFF	-
17	Bit 17	ON	OFF	-
18	Bit 18	ON	OFF	-
19	Bit 19	ON	OFF	-
20	Bit 20	ON	OFF	-
21	Bit 21	ON	OFF	-
22	Bit 22	ON	OFF	-
23	Bit 23	ON	OFF	-
24	Bit 24	ON	OFF	-
25	Bit 25	ON	OFF	-
26	Bit 26	ON	OFF	-
27	Bit 27	ON	OFF	-
28	Bit 28	ON	OFF	-
29	Bit 29	ON	OFF	-

© Siemens AG 2012 All Rights Reserved

30	Bit 30	ON	OFF	-
31	Bit 31	ON	OFF	-

Notice: A maximum of 4 indices of the "trace" function can be used.

Note: IF2: Interface 2

r8863[0...30] IF2 diagnostics PZD send double word / IF2 diag send DW

VECTOR_G

Can be changed: -	**Calculated:** -	**Access level:** 3
Data type: Unsigned32	**Dynamic index:** -	**Func. diagram:** 2487
P-Group: Communications	**Units group:** -	**Unit selection:** -
Not for motor type: -	**Scaling:** -	**Expert list:** 1
Min	**Max**	**Factory setting**
-	-	-

Description: Displays the PZD sent via interface 2 (actual values) with double word format.

Index:
[0] = PZD 1 + 2
[1] = PZD 2 + 3
[2] = PZD 3 + 4
[3] = PZD 4 + 5
[4] = PZD 5 + 6
[5] = PZD 6 + 7
[6] = PZD 7 + 8
[7] = PZD 8 + 9
[8] = PZD 9 + 10
[9] = PZD 10 + 11
[10] = PZD 11 + 12
[11] = PZD 12 + 13
[12] = PZD 13 + 14
[13] = PZD 14 + 15
[14] = PZD 15 + 16
[15] = PZD 16 + 17
[16] = PZD 17 + 18
[17] = PZD 18 + 19
[18] = PZD 19 + 20
[19] = PZD 20 + 21
[20] = PZD 21 + 22
[21] = PZD 22 + 23
[22] = PZD 23 + 24
[23] = PZD 24 + 25
[24] = PZD 25 + 26
[25] = PZD 26 + 27
[26] = PZD 27 + 28
[27] = PZD 28 + 29
[28] = PZD 29 + 30
[29] = PZD 30 + 31
[30] = PZD 31 + 32

Bit field:

Bit	Signal name	1 signal	0 signal	FP
00	Bit 0	ON	OFF	-
01	Bit 1	ON	OFF	-
02	Bit 2	ON	OFF	-
03	Bit 3	ON	OFF	-
04	Bit 4	ON	OFF	-
05	Bit 5	ON	OFF	-
06	Bit 6	ON	OFF	-
07	Bit 7	ON	OFF	-
08	Bit 8	ON	OFF	-
09	Bit 9	ON	OFF	-
10	Bit 10	ON	OFF	-
11	Bit 11	ON	OFF	-
12	Bit 12	ON	OFF	-
13	Bit 13	ON	OFF	-
14	Bit 14	ON	OFF	-

© Siemens AG 2012 All Rights Reserved

15	Bit 15	ON	OFF	-
16	Bit 16	ON	OFF	-
17	Bit 17	ON	OFF	-
18	Bit 18	ON	OFF	-
19	Bit 19	ON	OFF	-
20	Bit 20	ON	OFF	-
21	Bit 21	ON	OFF	-
22	Bit 22	ON	OFF	-
23	Bit 23	ON	OFF	-
24	Bit 24	ON	OFF	-
25	Bit 25	ON	OFF	-
26	Bit 26	ON	OFF	-
27	Bit 27	ON	OFF	-
28	Bit 28	ON	OFF	-
29	Bit 29	ON	OFF	-
30	Bit 30	ON	OFF	-
31	Bit 31	ON	OFF	-

Notice: A maximum of 4 indices of the "trace" function can be used.

Note: IF2: Interface 2

r8867[0...1] IF2 PZD maximum interconnected / IF2 PZDmaxIntercon

B_INF, CU_G130_DP, CU_G130_PN, CU_G150_DP, CU_G150_PN, ENC, TB30, TM150, TM31, VECTOR_G

Can be changed: - **Calculated:** - **Access level:** 3
Data type: Unsigned16 **Dynamic index:** - **Func. diagram:** -
P-Group: Communications **Units group:** - **Unit selection:** -
Not for motor type: - **Scaling:** - **Expert list:** 1

Min	Max	Factory setting
-	-	-

Description: Display for the maximum interconnected PZD in the receive/send direction
Index 0: receive (r8850, r8860)
Index 1: send (p8851, p8861)

p8870[0...15] SINAMICS Link receive telegram word PZD / Recv link word

B_INF (PROFINET), CU_G130_DP (PROFINET), CU_G130_PN (PROFINET), CU_G150_DP (PROFINET), CU_G150_PN (PROFINET), ENC (PROFINET), TB30 (PROFINET), TM150 (PROFINET), TM31 (PROFINET), VECTOR_G (PROFINET)

Can be changed: T **Calculated:** - **Access level:** 3
Data type: Unsigned16 **Dynamic index:** - **Func. diagram:** -
P-Group: Communications **Units group:** - **Unit selection:** -
Not for motor type: - **Scaling:** - **Expert list:** 1

Min	Max	Factory setting
0	16	0

Description: Assignment of a PZD to a telegram word from a SINAMICS Link receive telegram.
PZD p2050[index] is assigned by means of p8870[index], p8872[index].

Index:
[0] = PZD 1
[1] = PZD 2
[2] = PZD 3
[3] = PZD 4
[4] = PZD 5
[5] = PZD 6

© Siemens AG 2012 All Rights Reserved

[6] = PZD 7
[7] = PZD 8
[8] = PZD 9
[9] = PZD 10
[10] = PZD 11
[11] = PZD 12
[12] = PZD 13
[13] = PZD 14
[14] = PZD 15
[15] = PZD 16

Dependency: Refer to: p8872

Note: Value range:
0: Not used
1 ... 16: Telegram word
A pair of values p8870[index], p8872[index] may only be used once in single a device.
A change only becomes effective after POWER ON, reset, project download or p8842 = 1.

p8871[0...15] SINAMICS Link send telegram word PZD / Send link word

B_INF (PROFINET), CU_G130_DP (PROFINET), CU_G130_PN (PROFINET), CU_G150_DP (PROFINET), CU_G150_PN (PROFINET), ENC (PROFINET), TB30 (PROFINET), TM150 (PROFINET), TM31 (PROFINET), VECTOR_G (PROFINET)

Can be changed: T	**Calculated:** -	**Access level:** 3
Data type: Unsigned16	**Dynamic index:** -	**Func. diagram:** -
P-Group: Communications	**Units group:** -	**Unit selection:** -
Not for motor type: -	**Scaling:** -	**Expert list:** 1

Min	Max	Factory setting
0	16	0

Description: Assigns a PZD to a telegram word in the SINAMICS Link send telegram.
p8871[index] assigns PZD p2051[index].

Index: [0] = PZD 1
[1] = PZD 2
[2] = PZD 3
[3] = PZD 4
[4] = PZD 5
[5] = PZD 6
[6] = PZD 7
[7] = PZD 8
[8] = PZD 9
[9] = PZD 10
[10] = PZD 11
[11] = PZD 12
[12] = PZD 13
[13] = PZD 14
[14] = PZD 15
[15] = PZD 16

Dependency: Refer to: p2051, p8851
Refer to: A50002

Note: Value range:
0: Not used
1 ... 16: Send telegram word

© Siemens AG 2012 All Rights Reserved

A specific telegram word send may only be used once within a single device.
A change only becomes effective after POWER ON, reset, project download or p8842 = 1.

p8872[0...15] SINAMICS Link address receive PZD / Link addr recv

B_INF (PROFINET), CU_G130_DP (PROFINET), CU_G130_PN (PROFINET), CU_G150_DP (PROFINET), CU_G150_PN (PROFINET), ENC (PROFINET), TB30 (PROFINET), TM150 (PROFINET), TM31 (PROFINET), VECTOR_G (PROFINET)

Can be changed: T	**Calculated:** -	**Access level:** 3
Data type: Unsigned16	**Dynamic index:** -	**Func. diagram:** -
P-Group: Communications	**Units group:** -	**Unit selection:** -
Not for motor type: -	**Scaling:** -	**Expert list:** 1

Min	Max	Factory setting
0	64	0

Description: Selects the address of the SINAMICS Link sender from which the process data (PZD) is received.

Index:
[0] = PZD 1
[1] = PZD 2
[2] = PZD 3
[3] = PZD 4
[4] = PZD 5
[5] = PZD 6
[6] = PZD 7
[7] = PZD 8
[8] = PZD 9
[9] = PZD 10
[10] = PZD 11
[11] = PZD 12
[12] = PZD 13
[13] = PZD 14
[14] = PZD 15
[15] = PZD 16

Dependency: Refer to: p8870

Note: Value range:
0: Not used
1 ... 64: Address
A change only becomes effective after POWER ON, reset, project download or p8842 = 1.

r8874[0...9] IF2 diagnostics bus address PZD receive / IF2 diag addr recv

B_INF

Can be changed: -	**Calculated:** -	**Access level:** 3
Data type: Unsigned16	**Dynamic index:** -	**Func. diagram:** -
P-Group: Communications	**Units group:** -	**Unit selection:** -
Not for motor type: -	**Scaling:** -	**Expert list:** 1

Min	Max	Factory setting
-	-	-

Description: Displays the bus address of sender from which the PZD is received.

Index:
[0] = PZD 1
[1] = PZD 2
[2] = PZD 3
[3] = PZD 4
[4] = PZD 5
[5] = PZD 6
[6] = PZD 7

© Siemens AG 2012 All Rights Reserved

[7] = PZD 8
[8] = PZD 9
[9] = PZD 10

r8874[0...19] IF2 diagnostics bus address PZD receive / IF2 diag addr recv

CU_G130_DP, CU_G130_PN, CU_G150_DP, CU_G150_PN

Can be changed: -	**Calculated:** -	**Access level:** 3
Data type: Unsigned16	**Dynamic index:** -	**Func. diagram:** -
P-Group: Communications	**Units group:** -	**Unit selection:** -
Not for motor type: -	**Scaling:** -	**Expert list:** 1
Min	**Max**	**Factory setting**
-	-	-

Description: Displays the bus address of sender from which the PZD is received.

Index:
[0] = PZD 1
[1] = PZD 2
[2] = PZD 3
[3] = PZD 4
[4] = PZD 5
[5] = PZD 6
[6] = PZD 7
[7] = PZD 8
[8] = PZD 9
[9] = PZD 10
[10] = PZD 11
[11] = PZD 12
[12] = PZD 13
[13] = PZD 14
[14] = PZD 15
[15] = PZD 16
[16] = PZD 17
[17] = PZD 18
[18] = PZD 19
[19] = PZD 20

r8874[0...3] IF2 diagnostics bus address PZD receive / IF2 diag addr recv

ENC

Can be changed: -	**Calculated:** -	**Access level:** 3
Data type: Unsigned16	**Dynamic index:** -	**Func. diagram:** -
P-Group: Communications	**Units group:** -	**Unit selection:** -
Not for motor type: -	**Scaling:** -	**Expert list:** 1
Min	**Max**	**Factory setting**
-	-	-

Description: Displays the bus address of sender from which the PZD is received.

Index:
[0] = PZD 1
[1] = PZD 2
[2] = PZD 3
[3] = PZD 4

Note: IF2: Interface 2
Value range:
0 - 125: Bus address of the sender
255: Not assigned

© Siemens AG 2012 All Rights Reserved

r8874[0...4] IF2 diagnostics bus address PZD receive / IF2 diag addr recv

TB30, TM150, TM31	**Can be changed:** -	**Calculated:** -	**Access level:** 3
	Data type: Unsigned16	**Dynamic index:** -	**Func. diagram:** -
	P-Group: Communications	**Units group:** -	**Unit selection:** -
	Not for motor type: -	**Scaling:** -	**Expert list:** 1
	Min	**Max**	**Factory setting**
	-	-	-

Description: Displays the bus address of sender from which the PZD is received.

Index:
[0] = PZD 1
[1] = PZD 2
[2] = PZD 3
[3] = PZD 4
[4] = PZD 5

r8874[0...31] IF2 diagnostics bus address PZD receive / IF2 diag addr recv

VECTOR_G	**Can be changed:** -	**Calculated:** -	**Access level:** 3
	Data type: Unsigned16	**Dynamic index:** -	**Func. diagram:** -
	P-Group: Communications	**Units group:** -	**Unit selection:** -
	Not for motor type: -	**Scaling:** -	**Expert list:** 1
	Min	**Max**	**Factory setting**
	-	-	-

Description: Displays the bus address of sender from which the PZD is received.

Index:
[0] = PZD 1
[1] = PZD 2
[2] = PZD 3
[3] = PZD 4
[4] = PZD 5
[5] = PZD 6
[6] = PZD 7
[7] = PZD 8
[8] = PZD 9
[9] = PZD 10
[10] = PZD 11
[11] = PZD 12
[12] = PZD 13
[13] = PZD 14
[14] = PZD 15
[15] = PZD 16
[16] = PZD 17
[17] = PZD 18
[18] = PZD 19
[19] = PZD 20
[20] = PZD 21
[21] = PZD 22
[22] = PZD 23
[23] = PZD 24
[24] = PZD 25
[25] = PZD 26
[26] = PZD 27
[27] = PZD 28
[28] = PZD 29
[29] = PZD 30
[30] = PZD 31
[31] = PZD 32

Note: IF2: Interface 2

Value range:

0 - 125: Bus address of the sender

255: Not assigned

© Siemens AG 2012 All Rights Reserved

r8875[0...9] IF2 diagnostics telegram offset PZD receive / IF diag offs recv

B_INF

Can be changed: -	**Calculated:** -	**Access level:** 3
Data type: Unsigned16	**Dynamic index:** -	**Func. diagram:** -
P-Group: Communications	**Units group:** -	**Unit selection:** -
Not for motor type: -	**Scaling:** -	**Expert list:** 1
Min	**Max**	**Factory setting**
-	-	-

Description: Displays the byte offset of the PZD in the receive telegram.

Index:
[0] = PZD 1
[1] = PZD 2
[2] = PZD 3
[3] = PZD 4
[4] = PZD 5
[5] = PZD 6
[6] = PZD 7
[7] = PZD 8
[8] = PZD 9
[9] = PZD 10

r8875[0...19] IF2 diagnostics telegram offset PZD receive / IF diag offs recv

CU_G130_DP, CU_G130_PN, CU_G150_DP, CU_G150_PN

Can be changed: -	**Calculated:** -	**Access level:** 3
Data type: Unsigned16	**Dynamic index:** -	**Func. diagram:** -
P-Group: Communications	**Units group:** -	**Unit selection:** -
Not for motor type: -	**Scaling:** -	**Expert list:** 1
Min	**Max**	**Factory setting**
-	-	-

Description: Displays the byte offset of the PZD in the receive telegram.

Index:
[0] = PZD 1
[1] = PZD 2
[2] = PZD 3
[3] = PZD 4
[4] = PZD 5
[5] = PZD 6
[6] = PZD 7
[7] = PZD 8
[8] = PZD 9
[9] = PZD 10
[10] = PZD 11
[11] = PZD 12
[12] = PZD 13
[13] = PZD 14
[14] = PZD 15
[15] = PZD 16
[16] = PZD 17
[17] = PZD 18
[18] = PZD 19
[19] = PZD 20

r8875[0...3] IF2 diagnostics telegram offset PZD receive / IF diag offs recv

ENC

Can be changed: -	**Calculated:** -	**Access level:** 3
Data type: Unsigned16	**Dynamic index:** -	**Func. diagram:** -
P-Group: Communications	**Units group:** -	**Unit selection:** -
Not for motor type: -	**Scaling:** -	**Expert list:** 1
Min	**Max**	**Factory setting**
-	-	-

Description: Displays the byte offset of the PZD in the receive telegram.

© Siemens AG 2012 All Rights Reserved

Index: [0] = PZD 1
[1] = PZD 2
[2] = PZD 3
[3] = PZD 4

Note: IF2: Interface 2
Value range:
0 - 242: Byte offset
255: Not assigned

r8875[0...4] IF2 diagnostics telegram offset PZD receive / IF diag offs recv

TB30, TM150, TM31

Can be changed: -	**Calculated:** -	**Access level:** 3
Data type: Unsigned16	**Dynamic index:** -	**Func. diagram:** -
P-Group: Communications	**Units group:** -	**Unit selection:** -
Not for motor type: -	**Scaling:** -	**Expert list:** 1
Min	**Max**	**Factory setting**
-	-	-

Description: Displays the byte offset of the PZD in the receive telegram.

Index: [0] = PZD 1
[1] = PZD 2
[2] = PZD 3
[3] = PZD 4
[4] = PZD 5

r8875[0...31] IF2 diagnostics telegram offset PZD receive / IF diag offs recv

VECTOR_G

Can be changed: -	**Calculated:** -	**Access level:** 3
Data type: Unsigned16	**Dynamic index:** -	**Func. diagram:** -
P-Group: Communications	**Units group:** -	**Unit selection:** -
Not for motor type: -	**Scaling:** -	**Expert list:** 1
Min	**Max**	**Factory setting**
-	-	-

Description: Displays the byte offset of the PZD in the receive telegram.

Index: [0] = PZD 1
[1] = PZD 2
[2] = PZD 3
[3] = PZD 4
[4] = PZD 5
[5] = PZD 6
[6] = PZD 7
[7] = PZD 8
[8] = PZD 9
[9] = PZD 10
[10] = PZD 11
[11] = PZD 12
[12] = PZD 13
[13] = PZD 14
[14] = PZD 15
[15] = PZD 16
[16] = PZD 17
[17] = PZD 18
[18] = PZD 19
[19] = PZD 20
[20] = PZD 21
[21] = PZD 22
[22] = PZD 23
[23] = PZD 24
[24] = PZD 25
[25] = PZD 26
[26] = PZD 27
[27] = PZD 28

© Siemens AG 2012 All Rights Reserved

[28] = PZD 29
[29] = PZD 30
[30] = PZD 31
[31] = PZD 32

Note: IF2: Interface 2
Value range:
0 - 242: Byte offset
255: Not assigned

r8876[0...9] IF2 diagnostics telegram offset PZD send / IF2 diag offs send

B_INF

Can be changed: -	**Calculated:** -	**Access level:** 3
Data type: Unsigned16	**Dynamic index:** -	**Func. diagram:** -
P-Group: Communications	**Units group:** -	**Unit selection:** -
Not for motor type: -	**Scaling:** -	**Expert list:** 1
Min	**Max**	**Factory setting**
-	-	-

Description: Displays the byte offset of the PZD in the send telegram.

Index:
[0] = PZD 1
[1] = PZD 2
[2] = PZD 3
[3] = PZD 4
[4] = PZD 5
[5] = PZD 6
[6] = PZD 7
[7] = PZD 8
[8] = PZD 9
[9] = PZD 10

r8876[0...24] IF2 diagnostics telegram offset PZD send / IF2 diag offs send

CU_G130_DP, CU_G130_PN, CU_G150_DP, CU_G150_PN

Can be changed: -	**Calculated:** -	**Access level:** 3
Data type: Unsigned16	**Dynamic index:** -	**Func. diagram:** -
P-Group: Communications	**Units group:** -	**Unit selection:** -
Not for motor type: -	**Scaling:** -	**Expert list:** 1
Min	**Max**	**Factory setting**
-	-	-

Description: Displays the byte offset of the PZD in the send telegram.

Index:
[0] = PZD 1
[1] = PZD 2
[2] = PZD 3
[3] = PZD 4
[4] = PZD 5
[5] = PZD 6
[6] = PZD 7
[7] = PZD 8
[8] = PZD 9
[9] = PZD 10
[10] = PZD 11
[11] = PZD 12
[12] = PZD 13
[13] = PZD 14
[14] = PZD 15
[15] = PZD 16
[16] = PZD 17
[17] = PZD 18
[18] = PZD 19
[19] = PZD 20
[20] = PZD 21
[21] = PZD 22
[22] = PZD 23

© Siemens AG 2012 All Rights Reserved

[23] = PZD 24
[24] = PZD 25

r8876[0...11] IF2 diagnostics telegram offset PZD send / IF2 diag offs send

ENC	**Can be changed:** -	**Calculated:** -	**Access level:** 3
	Data type: Unsigned16	**Dynamic index:** -	**Func. diagram:** -
	P-Group: Communications	**Units group:** -	**Unit selection:** -
	Not for motor type: -	**Scaling:** -	**Expert list:** 1
	Min	**Max**	**Factory setting**
	-	-	-

Description: Displays the byte offset of the PZD in the send telegram.

Index:
[0] = PZD 1
[1] = PZD 2
[2] = PZD 3
[3] = PZD 4
[4] = PZD 5
[5] = PZD 6
[6] = PZD 7
[7] = PZD 8
[8] = PZD 9
[9] = PZD 10
[10] = PZD 11
[11] = PZD 12

Note: IF2: Interface 2
Value range:
0 - 242: Byte offset
255: Not assigned

r8876[0...4] IF2 diagnostics telegram offset PZD send / IF2 diag offs send

TB30, TM150, TM31	**Can be changed:** -	**Calculated:** -	**Access level:** 3
	Data type: Unsigned16	**Dynamic index:** -	**Func. diagram:** -
	P-Group: Communications	**Units group:** -	**Unit selection:** -
	Not for motor type: -	**Scaling:** -	**Expert list:** 1
	Min	**Max**	**Factory setting**
	-	-	-

Description: Displays the byte offset of the PZD in the send telegram.

Index:
[0] = PZD 1
[1] = PZD 2
[2] = PZD 3
[3] = PZD 4
[4] = PZD 5

r8876[0...31] IF2 diagnostics telegram offset PZD send / IF2 diag offs send

VECTOR_G	**Can be changed:** -	**Calculated:** -	**Access level:** 3
	Data type: Unsigned16	**Dynamic index:** -	**Func. diagram:** -
	P-Group: Communications	**Units group:** -	**Unit selection:** -
	Not for motor type: -	**Scaling:** -	**Expert list:** 1
	Min	**Max**	**Factory setting**
	-	-	-

Description: Displays the byte offset of the PZD in the send telegram.

Index:
[0] = PZD 1
[1] = PZD 2
[2] = PZD 3
[3] = PZD 4
[4] = PZD 5
[5] = PZD 6
[6] = PZD 7

© Siemens AG 2012 All Rights Reserved

[7] = PZD 8
[8] = PZD 9
[9] = PZD 10
[10] = PZD 11
[11] = PZD 12
[12] = PZD 13
[13] = PZD 14
[14] = PZD 15
[15] = PZD 16
[16] = PZD 17
[17] = PZD 18
[18] = PZD 19
[19] = PZD 20
[20] = PZD 21
[21] = PZD 22
[22] = PZD 23
[23] = PZD 24
[24] = PZD 25
[25] = PZD 26
[26] = PZD 27
[27] = PZD 28
[28] = PZD 29
[29] = PZD 30
[30] = PZD 31
[31] = PZD 32

Note: IF2: Interface 2
Value range:
0 - 242: Byte offset
255: Not assigned

p8880[0...15] BI: IF2 binector-connector converter status word 1 / Bin/con ZSW1

B_INF, CU_G130_DP, CU_G130_PN, CU_G150_DP, CU_G150_PN, ENC, VECTOR_G	**Can be changed:** U, T	**Calculated:** -	**Access level:** 3
	Data type: Unsigned32 / Binary	**Dynamic index:** -	**Func. diagram:** 2489
	P-Group: Communications	**Units group:** -	**Unit selection:** -
	Not for motor type: -	**Scaling:** -	**Expert list:** 1
	Min	**Max**	**Factory setting**
	-	-	0

Description: Selects bits to be sent via interface 2.
The individual bits are combined to form status word 1.

Index: [0] = Bit 0
[1] = Bit 1
[2] = Bit 2
[3] = Bit 3
[4] = Bit 4
[5] = Bit 5
[6] = Bit 6
[7] = Bit 7
[8] = Bit 8
[9] = Bit 9
[10] = Bit 10
[11] = Bit 11
[12] = Bit 12
[13] = Bit 13
[14] = Bit 14
[15] = Bit 15

Dependency: Refer to: p8888, r8889

© Siemens AG 2012 All Rights Reserved

p8881[0...15] BI: IF2 binector-connector converter status word 2 / Bin/con ZSW2

B_INF, CU_G130_DP, CU_G130_PN, CU_G150_DP, CU_G150_PN, ENC, VECTOR_G	**Can be changed:** U, T	**Calculated:** -	**Access level:** 3
	Data type: Unsigned32 / Binary	**Dynamic index:** -	**Func. diagram:** 2489
	P-Group: Communications	**Units group:** -	**Unit selection:** -
	Not for motor type: -	**Scaling:** -	**Expert list:** 1
	Min	**Max**	**Factory setting**
	-	-	0

Description: Selects bits to be sent via interface 2.
The individual bits are combined to form status word 2.

Index:
[0] = Bit 0
[1] = Bit 1
[2] = Bit 2
[3] = Bit 3
[4] = Bit 4
[5] = Bit 5
[6] = Bit 6
[7] = Bit 7
[8] = Bit 8
[9] = Bit 9
[10] = Bit 10
[11] = Bit 11
[12] = Bit 12
[13] = Bit 13
[14] = Bit 14
[15] = Bit 15

Dependency: Refer to: p8888, r8889

p8882[0...15] BI: IF2 binector-connector converter status word 3 / Bin/con ZSW3

B_INF, CU_G130_DP, CU_G130_PN, CU_G150_DP, CU_G150_PN, ENC, VECTOR_G	**Can be changed:** U, T	**Calculated:** -	**Access level:** 3
	Data type: Unsigned32 / Binary	**Dynamic index:** -	**Func. diagram:** 2489
	P-Group: Communications	**Units group:** -	**Unit selection:** -
	Not for motor type: -	**Scaling:** -	**Expert list:** 1
	Min	**Max**	**Factory setting**
	-	-	0

Description: Selects bits to be sent via interface 2.
The individual bits are combined to form free status word 3.

Index:
[0] = Bit 0
[1] = Bit 1
[2] = Bit 2
[3] = Bit 3
[4] = Bit 4
[5] = Bit 5
[6] = Bit 6
[7] = Bit 7
[8] = Bit 8
[9] = Bit 9
[10] = Bit 10
[11] = Bit 11
[12] = Bit 12
[13] = Bit 13
[14] = Bit 14
[15] = Bit 15

Dependency: Refer to: p8888, r8889

© Siemens AG 2012 All Rights Reserved

p8883[0...15] BI: IF2 binector-connector converter status word 4 / Bin/con ZSW4

B_INF, CU_G130_DP, CU_G130_PN, CU_G150_DP, CU_G150_PN, ENC, VECTOR_G	**Can be changed:** U, T	**Calculated:** -	**Access level:** 3
	Data type: Unsigned32 / Binary	**Dynamic index:** -	**Func. diagram:** 2489
	P-Group: Communications	**Units group:** -	**Unit selection:** -
	Not for motor type: -	**Scaling:** -	**Expert list:** 1
	Min	**Max**	**Factory setting**
	-	-	0

Description: Selects bits to be sent via interface 2.
The individual bits are combined to form free status word 4.

Index:
[0] = Bit 0
[1] = Bit 1
[2] = Bit 2
[3] = Bit 3
[4] = Bit 4
[5] = Bit 5
[6] = Bit 6
[7] = Bit 7
[8] = Bit 8
[9] = Bit 9
[10] = Bit 10
[11] = Bit 11
[12] = Bit 12
[13] = Bit 13
[14] = Bit 14
[15] = Bit 15

Dependency: Refer to: p8888, r8889

p8884[0...15] BI: IF2 binector-connector converter status word 5 / Bin/con ZSW5

B_INF, CU_G130_DP, CU_G130_PN, CU_G150_DP, CU_G150_PN, ENC, VECTOR_G	**Can be changed:** U, T	**Calculated:** -	**Access level:** 3
	Data type: Unsigned32 / Binary	**Dynamic index:** -	**Func. diagram:** 2489
	P-Group: Communications	**Units group:** -	**Unit selection:** -
	Not for motor type: -	**Scaling:** -	**Expert list:** 1
	Min	**Max**	**Factory setting**
	-	-	0

Description: Selects bits to be sent via interface 2.
The individual bits are combined to form free status word 5.

Index:
[0] = Bit 0
[1] = Bit 1
[2] = Bit 2
[3] = Bit 3
[4] = Bit 4
[5] = Bit 5
[6] = Bit 6
[7] = Bit 7
[8] = Bit 8
[9] = Bit 9
[10] = Bit 10
[11] = Bit 11
[12] = Bit 12
[13] = Bit 13
[14] = Bit 14
[15] = Bit 15

Dependency: Refer to: p8888, r8889

© Siemens AG 2012 All Rights Reserved

p8888[0...4] IF2 invert binector-connector converter status word / Bin/con ZSW inv

B_INF, CU_G130_DP, CU_G130_PN, CU_G150_DP, CU_G150_PN, ENC, VECTOR_G

Can be changed: U, T | **Calculated:** - | **Access level:** 3
Data type: Unsigned16 | **Dynamic index:** - | **Func. diagram:** 2489
P-Group: Communications | **Units group:** - | **Unit selection:** -
Not for motor type: - | **Scaling:** - | **Expert list:** 1

Min	Max	Factory setting
-	-	0000 0000 0000 0000 bin

Description: Setting to invert the individual binector inputs of the binector connector converter.

Index:
[0] = Status word 1
[1] = Status word 2
[2] = Free status word 3
[3] = Free status word 4
[4] = Free status word 5

Bit field:

Bit	Signal name	1 signal	0 signal	FP
00	Bit 0	Inverted	Not inverted	-
01	Bit 1	Inverted	Not inverted	-
02	Bit 2	Inverted	Not inverted	-
03	Bit 3	Inverted	Not inverted	-
04	Bit 4	Inverted	Not inverted	-
05	Bit 5	Inverted	Not inverted	-
06	Bit 6	Inverted	Not inverted	-
07	Bit 7	Inverted	Not inverted	-
08	Bit 8	Inverted	Not inverted	-
09	Bit 9	Inverted	Not inverted	-
10	Bit 10	Inverted	Not inverted	-
11	Bit 11	Inverted	Not inverted	-
12	Bit 12	Inverted	Not inverted	-
13	Bit 13	Inverted	Not inverted	-
14	Bit 14	Inverted	Not inverted	-
15	Bit 15	Inverted	Not inverted	-

Dependency: Refer to: p8880, p8881, p8882, p8883, p8884, r8889

r8889[0...4] CO: IF2 send binector-connector converter status word / Bin/con ZSW send

B_INF, CU_G130_DP, CU_G130_PN, CU_G150_DP, CU_G150_PN, ENC, VECTOR_G

Can be changed: - | **Calculated:** - | **Access level:** 3
Data type: Unsigned16 | **Dynamic index:** - | **Func. diagram:** -
P-Group: Communications | **Units group:** - | **Unit selection:** -
Not for motor type: - | **Scaling:** - | **Expert list:** 1

Min	Max	Factory setting
-	-	-

Description: Connector output to interconnect the status words to a PZD send word.

Index:
[0] = Status word 1
[1] = Status word 2
[2] = Free status word 3
[3] = Free status word 4
[4] = Free status word 5

Bit field:

Bit	Signal name	1 signal	0 signal	FP
00	Bit 0	ON	OFF	-
01	Bit 1	ON	OFF	-
02	Bit 2	ON	OFF	-
03	Bit 3	ON	OFF	-
04	Bit 4	ON	OFF	-
05	Bit 5	ON	OFF	-
06	Bit 6	ON	OFF	-
07	Bit 7	ON	OFF	-
08	Bit 8	ON	OFF	-

© Siemens AG 2012 All Rights Reserved

09	Bit 9	ON	OFF	-
10	Bit 10	ON	OFF	-
11	Bit 11	ON	OFF	-
12	Bit 12	ON	OFF	-
13	Bit 13	ON	OFF	-
14	Bit 14	ON	OFF	-
15	Bit 15	ON	OFF	-

Dependency: Refer to: p8851, p8880, p8881, p8882, p8883, p8884, p8888

Note: r8889 together with p8880 to p8884 forms five binector-connector converters.

r8890.0...15 BO: IF2 PZD1 receive bit-serial / IF2 PZD1 recv bitw

B_INF, CU_G130_DP, CU_G130_PN, CU_G150_DP, CU_G150_PN, ENC, TB30, TM150, TM31, VECTOR_G

Can be changed: - **Calculated:** - **Access level:** 3

Data type: Unsigned16 **Dynamic index:** - **Func. diagram:** 2485, 2491, 9204, 9206

P-Group: Communications **Units group:** - **Unit selection:** -

Not for motor type: - **Scaling:** - **Expert list:** 1

Min	Max	Factory setting
-	-	-

Description: Binector output for bit-serial interconnection of PZD1 (normally control word 1) received via interface 2.

Bit field:

Bit	Signal name	1 signal	0 signal	FP
00	Bit 0	ON	OFF	-
01	Bit 1	ON	OFF	-
02	Bit 2	ON	OFF	-
03	Bit 3	ON	OFF	-
04	Bit 4	ON	OFF	-
05	Bit 5	ON	OFF	-
06	Bit 6	ON	OFF	-
07	Bit 7	ON	OFF	-
08	Bit 8	ON	OFF	-
09	Bit 9	ON	OFF	-
10	Bit 10	ON	OFF	-
11	Bit 11	ON	OFF	-
12	Bit 12	ON	OFF	-
13	Bit 13	ON	OFF	-
14	Bit 14	ON	OFF	-
15	Bit 15	ON	OFF	-

Dependency: Refer to: r8850

Note: IF2: Interface 2

r8891.0...15 BO: IF2 PZD2 receive bit-serial / IF2 PZD2 recv bitw

B_INF, CU_G130_DP, CU_G130_PN, CU_G150_DP, CU_G150_PN, ENC, TB30, TM150, TM31, VECTOR_G

Can be changed: - **Calculated:** - **Access level:** 3

Data type: Unsigned16 **Dynamic index:** - **Func. diagram:** 2485, 2491, 9204, 9206

P-Group: Communications **Units group:** - **Unit selection:** -

Not for motor type: - **Scaling:** - **Expert list:** 1

Min	Max	Factory setting
-	-	-

Description: Binector output for bit-serial interconnection of PZD2 received via interface 2.

Bit field:

Bit	Signal name	1 signal	0 signal	FP
00	Bit 0	ON	OFF	-
01	Bit 1	ON	OFF	-
02	Bit 2	ON	OFF	-
03	Bit 3	ON	OFF	-
04	Bit 4	ON	OFF	-
05	Bit 5	ON	OFF	-

© Siemens AG 2012 All Rights Reserved

06	Bit 6	ON	OFF	-
07	Bit 7	ON	OFF	-
08	Bit 8	ON	OFF	-
09	Bit 9	ON	OFF	-
10	Bit 10	ON	OFF	-
11	Bit 11	ON	OFF	-
12	Bit 12	ON	OFF	-
13	Bit 13	ON	OFF	-
14	Bit 14	ON	OFF	-
15	Bit 15	ON	OFF	-

Dependency: Refer to: r8850

Note: IF2: Interface 2

r8892.0...15 BO: IF2 PZD3 receive bit-serial / IF2 PZD3 recv bitw

CU_G130_DP, CU_G130_PN, CU_G150_DP, CU_G150_PN, ENC, VECTOR_G

Can be changed: -	**Calculated:** -	**Access level:** 3
Data type: Unsigned16	**Dynamic index:** -	**Func. diagram:** 2485, 9204, 9206
P-Group: Communications	**Units group:** -	**Unit selection:** -
Not for motor type: -	**Scaling:** -	**Expert list:** 1
Min	**Max**	**Factory setting**
-	-	-

Description: Binector output for bit-serial interconnection of PZD3 received via interface 2.

Bit field:

Bit	Signal name	1 signal	0 signal	FP
00	Bit 0	ON	OFF	-
01	Bit 1	ON	OFF	-
02	Bit 2	ON	OFF	-
03	Bit 3	ON	OFF	-
04	Bit 4	ON	OFF	-
05	Bit 5	ON	OFF	-
06	Bit 6	ON	OFF	-
07	Bit 7	ON	OFF	-
08	Bit 8	ON	OFF	-
09	Bit 9	ON	OFF	-
10	Bit 10	ON	OFF	-
11	Bit 11	ON	OFF	-
12	Bit 12	ON	OFF	-
13	Bit 13	ON	OFF	-
14	Bit 14	ON	OFF	-
15	Bit 15	ON	OFF	-

Dependency: Refer to: r8850

Note: IF2: Interface 2

r8893.0...15 BO: IF2 PZD4 receive bit-serial / IF2 PZD4 recv bitw

CU_G130_DP, CU_G130_PN, CU_G150_DP, CU_G150_PN, ENC, VECTOR_G

Can be changed: -	**Calculated:** -	**Access level:** 3
Data type: Unsigned16	**Dynamic index:** -	**Func. diagram:** 2485, 9204, 9206
P-Group: Communications	**Units group:** -	**Unit selection:** -
Not for motor type: -	**Scaling:** -	**Expert list:** 1
Min	**Max**	**Factory setting**
-	-	-

Description: Binector output for bit-serial interconnection of PZD4 (normally control word 2) received via interface 2.

Bit field:

Bit	Signal name	1 signal	0 signal	FP
00	Bit 0	ON	OFF	-
01	Bit 1	ON	OFF	-
02	Bit 2	ON	OFF	-
03	Bit 3	ON	OFF	-
04	Bit 4	ON	OFF	-
05	Bit 5	ON	OFF	-

© Siemens AG 2012 All Rights Reserved

06	Bit 6	ON	OFF	-
07	Bit 7	ON	OFF	-
08	Bit 8	ON	OFF	-
09	Bit 9	ON	OFF	-
10	Bit 10	ON	OFF	-
11	Bit 11	ON	OFF	-
12	Bit 12	ON	OFF	-
13	Bit 13	ON	OFF	-
14	Bit 14	ON	OFF	-
15	Bit 15	ON	OFF	-

Dependency: Refer to: r8850

Note: IF2: Interface 2

r8894.0...15 BO: IF2 connector-binector converter binector output / Con/bin outp

B_INF, CU_G130_DP, CU_G130_PN, CU_G150_DP, CU_G150_PN, ENC, VECTOR_G

Can be changed: - **Calculated:** - **Access level:** 3
Data type: Unsigned16 **Dynamic index:** - **Func. diagram:** 2485, 2491
P-Group: Communications **Units group:** - **Unit selection:** -
Not for motor type: - **Scaling:** - **Expert list:** 1

Min	Max	Factory setting
-	-	-

Description: Binector output for bit-serial interconnection of a PZD word received via interface 2.
The PZD is selected via p8899[0].

Bit field:

Bit	Signal name	1 signal	0 signal	FP
00	Bit 0	ON	OFF	-
01	Bit 1	ON	OFF	-
02	Bit 2	ON	OFF	-
03	Bit 3	ON	OFF	-
04	Bit 4	ON	OFF	-
05	Bit 5	ON	OFF	-
06	Bit 6	ON	OFF	-
07	Bit 7	ON	OFF	-
08	Bit 8	ON	OFF	-
09	Bit 9	ON	OFF	-
10	Bit 10	ON	OFF	-
11	Bit 11	ON	OFF	-
12	Bit 12	ON	OFF	-
13	Bit 13	ON	OFF	-
14	Bit 14	ON	OFF	-
15	Bit 15	ON	OFF	-

Dependency: Refer to: p8899

r8895.0...15 BO: IF2 connector-binector converter binector output / Con/bin outp

B_INF, CU_G130_DP, CU_G130_PN, CU_G150_DP, CU_G150_PN, ENC, VECTOR_G

Can be changed: - **Calculated:** - **Access level:** 3
Data type: Unsigned16 **Dynamic index:** - **Func. diagram:** 2485, 2491
P-Group: Communications **Units group:** - **Unit selection:** -
Not for motor type: - **Scaling:** - **Expert list:** 1

Min	Max	Factory setting
-	-	-

Description: Binector output for bit-serial interconnection of a PZD word received via interface 2.
The PZD is selected via p8899[1].

Bit field:

Bit	Signal name	1 signal	0 signal	FP
00	Bit 0	ON	OFF	-
01	Bit 1	ON	OFF	-
02	Bit 2	ON	OFF	-
03	Bit 3	ON	OFF	-

© Siemens AG 2012 All Rights Reserved

04	Bit 4	ON	OFF	-
05	Bit 5	ON	OFF	-
06	Bit 6	ON	OFF	-
07	Bit 7	ON	OFF	-
08	Bit 8	ON	OFF	-
09	Bit 9	ON	OFF	-
10	Bit 10	ON	OFF	-
11	Bit 11	ON	OFF	-
12	Bit 12	ON	OFF	-
13	Bit 13	ON	OFF	-
14	Bit 14	ON	OFF	-
15	Bit 15	ON	OFF	-

Dependency: Refer to: p8898, p8899

p8898[0...1] IF2 invert connector-binector converter binector output / Con/bin outp inv

B_INF, CU_G130_DP, CU_G130_PN, CU_G150_DP, CU_G150_PN, ENC, VECTOR_G

Can be changed: U, T | **Calculated:** - | **Access level:** 3
Data type: Unsigned16 | **Dynamic index:** - | **Func. diagram:** 2485, 2491
P-Group: Communications | **Units group:** - | **Unit selection:** -
Not for motor type: - | **Scaling:** - | **Expert list:** 1

Min	Max	Factory setting
-	-	0000 0000 0000 0000 bin

Description: Setting to invert the individual binector outputs of the connector-binector converter.
Using p8898[0], the signals of CI: p8899[0] are influenced.
Using p8898[1], the signals of CI: p8899[1] are influenced.

Bit field:

Bit	Signal name	1 signal	0 signal	FP
00	Bit 0	Inverted	Not inverted	-
01	Bit 1	Inverted	Not inverted	-
02	Bit 2	Inverted	Not inverted	-
03	Bit 3	Inverted	Not inverted	-
04	Bit 4	Inverted	Not inverted	-
05	Bit 5	Inverted	Not inverted	-
06	Bit 6	Inverted	Not inverted	-
07	Bit 7	Inverted	Not inverted	-
08	Bit 8	Inverted	Not inverted	-
09	Bit 9	Inverted	Not inverted	-
10	Bit 10	Inverted	Not inverted	-
11	Bit 11	Inverted	Not inverted	-
12	Bit 12	Inverted	Not inverted	-
13	Bit 13	Inverted	Not inverted	-
14	Bit 14	Inverted	Not inverted	-
15	Bit 15	Inverted	Not inverted	-

Dependency: Refer to: r8894, r8895, p8899

p8899[0...1] CI: IF2 connector-binector converter signal source / Con/bin S_src

B_INF, CU_G130_DP, CU_G130_PN, CU_G150_DP, CU_G150_PN, ENC, VECTOR_G

Can be changed: U, T | **Calculated:** - | **Access level:** 3
Data type: Unsigned32 / Integer16 | **Dynamic index:** - | **Func. diagram:** 2485, 2491
P-Group: Communications | **Units group:** - | **Unit selection:** -
Not for motor type: - | **Scaling:** - | **Expert list:** 1

Min	Max	Factory setting
-	-	0

Description: Sets the signal source for the connector-binector converter.
A PZD receive word can be selected as signal source. The signals are available to be serially passed-on (interconnection).

Dependency: Refer to: r8850, r8894, r8895, p8898

© Siemens AG 2012 All Rights Reserved

Note: From the signal source set via the connector input, the corresponding lower 16 bits are converted.
p8899[0...1] together with r8894.0...15 and r8895.0...15 forms two connector-binector converters:
Connector input p8899[0] to binector output in r8894.0...15
Connector input p8899[1] to binector output in r8895.0...15

p8900[0...239] IE Name of Station / IE Name Stat

CU_G130_DP, CU_G130_PN, CU_G150_DP, CU_G150_PN

Can be changed: U, T	**Calculated:** -	**Access level:** 1
Data type: Unsigned8	**Dynamic index:** -	**Func. diagram:** -
P-Group: -	**Units group:** -	**Unit selection:** -
Not for motor type: -	**Scaling:** -	**Expert list:** 1
Min	**Max**	**Factory setting**
-	-	-

Description: Sets the station name for the Industrial Ethernet interface (X127) on the Control Unit.
The active station name is displayed in r8910.

Dependency: Refer to: p8905, r8910

Note: An ASCII table (excerpt) can be found, for example, in the appendix to the List Manual.
The interface configuration (p8900 and following) is activated with p8905 = 1.
The parameter is not influenced by setting the factory setting.
IE: Industrial Ethernet

p8901[0...3] IE IP Address of Station / IE IP of Stat

CU_G130_DP, CU_G130_PN, CU_G150_DP, CU_G150_PN

Can be changed: U, T	**Calculated:** -	**Access level:** 1
Data type: Unsigned8	**Dynamic index:** -	**Func. diagram:** -
P-Group: -	**Units group:** -	**Unit selection:** -
Not for motor type: -	**Scaling:** -	**Expert list:** 1
Min	**Max**	**Factory setting**
0	255	0

Description: Sets the IP address for the Industrial Ethernet interface (X127) on the Control Unit.
The active IP address is displayed in r8911.

Dependency: Refer to: p8905, r8911

Note: The interface configuration (p8900 and following) is activated with p8905 = 1.
The parameter is not influenced by setting the factory setting.

p8902[0...3] IE Default Gateway of Station / IE Def Gateway

CU_G130_DP, CU_G130_PN, CU_G150_DP, CU_G150_PN

Can be changed: U, T	**Calculated:** -	**Access level:** 1
Data type: Unsigned8	**Dynamic index:** -	**Func. diagram:** -
P-Group: -	**Units group:** -	**Unit selection:** -
Not for motor type: -	**Scaling:** -	**Expert list:** 1
Min	**Max**	**Factory setting**
0	255	0

Description: Sets the default gateway for the Industrial Ethernet interface (X127) on the Control Unit.
The active default gateway is displayed in r8912.

Dependency: Refer to: p8905, r8912

Note: The interface configuration (p8900 and following) is activated with p8905 = 1.
The parameter is not influenced by setting the factory setting.

© Siemens AG 2012 All Rights Reserved

p8903[0...3] IE Subnet Mask of Station / IE Subnet Mask

CU_G130_DP, CU_G130_PN, CU_G150_DP, CU_G150_PN

Can be changed: U, T	**Calculated:** -	**Access level:** 1
Data type: Unsigned8	**Dynamic index:** -	**Func. diagram:** -
P-Group: -	**Units group:** -	**Unit selection:** -
Not for motor type: -	**Scaling:** -	**Expert list:** 1
Min	**Max**	**Factory setting**
0	255	0

Description: Sets the subnet mask for the Industrial Ethernet interface (X127) on the Control Unit.
The active subnet mask is displayed in r8913.

Dependency: Refer to: p8905, r8913

Note: The interface configuration (p8900 and following) is activated with p8905 = 1.
The parameter is not influenced by setting the factory setting.

p8904 IE DHCP mode / IE DHCP mode

CU_G130_DP, CU_G130_PN, CU_G150_DP, CU_G150_PN

Can be changed: U, T	**Calculated:** -	**Access level:** 1
Data type: Unsigned8	**Dynamic index:** -	**Func. diagram:** -
P-Group: -	**Units group:** -	**Unit selection:** -
Not for motor type: -	**Scaling:** -	**Expert list:** 1
Min	**Max**	**Factory setting**
0	3	0

Description: Sets the DHCP mode for the Industrial Ethernet interface (X127) on the Control Unit.

Note: The interface configuration (p8900 and following) is activated with p8905 = 1.
The parameter is not influenced by setting the factory setting.
If value = 0:
DHCP deactivated.
If value = 2:
DHCP activated.
Re value = 1, 3:
Reserved.

p8905 IE Interface configuration / IE IF config

CU_G130_DP, CU_G130_PN, CU_G150_DP, CU_G150_PN

Can be changed: U, T	**Calculated:** -	**Access level:** 1
Data type: Integer16	**Dynamic index:** -	**Func. diagram:** -
P-Group: -	**Units group:** -	**Unit selection:** -
Not for motor type: -	**Scaling:** -	**Expert list:** 1
Min	**Max**	**Factory setting**
0	3	0

Description: Setting to activate the interface configuration for the Industrial Ethernet interface (X127) on the Control Unit.
p8905 is automatically set to 0 at the end of an operation.

Value:
0: No function
1: Activate configuration
2: Activate and save configuration
3: Delete configuration

Dependency: Refer to: p8900, p8901, p8902, p8903
Refer to: A08561

Note: Re p8905 = 1:
The interface configuration (p8900 and following) is activated.
Re p8905 = 2:
The interface configuration (p8900 and following) is activated and saved to non-volatile memory.
Re p8905 = 3:
The interface configuration is reset to the factory setting at all points.
The factory settings for the interface configuration are loaded on activation (p8905 = 1) or at the next POWER ON.

© Siemens AG 2012 All Rights Reserved

p8908 Activate FTP / Act FTP

CU_G130_DP, CU_G130_PN, CU_G150_DP, CU_G150_PN

Can be changed: U, T	**Calculated:** -	**Access level:** 3
Data type: Integer16	**Dynamic index:** -	**Func. diagram:** -
P-Group: -	**Units group:** -	**Unit selection:** -
Not for motor type: -	**Scaling:** -	**Expert list:** 1
Min	**Max**	**Factory setting**
0	1	0

Description: Activation of the FTP server.
Permits the FTP access to the /INSTALL/SINAMICS directory of the memory card.

Value:
0: No
1: Yes

Note: Activation of the FTP server becomes effective immediately.
Deactivation only becomes effective after POWER ON of the Control Unit.
Before commissioning the system for the first time, the FTP server is activated independent of the parameter setting.

r8909 PN device ID / PN device ID

CU_G130_DP, CU_G130_PN, CU_G150_DP, CU_G150_PN

Can be changed: -	**Calculated:** -	**Access level:** 3
Data type: Unsigned16	**Dynamic index:** -	**Func. diagram:** -
P-Group: -	**Units group:** -	**Unit selection:** -
Not for motor type: -	**Scaling:** -	**Expert list:** 1
Min	**Max**	**Factory setting**
-	-	-

Description: Displays the PROFINET Device ID.
Every SINAMICS device type has its own PROFINET Device ID and its own PROFINET GSD.

Note: List of the SINAMICS Device IDs:
0501 hex: S120/S150
0504 hex: G130/G150
0505 hex: GM150
0509 hex: GL150
050A hex: DC MASTER
050B hex: SL150
050C hex: SM120
050E hex: S110
050F hex: G120P
0510 hex: G120C
0511 hex: G120
0512 hex: G120D

r8910[0...239] IE Name of Station active / IE Name Stat act

CU_G130_DP, CU_G130_PN, CU_G150_DP, CU_G150_PN

Can be changed: -	**Calculated:** -	**Access level:** 1
Data type: Unsigned8	**Dynamic index:** -	**Func. diagram:** -
P-Group: -	**Units group:** -	**Unit selection:** -
Not for motor type: -	**Scaling:** -	**Expert list:** 1
Min	**Max**	**Factory setting**
-	-	-

Description: Displays the active station name for the Industrial Ethernet interface (X127) on the Control Unit.

© Siemens AG 2012 All Rights Reserved

r8911[0...3] IE IP Address of Station active / IE IP of Stat act

CU_G130_DP, CU_G130_PN, CU_G150_DP, CU_G150_PN	**Can be changed:** -	**Calculated:** -	**Access level:** 1
	Data type: Unsigned8	**Dynamic index:** -	**Func. diagram:** -
	P-Group: -	**Units group:** -	**Unit selection:** -
	Not for motor type: -	**Scaling:** -	**Expert list:** 1
	Min	**Max**	**Factory setting**
	-	-	-

Description: Displays the active IP address for the Industrial Ethernet interface (X127) on the Control Unit.

r8912[0...3] IE Default Gateway of Station active / IE Def Gateway act

CU_G130_DP, CU_G130_PN, CU_G150_DP, CU_G150_PN	**Can be changed:** -	**Calculated:** -	**Access level:** 1
	Data type: Unsigned8	**Dynamic index:** -	**Func. diagram:** -
	P-Group: -	**Units group:** -	**Unit selection:** -
	Not for motor type: -	**Scaling:** -	**Expert list:** 1
	Min	**Max**	**Factory setting**
	-	-	-

Description: Displays the active default gateway for the Industrial Ethernet interface (X127) on the Control Unit.

r8913[0...3] IE Subnet Mask of Station active / IE Subnet Mask act

CU_G130_DP, CU_G130_PN, CU_G150_DP, CU_G150_PN	**Can be changed:** -	**Calculated:** -	**Access level:** 1
	Data type: Unsigned8	**Dynamic index:** -	**Func. diagram:** -
	P-Group: -	**Units group:** -	**Unit selection:** -
	Not for motor type: -	**Scaling:** -	**Expert list:** 1
	Min	**Max**	**Factory setting**
	-	-	-

Description: Displays the active subnet mask for the Industrial Ethernet interface (X127) on the Control Unit.

r8914 IE DHCP mode of station active / IE DHCP mode act

CU_G130_DP, CU_G130_PN, CU_G150_DP, CU_G150_PN	**Can be changed:** -	**Calculated:** -	**Access level:** 1
	Data type: Unsigned8	**Dynamic index:** -	**Func. diagram:** -
	P-Group: -	**Units group:** -	**Unit selection:** -
	Not for motor type: -	**Scaling:** -	**Expert list:** 1
	Min	**Max**	**Factory setting**
	-	-	-

Description: Displays the active DHCP mode for the Industrial Ethernet interface (X127) on the Control Unit.

r8915[0...5] IE MAC Address of Station / IE MAC of Station

CU_G130_DP, CU_G130_PN, CU_G150_DP, CU_G150_PN	**Can be changed:** -	**Calculated:** -	**Access level:** 1
	Data type: Unsigned8	**Dynamic index:** -	**Func. diagram:** -
	P-Group: -	**Units group:** -	**Unit selection:** -
	Not for motor type: -	**Scaling:** -	**Expert list:** 1
	Min	**Max**	**Factory setting**
	-	-	-

Description: Displays the MAC address for the Industrial Ethernet interface (X127) on the Control Unit.

© Siemens AG 2012 All Rights Reserved

p8920[0...239] PN Name of Station / PN Name Stat

CU_G130_PN, CU_G150_PN

Can be changed: U, T	**Calculated:** -	**Access level:** 3
Data type: Unsigned8	**Dynamic index:** -	**Func. diagram:** -
P-Group: -	**Units group:** -	**Unit selection:** -
Not for motor type: -	**Scaling:** -	**Expert list:** 1
Min	**Max**	**Factory setting**
-	-	-

Description: Sets the station name for the onboard PROFINET interface on the Control Unit.
The active station name is displayed in r8930.

Note: An ASCII table (excerpt) can be found, for example, in the appendix to the List Manual.
The interface configuration (p8920 and following) is activated with p8925 = 1.
The parameter is not influenced by setting the factory setting.
PN: PROFINET

p8921[0...3] PN IP address of station / PN IP of stat

CU_G130_PN, CU_G150_PN

Can be changed: U, T	**Calculated:** -	**Access level:** 3
Data type: Unsigned8	**Dynamic index:** -	**Func. diagram:** -
P-Group: -	**Units group:** -	**Unit selection:** -
Not for motor type: -	**Scaling:** -	**Expert list:** 1
Min	**Max**	**Factory setting**
0	255	0

Description: Sets the IP address for the onboard PROFINET interface on the Control Unit.
The active IP address is displayed in r8931.

Note: The interface configuration (p8920 and following) is activated with p8925 = 1.
The parameter is not influenced by setting the factory setting.

p8922[0...3] PN Default Gateway of Station / PN Def Gateway

CU_G130_PN, CU_G150_PN

Can be changed: U, T	**Calculated:** -	**Access level:** 3
Data type: Unsigned8	**Dynamic index:** -	**Func. diagram:** -
P-Group: -	**Units group:** -	**Unit selection:** -
Not for motor type: -	**Scaling:** -	**Expert list:** 1
Min	**Max**	**Factory setting**
0	255	0

Description: Sets the default gateway for the onboard PROFINET interface on the Control Unit.
The active default gateway is displayed in r8932.

Note: The interface configuration (p8920 and following) is activated with p8925 = 1.
The parameter is not influenced by setting the factory setting.

p8923[0...3] PN Subnet Mask of Station / PN Subnet Mask

CU_G130_PN, CU_G150_PN

Can be changed: U, T	**Calculated:** -	**Access level:** 3
Data type: Unsigned8	**Dynamic index:** -	**Func. diagram:** -
P-Group: -	**Units group:** -	**Unit selection:** -
Not for motor type: -	**Scaling:** -	**Expert list:** 1
Min	**Max**	**Factory setting**
0	255	0

Description: Sets the subnet mask for the onboard PROFINET interface on the Control Unit.
The active subnet mask is displayed in r8933.

Note: The interface configuration (p8920 and following) is activated with p8925 = 1.
The parameter is not influenced by setting the factory setting.

© Siemens AG 2012 All Rights Reserved

p8925 PN interface configuration / PN IF config

CU_G130_PN, CU_G150_PN

Can be changed: U, T	**Calculated:** -	**Access level:** 3
Data type: Integer16	**Dynamic index:** -	**Func. diagram:** -
P-Group: -	**Units group:** -	**Unit selection:** -
Not for motor type: -	**Scaling:** -	**Expert list:** 1
Min	**Max**	**Factory setting**
0	3	0

Description: Setting to activate the interface configuration for the onboard PROFINET interface on the Control Unit.
p8925 is automatically set to 0 at the end of the operation.

Value:
0: No function
1: Activate configuration
2: Activate and save configuration
3: Delete configuration

Note: Re p8925 = 1:
The interface configuration (p8920 and following) is activated.
Re p8925 = 2:
The interface configuration (p8920 and following) is activated and saved to non-volatile memory.
Re p8925 = 3:
Restores all memory locations for the interface configuration to the factory settings.
The factory settings for the interface configuration are loaded on activation (p8925 = 1) or at the next POWER ON.

p8929 PN remote controller number / PN rem ctrl num

CU_G130_PN, CU_G150_PN

Can be changed: C1(1)	**Calculated:** -	**Access level:** 3
Data type: Integer16	**Dynamic index:** -	**Func. diagram:** -
P-Group: Communications	**Units group:** -	**Unit selection:** -
Not for motor type: -	**Scaling:** -	**Expert list:** 1
Min	**Max**	**Factory setting**
1	2	1

Description: Sets the number of remote controllers expected for PROFINET onboard.
The "Shared Device" functionality is activated with a value = 2.
The drive is being accessed by two PROFINET controllers simultaneously:
- automation controller (SIMOTION or SIMATIC A-CPU).
- safety controller (SIMATIC F-CPU).

Value:
1: Automation or Safety
2: Automation and Safety

Notice: The F CPU may only use PROFIsafe telegrams.

Note: A change only becomes effective after POWER ON, reset or download.

r8930[0...239] PN Name of Station active / PN Name Stat act

CU_G130_PN, CU_G150_PN

Can be changed: -	**Calculated:** -	**Access level:** 3
Data type: Unsigned8	**Dynamic index:** -	**Func. diagram:** -
P-Group: -	**Units group:** -	**Unit selection:** -
Not for motor type: -	**Scaling:** -	**Expert list:** 1
Min	**Max**	**Factory setting**
-	-	-

Description: Displays the active station name for the onboard PROFINET interface on the Control Unit.

© Siemens AG 2012 All Rights Reserved

r8931[0...3] PN IP Address of Station active / PN IP of Stat act

CU_G130_PN, CU_G150_PN

Can be changed: -	**Calculated:** -	**Access level:** 3
Data type: Unsigned8	**Dynamic index:** -	**Func. diagram:** -
P-Group: -	**Units group:** -	**Unit selection:** -
Not for motor type: -	**Scaling:** -	**Expert list:** 1
Min	**Max**	**Factory setting**
-	-	-

Description: Displays the active IP address for the onboard PROFINET interface on the Control Unit.

r8932[0...3] PN Default Gateway of Station active / PN Def Gateway act

CU_G130_PN, CU_G150_PN

Can be changed: -	**Calculated:** -	**Access level:** 3
Data type: Unsigned8	**Dynamic index:** -	**Func. diagram:** -
P-Group: -	**Units group:** -	**Unit selection:** -
Not for motor type: -	**Scaling:** -	**Expert list:** 1
Min	**Max**	**Factory setting**
-	-	-

Description: Displays the active default gateway for the onboard PROFINET interface on the Control Unit.

r8933[0...3] PN Subnet Mask of Station active / PN Subnet Mask act

CU_G130_PN, CU_G150_PN

Can be changed: -	**Calculated:** -	**Access level:** 3
Data type: Unsigned8	**Dynamic index:** -	**Func. diagram:** -
P-Group: -	**Units group:** -	**Unit selection:** -
Not for motor type: -	**Scaling:** -	**Expert list:** 1
Min	**Max**	**Factory setting**
-	-	-

Description: Displays the active subnet mask for the onboard PROFINET interface on the Control Unit.

r8935[0...5] PN MAC Address of Station / PN MAC of Station

CU_G130_PN, CU_G150_PN

Can be changed: -	**Calculated:** -	**Access level:** 3
Data type: Unsigned8	**Dynamic index:** -	**Func. diagram:** -
P-Group: -	**Units group:** -	**Unit selection:** -
Not for motor type: -	**Scaling:** -	**Expert list:** 1
Min	**Max**	**Factory setting**
-	-	-

Description: Displays the MAC address for the onboard PROFINET interface on the Control Unit.

r8936[0...1] PN state cyclic connections / PN stat cyc conn

CU_G130_PN, CU_G150_PN

Can be changed: -	**Calculated:** -	**Access level:** 3
Data type: Integer16	**Dynamic index:** -	**Func. diagram:** -
P-Group: -	**Units group:** -	**Unit selection:** -
Not for motor type: -	**Scaling:** -	**Expert list:** 1
Min	**Max**	**Factory setting**
0	13	-

Description: Displays the state of the cyclic PROFINET connections.

For two connections (Shared Device) the display in the index depends on the sequence in which the connections are established.

Value:

0: Interrupted
1: Not connected
2: Connection starts to be established
3: Module information expected
4: Module information received
5: Module address expected

© Siemens AG 2012 All Rights Reserved

6: Module address received
7: Parameterization data expected
8: Parameterization data received
9: Evaluate parameterization data
10: Connection being established completion expected
11: Configured controller RUN expected
12: Configured controller STOP
13: Configured controller RUN

Dependency: Refer to: p8829

Note: If value = 10:
If the connection remains in this state, then when using PROFINET IRT the following can apply:
- topology error (incorrect port assignment).
- synchronization missing.

r8937[0...5] PN diagnostics / PN diag

CU_G130_PN, CU_G150_PN

Can be changed: -	**Calculated:** -	**Access level:** 3
Data type: Unsigned32	**Dynamic index:** -	**Func. diagram:** -
P-Group: -	**Units group:** -	**Unit selection:** -
Not for motor type: -	**Scaling:** -	**Expert list:** 1
Min	**Max**	**Factory setting**
-	-	-

Description: Display to diagnose the cyclic PROFINET connections.

Index:
[0] = Number of cyclic connections
[1] = Number of send subslots of all connections
[2] = Number of send net data (bytes) of all connections
[3] = Number of receive subslots of all connections
[4] = Number of receive net data (bytes) of all connections
[5] = Connection type (RT, IRT)

Dependency: Refer to: p8929

Note: Re index 5:
Bit 0 = 1: there is at least one RT connection.
Bit 1 = 1: there is an IRT connection.

r8939 PN DAP ID / PN DAP ID

CU_G130_PN, CU_G150_PN

Can be changed: -	**Calculated:** -	**Access level:** 3
Data type: Unsigned32	**Dynamic index:** -	**Func. diagram:** -
P-Group: -	**Units group:** -	**Unit selection:** -
Not for motor type: -	**Scaling:** -	**Expert list:** 1
Min	**Max**	**Factory setting**
-	-	-

Description: Displays the PROFINET Device Access Point ID (DAP ID) for the onboard PROFINET interface.
The combination of device ID (r8909) and DAP ID uniquely identifies a PROFINET access point.

Note: List of the SINAMICS DAP IDs:
20005 hex: CBE20 V4.3
20006 hex: CBE20 V4.4
20007 hex: CBE20 V4.5
20106 hex: CU310-2 PN V4.4
20107 hex: CU310-2 PN V4.5
20206 hex: CU305 PN V4.4
20306 hex: CU320-2 PN V4.4
20307 hex: CU320-2 PN V4.5
20407 hex: CU230-2 PN /CU240-2PN
20507 hex: CU250-2 PN

© Siemens AG 2012 All Rights Reserved

p8940[0...239] CBE20 Name of Station / CBE20 Name Stat

CU_G130_DP (PROFINET), CU_G130_PN (PROFINET), CU_G150_DP (PROFINET), CU_G150_PN (PROFINET)	**Can be changed:** U, T	**Calculated:** -	**Access level:** 3
	Data type: Unsigned8	**Dynamic index:** -	**Func. diagram:** -
	P-Group: -	**Units group:** -	**Unit selection:** -
	Not for motor type: -	**Scaling:** -	**Expert list:** 1

Min	Max	Factory setting
-	-	-

Description: Sets the station name for the Communication Board Ethernet 20 (CBE20).

Note: An ASCII table (excerpt) can be found, for example, in the appendix to the List Manual.

The parameter is only valid for firmware version "PROFINET Device" (p8835 = 1) or "Ethernet/IP" (p8835 = 4).

The interface configuration (p8940 and following) is activated with p8945 = 2 (becomes effective after the next POWER ON).

The parameter is not influenced by setting the factory setting.

p8941[0...3] CBE20 IP Address of Station / CBE20 IP of Stat

CU_G130_DP (PROFINET), CU_G130_PN (PROFINET), CU_G150_DP (PROFINET), CU_G150_PN (PROFINET)	**Can be changed:** U, T	**Calculated:** -	**Access level:** 3
	Data type: Unsigned8	**Dynamic index:** -	**Func. diagram:** -
	P-Group: -	**Units group:** -	**Unit selection:** -
	Not for motor type: -	**Scaling:** -	**Expert list:** 1

Min	Max	Factory setting
0	255	0

Description: Sets the IP address for the Communication Board Ethernet 20 (CBE20).

Note: The parameter is only valid for firmware version "PROFINET Device" (p8835 = 1) or "Ethernet/IP" (p8835 = 4).

The interface configuration (p8940 and following) is activated with p8945 = 2 (becomes effective after the next POWER ON).

The parameter is not influenced by setting the factory setting.

p8942[0...3] CBE20 Default Gateway of Station / CBE20 Def Gateway

CU_G130_DP (PROFINET), CU_G130_PN (PROFINET), CU_G150_DP (PROFINET), CU_G150_PN (PROFINET)	**Can be changed:** U, T	**Calculated:** -	**Access level:** 3
	Data type: Unsigned8	**Dynamic index:** -	**Func. diagram:** -
	P-Group: -	**Units group:** -	**Unit selection:** -
	Not for motor type: -	**Scaling:** -	**Expert list:** 1

Min	Max	Factory setting
0	255	0

Description: Sets the default gateway for the Communication Board Ethernet 20 (CBE20).

Note: The parameter is only valid for firmware version "PROFINET Device" (p8835 = 1) or "Ethernet/IP" (p8835 = 4).

The interface configuration (p8940 and following) is activated with p8945 = 2 (becomes effective after the next POWER ON).

The parameter is not influenced by setting the factory setting.

© Siemens AG 2012 All Rights Reserved

p8943[0...3] CBE20 Subnet Mask of Station / CBE20 Subnet Mask

CU_G130_DP (PROFINET), CU_G130_PN (PROFINET), CU_G150_DP (PROFINET), CU_G150_PN (PROFINET)

Can be changed: U, T	**Calculated:** -	**Access level:** 3
Data type: Unsigned8	**Dynamic index:** -	**Func. diagram:** -
P-Group: -	**Units group:** -	**Unit selection:** -
Not for motor type: -	**Scaling:** -	**Expert list:** 1

Min	Max	Factory setting
0	255	0

Description: Sets the subnet mask for the Communication Board Ethernet 20 (CBE20).

Note: The parameter is only valid for firmware version "PROFINET Device" (p8835 = 1) or "Ethernet/IP" (p8835 = 4).

The interface configuration (p8940 and following) is activated with p8945 = 2 (becomes effective after the next POWER ON).

The parameter is not influenced by setting the factory setting.

p8944 CBE20 DHCP Mode / CBE20 DHCP Mode

CU_G130_DP (PROFINET), CU_G130_PN (PROFINET), CU_G150_DP (PROFINET), CU_G150_PN (PROFINET)

Can be changed: U, T	**Calculated:** -	**Access level:** 3
Data type: Unsigned8	**Dynamic index:** -	**Func. diagram:** -
P-Group: -	**Units group:** -	**Unit selection:** -
Not for motor type: -	**Scaling:** -	**Expert list:** 1

Min	Max	Factory setting
0	255	0

Description: Sets the DHCP mode for the Communication Board Ethernet 20 (CBE20).

Note: The parameter is only valid for firmware version "PROFINET Device" (p8835 = 1) or "Ethernet/IP" (p8835 = 4).

The interface configuration (p8940 and following) is activated with p8945 = 2 (becomes effective after the next POWER ON).

The parameter is not influenced by setting the factory setting.

p8945 CBE20 interface configuration / CBE20 IF config

CU_G130_DP (PROFINET), CU_G130_PN (PROFINET), CU_G150_DP (PROFINET), CU_G150_PN (PROFINET)

Can be changed: U, T	**Calculated:** -	**Access level:** 3
Data type: Integer16	**Dynamic index:** -	**Func. diagram:** -
P-Group: -	**Units group:** -	**Unit selection:** -
Not for motor type: -	**Scaling:** -	**Expert list:** 1

Min	Max	Factory setting
0	3	0

Description: Sets the activation of the interface configuration for the Communication Board Ethernet 20 (CBE20).

p8945 is automatically set to 0 at the end of an operation.

Value:
0: No function
2: Save and activate configuration
3: Delete configuration

Note: The parameter is only valid for firmware version "PROFINET Device" (p8835 = 1) or "Ethernet/IP" (p8835 = 4). Otherwise, it is locked.

Re p8945 = 2:

The interface configuration (p8940 and following) is saved and activated after the next POWER ON.

Re p8945 = 3:

The factory setting of the interface configuration is loaded after the next POWER ON.

© Siemens AG 2012 All Rights Reserved

r8950[0...239] CBE20 Name of Station active / CBE20 name act

CU_G130_DP (PROFINET), CU_G130_PN (PROFINET), CU_G150_DP (PROFINET), CU_G150_PN (PROFINET)	**Can be changed:** -	**Calculated:** -	**Access level:** 3
	Data type: Unsigned8	**Dynamic index:** -	**Func. diagram:** -
	P-Group: -	**Units group:** -	**Unit selection:** -
	Not for motor type: -	**Scaling:** -	**Expert list:** 1

Min	Max	Factory setting
-	-	-

Description: Displays the active station name for the Communication Board Ethernet 20 (CBE20).

r8951[0...3] CBE20 IP Address of Station active / CBE20 IP act

CU_G130_DP (PROFINET), CU_G130_PN (PROFINET), CU_G150_DP (PROFINET), CU_G150_PN (PROFINET)	**Can be changed:** -	**Calculated:** -	**Access level:** 3
	Data type: Unsigned8	**Dynamic index:** -	**Func. diagram:** -
	P-Group: -	**Units group:** -	**Unit selection:** -
	Not for motor type: -	**Scaling:** -	**Expert list:** 1

Min	Max	Factory setting
-	-	-

Description: Displays the active IP address for the Communication Board Ethernet 20 (CBE20).

r8952[0...3] CBE20 Default Gateway of Station active / CBE20 def GW act

CU_G130_DP (PROFINET), CU_G130_PN (PROFINET), CU_G150_DP (PROFINET), CU_G150_PN (PROFINET)	**Can be changed:** -	**Calculated:** -	**Access level:** 3
	Data type: Unsigned8	**Dynamic index:** -	**Func. diagram:** -
	P-Group: -	**Units group:** -	**Unit selection:** -
	Not for motor type: -	**Scaling:** -	**Expert list:** 1

Min	Max	Factory setting
-	-	-

Description: Displays the active standard gateway for the Communication Board Ethernet 20 (CBE20).

r8953[0...3] CBE20 Subnet Mask of Station active / CBE20 sub mask act

CU_G130_DP (PROFINET), CU_G130_PN (PROFINET), CU_G150_DP (PROFINET), CU_G150_PN (PROFINET)	**Can be changed:** -	**Calculated:** -	**Access level:** 3
	Data type: Unsigned8	**Dynamic index:** -	**Func. diagram:** -
	P-Group: -	**Units group:** -	**Unit selection:** -
	Not for motor type: -	**Scaling:** -	**Expert list:** 1

Min	Max	Factory setting
-	-	-

Description: Displays the active subnet mask for the Communication Board Ethernet 20 (CBE20).

© Siemens AG 2012 All Rights Reserved

r8954 CBE20 DHCP Mode active / CBE20 DHCP act

CU_G130_DP (PROFINET), CU_G130_PN (PROFINET), CU_G150_DP (PROFINET), CU_G150_PN (PROFINET)	**Can be changed:** -	**Calculated:** -	**Access level:** 3
	Data type: Unsigned8	**Dynamic index:** -	**Func. diagram:** -
	P-Group: -	**Units group:** -	**Unit selection:** -
	Not for motor type: -	**Scaling:** -	**Expert list:** 1

Min	Max	Factory setting
-	-	-

Description: Displays the active DHCP mode for the Communication Board Ethernet 20 (CBE20).

r8955[0...5] CBE20 MAC Address of Station / CBE20 MAC addr

CU_G130_DP (PROFINET), CU_G130_PN (PROFINET), CU_G150_DP (PROFINET), CU_G150_PN (PROFINET)	**Can be changed:** -	**Calculated:** -	**Access level:** 3
	Data type: Unsigned8	**Dynamic index:** -	**Func. diagram:** -
	P-Group: -	**Units group:** -	**Unit selection:** -
	Not for motor type: -	**Scaling:** -	**Expert list:** 1

Min	Max	Factory setting
-	-	-

Description: Displays the MAC address for the Communication Board Ethernet 20 (CBE20).

r8959 CBE20 DAP ID / CBE20 DAP ID

CU_G130_DP (PROFINET), CU_G130_PN (PROFINET), CU_G150_DP (PROFINET), CU_G150_PN (PROFINET)	**Can be changed:** -	**Calculated:** -	**Access level:** 3
	Data type: Unsigned32	**Dynamic index:** -	**Func. diagram:** -
	P-Group: -	**Units group:** -	**Unit selection:** -
	Not for motor type: -	**Scaling:** -	**Expert list:** 1

Min	Max	Factory setting
-	-	-

Description: Displays the PROFINET Device Access Point ID (DAP ID) for PROFINET CBE20.
The combination of device ID (r8909) and DAP ID uniquely identifies a PROFINET access point.

Note: List of the SINAMICS DAP IDs:
20005 hex: CBE20 V4.3
20006 hex: CBE20 V4.4
20106 hex: CU310-2 PN V4.4
20206 hex: CU305 PN V4.4
20306 hex: CU320-2 PN V4.4

r8960[0...2] PN subslot controller assignment / PN subslot assign

B_INF, CU_G130_DP, CU_G130_PN, CU_G150_DP, CU_G150_PN, ENC, TB30, TM150, TM31, VECTOR_G	**Can be changed:** -	**Calculated:** -	**Access level:** 3
	Data type: Unsigned8	**Dynamic index:** -	**Func. diagram:** -
	P-Group: -	**Units group:** -	**Unit selection:** -
	Not for motor type: -	**Scaling:** -	**Expert list:** 1

Min	Max	Factory setting
0	8	-

Description: Displays the controller assignment of a PROFINET subslot on the actual drive object.

© Siemens AG 2012 All Rights Reserved

Index: [0] = Subslot 2 PROFIsafe
[1] = Subslot 3 PZD telegram
[2] = Subslot 4 PZD supplementary data

Dependency: Refer to: r8961, r8962

Note: Example:
If the parameter contains the value 2 in index [1], then this means that subslot 3 is assigned to controller 2.

r8961[0...3] PN IP Address Remote Controller 1 / IP Addr Rem Ctrl1

CU_G130_PN, CU_G150_PN

Can be changed: -	**Calculated:** -	**Access level:** 3
Data type: Unsigned8	**Dynamic index:** -	**Func. diagram:** -
P-Group: -	**Units group:** -	**Unit selection:** -
Not for motor type: -	**Scaling:** -	**Expert list:** 1
Min	**Max**	**Factory setting**
0	255	-

Description: Displays the IP address of the first PROFINET controller connected with the device via PN onboard.

r8962[0...3] PN IP Address Remote Controller 2 / IP Addr Rem Ctrl2

CU_G130_PN, CU_G150_PN

Can be changed: -	**Calculated:** -	**Access level:** 3
Data type: Unsigned8	**Dynamic index:** -	**Func. diagram:** -
P-Group: -	**Units group:** -	**Unit selection:** -
Not for motor type: -	**Scaling:** -	**Expert list:** 1
Min	**Max**	**Factory setting**
0	255	-

Description: Displays the IP address of the second PROFINET controller connected with the device via PN onboard.

p8969 PROFIsafe wait for clock synchronization / PS wait sync

CU_G130_DP, CU_G130_PN, CU_G150_DP, CU_G150_PN

Can be changed: U, T	**Calculated:** -	**Access level:** 3
Data type: Integer16	**Dynamic index:** -	**Func. diagram:** -
P-Group: -	**Units group:** -	**Unit selection:** -
Not for motor type: -	**Scaling:** -	**Expert list:** 1
Min	**Max**	**Factory setting**
0	1	0

Description: Setting for the behavior of a PROFIsafe communication connection depending on another isochronous communication connection.

Value:
0: No
1: Yes

Recommend.: A value of 1 is recommended, if problems are encountered with the PROFIsafe connection when synchronizing.

Note: If value = 1:
A PROFIsafe connection is only accepted if an isochronous connection exists.
Relevant, if PROFIsafe and isochronous operation are configured via various communication connections (e.g. PROFINET Shared Device).

© Siemens AG 2012 All Rights Reserved

r8970[0...2] CBE20 subslot controller assignment / CBE20 subslot

B_INF (PROFINET), CU_G130_DP (PROFINET), CU_G130_PN (PROFINET), CU_G150_DP (PROFINET), CU_G150_PN (PROFINET), ENC (PROFINET), TB30 (PROFINET), TM150 (PROFINET), TM31 (PROFINET), VECTOR_G (PROFINET)

Can be changed: -	**Calculated:** -	**Access level:** 3
Data type: Unsigned8	**Dynamic index:** -	**Func. diagram:** -
P-Group: -	**Units group:** -	**Unit selection:** -
Not for motor type: -	**Scaling:** -	**Expert list:** 1

Min	Max	Factory setting
0	8	-

Description: Displays the controller assignment of a PROFINET subslot on the actual drive object.

Index:
[0] = Subslot 2 PROFIsafe
[1] = Subslot 3 PZD telegram
[2] = Subslot 4 PZD supplementary data

Dependency: Refer to: r8971, r8972

Note: Example:
If the parameter contains the value 2 in index [1], then this means that subslot 3 is assigned to controller 2.

r8971[0...3] CBE20 IP Address Remote Controller 1 / CBE20 IP Rem Ctrl1

CU_G130_DP (PROFINET), CU_G130_PN (PROFINET), CU_G150_DP (PROFINET), CU_G150_PN (PROFINET)

Can be changed: -	**Calculated:** -	**Access level:** 3
Data type: Unsigned8	**Dynamic index:** -	**Func. diagram:** -
P-Group: -	**Units group:** -	**Unit selection:** -
Not for motor type: -	**Scaling:** -	**Expert list:** 1

Min	Max	Factory setting
0	255	-

Description: Displays the IP address of the first PROFINET controller connected with the device via CBE20.

r8972[0...3] CBE20 IP Address Remote Controller 2 / CBE20 IP Rem Ctrl2

CU_G130_DP (PROFINET), CU_G130_PN (PROFINET), CU_G150_DP (PROFINET), CU_G150_PN (PROFINET)

Can be changed: -	**Calculated:** -	**Access level:** 3
Data type: Unsigned8	**Dynamic index:** -	**Func. diagram:** -
P-Group: -	**Units group:** -	**Unit selection:** -
Not for motor type: -	**Scaling:** -	**Expert list:** 1

Min	Max	Factory setting
0	255	-

Description: Displays the IP address of the second PROFINET controller connected with the device via CBE20.

© Siemens AG 2012 All Rights Reserved

p9206[0...2] Topology direct access / Topo access

CU_G130_DP, CU_G130_PN, CU_G150_DP, CU_G150_PN

Can be changed: T	**Calculated:** -	**Access level:** 3
Data type: Unsigned32	**Dynamic index:** -	**Func. diagram:** -
P-Group: Topology	**Units group:** -	**Unit selection:** -
Not for motor type: -	**Scaling:** -	**Expert list:** 1
Min	**Max**	**Factory setting**
0	4294967295	0

Description:
Data setting to read topology properties.
The result is displayed depending on the property in r9207 or r9208.
Re index 0:
0: actual topology, 1: target topology
Re index 1:
Sets the component number of the component involved.
Re index 2:
7: Name (r9208)
8: Component type (r9207)
9: Number of DRIVE-CLiQ connections (r9207)
11: Manufacturer (upper byte) and version (lower byte) (r9207)
12: Serial number (r9208)
13: Index (r9207)
15: Comparison level (r9207)
23: Order number (r9207)
24: Hardware serial number (r9208)
25: Collective order number (r9207)
28: Firmware version (r9207)
29: EPROM version (r9207)
30: Hardware version (r9207)

Index:
[0] = Actual topology/target topology
[1] = Component number
[2] = Identifier/property

Dependency:
Refer to: r9207, r9208

r9207 Topology direct access integer value / Topo access int

CU_G130_DP, CU_G130_PN, CU_G150_DP, CU_G150_PN

Can be changed: -	**Calculated:** -	**Access level:** 3
Data type: Unsigned32	**Dynamic index:** -	**Func. diagram:** -
P-Group: Topology	**Units group:** -	**Unit selection:** -
Not for motor type: -	**Scaling:** -	**Expert list:** 1
Min	**Max**	**Factory setting**
-	-	-

Description:
Displays the value for the property set in p9206.
A value is only displayed for integer type properties.

Dependency:
Refer to: p9206, r9208

r9208[0...50] Topology direct access string / Topo access string

CU_G130_DP, CU_G130_PN, CU_G150_DP, CU_G150_PN

Can be changed: -	**Calculated:** -	**Access level:** 3
Data type: Unsigned8	**Dynamic index:** -	**Func. diagram:** -
P-Group: Topology	**Units group:** -	**Unit selection:** -
Not for motor type: -	**Scaling:** -	**Expert list:** 1
Min	**Max**	**Factory setting**
-	-	-

Description:
Displays the value for the property set in p9206.
A value is only displayed for string type properties.

© Siemens AG 2012 All Rights Reserved

Dependency: Refer to: p9206, r9207
Note: An ASCII table (excerpt) can be found, for example, in the appendix to the List Manual.

p9210 Flashing component number / Flash comp_no.

CU_G130_DP, CU_G130_PN, CU_G150_DP, CU_G150_PN

Can be changed: U, T	**Calculated:** -	**Access level:** 3
Data type: Unsigned16	**Dynamic index:** -	**Func. diagram:** -
P-Group: Topology	**Units group:** -	**Unit selection:** -
Not for motor type: -	**Scaling:** -	**Expert list:** 1
Min	**Max**	**Factory setting**
0	499	0

Description: Sets the component number for a component to get its status LED to flash.
Dependency: Refer to: p9211

p9211 Flash function / Flash fct.

CU_G130_DP, CU_G130_PN, CU_G150_DP, CU_G150_PN

Can be changed: U, T	**Calculated:** -	**Access level:** 3
Data type: Integer16	**Dynamic index:** -	**Func. diagram:** -
P-Group: Topology	**Units group:** -	**Unit selection:** -
Not for motor type: -	**Scaling:** -	**Expert list:** 1
Min	**Max**	**Factory setting**
-1	1	-1

Description: Sets the function for the component selected in p9210.
After initiating a function, the parameter is automatically reset again.
Example:
- Set the component number (p9210).
- Select the "flashing on" function (set p9211 = 1).

Value:
-1: Select function
0: Flashing off
1: Flashing on

Dependency: Refer to: p9210
Notice: If a task cannot be executed (e.g. the component number in p9210 does not exist), the following applies:
- There is no negative feedback signal.
- The value is reset anyway.

p9300 SI Motion monitoring clock cycle (Motor Module) / SI Mtn clock MM

VECTOR_G

Can be changed: C2(95)	**Calculated:** -	**Access level:** 3
Data type: FloatingPoint32	**Dynamic index:** -	**Func. diagram:** -
P-Group: Safety Integrated	**Units group:** -	**Unit selection:** -
Not for motor type: -	**Scaling:** -	**Expert list:** 1
Min	**Max**	**Factory setting**
500.00 [µs]	25000.00 [µs]	12000.00 [µs]

Description: Sets the monitoring clock cycle for safe motion monitoring.
Dependency: Refer to: p9500, p9511
Refer to: F01652
Notice: This parameter is overwritten by the copy function of the safety functions integrated in the drive.
Note: The monitoring clock cycle must be a multiple of the actual value sensing clock cycle in p9311 or of the DP clock cycle.
A change only becomes effective after a POWER ON.

© Siemens AG 2012 All Rights Reserved

p9301 SI Motion enable safety functions (Motor Module) / SI Mtn enable MM

VECTOR_G

Can be changed: C2(95)	**Calculated:** -	**Access level:** 3
Data type: Unsigned32	**Dynamic index:** -	**Func. diagram:** -
P-Group: Safety Integrated	**Units group:** -	**Unit selection:** -
Not for motor type: -	**Scaling:** -	**Expert list:** 1
Min	**Max**	**Factory setting**
-	-	0000 0000 0000 0000 0000 0000 0000 0000 bin

Description: Sets the enable signals for the safe motion monitoring.

Bit field:

Bit	Signal name	1 signal	0 signal	FP
00	Enable SOS/SLS	Enable	Inhibit	-
01	Enable SLP	Enable	Inhibit	-
02	Enable absolute position	Enable	Inhibit	-
03	Enable actual value synchronization	Enable	Inhibit	-
16	Enable SSM hysteresis and filtering	Enable	Inhibit	2860
17	Enable SDI	Enable	Inhibit	2861
24	Enable transfer SLS limit value via PROFIsafe	Enable	Inhibit	-
25	Enable transfer safe position via PROFIsafe	Enable	Inhibit	-

Dependency: Refer to: p9501
Refer to: F01682, F01683

Notice: This parameter is overwritten by the copy function of the safety functions integrated in the drive.

Note: A change only becomes effective after a POWER ON.
SDI: Safe Direction (safe motion direction)
SLP: Safely-Limited Position
SLS: Safely-Limited Speed
SOS: Safe Operating Stop
SP: Safe Position
SSM: Safe Speed Monitor (safety-relevant feedback signal from the velocity monitoring)

p9302 SI Motion axis type (Motor Module) / SI Mtn AxisType MM

VECTOR_G

Can be changed: C2(95)	**Calculated:** -	**Access level:** 3
Data type: Integer16	**Dynamic index:** -	**Func. diagram:** -
P-Group: Safety Integrated	**Units group:** -	**Unit selection:** -
Not for motor type: -	**Scaling:** -	**Expert list:** 1
Min	**Max**	**Factory setting**
0	1	0

Description: Sets the axis type (linear axis or rotary axis/spindle).

Value:
0: Linear axis
1: Rot axis/spindle

Dependency: Refer to: p9502

Notice: This parameter is overwritten by the copy function of the safety functions integrated in the drive.

Note: For the commissioning software, after changing over the axis type, the units dependent on the axis type are only updated after a project upload.
A change only becomes effective after a POWER ON.

© Siemens AG 2012 All Rights Reserved

p9305 SI Motion SP modulo value (Motor Module) / SI mtn SP mod MM

VECTOR_G

Can be changed: C2(95)	**Calculated:** -	**Access level:** 3
Data type: FloatingPoint32	**Dynamic index:** -	**Func. diagram:** -
P-Group: Safety Integrated	**Units group:** -	**Unit selection:** -
Not for motor type: -	**Scaling:** -	**Expert list:** 1
Min	**Max**	**Factory setting**
0 [°]	737280 [°]	0 [°]

Description: Sets the modulo value in degrees for rotary axes of the "Safe position" function.

This modulo value is taken into account when safely referencing as well as when transferring the safe position via PROFIsafe when the absolute position is enabled.

The modulo function is deactivated for a value = 0.

Dependency: Refer to: F01681

Notice: When the "SLP" function is activated, the modulo function must be deactivated as otherwise fault F30681 will be output.

If the absolute position is not enabled, then the parameterized modulo value is not taken into account.

This parameter is overwritten by the copy function of the safety functions integrated in the drive.

Note: SLP: Safely-Limited Position

SP: Safe Position

p9306 SI Motion function specification (Motor Module) / SI Mtn fct_spc MM

VECTOR_G

Can be changed: C2(95)	**Calculated:** -	**Access level:** 3
Data type: Integer16	**Dynamic index:** -	**Func. diagram:** -
P-Group: Safety Integrated	**Units group:** -	**Unit selection:** -
Not for motor type: -	**Scaling:** -	**Expert list:** 1
Min	**Max**	**Factory setting**
0	3	0

Description: Sets the function specification for the safe motion monitoring.

Value:
0: Safety with encoder and accel_monitoring(SAM) / delay time
1: Safety without encoder and braking ramp(SBR)
3: Safety without encoder with accel_monitoring(SAM) / delay time

Dependency: Refer to: C30711

Notice: This parameter is overwritten by the copy function of the safety functions integrated in the drive.

p9307 SI Motion function configuration MM / SI mtn config MM

VECTOR_G

Can be changed: C2(95)	**Calculated:** -	**Access level:** 3
Data type: Unsigned32	**Dynamic index:** -	**Func. diagram:** -
P-Group: Safety Integrated	**Units group:** -	**Unit selection:** -
Not for motor type: -	**Scaling:** -	**Expert list:** 1
Min	**Max**	**Factory setting**
-	-	0000 bin

Description: Sets the function configuration for the safe motion monitoring functions.

Bit field:

Bit	Signal name	1 signal	0 signal	FP
00	Extended message acknowledgement	Yes	No	-
01	Setpoint velocity limit for STOP F	No	Yes	-
02	Motor type sensorless actual value sensing	Synchronous motor	Induction motor	-
03	SS1 drive-based braking response	without OFF3	with OFF3	-

Dependency: Refer to: C01711

Notice: This parameter is overwritten by the copy function of the safety functions integrated in the drive.

Note: Re bit 00:

When the function is activated, a safety-relevant acknowledgement (internal event acknowledge) can be performed by selecting/deselecting STO.

Re bit 01:

When the function is activated, the active setpoint velocity limit (CO: r9733) is set to zero when STOP F is active.

© Siemens AG 2012 All Rights Reserved

Re bit 02:
This bit defines the type of motor, which the sensorless safety technology evaluates.
For bit = 0, the sensorless motion monitoring function calculates the actual velocity for an induction motor.
For bit = 1, an actual velocity is calculated for a synchronous motor. This value depends on the setting in p0300.
Bit = 0 should be set if no motor is defined (p0300 = 0).
Re bit 03:
When the function is activated, the drive-based braking response (OFF3 ramp) after SS1/internal STOP B is deactivated. Braking monitoring (SBR, SAM) is also deactivated.

p9309 SI Motion behavior during pulse suppression (Motor Module) / SI Mtn behav IL MM

VECTOR_G

Can be changed: C2(95)	**Calculated:** -	**Access level:** 3
Data type: Unsigned32	**Dynamic index:** -	**Func. diagram:** -
P-Group: Safety Integrated	**Units group:** -	**Unit selection:** -
Not for motor type: -	**Scaling:** -	**Expert list:** 1
Min	**Max**	**Factory setting**
-	-	0000 0000 1111 1111 bin

Description: Sets the behavior of safety functions and their feedback during pulse suppression in encoderless operation.

Bit field:

Bit	Signal name	1 signal	0 signal	FP
00	SSM during pulse suppression and sensorless	Becomes inactive	Remains active	-
08	SDI during pulse suppression and sensorless	Becomes inactive	Remains active	-

Dependency: Refer to: C01711

Notice: This parameter is overwritten by the copy function of the safety functions integrated in the drive.
Re bit 00:
If the OFF1 or the OFF3 ramp-down time is too low, or there is an insufficient clearance between the SSM limit speed, and the shutdown speed, then it is possible that the "speed under limit value" signal does not change to 1, because no speed actual value below the SSM limit was able to be identified before pulse cancellation. In this case, the OFF1 or the OFF3 ramp-down time or the clearance between the SSM limit speed and shutdown speed must be increased.

Note: SDI: Safe Direction (safe motion direction)
SSM: Safe Speed Monitor (safety-relevant feedback signal from the velocity monitoring)
Re bit 00:
For bit = 1 and with the SSM safety function activated, the following applies:
- During pulse suppression, monitoring is switched off and the feedback signal has a 0 signal level.
For bit = 0 and with the SSM safety function activated, the following applies:
- Monitoring continues during pulse suppression. The feedback signal last displayed before pulse suppression is kept and the system goes into the STO state.
Re bit 08:
For bit = 1 and with the SDI safety function activated, the following applies:
- During pulse suppression, monitoring is switched off and the status signal indicates inactive.
For bit = 0 and with the SDI safety function activated, the following applies:
- Monitoring continues during pulse suppression. The status signal indicates active and the system goes into the STO state.

p9311 SI Motion actual value sensing clock cycle (Motor Module) / SI Mtn act clk MM

VECTOR_G

Can be changed: C2(95)	**Calculated:** -	**Access level:** 3
Data type: FloatingPoint32	**Dynamic index:** -	**Func. diagram:** -
P-Group: Safety Integrated	**Units group:** -	**Unit selection:** -
Not for motor type: -	**Scaling:** -	**Expert list:** 1
Min	**Max**	**Factory setting**
0.0000 [µs]	25000.0000 [µs]	0.0000 [µs]

Description: Sets the clock cycle time of the actual value sensing for safe motion monitoring.

© Siemens AG 2012 All Rights Reserved

Setting criteria if the motion monitoring functions are executed with an encoder.

- A slower clock cycle time reduces the maximum permissible velocity - however, it ensures a lower load of the Control Unit for safe actual value sensing.

- The maximum permissible velocity which, when exceeded, can mean that errors occur during safe actual value sensing, is displayed in r9730.

- The isochronous PROFIBUS clock cycle is used as a clock cycle time for actual value sensing with a setting of 0 ms; the setting is 1 ms if isochronous operation is not being used.

Setting criteria if the motion monitoring functions are executed without an encoder:

- The actual value sensing clock cycle must be set to the same value as the current controller clock cycle (p0115).

Dependency: Refer to: p0115, p9300, p9511

Refer to: F01652

Notice: This parameter is overwritten by the copy function of the safety functions integrated in the drive.

Note: The parameter is only active for drive-based motion monitoring functions (p9801.2 = 1).

The monitoring clock cycle from p9300 must be an integer multiple of this parameter.

In the case of motion monitoring functions with encoder, the clock cycle time for actual value sensing must be an integer multiple of the current controller clock cycle and at least 4 times slower than the current controller clock cycle. A factor of at least 8 is recommended.

The clock cycle time of the actual value sensing should not be set to more than 8 ms.

A change only becomes effective after a POWER ON.

p9312 Select SI Motion safety functions without selection (MM) / SI Mtn w/o sel MM

VECTOR_G

Can be changed: C2(95)	**Calculated:** -	**Access level:** 3
Data type: Unsigned32	**Dynamic index:** -	**Func. diagram:** -
P-Group: Safety Integrated	**Units group:** -	**Unit selection:** -
Not for motor type: -	**Scaling:** -	**Expert list:** 1
Min	**Max**	**Factory setting**
-	-	0000 0000 0001 0000 bin

Description: Sets the safety functions without selection.

The safety functions without selection are enabled with p9601.5/p9801.5.

Using this parameter, the individual motion monitoring functions can then be selected (e.g. SLS, SDI positive, SDI negative), which should then be permanently selected.

Bit field:

Bit	Signal name	1 signal	0 signal	FP
04	SLS static (MM)	Statically active	Statically inact	-
12	SDI positive static (MM)	Statically active	Statically inact	-
13	SDI negative static (MM)	Statically active	Statically inact	-

Dependency: Refer to: p9601, p9801

Refer to: F01682, F30682

Notice: This parameter is overwritten by the copy function of the safety functions integrated in the drive.

Note: A change becomes immediately effective after exiting the safety commissioning mode.

SDI: Safe Direction (safe motion direction).

SLS: Safely-Limited Speed

p9313 SI Motion non safety-relevant measuring steps POS1 (MM) / nsrPOS1 MM

VECTOR_G

Can be changed: C2(95)	**Calculated:** -	**Access level:** 3
Data type: Unsigned32	**Dynamic index:** -	**Func. diagram:** -
P-Group: Safety Integrated	**Units group:** -	**Unit selection:** -
Not for motor type: -	**Scaling:** -	**Expert list:** 1
Min	**Max**	**Factory setting**
0	4294967295	22000

Description: Sets the non safety-relevant measuring steps of position value POS1.

The encoder that is used for the safe motion monitoring functions on the Motor Module must be parameterized in this parameter.

Dependency: Refer to: p9513

© Siemens AG 2012 All Rights Reserved

p9314 SI Motion absolute encoder linear measuring steps (MM) / EncLinMeasStep MM

VECTOR_G

Can be changed: C2(95)	**Calculated:** -	**Access level:** 3
Data type: Unsigned32	**Dynamic index:** -	**Func. diagram:** -
P-Group: Safety Integrated	**Units group:** -	**Unit selection:** -
Not for motor type: -	**Scaling:** -	**Expert list:** 1
Min	**Max**	**Factory setting**
0 [nm]	4294967295 [nm]	100 [nm]

Description: Sets the resolution of the absolute position for a linear absolute encoder.

The encoder that is used for the safe motion monitoring functions on the Motor Module must be parameterized in this parameter.

Dependency: Refer to: p9514

p9315 SI Motion coarse position value configuration (Motor Module) / SI Mtn s config MM

VECTOR_G

Can be changed: C2(95)	**Calculated:** -	**Access level:** 3
Data type: Unsigned32	**Dynamic index:** -	**Func. diagram:** -
P-Group: Safety Integrated	**Units group:** -	**Unit selection:** -
Not for motor type: -	**Scaling:** -	**Expert list:** 1
Min	**Max**	**Factory setting**
-	-	0000 0000 0000 0000 0000 0000 0000 0000 bin

Description: Sets the encoder configuration for the redundant coarse position value.

The encoder that is used for the safe motion monitoring functions on the Motor Module must be parameterized in this parameter.

Bit field:

Bit	Signal name	1 signal	0 signal	FP
00	Incrementer	Yes	No	-
01	Encoder CRC least significant byte first	Yes	No	-
02	Redundant coarse position val. most significant bit left-aligned	Yes	No	-
04	Binary comparison not possible	Yes	No	-
16	DRIVE-CLiQ encoder	Yes	No	-

Dependency: Refer to: r0474, p9515

p9316 SI Motion encoder configuration, safety functions (Motor Module) / SI Mtn enc_cfg MM

VECTOR_G

Can be changed: C2(95)	**Calculated:** -	**Access level:** 3
Data type: Unsigned16	**Dynamic index:** -	**Func. diagram:** -
P-Group: Safety Integrated	**Units group:** -	**Unit selection:** -
Not for motor type: -	**Scaling:** -	**Expert list:** 1
Min	**Max**	**Factory setting**
-	-	0000 bin

Description: Sets the configuration for the encoder and position actual value.

The encoder that is used for the safe motion monitoring functions on the Motor Module must be parameterized in this parameter.

Bit field:

Bit	Signal name	1 signal	0 signal	FP
00	Encoder rotating/linear	Linear	Rotating:	-
01	Position actual value, sign change	Yes	No	-

Dependency: Refer to: p0404, p0410, p9516

© Siemens AG 2012 All Rights Reserved

p9317 SI Motion linear scale grid division (Motor Module) / SI Mtn grid MM

VECTOR_G

Can be changed: C2(95)	**Calculated:** -	**Access level:** 3
Data type: FloatingPoint32	**Dynamic index:** -	**Func. diagram:** -
P-Group: Safety Integrated	**Units group:** -	**Unit selection:** -
Not for motor type: -	**Scaling:** -	**Expert list:** 1
Min	**Max**	**Factory setting**
0.00 [nm]	250000000.00 [nm]	10000.00 [nm]

Description: Sets the grid division for a linear encoder.

The encoder that is used for the safe motion monitoring functions on the Motor Module must be parameterized in this parameter.

Dependency: Refer to: p0407, p9316

p9318 SI Motion encoder pulses per revolution (Motor Module) / SI Mtn p/rev MM

VECTOR_G

Can be changed: C2(95)	**Calculated:** -	**Access level:** 3
Data type: Unsigned32	**Dynamic index:** -	**Func. diagram:** -
P-Group: Safety Integrated	**Units group:** -	**Unit selection:** -
Not for motor type: -	**Scaling:** -	**Expert list:** 1
Min	**Max**	**Factory setting**
0	16777215	2048

Description: Sets the number of encoder pulses per revolution for rotary encoders.

The encoder that is used for the safe motion monitoring functions on the Motor Module must be parameterized in this parameter.

Dependency: Refer to: p0408, p9316

p9319 SI Motion fine resolution G1_XIST1 (Motor Module) / SI Mtn G1_XIST1 MM

VECTOR_G

Can be changed: C2(95)	**Calculated:** -	**Access level:** 3
Data type: Unsigned32	**Dynamic index:** -	**Func. diagram:** -
P-Group: Safety Integrated	**Units group:** -	**Unit selection:** -
Not for motor type: -	**Scaling:** -	**Expert list:** 1
Min	**Max**	**Factory setting**
2	18	11

Description: Sets the fine resolution for G1_XIST1 in bits.

The encoder that is used for the safe motion monitoring functions on the Motor Module must be parameterized in this parameter.

Dependency: Refer to: p0418

Refer to: F01670, F01671

Note: For safety functions that have not been enabled (p9301 = 0), the following applies: When booting, p9319 is automatically set the same as p0418.

For safety functions that are enabled (p9301 > 0), the following applies: p9319 is checked for agreement with p0418.

G1_XIST1: Encoder 1 position actual value 1 (PROFIdrive)

p9320 SI Motion spindle pitch (Motor Module) / SI Mtn sp_pitch MM

VECTOR_G

Can be changed: C2(95)	**Calculated:** -	**Access level:** 3
Data type: FloatingPoint32	**Dynamic index:** -	**Func. diagram:** -
P-Group: Safety Integrated	**Units group:** -	**Unit selection:** -
Not for motor type: -	**Scaling:** -	**Expert list:** 1
Min	**Max**	**Factory setting**
0.1000 [mm]	8388.0000 [mm]	10.0000 [mm]

Description: Sets the gear ratio between the encoder and load in mm/revolution for a linear axis with rotary encoder.

The encoder that is used for the safe motion monitoring functions on the Motor Module must be parameterized in this parameter.

© Siemens AG 2012 All Rights Reserved

Dependency: Refer to: p9520

Notice: The fourth decimal point can be rounded-off depending on the size of the entered number (from 3 places before the decimal point).

p9321[0...7] SI Motion gearbox encoder (motor)/load denom (Motor Module) / SI Mtn gearDenomMM

VECTOR_G	**Can be changed:** C2(95)	**Calculated:** -	**Access level:** 3
	Data type: Unsigned32	**Dynamic index:** -	**Func. diagram:** -
	P-Group: Safety Integrated	**Units group:** -	**Unit selection:** -
	Not for motor type: -	**Scaling:** -	**Expert list:** 1
	Min	**Max**	**Factory setting**
	1	2147000000	1

Description: Sets the denominator for the gearbox between the encoder (or motor in the case of encoderless monitoring functions) and the load.

Index:
[0] = Gearbox 1
[1] = Gearbox 2
[2] = Gearbox 3
[3] = Gearbox 4
[4] = Gearbox 5
[5] = Gearbox 6
[6] = Gearbox 7
[7] = Gearbox 8

Dependency: Refer to: p9322

Notice: It is not possible to change over the gearbox stages. Gearbox 1 (index 0) is always active.

p9322[0...7] SI Motion gearbox encoder (motor)/load numerator (Motor Module) / SI Mtn gear num MM

VECTOR_G	**Can be changed:** C2(95)	**Calculated:** -	**Access level:** 3
	Data type: Unsigned32	**Dynamic index:** -	**Func. diagram:** -
	P-Group: Safety Integrated	**Units group:** -	**Unit selection:** -
	Not for motor type: -	**Scaling:** -	**Expert list:** 1
	Min	**Max**	**Factory setting**
	1	2147000000	1

Description: Sets the numerator for the gearbox between the encoder (or motor in the case of encoderless monitoring functions) and the load.

Index:
[0] = Gearbox 1
[1] = Gearbox 2
[2] = Gearbox 3
[3] = Gearbox 4
[4] = Gearbox 5
[5] = Gearbox 6
[6] = Gearbox 7
[7] = Gearbox 8

Dependency: Refer to: p9321

Notice: It is not possible to change over the gearbox stages. Gearbox 1 (index 0) is always active.

Note: In the case of encoderless monitoring functions, the pole pair number must be multiplied by the numerator of the gearbox ratio.

Example:

Gearbox ratio 1:4, pole pair number (r0313) = 2

--> p9321 = 1, p9322 = 8 (4 x 2)

© Siemens AG 2012 All Rights Reserved

p9323 SI Motion red. coarse position value valid bits (Motor Module) / Valid bits MM

VECTOR_G

Can be changed: C2(95)	**Calculated:** -	**Access level:** 3
Data type: Unsigned16	**Dynamic index:** -	**Func. diagram:** -
P-Group: Safety Integrated	**Units group:** -	**Unit selection:** -
Not for motor type: -	**Scaling:** -	**Expert list:** 1
Min	**Max**	**Factory setting**
0	16	9

Description: Sets the number of valid bits of the redundant coarse position value.

The encoder that is used for the safe motion monitoring functions on the Motor Module must be parameterized in this parameter.

Dependency: Refer to: r0470, p9523

p9324 SI Motion redundant coarse pos. value fine resolution bits (MM) / SI Mtn fine bit MM

VECTOR_G

Can be changed: C2(95)	**Calculated:** -	**Access level:** 3
Data type: Integer16	**Dynamic index:** -	**Func. diagram:** -
P-Group: Safety Integrated	**Units group:** -	**Unit selection:** -
Not for motor type: -	**Scaling:** -	**Expert list:** 1
Min	**Max**	**Factory setting**
-16	16	-2

Description: Sets the number of valid bits for the fine resolution of the redundant coarse position value.

The encoder that is used for the safe motion monitoring functions on the Motor Module must be parameterized in this parameter.

Dependency: Refer to: r0471, p9524

p9325 SI Motion redundant coarse pos. value relevant bits (MM) / Relevant bits MM

VECTOR_G

Can be changed: C2(95)	**Calculated:** -	**Access level:** 3
Data type: Unsigned16	**Dynamic index:** -	**Func. diagram:** -
P-Group: Safety Integrated	**Units group:** -	**Unit selection:** -
Not for motor type: -	**Scaling:** -	**Expert list:** 1
Min	**Max**	**Factory setting**
0	16	16

Description: Sets the number of relevant bits for the redundant coarse position value.

The encoder that is used for the safe motion monitoring functions on the Motor Module must be parameterized in this parameter.

Dependency: Refer to: p0414, r0472, p9525

p9326 SI Motion encoder assignment (Motor Module) / SI Mtn encoder MM

VECTOR_G

Can be changed: C2(95)	**Calculated:** -	**Access level:** 3
Data type: Unsigned32	**Dynamic index:** -	**Func. diagram:** -
P-Group: Safety Integrated	**Units group:** -	**Unit selection:** -
Not for motor type: -	**Scaling:** -	**Expert list:** 1
Min	**Max**	**Factory setting**
1	3	1

Description: Sets the number of the encoder, which is used on the Motor Module for safe motion monitoring functions.

Dependency: For the safe motion monitoring functions, the redundant safety position actual value sensing must be activated in the appropriate encoder data set (p0430.19 = 1).

Refer to: p0187, p0188, p0189, p0430, p9526

Notice: This parameter is overwritten by the copy function of the safety functions integrated in the drive.

Note: For p9326 = 1 the following applies: Motor Module uses an encoder for closed-loop speed control, it involves a 1-encoder system.

© Siemens AG 2012 All Rights Reserved

p9328[0...11] SI Motion Sensor Module Node Identifier (Motor Module) / SI Mtn SM Ident MM

VECTOR_G	**Can be changed:** C2(95)	**Calculated:** -	**Access level:** 3
	Data type: Unsigned8	**Dynamic index:** -	**Func. diagram:** -
	P-Group: Safety Integrated	**Units group:** -	**Unit selection:** -
	Not for motor type: -	**Scaling:** -	**Expert list:** 1
	Min	**Max**	**Factory setting**
	0000 hex	00FF hex	0000 hex

Description: Sets the node identifier of the Sensor Module that is used by the Motor Module for the motion monitoring functions.

Dependency: Refer to: r9881

Notice: This parameter is overwritten by the copy function of the safety functions integrated in the drive.

p9329 SI Motion Gx_XIST1 coarse pos safe most significant bit (MM) / Gx_XIST1 MSB MM

VECTOR_G	**Can be changed:** C2(95)	**Calculated:** -	**Access level:** 3
	Data type: Unsigned16	**Dynamic index:** -	**Func. diagram:** -
	P-Group: Safety Integrated	**Units group:** -	**Unit selection:** -
	Not for motor type: -	**Scaling:** -	**Expert list:** 1
	Min	**Max**	**Factory setting**
	0	31	14

Description: Sets the bit number for the safe most significant bit (MSB) of the Gx_XIST1 coarse position.
The encoder that is used for the safe motion monitoring functions on the Motor Module must be parameterized in this parameter.

Dependency: Refer to: p0415, r0475, p9529

Note: MSB: Most Significant Bit

p9330 SI Motion standstill tolerance (Motor Module) / SI Mtn SOS Tol MM

VECTOR_G	**Can be changed:** C2(95)	**Calculated:** -	**Access level:** 3
	Data type: FloatingPoint32	**Dynamic index:** -	**Func. diagram:** -
	P-Group: Safety Integrated	**Units group:** -	**Unit selection:** -
	Not for motor type: -	**Scaling:** -	**Expert list:** 1
	Min	**Max**	**Factory setting**
	0.000 [mm]	100.000 [mm]	1.000 [mm]

Description: Sets the tolerance for the function "Safe Operating Stop" (SOS).

Dependency: Refer to: p9530
Refer to: C01707

Notice: This parameter is overwritten by the copy function of the safety functions integrated in the drive.

Note: SOS: Safe Operating Stop

p9330 SI Motion standstill tolerance (Motor Module) / SI Mtn SOS Tol MM

VECTOR_G (Safety rot)	**Can be changed:** C2(95)	**Calculated:** -	**Access level:** 3
	Data type: FloatingPoint32	**Dynamic index:** -	**Func. diagram:** -
	P-Group: Safety Integrated	**Units group:** -	**Unit selection:** -
	Not for motor type: -	**Scaling:** -	**Expert list:** 1
	Min	**Max**	**Factory setting**
	0.000 [°]	100.000 [°]	1.000 [°]

Description: Sets the tolerance for the function "Safe Operating Stop" (SOS).

Dependency: Refer to: p9530
Refer to: C01707

Notice: This parameter is overwritten by the copy function of the safety functions integrated in the drive.

Note: SOS: Safe Operating Stop

© Siemens AG 2012 All Rights Reserved

p9331[0...3] SI Motion SLS limit values (Motor Module) / SI Mtn SLS lim MM

VECTOR_G	**Can be changed:** C2(95)	**Calculated:** -	**Access level:** 3
	Data type: FloatingPoint32	**Dynamic index:** -	**Func. diagram:** -
	P-Group: Safety Integrated	**Units group:** -	**Unit selection:** -
	Not for motor type: -	**Scaling:** -	**Expert list:** 1
	Min	**Max**	**Factory setting**
	0.00 [mm/min]	1000000.00 [mm/min]	2000.00 [mm/min]

Description: Sets the limit values for the function "Safely-Limited Speed" (SLS).

Index:
[0] = Limit value SLS1
[1] = Limit value SLS2
[2] = Limit value SLS3
[3] = Limit value SLP4

Dependency: Refer to: p9363, p9531
Refer to: C01714

Notice: This parameter is overwritten by the copy function of the safety functions integrated in the drive.

Note: SLS: Safely-Limited Speed

p9331[0...3] SI Motion SLS limit values (Motor Module) / SI Mtn SLS lim MM

VECTOR_G (Safety rot)	**Can be changed:** C2(95)	**Calculated:** -	**Access level:** 3
	Data type: FloatingPoint32	**Dynamic index:** -	**Func. diagram:** -
	P-Group: Safety Integrated	**Units group:** -	**Unit selection:** -
	Not for motor type: -	**Scaling:** -	**Expert list:** 1
	Min	**Max**	**Factory setting**
	0.00 [rpm]	1000000.00 [rpm]	2000.00 [rpm]

Description: Sets the limit values for the function "Safely-Limited Speed" (SLS).

Index:
[0] = Limit value SLS1
[1] = Limit value SLS2
[2] = Limit value SLS3
[3] = Limit value SLP4

Dependency: Refer to: p9363, p9531
Refer to: C01714

Notice: This parameter is overwritten by the copy function of the safety functions integrated in the drive.

Note: SLS: Safely-Limited Speed

p9334[0...1] SI Motion SLP upper limit values (Motor Module) / SI Mtn SLP uplimMM

VECTOR_G	**Can be changed:** C2(95)	**Calculated:** -	**Access level:** 3
	Data type: FloatingPoint32	**Dynamic index:** -	**Func. diagram:** 2822
	P-Group: Safety Integrated	**Units group:** -	**Unit selection:** -
	Not for motor type: -	**Scaling:** -	**Expert list:** 1
	Min	**Max**	**Factory setting**
	-2147000.000 [mm]	2147000.000 [mm]	100000.000 [mm]

Description: Sets the upper limit for the function "Safely-Limited Position" (SLP).

Index:
[0] = Limit value SLP1 (SE1)
[1] = Limit value SLP2 (SE2)

Dependency: Refer to: p9501, p9535, p9562
Refer to: C01715

Notice: This parameter is overwritten by the copy function of the safety functions integrated in the drive.

Note: For setting this limit value, the following applies: p9334[x] > p9335[x], x = 0, 1
A change only becomes effective after a POWER ON.
SLP: Safely-Limited Position / SE: Safe software limit switches

© Siemens AG 2012 All Rights Reserved

p9334[0...1] SI Motion SLP upper limit values (Motor Module) / SI Mtn SLP uplimMM

VECTOR_G (Safety rot)	**Can be changed:** C2(95)	**Calculated:** -	**Access level:** 3
	Data type: FloatingPoint32	**Dynamic index:** -	**Func. diagram:** 2822
	P-Group: Safety Integrated	**Units group:** -	**Unit selection:** -
	Not for motor type: -	**Scaling:** -	**Expert list:** 1
	Min -2147000.000 [°]	**Max** 2147000.000 [°]	**Factory setting** 100000.000 [°]

Description: Sets the upper limit for the function "Safely-Limited Position" (SLP).

Index: [0] = Limit value SLP1 (SE1)
[1] = Limit value SLP2 (SE2)

Dependency: Refer to: p9501, p9535, p9562
Refer to: C01715

Notice: This parameter is overwritten by the copy function of the safety functions integrated in the drive.

Note: For setting this limit value, the following applies: p9334[x] > p9335[x], x = 0, 1
A change only becomes effective after a POWER ON.
SLP: Safely-Limited Position / SE: Safe software limit switches

p9335[0...1] SI Motion SLP lower limit values (Motor Module) / SI Mtn SLPlowLimMM

VECTOR_G	**Can be changed:** C2(95)	**Calculated:** -	**Access level:** 3
	Data type: FloatingPoint32	**Dynamic index:** -	**Func. diagram:** 2822
	P-Group: Safety Integrated	**Units group:** -	**Unit selection:** -
	Not for motor type: -	**Scaling:** -	**Expert list:** 1
	Min -2147000.000 [mm]	**Max** 2147000.000 [mm]	**Factory setting** -100000.000 [mm]

Description: Sets the lower limit for the function "Safely-Limited Position" (SLP).

Index: [0] = Limit value SLP1 (SE1)
[1] = Limit value SLP2 (SE2)

Dependency: Refer to: p9501, p9534, p9562
Refer to: C01715

Notice: This parameter is overwritten by the copy function of the safety functions integrated in the drive.

Note: For setting this limit value, the following applies: p9334[x] > p9335[x], x = 0, 1
A change only becomes effective after a POWER ON.
SLP: Safely-Limited Position / SE: Safe software limit switches

p9335[0...1] SI Motion SLP lower limit values (Motor Module) / SI Mtn SLPlowLimMM

VECTOR_G (Safety rot)	**Can be changed:** C2(95)	**Calculated:** -	**Access level:** 3
	Data type: FloatingPoint32	**Dynamic index:** -	**Func. diagram:** 2822
	P-Group: Safety Integrated	**Units group:** -	**Unit selection:** -
	Not for motor type: -	**Scaling:** -	**Expert list:** 1
	Min -2147000.000 [°]	**Max** 2147000.000 [°]	**Factory setting** -100000.000 [°]

Description: Sets the lower limit for the function "Safely-Limited Position" (SLP).

Index: [0] = Limit value SLP1 (SE1)
[1] = Limit value SLP2 (SE2)

Dependency: Refer to: p9501, p9534, p9562
Refer to: C01715

Notice: This parameter is overwritten by the copy function of the safety functions integrated in the drive.

Note: For setting this limit value, the following applies: p9334[x] > p9335[x], x = 0, 1
A change only becomes effective after a POWER ON.
SLP: Safely-Limited Position / SE: Safe software limit switches

© Siemens AG 2012 All Rights Reserved

p9341 SI Motion encoder comparison algorithm (Motor Module) / Enc comp algo MM

VECTOR_G	**Can be changed:** C2(95)	**Calculated:** -	**Access level:** 3
	Data type: Integer16	**Dynamic index:** -	**Func. diagram:** -
	P-Group: Safety Integrated	**Units group:** -	**Unit selection:** -
	Not for motor type: -	**Scaling:** -	**Expert list:** 1
	Min	**Max**	**Factory setting**
	0	255	255

Description: Sets the the comparison algorithm for the encoder position monitoring functions.

The encoder that is used for the safe motion monitoring functions on the Motor Module must be parameterized in this parameter.

Value:
0: SMx20 safety algorithm
10: DQL binary safety algorithm
11: DQL linear non-binary safety algorithm
255: Safety algorithm unknown

Dependency: Refer to: p9541

p9342 SI Motion act val comparison tol (crosswise) (Motor Module) / SI Mtn actV tol MM

VECTOR_G	**Can be changed:** C2(95)	**Calculated:** -	**Access level:** 3
	Data type: FloatingPoint32	**Dynamic index:** -	**Func. diagram:** -
	P-Group: Safety Integrated	**Units group:** -	**Unit selection:** -
	Not for motor type: -	**Scaling:** -	**Expert list:** 1
	Min	**Max**	**Factory setting**
	0.0010 [mm]	360.0000 [mm]	0.1000 [mm]

Description: Sets the tolerance for the crosswise data comparison of the actual position between the two monitoring channels.

For encoderless motion monitoring functions, the tolerance must be set to a higher value (12 degrees rotary and 1 mm linear).

Dependency: Refer to: p9542

Refer to: C01711

Notice: This parameter is overwritten by the copy function of the safety functions integrated in the drive.

Note: For a linear axis, the tolerance is internally limited to 10 mm.

For a "linear axis with rotating motor" and standard setting of p9320, p9321 and p9322, the standard setting of p9342 corresponds to a position tolerance of 36 ° on the motor side.

p9342 SI Motion act val comparison tol (crosswise) (Motor Module) / SI Mtn actV tol MM

VECTOR_G (Safety rot)	**Can be changed:** C2(95)	**Calculated:** -	**Access level:** 3
	Data type: FloatingPoint32	**Dynamic index:** -	**Func. diagram:** -
	P-Group: Safety Integrated	**Units group:** -	**Unit selection:** -
	Not for motor type: -	**Scaling:** -	**Expert list:** 1
	Min	**Max**	**Factory setting**
	0.0010 [°]	360.0000 [°]	0.1000 [°]

Description: Sets the tolerance for the crosswise data comparison of the actual position between the two monitoring channels.

For encoderless motion monitoring functions, the tolerance must be set to a higher value (12 degrees rotary and 1 mm linear).

Dependency: Refer to: p9542

Refer to: C01711

Notice: This parameter is overwritten by the copy function of the safety functions integrated in the drive.

Note: For a linear axis, the tolerance is internally limited to 10 mm.

For a "linear axis with rotating motor" and standard setting of p9320, p9321 and p9322, the standard setting of p9342 corresponds to a position tolerance of 36 ° on the motor side.

© Siemens AG 2012 All Rights Reserved

p9344 SI Motion actual value comparison tolerance (referencing) (MM) / SI mtn ref tol MM

VECTOR_G

Can be changed: C2(95)	**Calculated:** -	**Access level:** 3
Data type: FloatingPoint32	**Dynamic index:** -	**Func. diagram:** -
P-Group: Safety Integrated	**Units group:** -	**Unit selection:** -
Not for motor type: -	**Scaling:** -	**Expert list:** 1
Min	**Max**	**Factory setting**
0.0000 [mm]	36.0000 [mm]	0.0100 [mm]

Description: Sets the tolerance to check the actual values after referencing (incremental encoder) or when powering up (absolute encoder).

Dependency: Refer to: C01711

Notice: This parameter is overwritten by the copy function of the safety functions integrated in the drive.

Note: A change only becomes effective after a POWER ON.
For linear axes, the maximum value is limited to 1mm.

p9344 SI Motion actual value comparison tolerance (referencing) (MM) / SI mtn ref tol MM

VECTOR_G (Safety rot)

Can be changed: C2(95)	**Calculated:** -	**Access level:** 3
Data type: FloatingPoint32	**Dynamic index:** -	**Func. diagram:** -
P-Group: Safety Integrated	**Units group:** -	**Unit selection:** -
Not for motor type: -	**Scaling:** -	**Expert list:** 1
Min	**Max**	**Factory setting**
0.0000 [°]	36.0000 [°]	0.0100 [°]

Description: Sets the tolerance to check the actual values after referencing (incremental encoder) or when powering up (absolute encoder).

Dependency: Refer to: C01711

Notice: This parameter is overwritten by the copy function of the safety functions integrated in the drive.

Note: A change only becomes effective after a POWER ON.
For linear axes, the maximum value is limited to 1mm.

p9345 SI Motion SSM filter time (Motor Module) / SI Mtn SSM filt MM

VECTOR_G

Can be changed: C2(95)	**Calculated:** -	**Access level:** 3
Data type: FloatingPoint32	**Dynamic index:** -	**Func. diagram:** 2860
P-Group: Safety Integrated	**Units group:** -	**Unit selection:** -
Not for motor type: -	**Scaling:** -	**Expert list:** 1
Min	**Max**	**Factory setting**
0.00 [µs]	100000.00 [µs]	0.00 [µs]

Description: Sets the filter time for the SSM feedback signal to detect standstill.

Notice: This parameter is overwritten by the copy function of the safety functions integrated in the drive.

Note: The filter time is effective only if the function is enabled (p9301.16 = p9501.16 = 1).
The parameter is included in the crosswise data comparison of the two monitoring channels.
SSM: Safe Speed Monitor (safety-relevant feedback signal from the velocity monitoring)

p9346 SI Motion SSM velocity limit (Motor Module) / SI Mtn SSM v_limMM

VECTOR_G

Can be changed: C2(95)	**Calculated:** -	**Access level:** 3
Data type: FloatingPoint32	**Dynamic index:** -	**Func. diagram:** 2860
P-Group: Safety Integrated	**Units group:** -	**Unit selection:** -
Not for motor type: -	**Scaling:** -	**Expert list:** 1
Min	**Max**	**Factory setting**
0.00 [mm/min]	1000000.00 [mm/min]	20.00 [mm/min]

Description: Sets the velocity limit for the SSM feedback signal to detect standstill (n < nx).
When this limit value is undershot, the signal "SSM feedback signal active" is set.
For p9368 = p9568 = 0 the value in p9346/p9546 is also applicable for the function "SAM".

Dependency: Refer to: p9546

© Siemens AG 2012 All Rights Reserved

Caution: The "SAM" function is switched out if the selected threshold value is undershot.

Notice: This parameter is overwritten by the copy function of the safety functions integrated in the drive.

Note: SAM: Safe Acceleration Monitor (safe acceleration monitoring)
SSM: Safe Speed Monitor (safety-relevant feedback signal from the velocity monitoring)

p9346 SI Motion SSM velocity limit (Motor Module) / SI Mtn SSM v_limMM

VECTOR_G (Safety rot)

Can be changed: C2(95)	**Calculated:** -	**Access level:** 3
Data type: FloatingPoint32	**Dynamic index:** -	**Func. diagram:** 2860
P-Group: Safety Integrated	**Units group:** -	**Unit selection:** -
Not for motor type: -	**Scaling:** -	**Expert list:** 1
Min	**Max**	**Factory setting**
0.00 [rpm]	1000000.00 [rpm]	20.00 [rpm]

Description: Sets the velocity limit for the SSM feedback signal to detect standstill (n < nx).
When this limit value is undershot, the signal "SSM feedback signal active" is set.
For p9368 = p9568 = 0 the value in p9346/p9546 is also applicable for the function "SAM".

Dependency: Refer to: p9546

Caution: The "SAM" function is switched out if the selected threshold value is undershot.

Notice: This parameter is overwritten by the copy function of the safety functions integrated in the drive.

Note: SAM: Safe Acceleration Monitor (safe acceleration monitoring)
SSM: Safe Speed Monitor (safety-relevant feedback signal from the velocity monitoring)

p9347 SI Motion SSM velocity hysteresis (Motor Module) / SI Mtn SSM Hyst MM

VECTOR_G

Can be changed: C2(95)	**Calculated:** -	**Access level:** 3
Data type: FloatingPoint32	**Dynamic index:** -	**Func. diagram:** 2860
P-Group: Safety Integrated	**Units group:** -	**Unit selection:** -
Not for motor type: -	**Scaling:** -	**Expert list:** 1
Min	**Max**	**Factory setting**
0.0010 [mm/min]	500.0000 [mm/min]	10.0000 [mm/min]

Description: Sets the velocity hysteresis for the SSM feedback signal to detect standstill (n < nx).

Dependency: Refer to: C01711

Notice: This parameter is overwritten by the copy function of the safety functions integrated in the drive.

Note: The velocity hysteresis is effective only if the function is enabled (p9301.16 = p9501.16 = 1).
The parameter is included in the crosswise data comparison of the two monitoring channels.
SSM: Safe Speed Monitor (safety-relevant feedback signal from the velocity monitoring)

p9347 SI Motion SSM velocity hysteresis (Motor Module) / SI Mtn SSM Hyst MM

VECTOR_G (Safety rot)

Can be changed: C2(95)	**Calculated:** -	**Access level:** 3
Data type: FloatingPoint32	**Dynamic index:** -	**Func. diagram:** 2860
P-Group: Safety Integrated	**Units group:** -	**Unit selection:** -
Not for motor type: -	**Scaling:** -	**Expert list:** 1
Min	**Max**	**Factory setting**
0.0010 [rpm]	500.0000 [rpm]	10.0000 [rpm]

Description: Sets the velocity hysteresis for the SSM feedback signal to detect standstill (n < nx).

Dependency: Refer to: C01711

Notice: This parameter is overwritten by the copy function of the safety functions integrated in the drive.

Note: The velocity hysteresis is effective only if the function is enabled (p9301.16 = p9501.16 = 1).
The parameter is included in the crosswise data comparison of the two monitoring channels.
SSM: Safe Speed Monitor (safety-relevant feedback signal from the velocity monitoring)

© Siemens AG 2012 All Rights Reserved

p9348 SI Motion SAM actual velocity tolerance (Motor Module) / SI Mtn SAM tol MM

VECTOR_G

Can be changed: C2(95)	**Calculated:** -	**Access level:** 3
Data type: FloatingPoint32	**Dynamic index:** -	**Func. diagram:** -
P-Group: Safety Integrated	**Units group:** -	**Unit selection:** -
Not for motor type: -	**Scaling:** -	**Expert list:** 1
Min	**Max**	**Factory setting**
0.00 [mm/min]	120000.00 [mm/min]	300.00 [mm/min]

Description: Sets the velocity tolerance for the "SAM" function.

Dependency: Refer to: p9548
Refer to: C01706

Notice: This parameter is overwritten by the copy function of the safety functions integrated in the drive.

Note: SAM: Safe Acceleration Monitor (safe acceleration monitoring)

p9348 SI Motion SAM actual velocity tolerance (Motor Module) / SI Mtn SAM tol MM

VECTOR_G (Safety rot)

Can be changed: C2(95)	**Calculated:** -	**Access level:** 3
Data type: FloatingPoint32	**Dynamic index:** -	**Func. diagram:** -
P-Group: Safety Integrated	**Units group:** -	**Unit selection:** -
Not for motor type: -	**Scaling:** -	**Expert list:** 1
Min	**Max**	**Factory setting**
0.00 [rpm]	120000.00 [rpm]	300.00 [rpm]

Description: Sets the velocity tolerance for the "SAM" function.

Dependency: Refer to: p9548
Refer to: C01706

Notice: This parameter is overwritten by the copy function of the safety functions integrated in the drive.

Note: SAM: Safe Acceleration Monitor (safe acceleration monitoring)

p9349 SI Motion slip velocity tolerance (Motor Module) / SI Mtn slip MM

VECTOR_G

Can be changed: C2(95)	**Calculated:** -	**Access level:** 3
Data type: FloatingPoint32	**Dynamic index:** -	**Func. diagram:** -
P-Group: Safety Integrated	**Units group:** -	**Unit selection:** -
Not for motor type: -	**Scaling:** -	**Expert list:** 1
Min	**Max**	**Factory setting**
0.00 [mm/min]	6000.00 [mm/min]	6.00 [mm/min]

Description: Sets the velocity tolerance that is used for a 2-encoder system in crosswise comparison between the two monitoring channels.

Dependency: Refer to: p9301, p9342, p9549

Notice: This parameter is overwritten by the copy function of the safety functions integrated in the drive.

Note: If the "actual value synchronization" is not enabled (p9301.3 = 0), then the value parameterized in p9342 is used as tolerance in the crosswise data comparison.

p9349 SI Motion slip velocity tolerance (Motor Module) / SI Mtn slip MM

VECTOR_G (Safety rot)

Can be changed: C2(95)	**Calculated:** -	**Access level:** 3
Data type: FloatingPoint32	**Dynamic index:** -	**Func. diagram:** -
P-Group: Safety Integrated	**Units group:** -	**Unit selection:** -
Not for motor type: -	**Scaling:** -	**Expert list:** 1
Min	**Max**	**Factory setting**
0.00 [rpm]	6000.00 [rpm]	6.00 [rpm]

Description: Sets the velocity tolerance that is used for a 2-encoder system in crosswise comparison between the two monitoring channels.

Dependency: Refer to: p9301, p9342, p9549

Notice: This parameter is overwritten by the copy function of the safety functions integrated in the drive.

© Siemens AG 2012 All Rights Reserved

Note: If the "actual value synchronization" is not enabled (p9301.3 = 0), then the value parameterized in p9342 is used as tolerance in the crosswise data comparison.

p9351 SI Motion SLS changeover delay time (Motor Module) / SI Mtn SLS t MM

VECTOR_G

Can be changed: C2(95)	**Calculated:** -	**Access level:** 3
Data type: FloatingPoint32	**Dynamic index:** -	**Func. diagram:** 2825
P-Group: Safety Integrated	**Units group:** -	**Unit selection:** -
Not for motor type: -	**Scaling:** -	**Expert list:** 1
Min	**Max**	**Factory setting**
0.00 [µs]	600000000.00 [µs]	100000.00 [µs]

Description: Sets the delay time for the SLS changeover or for the changeover from SLS to SOS for the function "Safely-Limited Speed" (SLS).

When transitioning from a higher to a lower safely-limited velocity/speed stage or to the safe operating stop (SOS), within this delay time, the "old" velocity stage remains active.

Even if SLS or SOS is activated from non safety-related operation, then this delay is still applied.

Dependency: Refer to: p9551

Notice: This parameter is overwritten by the copy function of the safety functions integrated in the drive.

Note: SLS: Safely-Limited Speed

SOS: Safe Operating Stop

p9352 SI Motion transition time STOP C to SOS (Motor Module) / SI Mtn t C->SOS MM

VECTOR_G

Can be changed: C2(95)	**Calculated:** -	**Access level:** 3
Data type: FloatingPoint32	**Dynamic index:** -	**Func. diagram:** 2825
P-Group: Safety Integrated	**Units group:** -	**Unit selection:** -
Not for motor type: -	**Scaling:** -	**Expert list:** 1
Min	**Max**	**Factory setting**
0.00 [µs]	600000000.00 [µs]	100000.00 [µs]

Description: Sets the transition time from STOP C to "Safe Operating Stop" (SOS).

Dependency: Refer to: p9552

Notice: This parameter is overwritten by the copy function of the safety functions integrated in the drive.

Note: SOS: Safe Operating Stop

p9353 SI Motion transition time STOP D to SOS (Motor Module) / SI Mtn t D->SOS MM

VECTOR_G

Can be changed: C2(95)	**Calculated:** -	**Access level:** 3
Data type: FloatingPoint32	**Dynamic index:** -	**Func. diagram:** 2825
P-Group: Safety Integrated	**Units group:** -	**Unit selection:** -
Not for motor type: -	**Scaling:** -	**Expert list:** 1
Min	**Max**	**Factory setting**
0.00 [µs]	600000000.00 [µs]	100000.00 [µs]

Description: Sets the transition time from STOP D to "Safe Operating Stop" (SOS).

Dependency: Refer to: p9553

Notice: This parameter is overwritten by the copy function of the safety functions integrated in the drive.

Note: SOS: Safe Operating Stop

p9354 SI Motion transition time STOP E to SOS (Motor Module) / SI Mtn t E->SOS MM

VECTOR_G

Can be changed: C2(95)	**Calculated:** -	**Access level:** 3
Data type: FloatingPoint32	**Dynamic index:** -	**Func. diagram:** 2825
P-Group: Safety Integrated	**Units group:** -	**Unit selection:** -
Not for motor type: -	**Scaling:** -	**Expert list:** 1
Min	**Max**	**Factory setting**
0.00 [µs]	600000000.00 [µs]	100000.00 [µs]

Description: Sets the transition time from STOP E to "Safe Operating Stop" (SOS).

Dependency: Refer to: p9554

© Siemens AG 2012 All Rights Reserved

Notice: This parameter is overwritten by the copy function of the safety functions integrated in the drive.
Note: SOS: Safe Operating Stop

p9355 SI Motion transition time STOP F to STOP B (Motor Module) / SI Mtn t F->B MM

VECTOR_G

Can be changed: C2(95)	**Calculated:** -	**Access level:** 3
Data type: FloatingPoint32	**Dynamic index:** -	**Func. diagram:** 2825
P-Group: Safety Integrated	**Units group:** -	**Unit selection:** -
Not for motor type: -	**Scaling:** -	**Expert list:** 1
Min	**Max**	**Factory setting**
0.00 [µs]	600000000.00 [µs]	0.00 [µs]

Description: Sets the transition time from STOP F to STOP B.
Dependency: Refer to: C01711
Notice: This parameter is overwritten by the copy function of the safety functions integrated in the drive.

p9356 SI Motion pulse suppression delay time (Motor Module) / SI Mtn IL t_del MM

VECTOR_G

Can be changed: C2(95)	**Calculated:** -	**Access level:** 3
Data type: FloatingPoint32	**Dynamic index:** -	**Func. diagram:** 2825
P-Group: Safety Integrated	**Units group:** -	**Unit selection:** -
Not for motor type: -	**Scaling:** -	**Expert list:** 1
Min	**Max**	**Factory setting**
0.00 [µs]	3600000000.00 [µs]	100000.00 [µs]

Description: Sets the delay time for the safe pulse suppression after STOP B / SS1.
In the case of encoderless motion monitoring functions with safe brake ramp monitoring (p9306 = 1) and the OFF3 ramp enabled at the same time (p9507.3 = 0), the parameter has no effect.
Dependency: Refer to: p9360, p9556
Refer to: C01701
Notice: This parameter is overwritten by the copy function of the safety functions integrated in the drive.
Note: SS1: Safe Stop 1

p9357 SI Motion pulse suppression test time (Motor Module) / SI Mtn IL t MM

VECTOR_G

Can be changed: C2(95)	**Calculated:** -	**Access level:** 3
Data type: FloatingPoint32	**Dynamic index:** -	**Func. diagram:** -
P-Group: Safety Integrated	**Units group:** -	**Unit selection:** -
Not for motor type: -	**Scaling:** -	**Expert list:** 1
Min	**Max**	**Factory setting**
0.00 [µs]	10000000.00 [µs]	100000.00 [µs]

Description: Sets the time after which the pulses must have been suppressed when initiating the test stop.
Dependency: Refer to: p9557
Refer to: C01798
Notice: This parameter is overwritten by the copy function of the safety functions integrated in the drive.

p9358 SI Motion acceptance test mode time limit (Motor Module) / SI Mtn acc t MM

VECTOR_G

Can be changed: C2(95)	**Calculated:** -	**Access level:** 3
Data type: FloatingPoint32	**Dynamic index:** -	**Func. diagram:** -
P-Group: Safety Integrated	**Units group:** -	**Unit selection:** -
Not for motor type: -	**Scaling:** -	**Expert list:** 1
Min	**Max**	**Factory setting**
5000000.00 [µs]	100000000.00 [µs]	40000000.00 [µs]

Description: Sets the maximum time for the acceptance test mode.
If the acceptance test mode takes longer than the selected time limit, then the mode is automatically terminated.
Dependency: Refer to: p9558
Refer to: C01799
Notice: This parameter is overwritten by the copy function of the safety functions integrated in the drive.

© Siemens AG 2012 All Rights Reserved

p9360 SI Motion pulse suppression shutdown velocity (Motor Module) / SI Mtn IL v_sh MM

VECTOR_G

Can be changed: C2(95)	**Calculated:** -	**Access level:** 3
Data type: FloatingPoint32	**Dynamic index:** -	**Func. diagram:** -
P-Group: Safety Integrated	**Units group:** -	**Unit selection:** -
Not for motor type: -	**Scaling:** -	**Expert list:** 1
Min	**Max**	**Factory setting**
0.00 [mm/min]	6000.00 [mm/min]	0.00 [mm/min]

Description: Sets the shutdown velocity for pulse suppression.

Below this velocity "standstill" is assumed and for STOP B / SS1, the pulses are suppressed (by changing to STOP A).

In the case of encoderless motion monitoring functions, the parameter must be > 0 (recommended value: 10).

Dependency: Refer to: p9356, p9560

Notice: This parameter is overwritten by the copy function of the safety functions integrated in the drive.

Note: SS1: Safe Stop 1

p9360 SI Motion pulse suppression shutdown speed (Motor Module) / SI Mtn IL n_sh MM

VECTOR_G (Safety rot)

Can be changed: C2(95)	**Calculated:** -	**Access level:** 3
Data type: FloatingPoint32	**Dynamic index:** -	**Func. diagram:** -
P-Group: Safety Integrated	**Units group:** -	**Unit selection:** -
Not for motor type: -	**Scaling:** -	**Expert list:** 1
Min	**Max**	**Factory setting**
0.00 [rpm]	6000.00 [rpm]	0.00 [rpm]

Description: Sets the shutdown speed for the pulse suppression.

Below this speed "standstill" is assumed and for STOP B / SS1, the pulses are suppressed (by changing to STOP A).

Dependency: Refer to: p9356, p9560

Notice: This parameter is overwritten by the copy function of the safety functions integrated in the drive.

Note: SS1: Safe Stop 1

p9362[0...1] SI Motion SLP stop response (Motor Module) / SI mtn SLP stop MM

VECTOR_G

Can be changed: C2(95)	**Calculated:** -	**Access level:** 3
Data type: Integer16	**Dynamic index:** -	**Func. diagram:** -
P-Group: Safety Integrated	**Units group:** -	**Unit selection:** -
Not for motor type: -	**Scaling:** -	**Expert list:** 1
Min	**Max**	**Factory setting**
0	14	2

Description: Sets the stop response for the function "Safely-Limited Position" (SLP).

Value:
0: STOP A
1: STOP B
2: STOP C
3: STOP D
4: STOP E
10: STOP A with delayed pulse suppression when the bus fails
11: STOP B with delayed pulse suppression when the bus fails
12: STOP C with delayed pulse suppression when the bus fails
13: STOP D with delayed pulse suppression when the bus fails
14: STOP E with delayed pulse suppression when the bus fails

Index:
[0] = Limit value SLP1 (SE1)
[1] = Limit value SLP2 (SE2)

Dependency: Refer to: p9534, p9535

Notice: This parameter is overwritten by the copy function of the safety functions integrated in the drive.

Note: SLP: Safely-Limited Position

© Siemens AG 2012 All Rights Reserved

p9363[0...3] SI Motion SLS stop response (Motor Module) / SI Mtn SLS Stop MM

VECTOR_G	**Can be changed:** C2(95)	**Calculated:** -	**Access level:** 3
	Data type: Integer16	**Dynamic index:** -	**Func. diagram:** -
	P-Group: Safety Integrated	**Units group:** -	**Unit selection:** -
	Not for motor type: -	**Scaling:** -	**Expert list:** 1
	Min	**Max**	**Factory setting**
	0	14	2

Description: Sets the stop response for the function "Safely-Limited Speed" (SLS).
These settings apply to the individual limit values for SLS.
In the case of encoderless motion monitoring (p9306 = 1), only a value of 0 or 1 is permitted.

Value:
0: STOP A
1: STOP B
2: STOP C
3: STOP D
4: STOP E
10: STOP A with delayed pulse suppression when the bus fails
11: STOP B with delayed pulse suppression when the bus fails
12: STOP C with delayed pulse suppression when the bus fails
13: STOP D with delayed pulse suppression when the bus fails
14: STOP E with delayed pulse suppression when the bus fails

Index:
[0] = Limit value SLS1
[1] = Limit value SLS2
[2] = Limit value SLS3
[3] = Limit value SLP4

Dependency: Refer to: p9331, p9380, p9563

Notice: This parameter is overwritten by the copy function of the safety functions integrated in the drive.

Note: In the extended sense, a bus failure should be seen here as a communication error in the control signals of the safety functions (e.g. via PROFIsafe or TM54F).
SLS: Safely-Limited Speed

p9364 SI Motion SDI tolerance (Motor Module) / SI Mtn SDI tol MM

VECTOR_G	**Can be changed:** C2(95)	**Calculated:** -	**Access level:** 3
	Data type: FloatingPoint32	**Dynamic index:** -	**Func. diagram:** 2861
	P-Group: Safety Integrated	**Units group:** -	**Unit selection:** -
	Not for motor type: -	**Scaling:** -	**Expert list:** 1
	Min	**Max**	**Factory setting**
	0.001 [mm]	360.000 [mm]	12.000 [mm]

Description: Sets the tolerance for the function "Safe motion direction" (SDI).
This motion in the monitored direction is still permissible before safety message C30716 is initiated.

Dependency: Refer to: p9365, p9366
Refer to: C30716

Notice: This parameter is overwritten by the copy function of the safety functions integrated in the drive.

Note: SDI: Safe Direction (safe motion direction)

p9364 SI Motion SDI tolerance (Motor Module) / SI Mtn SDI tol MM

VECTOR_G (Safety rot)	**Can be changed:** C2(95)	**Calculated:** -	**Access level:** 3
	Data type: FloatingPoint32	**Dynamic index:** -	**Func. diagram:** 2861
	P-Group: Safety Integrated	**Units group:** -	**Unit selection:** -
	Not for motor type: -	**Scaling:** -	**Expert list:** 1
	Min	**Max**	**Factory setting**
	0.001 [°]	360.000 [°]	12.000 [°]

Description: Sets the tolerance for the function "Safe motion direction" (SDI).
This motion in the monitored direction is still permissible before safety message C30716 is initiated.

© Siemens AG 2012 All Rights Reserved

Dependency: Refer to: p9365, p9366
Refer to: C30716
Notice: This parameter is overwritten by the copy function of the safety functions integrated in the drive.
Note: SDI: Safe Direction (safe motion direction)

p9365 SI Motion SDI delay time (Motor Module) / SI Mtn SDI t MM

VECTOR_G	**Can be changed:** C2(95)	**Calculated:** -	**Access level:** 3
	Data type: FloatingPoint32	**Dynamic index:** -	**Func. diagram:** 2861
	P-Group: Safety Integrated	**Units group:** -	**Unit selection:** -
	Not for motor type: -	**Scaling:** -	**Expert list:** 1
	Min	**Max**	**Factory setting**
	0.00 [µs]	600000000.00 [µs]	100000.00 [µs]

Description: Sets the delay time for the function "Safe motion direction" (SDI). When selecting the SDI function, motion in the monitored direction is permissible as a maximum for this time; this means that this time can be used for braking existing motion.
Dependency: Refer to: p9364, p9366
Refer to: C30716
Notice: This parameter is overwritten by the copy function of the safety functions integrated in the drive.
Note: SDI: Safe Direction (safe motion direction)

p9366 SI Motion SDI stop response (Motor Module) / SI Mtn SDI Stop MM

VECTOR_G	**Can be changed:** C2(95)	**Calculated:** -	**Access level:** 3
	Data type: Integer16	**Dynamic index:** -	**Func. diagram:** 2861
	P-Group: Safety Integrated	**Units group:** -	**Unit selection:** -
	Not for motor type: -	**Scaling:** -	**Expert list:** 1
	Min	**Max**	**Factory setting**
	0	14	1

Description: Sets the stop response for the function "Safe motion direction" (SDI).
This setting applies to both directions of motion.
In the case of encoderless motion monitoring (p9306 = 1), only a value of 0 or 1 is permitted.
Value:
0: STOP A
1: STOP B
2: STOP C
3: STOP D
4: STOP E
10: STOP A with delayed pulse suppression when the bus fails
11: STOP B with delayed pulse suppression when the bus fails
12: STOP C with delayed pulse suppression when the bus fails
13: STOP D with delayed pulse suppression when the bus fails
14: STOP E with delayed pulse suppression when the bus fails
Dependency: Refer to: p9364, p9365
Refer to: C30716
Notice: This parameter is overwritten by the copy function of the safety functions integrated in the drive.
Note: In the extended sense, a bus failure should be seen here as a communication error in the control signals of the safety functions (e.g. via PROFIsafe or TM54F).
SDI: Safe Direction (safe motion direction)

p9368 SI Motion SAM velocity limit (Motor Module) / SI Mtn SAM v_limMM

VECTOR_G	**Can be changed:** C2(95)	**Calculated:** -	**Access level:** 3
	Data type: FloatingPoint32	**Dynamic index:** -	**Func. diagram:** -
	P-Group: Safety Integrated	**Units group:** -	**Unit selection:** -
	Not for motor type: -	**Scaling:** -	**Expert list:** 1
	Min	**Max**	**Factory setting**
	0.00 [mm/min]	1000.00 [mm/min]	0.00 [mm/min]

Description: Sets the velocity tolerance limit for the "SAM" function.

© Siemens AG 2012 All Rights Reserved

SAM is de-activated once the set velocity limit has been undershot.

Notice: This parameter is overwritten by the copy function of the safety functions integrated in the drive.

Note: SAM: Safe Acceleration Monitor (safe acceleration monitoring)
SSM: Safe Speed Monitor (safety-relevant feedback signal from the velocity monitoring)
For p9568 = p9368 = 0, the following applies:
The value in p9546/p9346 (SSM) is applied as the velocity limit for SAM.

p9368 SI Motion SAM velocity limit (Motor Module) / SI Mtn SAM v_limMM

VECTOR_G (Safety rot)

Can be changed: C2(95)	**Calculated:** -	**Access level:** 3
Data type: FloatingPoint32	**Dynamic index:** -	**Func. diagram:** -
P-Group: Safety Integrated	**Units group:** -	**Unit selection:** -
Not for motor type: -	**Scaling:** -	**Expert list:** 1
Min	**Max**	**Factory setting**
0.00 [rpm]	1000.00 [rpm]	0.00 [rpm]

Description: Sets the velocity tolerance limit for the "SAM" function.
SAM is de-activated once the set velocity limit has been undershot.

Notice: This parameter is overwritten by the copy function of the safety functions integrated in the drive.

Note: SAM: Safe Acceleration Monitor (safe acceleration monitoring)
SSM: Safe Speed Monitor (safety-relevant feedback signal from the velocity monitoring)
For p9568 = p9368 = 0, the following applies:
The value in p9546/p9346 (SSM) is applied as the velocity limit for SAM.

p9370 SI Motion acceptance test mode (Motor Module) / SI Mtn acc_mod MM

VECTOR_G

Can be changed: U, T	**Calculated:** -	**Access level:** 3
Data type: Integer16	**Dynamic index:** -	**Func. diagram:** -
P-Group: Safety Integrated	**Units group:** -	**Unit selection:** -
Not for motor type: -	**Scaling:** -	**Expert list:** 1
Min	**Max**	**Factory setting**
0000 hex	00AC hex	0000 hex

Description: Setting to select and de-select the acceptance test mode.

Value:
0: [00 hex] De-select the acceptance test mode
172: [AC hex] Select the acceptance test mode

Dependency: Refer to: p9358, r9371
Refer to: C01799

Note: Acceptance test mode can only be selected if the motion monitoring functions, which are integrated in the drives, are enabled (p9601.2/p9801.2).

r9371 SI Motion acceptance test status (Motor Module) / SI Mtn acc_stat MM

VECTOR_G

Can be changed: -	**Calculated:** -	**Access level:** 3
Data type: Integer16	**Dynamic index:** -	**Func. diagram:** -
P-Group: Safety Integrated	**Units group:** -	**Unit selection:** -
Not for motor type: -	**Scaling:** -	**Expert list:** 1
Min	**Max**	**Factory setting**
0000 hex	00AC hex	-

Description: Displays the status of the acceptance test mode.

Value:
0: [00 hex] Acc_mode inactive
12: [0C hex] Acc_mode not possible due to POWER ON fault
13: [0D hex] Acc_mode not possible due to incorrect ID in p9370
15: [0F hex] Acc_mode not possible due to expired Acc_timer
172: [AC hex] Acc_mode active

Dependency: Refer to: p9358, p9370
Refer to: C01799

© Siemens AG 2012 All Rights Reserved

p9374 SI Motion safe position scaling (Motor Module) / SI mtn SP scal MM

VECTOR_G

Can be changed: C2(95)	**Calculated:** -	**Access level:** 3
Data type: Integer32	**Dynamic index:** -	**Func. diagram:** -
P-Group: Safety Integrated	**Units group:** -	**Unit selection:** -
Not for motor type: -	**Scaling:** -	**Expert list:** 1
Min	**Max**	**Factory setting**
1	100000	1000

Description: Sets the scaling factor to transfer the safe position via PROFIsafe in the 16-bit notation.

Dependency: Refer to: r9713

Notice: This parameter is overwritten by the copy function of the safety functions integrated in the drive.

Note: The parameter is only effective when PROFIsafe telegram 901 is selected.

By selecting a suitable scaling of the 32 bit position actual value (r9713[0]), it must be ensured that the scaled position actual value is not greater than 16 bit. The scaling is realized by dividing r9713[0] with this scaling factor.

If, during operation, a position actual value is determined, which cannot be scaled to the 16 bits, then message C30711 with value 7001 is output and safety stop response STOP F.

p9380 SI Motion pulse suppression delay bus failure (Motor Module) / SI Mtn t to IL MM

VECTOR_G

Can be changed: C2(95)	**Calculated:** -	**Access level:** 3
Data type: FloatingPoint32	**Dynamic index:** -	**Func. diagram:** -
P-Group: Safety Integrated	**Units group:** -	**Unit selection:** -
Not for motor type: -	**Scaling:** -	**Expert list:** 1
Min	**Max**	**Factory setting**
0.00 [µs]	800000.00 [µs]	0.00 [µs]

Description: Sets the delay time after which the pulses are safely suppressed after a bus failure.

Dependency: Refer to: p9363

Notice: This parameter is overwritten by the copy function of the safety functions integrated in the drive.

Note: In the extended sense, a bus failure should be seen here as a communication error in the control signals of the safety functions (e.g. via PROFIsafe or TM54F).

The main use of the wait time is the ESR function (Extended Stop and Retract).

p9381 SI Motion brake ramp reference value (Motor Module) / SI Mtn ramp ref MM

VECTOR_G

Can be changed: C2(95)	**Calculated:** -	**Access level:** 3
Data type: FloatingPoint32	**Dynamic index:** -	**Func. diagram:** -
P-Group: Safety Integrated	**Units group:** -	**Unit selection:** -
Not for motor type: -	**Scaling:** -	**Expert list:** 1
Min	**Max**	**Factory setting**
600.0000 [mm/min]	240000.0000 [mm/min]	1500.0000 [mm/min]

Description: Sets the reference value to define the brake ramp.

The rate of rise of the brake ramp depends upon p9381 (reference value) and p9383 (monitoring time).

Dependency: Refer to: p9382, p9383

Notice: This parameter is overwritten by the copy function of the safety functions integrated in the drive.

p9381 SI Motion brake ramp reference value (Motor Module) / SI Mtn ramp ref MM

VECTOR_G (Safety rot)

Can be changed: C2(95)	**Calculated:** -	**Access level:** 3
Data type: FloatingPoint32	**Dynamic index:** -	**Func. diagram:** -
P-Group: Safety Integrated	**Units group:** -	**Unit selection:** -
Not for motor type: -	**Scaling:** -	**Expert list:** 1
Min	**Max**	**Factory setting**
600.0000 [rpm]	240000.0000 [rpm]	1500.0000 [rpm]

Description: Sets the reference value to define the brake ramp.

The rate of rise of the brake ramp depends upon p9381 (reference value) and p9383 (monitoring time).

Dependency: Refer to: p9382, p9383

© Siemens AG 2012 All Rights Reserved

Notice: This parameter is overwritten by the copy function of the safety functions integrated in the drive.

p9382 SI Motion brake ramp delay time (Motor Module) / SI Mtn rp t_del MM

VECTOR_G	**Can be changed:** C2(95)	**Calculated:** -	**Access level:** 3
	Data type: FloatingPoint32	**Dynamic index:** -	**Func. diagram:** -
	P-Group: Safety Integrated	**Units group:** -	**Unit selection:** -
	Not for motor type: -	**Scaling:** -	**Expert list:** 1
	Min	**Max**	**Factory setting**
	10000.00 [µs]	99000000.00 [µs]	250000.00 [µs]

Description: Sets the delay time for monitoring the brake ramp.
Monitoring of the brake ramp starts once the delay time has elapsed.

Dependency: Refer to: p9381, p9383

Notice: This parameter is overwritten by the copy function of the safety functions integrated in the drive.

p9383 SI Motion brake ramp monitoring time (Motor Module) / SI Mtn rp t_mon MM

VECTOR_G	**Can be changed:** C2(95)	**Calculated:** -	**Access level:** 3
	Data type: FloatingPoint32	**Dynamic index:** -	**Func. diagram:** -
	P-Group: Safety Integrated	**Units group:** -	**Unit selection:** -
	Not for motor type: -	**Scaling:** -	**Expert list:** 1
	Min	**Max**	**Factory setting**
	500.00 [ms]	3600000.00 [ms]	10000.00 [ms]

Description: Sets the monitoring time to define the brake ramp.
The rate of rise of the brake ramp depends upon p9381 (reference value) and p9383 (monitoring time).

Dependency: Refer to: p9381, p9382

Notice: This parameter is overwritten by the copy function of the safety functions integrated in the drive.

p9385 SI Motion fault tolerance actual value sensing sensorless (MM) / SI mtn SI to sl MM

VECTOR_G	**Can be changed:** C2(95)	**Calculated:** -	**Access level:** 3
	Data type: Integer32	**Dynamic index:** -	**Func. diagram:** -
	P-Group: Safety Integrated	**Units group:** -	**Unit selection:** -
	Not for motor type: -	**Scaling:** -	**Expert list:** 1
	Min	**Max**	**Factory setting**
	-1	4	-1

Description: Sets the tolerance of the plausibility monitoring of the current and voltage angle
p9385 = 4 must be parameterized for synchronous motors.

Dependency: Refer to: p9507
Refer to: C01711, F30681

Notice: This parameter is overwritten by the copy function of the safety functions integrated in the drive.
Reducing this value can adversely affect the actual value sensing and the plausibility check.
When the value is increased, this results in a longer evaluation delay.

Note: This parameter is only effective for encoderless actual value sensing (p9506/p9306 = 1, 3).
For a value of -1, for synchronous motors, the value 4 is used automatically for the calculation – and for induction motors, the value 0.

p9386 SI Motion delay time of the evaluation sensorless (MM) / SI Mtn t_del SL MM

VECTOR_G	**Can be changed:** C2(95)	**Calculated:** -	**Access level:** 3
	Data type: FloatingPoint32	**Dynamic index:** -	**Func. diagram:** -
	P-Group: Safety Integrated	**Units group:** -	**Unit selection:** -
	Not for motor type: -	**Scaling:** -	**Expert list:** 1
	Min	**Max**	**Factory setting**
	5.00 [ms]	1000.00 [ms]	100.00 [ms]

Description: Sets the evaluation delay for encoderless actual value sensing after pulse enable.
The value should be greater than or equal to the motor magnetizing time.

© Siemens AG 2012 All Rights Reserved

Dependency: Refer to: C30711

Notice: This parameter is overwritten by the copy function of the safety functions integrated in the drive.
If this value is reduced, this can have a negative impact on the actual value acquisition and plausibility check – and result in Safety message C30711 with the message value 1041 or 1042.
When the value is increased, this results in a longer evaluation delay.

Note: This parameter is only effective for encoderless actual value sensing (p9506/p9306 = 1, 3).

p9387 SI Motion act val sensing encoderless filter time (Motor Module) / SI Mtn SL filt MM

VECTOR_G	**Can be changed:** C2(95)	**Calculated:** -	**Access level:** 3
	Data type: FloatingPoint32	**Dynamic index:** -	**Func. diagram:** -
	P-Group: Safety Integrated	**Units group:** -	**Unit selection:** -
	Not for motor type: -	**Scaling:** -	**Expert list:** 1
	Min	**Max**	**Factory setting**
	0.00 [µs]	100000.00 [µs]	25000.00 [µs]

Description: Sets the filter time for smoothing the actual value with sensorless actual value sensing.

Notice: This parameter is overwritten by the copy function of the safety functions integrated in the drive.

Note: This parameter is only effective for encoderless actual value sensing (p9506/p9306 = 1, 3).

p9388 SI Motion act val sensing encoderless min current (Motor Module) / SI Mtn SL I_min MM

VECTOR_G	**Can be changed:** C2(95)	**Calculated:** -	**Access level:** 3
	Data type: FloatingPoint32	**Dynamic index:** -	**Func. diagram:** -
	P-Group: Safety Integrated	**Units group:** -	**Unit selection:** -
	Not for motor type: -	**Scaling:** -	**Expert list:** 1
	Min	**Max**	**Factory setting**
	0.00 [%]	1000.00 [%]	10.00 [%]

Description: Sets the minimum current for encoderless actual value sensing in reference to 10 mA (i.e. when 1 % = 10 mA).
- The value must be increased if C30711 has occurred with message value 1042.
- The value must be decreased if C30711 has occurred with message value 1041.

Dependency: Refer to: C30711

Notice: This parameter is overwritten by the copy function of the safety functions integrated in the drive.
Reducing this percentage value can adversely affect actual value sensing.

Note: This parameter is only effective for encoderless actual value sensing (p9506/p9306 = 1, 3).

p9389 SI Motion voltage tolerance acceleration (Motor Module) / SI Mtn U tol MM

VECTOR_G	**Can be changed:** C2(95)	**Calculated:** -	**Access level:** 3
	Data type: FloatingPoint32	**Dynamic index:** -	**Func. diagram:** -
	P-Group: Safety Integrated	**Units group:** -	**Unit selection:** -
	Not for motor type: -	**Scaling:** -	**Expert list:** 1
	Min	**Max**	**Factory setting**
	10.00 [%]	3300.00 [%]	100.00 [%]

Description: Sets the voltage tolerance for suppressing acceleration peaks.
An increase in this percentage value means that voltage peaks will need to have a higher amplitude when accelerating if they are not to affect actual value sensing.
- The value must be increased if C30711 with message value 1042 has occurred.
- The value must be lowered if acceleration procedures have led to an excessive Safety actual velocity.

Dependency: Refer to: C30711

Notice: This parameter is overwritten by the copy function of the safety functions integrated in the drive.

Note: This parameter is only effective for encoderless actual value sensing (p9506/p9306 = 1, 3).

© Siemens AG 2012 All Rights Reserved

r9390[0...3] SI Motion version safety motion monitoring (Motor Module) / SI Mtn Version MM

VECTOR_G	**Can be changed:** -	**Calculated:** -	**Access level:** 3
	Data type: Unsigned16	**Dynamic index:** -	**Func. diagram:** -
	P-Group: Safety Integrated	**Units group:** -	**Unit selection:** -
	Not for motor type: -	**Scaling:** -	**Expert list:** 1
	Min	**Max**	**Factory setting**
	-	-	-

Description: Displays the Safety Integrated version for the safe monitoring functions.

Index:
[0] = Safety Version (major release)
[1] = Safety Version (minor release)
[2] = Safety Version (baselevel or patch)
[3] = Safety Version (hotfix)

Dependency: Refer to: r9590, r9770, r9870, r9890

Note: Example:
r9390[0] = 2, r9390[1] = 60, r9390[2] = 1, r9390[3] = 0 --> SI Motion version V02.60.01.00

r9398[0...1] SI Motion actual checksum SI parameters (Motor Module) / SI Mtn act CRC MM

VECTOR_G	**Can be changed:** -	**Calculated:** -	**Access level:** 3
	Data type: Unsigned32	**Dynamic index:** -	**Func. diagram:** -
	P-Group: Safety Integrated	**Units group:** -	**Unit selection:** -
	Not for motor type: -	**Scaling:** -	**Expert list:** 1
	Min	**Max**	**Factory setting**
	-	-	-

Description: Displays the checksum for the checked Safety Integrated parameters of the motion monitoring function (actual checksum) on the Motor Module.

Index:
[0] = Checksum over SI parameters for motion monitoring
[1] = Checksum over SI parameters with hardware reference

Dependency: Refer to: p9399

Note: SI: Safety Integrated

p9399[0...1] SI Motion reference checksum SI parameters (Motor Module) / SI Mtn setp CRC MM

VECTOR_G	**Can be changed:** C2(95)	**Calculated:** -	**Access level:** 3
	Data type: Unsigned32	**Dynamic index:** -	**Func. diagram:** -
	P-Group: Safety Integrated	**Units group:** -	**Unit selection:** -
	Not for motor type: -	**Scaling:** -	**Expert list:** 1
	Min	**Max**	**Factory setting**
	0000 hex	FFFF FFFF hex	0000 hex

Description: Sets the checksum for the checked Safety Integrated parameters of the motion monitoring functions (reference checksum) on the Motor Module.

Index:
[0] = Checksum over SI parameters for motion monitoring
[1] = Checksum over SI parameters with hardware reference

Dependency: Refer to: r9398

Note: SI: Safety Integrated

r9406[0...19] PS file parameter number parameter not transferred / PS par_no n transf

All objects	**Can be changed:** -	**Calculated:** -	**Access level:** 4
	Data type: Unsigned16	**Dynamic index:** -	**Func. diagram:** -
	P-Group: -	**Units group:** -	**Unit selection:** -
	Not for motor type: -	**Scaling:** -	**Expert list:** 1
	Min	**Max**	**Factory setting**
	-	-	-

Description: Displays the parameters that were not able to be transferred when reading the parameter back-up files (PS files) from the non-volatile memory (e.g. memory card).

© Siemens AG 2012 All Rights Reserved

r9406[0] = 0
--> All of the parameter values were able to be transferred error-free.
r9406[0...x] > 0
--> indicates the parameter number in the following cases:
- parameter, whose value was not able to be completely accepted.
- indexed parameter, where at least 1 index was not able to be accepted. The first index that is not transferred is displayed in r9407.

Dependency: Refer to: r9407, r9408

Note: All indices from r9406 to r9408 designate the same parameter.
r9406[x] parameter number, parameter not accepted
r9407[x] parameter index, parameter not accepted
r9408[x] fault code, parameter not accepted

r9407[0...19] PS file parameter index parameter not transferred / PS parameter index

All objects

Can be changed: -	**Calculated:** -	**Access level:** 1
Data type: Unsigned16	**Dynamic index:** -	**Func. diagram:** -
P-Group: -	**Units group:** -	**Unit selection:** -
Not for motor type: -	**Scaling:** -	**Expert list:** 1
Min	**Max**	**Factory setting**
-	-	-

Description: Displays the first index of the parameters that could not be transferred when the parameter backup files (PS files) were read from the non-volatile memory (e.g. memory card).
If, from an indexed parameter, at least one index was not able to be transferred, then the parameter number is displayed in r9406[n] and the first index that was not transferred is displayed in r9407[n].
r9406[0] = 0
--> All of the parameter values were able to be transferred error-free.
r9406[n] > 0
--> Displays r9407[n] the first index of the parameter number r9406[n] that was not transferred.

Dependency: Refer to: r9406, r9408

Note: All indices from r9406 to r9408 designate the same parameter.
r9406[x] parameter number, parameter not accepted
r9407[x] parameter index, parameter not accepted
r9408[x] fault code, parameter not accepted

r9408[0...19] PS file fault code parameter not transferred / PS fault code

All objects

Can be changed: -	**Calculated:** -	**Access level:** 1
Data type: Unsigned16	**Dynamic index:** -	**Func. diagram:** -
P-Group: -	**Units group:** -	**Unit selection:** -
Not for motor type: -	**Scaling:** -	**Expert list:** 1
Min	**Max**	**Factory setting**
-	-	-

Description: Only for internal Siemens service purposes.

Dependency: Refer to: r9406, r9407

Note: All indices from r9406 to r9408 designate the same parameter.
r9406[x] parameter number, parameter not accepted
r9407[x] parameter index, parameter not accepted
r9408[x] fault code, parameter not accepted

© Siemens AG 2012 All Rights Reserved

r9409 Number of parameters to be saved / Qty par to save

All objects

Can be changed: -	**Calculated:** -	**Access level:** 4
Data type: Unsigned16	**Dynamic index:** -	**Func. diagram:** -
P-Group: -	**Units group:** -	**Unit selection:** -
Not for motor type: -	**Scaling:** -	**Expert list:** 1
Min	**Max**	**Factory setting**
-	-	-

Description: Displays the number of modified parameters and those that have still not be saved for this drive object.

Dependency: Refer to: p0971, p0977

Notice: Inherent to the system, the list of the parameters to be backed up is empty after the following actions:
- Download
- Warm restart
- Factory setting

In these cases, a new parameter backup must be initiated, which is then the starting point for the list of modified parameters.

Note: The modified parameters that still need to be saved are internally listed in r9410 ... r9419.

r9450[0...29] Reference value change parameter with unsuccessful calculation / Ref_chg par n poss

B_INF, ENC, VECTOR_G

Can be changed: -	**Calculated:** -	**Access level:** 2
Data type: Unsigned32	**Dynamic index:** -	**Func. diagram:** -
P-Group: -	**Units group:** -	**Unit selection:** -
Not for motor type: -	**Scaling:** -	**Expert list:** 1
Min	**Max**	**Factory setting**
-	-	-

Description: Displays the parameters for which the re-calculation was unsuccessful after an internal system reference value change.

Dependency: Refer to: F07086

r9451[0...29] Units changeover adapted parameters / Unit_chngov par

B_INF, ENC, VECTOR_G

Can be changed: -	**Calculated:** -	**Access level:** 1
Data type: Unsigned32	**Dynamic index:** -	**Func. diagram:** -
P-Group: -	**Units group:** -	**Unit selection:** -
Not for motor type: -	**Scaling:** -	**Expert list:** 1
Min	**Max**	**Factory setting**
-	-	-

Description: Displays the parameters whose parameter would have to be changed during a units changeover.

Dependency: Refer to: F07088

r9481 Number of BICO interconnections / BICO count

B_INF, CU_G130_DP, CU_G130_PN, CU_G150_DP, CU_G150_PN, ENC, TB30, TM150, TM31, TM54F_MA, TM54F_SL, VECTOR_G

Can be changed: -	**Calculated:** -	**Access level:** 3
Data type: Unsigned16	**Dynamic index:** -	**Func. diagram:** -
P-Group: Commands	**Units group:** -	**Unit selection:** -
Not for motor type: -	**Scaling:** -	**Expert list:** 0
Min	**Max**	**Factory setting**
-	-	-

Description: Displays the number of BICO interconnections (signal sinks).

Dependency: Refer to: r9482, r9483

© Siemens AG 2012 All Rights Reserved

Note: The selected BICO interconnections should be entered into r9482 and r9483.

r9482[0...n] BICO interconnections BI/CI parameters / BICO BI/CI par

B_INF, CU_G130_DP, CU_G130_PN, CU_G150_DP, CU_G150_PN, ENC, TB30, TM150, TM31, TM54F_MA, TM54F_SL, VECTOR_G	**Can be changed:** -	**Calculated:** -	**Access level:** 3
	Data type: Unsigned32	**Dynamic index:** r9481	**Func. diagram:** -
	P-Group: Commands	**Units group:** -	**Unit selection:** -
	Not for motor type: -	**Scaling:** -	**Expert list:** 0

Min	Max	Factory setting
-	-	-

Description: Displays the signal sinks (binector/connector inputs, BI/CI parameters).
The number of BICO interconnections is displayed in r9481.

Dependency: Refer to: r9481, r9483

Note: The list is sorted according to signal sources and is structured as follows:
r9842[0]: Interconnection 1 (signal sink, BICO coded), r9843[0]: Interconnection 1 (signal source, BICO coded)
r9842[1]: Interconnection 2 (signal sink, BICO coded), r9843[1]: Interconnection 2 (signal source, BICO coded)
...

r9483[0...n] BICO interconnections BO/CO parameters / BICO BO/CO par

B_INF, CU_G130_DP, CU_G130_PN, CU_G150_DP, CU_G150_PN, ENC, TB30, TM150, TM31, TM54F_MA, TM54F_SL, VECTOR_G	**Can be changed:** -	**Calculated:** -	**Access level:** 3
	Data type: Unsigned32	**Dynamic index:** r9481	**Func. diagram:** -
	P-Group: Commands	**Units group:** -	**Unit selection:** -
	Not for motor type: -	**Scaling:** -	**Expert list:** 0

Min	Max	Factory setting
-	-	-

Description: Displays the signal sources (binector/connector outputs, BO/CO parameters).
The number of BICO interconnections is displayed in r9481.

Dependency: Refer to: r9481, r9482

Note: The list is sorted according to signal sources and is structured as follows:
r9842[0]: Interconnection 1 (signal sink, BICO coded), r9843[0]: Interconnection 1 (signal source, BICO coded)
r9842[1]: Interconnection 2 (signal sink, BICO coded), r9843[1]: Interconnection 2 (signal source, BICO coded)
...

p9484 BICO interconnections search signal source / BICO S_src srch

B_INF, CU_G130_DP, CU_G130_PN, CU_G150_DP, CU_G150_PN, ENC, TB30, TM150, TM31, TM54F_MA, TM54F_SL, VECTOR_G	**Can be changed:** U, T	**Calculated:** -	**Access level:** 3
	Data type: Unsigned32	**Dynamic index:** -	**Func. diagram:** -
	P-Group: -	**Units group:** -	**Unit selection:** -
	Not for motor type: -	**Scaling:** -	**Expert list:** 0

Min	Max	Factory setting
0	4294967295	0

Description: Sets the signal source (BO/CO parameter, BICO coded) to search in the signal sinks.

© Siemens AG 2012 All Rights Reserved

The question is answered:
How often is a connection made to a signal source in the drive object and from which index are these interconnections saved (r9482 and r9483)?

Dependency: Refer to: r9481, r9482, r9483, r9485, r9486

r9485 BICO interconnections signal source search count / BICO S_src srchQty

B_INF, CU_G130_DP, CU_G130_PN, CU_G150_DP, CU_G150_PN, ENC, TB30, TM150, TM31, TM54F_MA, TM54F_SL, VECTOR_G

Can be changed: -	**Calculated:** -	**Access level:** 3
Data type: Unsigned16	**Dynamic index:** -	**Func. diagram:** -
P-Group: -	**Units group:** -	**Unit selection:** -
Not for motor type: -	**Scaling:** -	**Expert list:** 0

Min	Max	Factory setting
-	-	-

Description: Displays the number of BICO interconnections to the signal sink being searched for.

Dependency: Refer to: r9481, r9482, r9483, p9484, r9486

Note: The signal source to be searched is set in p9484 (BICO-coded).
The search result is contained in r9482 and r9483 and is specified by the count (r9485) and the first index (r9486).

r9486 BICO interconnections signal source search first index / BICO S_src srchIdx

B_INF, CU_G130_DP, CU_G130_PN, CU_G150_DP, CU_G150_PN, ENC, TB30, TM150, TM31, TM54F_MA, TM54F_SL, VECTOR_G

Can be changed: -	**Calculated:** -	**Access level:** 3
Data type: Unsigned16	**Dynamic index:** -	**Func. diagram:** -
P-Group: -	**Units group:** -	**Unit selection:** -
Not for motor type: -	**Scaling:** -	**Expert list:** 0

Min	Max	Factory setting
-	-	-

Description: Displays the first index of the signal source being searched for.

Dependency: Refer to: r9481, r9482, r9483, p9484, r9485

Note: The signal source to be searched is set in p9484 (BICO-coded).
The search result is contained in r9482 and r9483 and is specified by the count (r9485) and the first index (r9486).

r9490 Number of BICO interconnections to other drives / Qty BICO to drive

All objects

Can be changed: -	**Calculated:** -	**Access level:** 3
Data type: Unsigned16	**Dynamic index:** -	**Func. diagram:** -
P-Group: Commands	**Units group:** -	**Unit selection:** -
Not for motor type: -	**Scaling:** -	**Expert list:** 1

Min	Max	Factory setting
-	-	-

Description: Displays the number of signal sources from this drive to other drives/drive objects (Binector Output/Connector Output, BO/CO).

Dependency: Refer to: r9491, r9492, p9493

© Siemens AG 2012 All Rights Reserved

r9491[0...9] BI/CI of BICO interconnections to other drives / BI/CI to drive

All objects	**Can be changed:** -	**Calculated:** -	**Access level:** 3
	Data type: Unsigned32	**Dynamic index:** -	**Func. diagram:** -
	P-Group: Commands	**Units group:** -	**Unit selection:** -
	Not for motor type: -	**Scaling:** -	**Expert list:** 1
	Min	**Max**	**Factory setting**
	-	-	-

Description: Displays the signal receiver list (Binector Input/Connector Input, BI/CI) for the first interconnections between this drive and other drives/drive objects.

Dependency: Refer to: r9490, r9492, p9493

Notice: A drive cannot be deleted if this list is not empty! Otherwise, another drive would continue to attempt to read a signal from a drive that no longer existed.

Note: All indices of r9491 to p9493 designate the same interconnection.

r9491[x] contains the signal receiver and r9492[x] the matching signal source; p9493[x] can be set to modify the interconnection.

r9492[0...9] BO/CO of BICO interconnections to other drives / BO/CO to drive

All objects	**Can be changed:** -	**Calculated:** -	**Access level:** 3
	Data type: Unsigned32	**Dynamic index:** -	**Func. diagram:** -
	P-Group: Commands	**Units group:** -	**Unit selection:** -
	Not for motor type: -	**Scaling:** -	**Expert list:** 1
	Min	**Max**	**Factory setting**
	-	-	-

Description: Displays the signal source list (Binector Output/Connector Output, BO/CO) for the first interconnections between this drive and other drives/drive objects.

Dependency: Refer to: r9490, r9491, p9493

Notice: A drive cannot be deleted if this list is not empty! Otherwise, another drive would continue to attempt to read a signal from a drive that no longer existed.

Note: All indices of r9491 to p9493 designate the same interconnection.

r9491[x] contains the signal receiver and r9492[x] the matching signal source; p9493[x] can be set to modify the interconnection.

p9493[0...9] Reset BICO interconnections to other drives / Reset BICO to drv

All objects	**Can be changed:** T	**Calculated:** -	**Access level:** 3
	Data type: Integer16	**Dynamic index:** -	**Func. diagram:** -
	P-Group: -	**Units group:** -	**Unit selection:** -
	Not for motor type: -	**Scaling:** -	**Expert list:** 1
	Min	**Max**	**Factory setting**
	0	15	15

Description: Setting to reset the BICO interconnections to other drives. Each interconnection can be individually reset.

Value:
0: Set connection to 0
1: Set connection to 1 (100 %)
2: Set connection to factory setting
15: Finished

Dependency: Refer to: r9490, r9491, r9492

Note: All indices of r9491 to p9493 designate the same interconnection.

r9491[x] contains the signal receiver and r9492[x] the matching signal source; p9493[x] can be set to modify the interconnection.

© Siemens AG 2012 All Rights Reserved

p9495 BICO behavior for de-activated drive objects / Behav for deact DO

B_INF, CU_G130_DP, CU_G130_PN, CU_G150_DP, CU_G150_PN, ENC, TB30, TM150, TM31, VECTOR_G	**Can be changed:** T	**Calculated:** -	**Access level:** 3
	Data type: Integer16	**Dynamic index:** -	**Func. diagram:** -
	P-Group: -	**Units group:** -	**Unit selection:** -
	Not for motor type: -	**Scaling:** -	**Expert list:** 1

Min	Max	Factory setting
0	2	0

Description: Sets the behavior for BICO interconnections to drive objects that are either not capable of operation or have been deactivated.

BO/CO parameters are on the drive object that is either not capable of operation or has been deactivated (signal source).

Value:
0: Inactive
1: Save interconnections
2: Save interconnections and establish the factory setting

Dependency: Refer to: p9496, p9497, p9498, p9499

Refer to: A01318, A01507

Note: For p9495 = 0, the following applies:

- the number of interconnections is zero (p9497 = 0).

For p9495 not equal to 0, the following applies:

- the BI/CI parameters involved are listed in p9498[0...29] (signal sink).
- the associated BO/CO parameters are listed in p9499[0...29] (signal source).

p9496 BICO behavior when activating drive objects / Behav when act DO

B_INF, CU_G130_DP, CU_G130_PN, CU_G150_DP, CU_G150_PN, ENC, TB30, TM150, TM31, VECTOR_G	**Can be changed:** T	**Calculated:** -	**Access level:** 3
	Data type: Integer16	**Dynamic index:** -	**Func. diagram:** -
	P-Group: -	**Units group:** -	**Unit selection:** -
	Not for motor type: -	**Scaling:** -	**Expert list:** 1

Min	Max	Factory setting
0	2	0

Description: Sets the behavior when activating BICO interconnections to drive objects that are either not capable of operation or have been deactivated.

Value:
0: Inactive
1: Restore the interconnections from the list
2: Delete the interconnections from the list

Dependency: Refer to: p9495, p9497, p9498, p9499

Refer to: A01318, A01507

Note: The BI/CI parameters involved are listed in p9498[0...29] (signal sink).

The associated BO/CO parameters are listed in p9499[0...29] (signal source).

After p9496 = 1, 2 the following applies:

- p9497 = 0
- p9496 = 0

© Siemens AG 2012 All Rights Reserved

p9497 BICO interconnections to de-activated drive objects number / Interconn obj qty

B_INF, CU_G130_DP, CU_G130_PN, CU_G150_DP, CU_G150_PN, ENC, TB30, TM150, TM31, VECTOR_G	**Can be changed:** T	**Calculated:** -	**Access level:** 3
	Data type: Unsigned16	**Dynamic index:** -	**Func. diagram:** -
	P-Group: Commands	**Units group:** -	**Unit selection:** -
	Not for motor type: -	**Scaling:** -	**Expert list:** 1

Min	Max	Factory setting
0	65535	0

Description: Displays the number of saved BICO interconnections to drive objects that are either not capable of operation or have been deactivated.

BO/CO parameters are on the drive object that is either not capable of operation or has been deactivated (signal source).

Dependency: Refer to: p9495, p9496, p9498, p9499

Refer to: A01318, A01507

p9498[0...29] BICO BI/CI parameters to de-activated drive objects / BI/CI to deact obj

B_INF, CU_G130_DP, CU_G130_PN, CU_G150_DP, CU_G150_PN, ENC, TB30, TM150, TM31, VECTOR_G	**Can be changed:** T	**Calculated:** -	**Access level:** 3
	Data type: Unsigned32	**Dynamic index:** -	**Func. diagram:** -
	P-Group: Commands	**Units group:** -	**Unit selection:** -
	Not for motor type: -	**Scaling:** -	**Expert list:** 1

Min	Max	Factory setting
-	-	0

Description: Displays the saved BI/CI parameters (signal sink), whose source is located on drive objects that are either not capable of operation or have been deactivated.

Dependency: Refer to: p9495, p9496, p9497, p9499

Refer to: A01318, A01507

Note: A BICO interconnection (signal sink, signal source) is displayed in the same index of p9498 and p9499.

p9499[0...29] BICO BO/CO parameters to de-activated drive objects / BO/CO to deact obj

B_INF, CU_G130_DP, CU_G130_PN, CU_G150_DP, CU_G150_PN, ENC, TB30, TM150, TM31, VECTOR_G	**Can be changed:** T	**Calculated:** -	**Access level:** 3
	Data type: Unsigned32	**Dynamic index:** -	**Func. diagram:** -
	P-Group: Commands	**Units group:** -	**Unit selection:** -
	Not for motor type: -	**Scaling:** -	**Expert list:** 1

Min	Max	Factory setting
-	-	0

Description: Displays the saved BO/CO parameters (signal source), which are located on drive objects that are either not capable of operation or have been deactivated.

Dependency: Refer to: p9495, p9496, p9497, p9498

Refer to: A01318, A01507

Note: A BICO interconnection (signal sink, signal source) is displayed in the same index of p9498 and p9499.

© Siemens AG 2012 All Rights Reserved

p9500 SI Motion monitoring clock cycle (Control Unit) / SI Mtn clock CU

VECTOR_G

Can be changed: C2(95)	**Calculated:** -	**Access level:** 3
Data type: FloatingPoint32	**Dynamic index:** -	**Func. diagram:** -
P-Group: Safety Integrated	**Units group:** -	**Unit selection:** -
Not for motor type: -	**Scaling:** -	**Expert list:** 1
Min	**Max**	**Factory setting**
0.50 [ms]	25.00 [ms]	12.00 [ms]

Description: Sets the monitoring clock cycle for safe motion monitoring.

Dependency: Refer to: r2064, p9511
Refer to: F01652

Note: A change only becomes effective after a POWER ON.
The monitoring clock cycle must be a multiple of the actual value sensing clock cycle in p9511 (dbSI) or of the DP clock cycle (ncSI).

p9501 SI Motion enable safety functions (Control Unit) / SI Mtn enable CU

VECTOR_G

Can be changed: C2(95)	**Calculated:** -	**Access level:** 3
Data type: Unsigned32	**Dynamic index:** -	**Func. diagram:** -
P-Group: Safety Integrated	**Units group:** -	**Unit selection:** -
Not for motor type: -	**Scaling:** -	**Expert list:** 1
Min	**Max**	**Factory setting**
-	-	0000 0000 0000 0000 0000 0000 0000 0000 bin

Description: Sets the enable signals for the safe motion monitoring.

Bit field:

Bit	Signal name	1 signal	0 signal	FP
00	Enable SOS/SLS (SBH/SG)	Enable	Inhibit	-
01	Enable SLP (SE)	Enable	Inhibit	-
02	Enable absolute position	Enable	Inhibit	-
03	Enable actual value synchronization	Enable	Inhibit	-
16	Enable SSM (n < nx) hysteresis and filtering	Enable	Inhibit	2860
17	Enable SDI	Enable	Inhibit	2861
24	Enable transfer SLS (SG) limit value via PROFIsafe	Enable	Inhibit	-
25	Enable transfer safe position via PROFIsafe	Enable	Inhibit	-

Dependency: Refer to: F01682, F01683

Note: A change only becomes effective after a POWER ON.
SDI: Safe Direction (safe motion direction)
SLS: Safely-Limited Speed / SG: Safely reduced speed
SOS: Safe Operating Stop / SBH: Safe operating stop
SSM: Safe Speed Monitor (safety-relevant feedback signal from the velocity monitoring)

p9502 SI Motion axis type (Control Unit) / SI Mtn ax type CU

VECTOR_G

Can be changed: C2(95)	**Calculated:** -	**Access level:** 3
Data type: Integer16	**Dynamic index:** -	**Func. diagram:** -
P-Group: Safety Integrated	**Units group:** -	**Unit selection:** -
Not for motor type: -	**Scaling:** -	**Expert list:** 1
Min	**Max**	**Factory setting**
0	1	0

Description: Sets the axis type (linear axis or rotary axis/spindle).

Value:
0: Linear axis
1: Rot axis/spindle

Note: For the commissioning software, after changing over the axis type, the units dependent on the axis type are only updated after a project upload.
A change only becomes effective after a POWER ON.

© Siemens AG 2012 All Rights Reserved

p9503 SI Motion SCA (SN) enable (Control Unit) / SI Mtn SCA enab

VECTOR_G

Can be changed: U, T	**Calculated:** -	**Access level:** 4
Data type: Unsigned32	**Dynamic index:** -	**Func. diagram:** -
P-Group: Safety Integrated	**Units group:** -	**Unit selection:** -
Not for motor type: -	**Scaling:** -	**Expert list:** 1
Min	**Max**	**Factory setting**
-	-	0000 0000 0000 0000 0000 0000 0000 0000 bin

Description: Setting to enable the function "Safe Cam" (SCA).

Bit field:

Bit	Signal name	1 signal	0 signal	FP
00	Enable SCA1 (SN1)	Enable	Inhibit	-
01	Enable SCA2 (SN2)	Enable	Inhibit	-
02	Enable SCA3 (SN3)	Enable	Inhibit	-
03	Enable SCA4 (SN4)	Enable	Inhibit	-
04	Enable SCA5 (SN5)	Enable	Inhibit	-
05	Enable SCA6 (SN6)	Enable	Inhibit	-
06	Enable SCA7 (SN7)	Enable	Inhibit	-
07	Enable SCA8 (SN8)	Enable	Inhibit	-
08	Enable SCA9 (SN9)	Enable	Inhibit	-
09	Enable SCA10 (SN10)	Enable	Inhibit	-
10	Enable SCA11 (SN11)	Enable	Inhibit	-
11	Enable SCA12 (SN12)	Enable	Inhibit	-
12	Enable SCA13 (SN13)	Enable	Inhibit	-
13	Enable SCA14 (SN14)	Enable	Inhibit	-
14	Enable SCA15 (SN15)	Enable	Inhibit	-
15	Enable SCA16 (SN16)	Enable	Inhibit	-
16	Enable ESCA17 (SN17)	Enable	Inhibit	-
17	Enable SCA18 (SN18)	Enable	Inhibit	-
18	Enable SCA19 (SN19)	Enable	Inhibit	-
19	Enable SCA20 (SN20)	Enable	Inhibit	-
20	Enable SCA21 (SN21)	Enable	Inhibit	-
21	Enable SCA22 (SN22)	Enable	Inhibit	-
22	Enable SCA23 (SN23)	Enable	Inhibit	-
23	Enable SCA24 (SN24)	Enable	Inhibit	-
24	Enable SCA25 (SN25)	Enable	Inhibit	-
25	Enable SCA26 (SN26)	Enable	Inhibit	-
26	Enable SCA27 (SN27)	Enable	Inhibit	-
27	Enable SCA28 (SN28)	Enable	Inhibit	-
28	Enable SCA29 (SN29)	Enable	Inhibit	-
29	Enable SCA30 (SN30)	Enable	Inhibit	-

Dependency: Refer to: p9501
Refer to: F01686

Note: The "Safe Cam" function (SCA) can either be enabled using p9501 or p9503.
SCA: Safe Cam / SN: Safe software cam

p9505 SI Motion SP modulo value (Control Unit) / SI mtn SP mod CU

VECTOR_G

Can be changed: C2(95)	**Calculated:** -	**Access level:** 3
Data type: FloatingPoint32	**Dynamic index:** -	**Func. diagram:** -
P-Group: Safety Integrated	**Units group:** -	**Unit selection:** -
Not for motor type: -	**Scaling:** -	**Expert list:** 1
Min	**Max**	**Factory setting**
0 [°]	737280 [°]	0 [°]

Description: Sets the modulo value in degrees for rotary axes of the "Safe position" function.
This modulo value is taken into account when safely referencing as well as when transferring the safe position via PROFIsafe when the absolute position is enabled.
The modulo function is deactivated for a value = 0.

© Siemens AG 2012 All Rights Reserved

Dependency: Refer to: p9501
Refer to: F01681

Notice: When the "SLP" function is activated, the modulo function must be deactivated as otherwise fault F01681 will be output.
If the absolute position is not enabled, then the parameterized modulo value is not taken into account.

Note: SLP: Safely-Limited Position
SP: Safe Position

p9506 SI Motion function specification (Control Unit) / SI Mtn fct_spc CU

VECTOR_G

Can be changed: C2(95)	**Calculated:** -	**Access level:** 3
Data type: Integer16	**Dynamic index:** -	**Func. diagram:** -
P-Group: Safety Integrated	**Units group:** -	**Unit selection:** -
Not for motor type: -	**Scaling:** -	**Expert list:** 1
Min	**Max**	**Factory setting**
0	3	0

Description: Sets the function specification for the safe motion monitoring.

Value:
0: Safety with encoder and accel_monitoring(SAM) / delay time
1: Safety without encoder with braking ramp (SBR)
3: Safety without encoder with accel_monitoring(SAM) / delay time

Dependency: Refer to: C01711

p9507 SI Motion function specification (Control Unit) / SI Mtn config CU

VECTOR_G

Can be changed: C2(95)	**Calculated:** -	**Access level:** 3
Data type: Unsigned32	**Dynamic index:** -	**Func. diagram:** -
P-Group: Safety Integrated	**Units group:** -	**Unit selection:** -
Not for motor type: -	**Scaling:** -	**Expert list:** 1
Min	**Max**	**Factory setting**
-	-	0000 bin

Description: Sets the function configuration for the safe motion monitoring functions.

Bit field:

Bit	Signal name	1 signal	0 signal	FP
00	Extended message acknowledgement	Yes	No	-
01	Setpoint velocity limit for STOP F	No	Yes	-
02	Motor type sensorless actual value sensing	Synchronous motor	Induction motor	-
03	SS1 drive-based braking response	without OFF3	with OFF3	-

Dependency: Refer to: C01711

Note: Re bit 00:
When the function is activated, a safety-relevant acknowledgement (internal event acknowledge) can be performed by selecting/deselecting STO.
Re bit 01:
When the function is activated, the active setpoint velocity limit (CO: r9733) is set to zero when STOP F is active.
Re bit 02:
This bit defines the type of motor, which the sensorless safety technology evaluates.
For bit = 0, the sensorless motion monitoring function calculates the actual velocity for an induction motor.
For bit = 1, an actual velocity is calculated for a synchronous motor. This value depends on the setting in p0300.
Bit = 0 should be set if no motor is defined (p0300 = 0).
Re bit 03:
When the function is activated, the drive-based braking response (OFF3 ramp) after SS1/internal STOP B is deactivated. Braking monitoring (SBR, SAM) is also deactivated.

© Siemens AG 2012 All Rights Reserved

p9509 SI Motion behavior during pulse suppression (Control Unit) / SI Mtn behav IL CU

VECTOR_G

Can be changed: C2(95)	**Calculated:** -	**Access level:** 3
Data type: Unsigned32	**Dynamic index:** -	**Func. diagram:** -
P-Group: Safety Integrated	**Units group:** -	**Unit selection:** -
Not for motor type: -	**Scaling:** -	**Expert list:** 1
Min	**Max**	**Factory setting**
-	-	0000 0000 1111 1111 bin

Description: Sets the behavior of safety functions and their feedback during pulse suppression in encoderless operation.

Bit field:

Bit	Signal name	1 signal	0 signal	FP
00	SSM during pulse suppression and sensor-less	Becomes inactive	Remains active	-
08	SDI during pulse suppression and sensor-less	Becomes inactive	Remains active	-

Dependency: Refer to: C01711

Notice: Re bit 00:

If the OFF1 or the OFF3 ramp-down time is too low, or there is an insufficient clearance between the SSM limit speed, and the shutdown speed, then it is possible that the "speed under limit value" signal does not change to 1, because no speed actual value below the SSM limit was able to be identified before pulse cancellation. In this case, the OFF1 or the OFF3 ramp-down time or the clearance between the SSM limit speed and shutdown speed must be increased.

Note: SDI: Safe Direction (safe motion direction)

SSM: Safe Speed Monitor (safety-relevant feedback signal from the velocity monitoring)

Re bit 00:

For bit = 1 and with the SSM safety function activated, the following applies:

- During pulse suppression, monitoring is switched off and the feedback signal has a 0 signal level.

For bit = 0 and with the SSM safety function activated, the following applies:

- Monitoring continues during pulse suppression. The feedback signal last displayed before pulse suppression is kept and the system goes into the STO state.

Re bit 08:

For bit = 1 and with the SDI safety function activated, the following applies:

- During pulse suppression, monitoring is switched off and the status signal indicates inactive.

For bit = 0 and with the SDI safety function activated, the following applies:

- Monitoring continues during pulse suppression. The status signal indicates active and the system goes into the STO state.

p9510 SI Motion clock-cycle synchronous PROFIBUS master / SI Mtn sync master

VECTOR_G

Can be changed: C2(95)	**Calculated:** -	**Access level:** 4
Data type: Integer16	**Dynamic index:** -	**Func. diagram:** -
P-Group: Safety Integrated	**Units group:** -	**Unit selection:** -
Not for motor type: -	**Scaling:** -	**Expert list:** 1
Min	**Max**	**Factory setting**
0	1	0

Description: Setting for clock cycle synchronous communication between PROFIdrive controller and Control Unit.

The parameter is only relevant, if the safety-relevant motion monitoring functions integrated in the drive have been enabled (p9601.2 =1).

If a PROFIdrive controller exchanges process data in clock cycle synchronism with the Control Unit, then p9510 must be set to 1. This also applies if the drive itself does not exchange process data in clock cycle synchronism.

Examples for clock cycle synchronous communication:

- clock-cycle synchronous control for the motion control (e.g. SIMOTION).
- clock-cycle synchronous PROFIsafe master (e.g. SIMATIC S7-400F).

Value:
0: Communication not isochronous
1: Communication isochronous

Dependency: Refer to: C01711, A01796

Notice: As of firmware version 2.6, the parameter has no effect.

© Siemens AG 2012 All Rights Reserved

p9511 SI Motion actual value sensing cycle clock (Control Unit) / SI Mtn act clk CU

VECTOR_G

Can be changed: C2(95)	**Calculated:** -	**Access level:** 3
Data type: FloatingPoint32	**Dynamic index:** -	**Func. diagram:** -
P-Group: Safety Integrated	**Units group:** -	**Unit selection:** -
Not for motor type: -	**Scaling:** -	**Expert list:** 1
Min	**Max**	**Factory setting**
0.0000 [ms]	25.0000 [ms]	0.0000 [ms]

Description:

Sets the clock cycle time of the actual value sensing for safe motion monitoring.

Setting criteria if the motion monitoring functions are executed with an encoder.

- A slower clock cycle time reduces the maximum permissible velocity - however, it ensures a lower load of the Control Unit for safe actual value sensing.

- The maximum permissible velocity which, when exceeded, can mean that errors occur during safe actual value sensing, is displayed in r9730.

- The isochronous PROFIBUS clock cycle is used as a clock cycle time for actual value sensing with a setting of 0 ms; the setting is 1 ms if isochronous operation is not being used.

Setting criteria if the motion monitoring functions are executed without an encoder:

- The actual value sensing clock cycle must be set to the same value as the current controller clock cycle (p0115).

Dependency:

Refer to: p0115

Refer to: F01652

Note:

The parameter is only active for drive-based motion monitoring functions (p9601.2 = 1).

The monitoring clock cycle from p9500 must be an integer multiple of this parameter.

In the case of motion monitoring functions with encoder, the clock cycle time for actual value sensing must be an integer multiple of the current controller clock cycle and at least 4 times slower than the current controller clock cycle. A factor of at least 8 is recommended.

The clock cycle time of the actual value sensing should not be set to more than 8 ms.

A change only becomes effective after a POWER ON.

p9512 Select SI Motion safety functions without selection (CU) / SI Mtn w/o sel CU

VECTOR_G

Can be changed: C2(95)	**Calculated:** -	**Access level:** 3
Data type: Unsigned32	**Dynamic index:** -	**Func. diagram:** -
P-Group: Safety Integrated	**Units group:** -	**Unit selection:** -
Not for motor type: -	**Scaling:** -	**Expert list:** 1
Min	**Max**	**Factory setting**
-	-	0000 0000 0001 0000 bin

Description:

Sets the safety functions without selection.

The safety functions without selection are enabled with p9601.5/p9801.5.

Using this parameter, the individual motion monitoring functions can then be selected (e.g. SLS, SDI positive, SDI negative), which should then be permanently selected.

Bit field:

Bit	Signal name	1 signal	0 signal	FP
04	SLS static (CU)	Statically active	Statically inact	-
12	SDI positive static (CU)	Statically active	Statically inact	-
13	SDI negative static (CU)	Statically active	Statically inact	-

Dependency:

Refer to: p9601, p9801

Refer to: F01682

Note:

A change becomes immediately effective after exiting the safety commissioning mode.

SDI: Safe Direction (safe motion direction).

SLS: Safely-Limited Speed

© Siemens AG 2012 All Rights Reserved

p9513 SI Motion non safety-relevant measuring steps POS1 (CU) / nsrPOS1

VECTOR_G

Can be changed: C2(95)	**Calculated:** -	**Access level:** 3
Data type: Unsigned32	**Dynamic index:** -	**Func. diagram:** -
P-Group: Safety Integrated	**Units group:** -	**Unit selection:** -
Not for motor type: -	**Scaling:** -	**Expert list:** 1
Min	**Max**	**Factory setting**
0	4294967295	22000

Description: Sets the non safety-relevant measuring steps of position value POS1.

The encoder that is used for the safe motion monitoring functions on the Control Unit must be parameterized in this parameter.

Dependency: Refer to: p0416, r0473, p9313

Refer to: F01670

Note: For safe functions that are not enabled (p9501 = 0), the following applies:

- p9513 is automatically set the same as r0416 when the system boots.

For safety functions that are enabled (p9501 > 0), the following applies:

- p9513 is checked to see that it matches p0416.

p9514 SI Motion absolute encoder linear measuring steps (CU) / Enc lin meas step

VECTOR_G

Can be changed: C2(95)	**Calculated:** -	**Access level:** 3
Data type: Unsigned32	**Dynamic index:** -	**Func. diagram:** -
P-Group: Safety Integrated	**Units group:** -	**Unit selection:** -
Not for motor type: -	**Scaling:** -	**Expert list:** 1
Min	**Max**	**Factory setting**
0 [nm]	4294967295 [nm]	100 [nm]

Description: Sets the resolution of the absolute position for a linear absolute encoder.

The encoder that is used for the safe motion monitoring functions on the Control Unit must be parameterized in this parameter.

Dependency: Refer to: p0422, r0469, p9314

Note: For safe functions that are not enabled (p9501 = 0), the following applies:

- p9514 is automatically set the same as r0422 when the system boots.

For safety functions that are enabled (p9501 > 0), the following applies:

- p9514 is checked to see that it matches r0422.

p9515 SI Motion encoder coarse position value config (Control Unit) / SI Mtn s config CU

VECTOR_G

Can be changed: C2(95)	**Calculated:** -	**Access level:** 3
Data type: Unsigned32	**Dynamic index:** -	**Func. diagram:** -
P-Group: Safety Integrated	**Units group:** -	**Unit selection:** -
Not for motor type: -	**Scaling:** -	**Expert list:** 1
Min	**Max**	**Factory setting**
-	-	0000 0000 0000 0000 0000 0000 0000 0000 bin

Description: Sets the encoder configuration for the redundant coarse position value.

The encoder that is used for the safe motion monitoring functions on the Control Unit must be parameterized in this parameter.

Bit field:

Bit	Signal name	1 signal	0 signal	FP
00	Incrementer	Yes	No	-
01	Encoder CRC least significant byte first	Yes	No	-
02	Redundant coarse position val. most significant bit left-aligned	Yes	No	-
04	Binary comparison not possible	Yes	No	-
16	DRIVE-CLiQ encoder	Yes	No	-

Dependency: Refer to: r0474, p9315

© Siemens AG 2012 All Rights Reserved

Note: For safe functions that are not enabled (p9501 = 0), the following applies:
- p9515 is automatically set the same as p0474 when the system boots.
For safety functions that are enabled (p9501 > 0), the following applies:
- p9515 is checked to see that it matches p0474.

p9516 SI Motion encoder configuration safety functions (Control Unit) / SI Mtn enc_cfg CU

VECTOR_G

Can be changed: C2(95)	**Calculated:** -	**Access level:** 3
Data type: Unsigned16	**Dynamic index:** -	**Func. diagram:** -
P-Group: Safety Integrated	**Units group:** -	**Unit selection:** -
Not for motor type: -	**Scaling:** -	**Expert list:** 1
Min	**Max**	**Factory setting**
-	-	0000 bin

Description: Sets the configuration for the motor encoder and position actual value.
The encoder that is used for the safe motion monitoring functions on the Control Unit must be parameterized in this parameter.

Bit field:

Bit	Signal name	1 signal	0 signal	FP
00	Motor encoder, rotating/linear	Linear	Rotating:	-
01	Position actual value, sign change	Yes	No	-

Dependency: Refer to: p0404, p0410
Refer to: F01671

Note: For safe functions that are not enabled (p9501 = 0), the following applies:
- p9516.0 is automatically set the same as p0404.0 when the system boots.
- p9516.1 is automatically set the same as p0410.1 when the system boots.
For safety functions that are enabled (p9501 > 0), the following applies:
- p9516.0 is checked to identify whether it coincides with p0404.0.

p9517 SI Motion linear scale grid division (Control Unit) / SI Mtn grid CU

VECTOR_G

Can be changed: C2(95)	**Calculated:** -	**Access level:** 3
Data type: FloatingPoint32	**Dynamic index:** -	**Func. diagram:** -
P-Group: Safety Integrated	**Units group:** -	**Unit selection:** -
Not for motor type: -	**Scaling:** -	**Expert list:** 1
Min	**Max**	**Factory setting**
0.00 [nm]	250000000.00 [nm]	10000.00 [nm]

Description: Sets the grid division for a linear motor encoder.
The encoder that is used for the safe motion monitoring functions on the Control Unit must be parameterized in this parameter.

Dependency: Refer to: p0407, p9516
Refer to: F01671

Note: For safety functions that have not been enabled (p9501 = 0), the following applies: When booting p9517 is automatically set the same as p0407.
For safety functions that are enabled (p9501 > 0), the following applies: p9517 is checked whether it coincides with p0407.

p9518 SI Motion encoder pulses per revolution (Control Unit) / SI Mtn puls/rev CU

VECTOR_G

Can be changed: C2(95)	**Calculated:** -	**Access level:** 3
Data type: Unsigned32	**Dynamic index:** -	**Func. diagram:** -
P-Group: Safety Integrated	**Units group:** -	**Unit selection:** -
Not for motor type: -	**Scaling:** -	**Expert list:** 1
Min	**Max**	**Factory setting**
0	16777215	2048

Description: Sets the number of encoder pulses per revolution for rotary motor encoders.
The encoder that is used for the safe motion monitoring functions on the Control Unit must be parameterized in this parameter.

© Siemens AG 2012 All Rights Reserved

Dependency: Refer to: p0408, p9516
Refer to: F01671

Note: For safety functions that have not been enabled (p9501 = 0), the following applies: When booting, p9518 is automatically set the same as p0408.
For safety functions that are enabled (p9501 > 0), the following applies: p9518 is checked whether it coincides with p0408.

p9519 SI Motion fine resolution G1_XIST1 (Control Unit) / SI Mtn G1_XIST1 CU

VECTOR_G

Can be changed: C2(95)	**Calculated:** -	**Access level:** 3
Data type: Unsigned32	**Dynamic index:** -	**Func. diagram:** -
P-Group: Safety Integrated	**Units group:** -	**Unit selection:** -
Not for motor type: -	**Scaling:** -	**Expert list:** 1
Min	**Max**	**Factory setting**
2	18	11

Description: Sets the fine resolution for G1_XIST1 in bits.
The encoder that is used for the safe motion monitoring functions on the Control Unit must be parameterized in this parameter.

Dependency: Refer to: p0418
Refer to: F01671

Note: For safety functions that have not been enabled (p9501 = 0), the following applies: When booting, p9519 is automatically set the same as p0418.
For safety functions that are enabled (p9501 > 0), the following applies: p9519 is checked whether it coincides with p0418.
G1_XIST1: Encoder 1 position actual value 1 (PROFIdrive)

p9520 SI Motion spindle pitch (Control Unit) / SI Mtn Sp_pitch CU

VECTOR_G

Can be changed: C2(95)	**Calculated:** -	**Access level:** 3
Data type: FloatingPoint32	**Dynamic index:** -	**Func. diagram:** -
P-Group: Safety Integrated	**Units group:** -	**Unit selection:** -
Not for motor type: -	**Scaling:** -	**Expert list:** 1
Min	**Max**	**Factory setting**
0.1000 [mm]	8388.0000 [mm]	10.0000 [mm]

Description: Sets the gear ratio between the encoder and load in mm/revolution for a linear axis with rotary encoder.

Notice: The fourth decimal point can be rounded-off depending on the size of the entered number (from 3 places before the decimal point).

p9521[0...7] SI Motion gearbox enc (motor)/load denominator (Control Unit) / SI Mtn gear den CU

VECTOR_G

Can be changed: C2(95)	**Calculated:** -	**Access level:** 3
Data type: Unsigned32	**Dynamic index:** -	**Func. diagram:** -
P-Group: Safety Integrated	**Units group:** -	**Unit selection:** -
Not for motor type: -	**Scaling:** -	**Expert list:** 1
Min	**Max**	**Factory setting**
1	2147000000	1

Description: Sets the denominator for the gearbox between the encoder (or motor in the case of encoderless monitoring functions) and the load.

Index:
[0] = Gearbox 1
[1] = Gearbox 2
[2] = Gearbox 3
[3] = Gearbox 4
[4] = Gearbox 5
[5] = Gearbox 6
[6] = Gearbox 7
[7] = Gearbox 8

Dependency: Refer to: p9522

Notice: It is not possible to change over the gearbox stages. Gearbox 1 (index 0) is always active.

© Siemens AG 2012 All Rights Reserved

p9522[0...7] SI Motion gearbox encoder (motor)/load numerator (Control Unit) / SI Mtn gear num CU

VECTOR_G

Can be changed: C2(95)	**Calculated:** -	**Access level:** 3
Data type: Unsigned32	**Dynamic index:** -	**Func. diagram:** -
P-Group: Safety Integrated	**Units group:** -	**Unit selection:** -
Not for motor type: -	**Scaling:** -	**Expert list:** 1
Min	**Max**	**Factory setting**
1	2147000000	1

Description: Sets the numerator for the gearbox between the encoder (or motor in the case of encoderless monitoring functions) and the load.

Index:
[0] = Gearbox 1
[1] = Gearbox 2
[2] = Gearbox 3
[3] = Gearbox 4
[4] = Gearbox 5
[5] = Gearbox 6
[6] = Gearbox 7
[7] = Gearbox 8

Dependency: Refer to: p9521

Notice: It is not possible to change over the gearbox stages. Gearbox 1 (index 0) is always active.

Note: In the case of encoderless monitoring functions, the pole pair number must be multiplied by the numerator of the gearbox ratio.

Example:

Gearbox ratio 1:4, pole pair number (r0313) = 2

--> p9521 = 1, p9522 = 8 (4 x 2)

p9523 SI Motion redundant coarse pos. value valid bits (Control Unit) / Valid bits CU

VECTOR_G

Can be changed: C2(95)	**Calculated:** -	**Access level:** 3
Data type: Unsigned16	**Dynamic index:** -	**Func. diagram:** -
P-Group: Safety Integrated	**Units group:** -	**Unit selection:** -
Not for motor type: -	**Scaling:** -	**Expert list:** 1
Min	**Max**	**Factory setting**
0	16	9

Description: Sets the number of valid bits of the redundant coarse position value.

The encoder that is used for the safe motion monitoring functions on the Control Unit must be parameterized in this parameter.

Dependency: Refer to: r0470, p9323

Note: For safe functions that are not enabled (p9501 = 0), the following applies:

- p9523 is automatically set the same as r0470 when the system boots.

For safety functions that are enabled (p9501 > 0), the following applies:

- p9523 is checked to see that it matches r0470.

p9524 SI Motion Redundant coarse pos. value fine resolution bits (CU) / SI Mtn fine bit CU

VECTOR_G

Can be changed: C2(95)	**Calculated:** -	**Access level:** 3
Data type: Integer16	**Dynamic index:** -	**Func. diagram:** -
P-Group: Safety Integrated	**Units group:** -	**Unit selection:** -
Not for motor type: -	**Scaling:** -	**Expert list:** 1
Min	**Max**	**Factory setting**
-16	16	-2

Description: Sets the number of valid bits for the fine resolution of the redundant coarse position value.

The encoder that is used for the safe motion monitoring functions on the Control Unit must be parameterized in this parameter.

Dependency: Refer to: r0471, p9324

© Siemens AG 2012 All Rights Reserved

Note: For safe functions that are not enabled (p9501 = 0), the following applies:
- p9524 is automatically set the same as r0471 when the system boots.
For safety functions that are enabled (p9501 > 0), the following applies:
- p9524 is checked to see that it matches r0471.

p9525 SI Motion Redundant coarse pos. value relevant bits (CU) / Relevant bits CU

VECTOR_G

Can be changed: C2(95)	**Calculated:** -	**Access level:** 3
Data type: Unsigned16	**Dynamic index:** -	**Func. diagram:** -
P-Group: Safety Integrated	**Units group:** -	**Unit selection:** -
Not for motor type: -	**Scaling:** -	**Expert list:** 1
Min	**Max**	**Factory setting**
0	16	16

Description: Sets the number of relevant bits for the redundant coarse position value.
The encoder that is used for the safe motion monitoring functions on the Control Unit must be parameterized in this parameter.

Dependency: Refer to: p0414, r0472, p9325

Note: For safe functions that are not enabled (p9501 = 0), the following applies:
- p9525 is automatically set the same as r0472 when the system boots.
For safety functions that are enabled (p9501 > 0), the following applies:
- p9525 is checked to see that it matches r0472.

p9526 SI Motion encoder assignment second channel / SI Mtn enc chan 2

VECTOR_G

Can be changed: C2(95)	**Calculated:** -	**Access level:** 3
Data type: Unsigned32	**Dynamic index:** -	**Func. diagram:** -
P-Group: Safety Integrated	**Units group:** -	**Unit selection:** -
Not for motor type: -	**Scaling:** -	**Expert list:** 1
Min	**Max**	**Factory setting**
1	3	1

Description: Sets the number of the encoder that the second channel (control, Motor Module) uses for safe motion monitoring functions.

Dependency: For the safe motion monitoring functions, the redundant safety position actual value sensing must be activated in the appropriate encoder data set (p0430.19 = 1).
Refer to: p0187, p0188, p0189, p0430

Note: For p9526 = 1, the encoder for the closed-loop speed control is used for the second channel of the motion monitoring functions (1-encoder system).
A change only becomes effective after a POWER ON.

p9529 SI Motion Gx_XIST1 coarse pos. safe most significant bit (CU) / Gx_XIST1 MSB CU

VECTOR_G

Can be changed: C2(95)	**Calculated:** -	**Access level:** 3
Data type: Unsigned16	**Dynamic index:** -	**Func. diagram:** -
P-Group: Safety Integrated	**Units group:** -	**Unit selection:** -
Not for motor type: -	**Scaling:** -	**Expert list:** 1
Min	**Max**	**Factory setting**
0	31	14

Description: Sets the bit number for the safe most significant bit (MSB) of the Gx_XIST1 coarse position.
The encoder that is used for the safe motion monitoring functions on the Control Unit must be parameterized in this parameter.

Dependency: Refer to: p0415, r0475, p9329

Note: For safe functions that are not enabled (p9501 = 0), the following applies:
- p9529 is automatically set the same as r0475 when the system boots.
For safety functions that are enabled (p9501 > 0), the following applies:
- p9529 is checked to see that it matches r0475.
MSB: Most Significant Bit

© Siemens AG 2012 All Rights Reserved

p9530 SI Motion standstill tolerance (Control Unit) / SI Mtn standst_tol

VECTOR_G	**Can be changed:** C2(95)	**Calculated:** -	**Access level:** 3
	Data type: FloatingPoint32	**Dynamic index:** -	**Func. diagram:** -
	P-Group: Safety Integrated	**Units group:** -	**Unit selection:** -
	Not for motor type: -	**Scaling:** -	**Expert list:** 1
	Min	**Max**	**Factory setting**
	0.000 [mm]	100.000 [mm]	1.000 [mm]

Description: Sets the tolerance for the function "Safe Operating Stop" (SOS).

Dependency: Refer to: C01707

Note: SOS: Safe Operating Stop / SBH: Safe operating stop

p9530 SI Motion standstill tolerance (Control Unit) / SI Mtn standst_tol

VECTOR_G (Safety rot)	**Can be changed:** C2(95)	**Calculated:** -	**Access level:** 3
	Data type: FloatingPoint32	**Dynamic index:** -	**Func. diagram:** -
	P-Group: Safety Integrated	**Units group:** -	**Unit selection:** -
	Not for motor type: -	**Scaling:** -	**Expert list:** 1
	Min	**Max**	**Factory setting**
	0.000 [°]	100.000 [°]	1.000 [°]

Description: Sets the tolerance for the function "Safe Operating Stop" (SOS).

Dependency: Refer to: C01707

Note: SOS: Safe Operating Stop / SBH: Safe operating stop

p9531[0...3] SI Motion SLS (SG) limit values (Control Unit) / SI Mtn SLS lim CU

VECTOR_G	**Can be changed:** C2(95)	**Calculated:** -	**Access level:** 3
	Data type: FloatingPoint32	**Dynamic index:** -	**Func. diagram:** -
	P-Group: Safety Integrated	**Units group:** -	**Unit selection:** -
	Not for motor type: -	**Scaling:** -	**Expert list:** 1
	Min	**Max**	**Factory setting**
	0.00 [mm/min]	1000000.00 [mm/min]	2000.00 [mm/min]

Description: Sets the limit values for the function "Safely-Limited Speed" (SLS).

Index:
[0] = Limit value SLS1
[1] = Limit value SLS2
[2] = Limit value SLS3
[3] = Limit value SLP4

Dependency: Refer to: p9532, p9561, p9563
Refer to: C01714

Note: SLS: Safely-Limited Speed / SG: Safely reduced speed

p9531[0...3] SI Motion SLS (SG) limit values (Control Unit) / SI Mtn SLS lim CU

VECTOR_G (Safety rot)	**Can be changed:** C2(95)	**Calculated:** -	**Access level:** 3
	Data type: FloatingPoint32	**Dynamic index:** -	**Func. diagram:** -
	P-Group: Safety Integrated	**Units group:** -	**Unit selection:** -
	Not for motor type: -	**Scaling:** -	**Expert list:** 1
	Min	**Max**	**Factory setting**
	0.00 [rpm]	1000000.00 [rpm]	2000.00 [rpm]

Description: Sets the limit values for the function "Safely-Limited Speed" (SLS).

Index:
[0] = Limit value SLS1
[1] = Limit value SLS2
[2] = Limit value SLS3
[3] = Limit value SLP4

Dependency: Refer to: p9532, p9561, p9563
Refer to: C01714

© Siemens AG 2012 All Rights Reserved

Note: SLS: Safely-Limited Speed / SG: Safely reduced speed

p9532[0...15] SI Motion SLS (SG) override factor (Control Unit) / SI Mtn SLS over CU

VECTOR_G	**Can be changed:** U, T	**Calculated:** -	**Access level:** 4
	Data type: FloatingPoint32	**Dynamic index:** -	**Func. diagram:** -
	P-Group: Safety Integrated	**Units group:** -	**Unit selection:** -
	Not for motor type: -	**Scaling:** -	**Expert list:** 1
	Min	**Max**	**Factory setting**
	0.000 [%]	100.000 [%]	100.000 [%]

Description: Sets the override factor for the limit value for SLS2 and SLS4 for the function "Safely-Limited Speed" (SLS).

Index:
[0] = SLS (SG) override factor 0
[1] = SLS (SG) override factor 1
[2] = SLS (SG) override factor 2
[3] = SLS (SG) override factor 3
[4] = SLS (SG) override factor 4
[5] = SLS (SG) override factor 5
[6] = SLS (SG) override factor 6
[7] = SLS (SG) override factor 7
[8] = SLS (SG) override factor 8
[9] = SLS (SG) override factor 9
[10] = SLS (SG) override factor 10
[11] = SLS (SG) override factor 11
[12] = SLS (SG) override factor 12
[13] = SLS (SG) override factor 13
[14] = SLS (SG) override factor 14
[15] = SLS (SG) override factor 15

Dependency: Refer to: p9501, p9531

Note: The actual override factor for SLS2 and SLS4 is selected using the safety-relevant inputs (SGE).
SLS: Safely-Limited Speed / SG: Safely reduced speed

p9533 SI Motion SLS setpoint velocity limiting (Control Unit) / SI Mtn SLS set_lim

VECTOR_G	**Can be changed:** U, T	**Calculated:** -	**Access level:** 3
	Data type: FloatingPoint32	**Dynamic index:** -	**Func. diagram:** -
	P-Group: Safety Integrated	**Units group:** -	**Unit selection:** -
	Not for motor type: -	**Scaling:** -	**Expert list:** 1
	Min	**Max**	**Factory setting**
	0.000 [%]	100.000 [%]	80.000 [%]

Description: This is an evaluation factor to define the setpoint limit from the selected actual speed limit.
The active SLS limit value is evaluated with this factor and is made available as setpoint limit in r9733.

Dependency: This parameter only has to be parameterized for the motion monitoring functions integrated in the drive (p9601.2 = 1)
r9733[0] = p9531[x] x p9533 (converted from the load side to the motor side)
r9733[1] = - p9531[x] x p9533 (converted from the load side to the motor side)
[x] = Selected SLS stage
Conversion factor from the motor side to the load side:
- motor type = rotary and axis type = linear: p9522 / (p9521 x p9520)
- otherwise: p9522 / p9521
Refer to: p9501, p9531, p9601

Note: The active actual speed limit is selected via safety-relevant inputs (SGE).
When selecting SOS or a STOP A ... D, setpoint 0 is specified in r9733.
SLS: Safely-Limited Speed

© Siemens AG 2012 All Rights Reserved

p9534[0...1] SI Motion SLP (SE) upper limit values (Control Unit) / SI Mtn SLP up lim

VECTOR_G	**Can be changed:** C2(95)	**Calculated:** -	**Access level:** 3
	Data type: FloatingPoint32	**Dynamic index:** -	**Func. diagram:** 2822
	P-Group: Safety Integrated	**Units group:** -	**Unit selection:** -
	Not for motor type: -	**Scaling:** -	**Expert list:** 1
	Min -2147000.000 [mm]	**Max** 2147000.000 [mm]	**Factory setting** 100000.000 [mm]

Description: Sets the upper limit for the function "Safely-Limited Position" (SLP).

Index: [0] = Limit value SLP1 (SE1)
[1] = Limit value SLP2 (SE2)

Dependency: Refer to: p9501, p9535, p9562
Refer to: C01715

Note: For setting this limit value, the following applies: p9534[x] > p9535[x], x = 0, 1
A change only becomes effective after a POWER ON.
SLP: Safely-Limited Position / SE: Safe software limit switches

p9534[0...1] SI Motion SLP (SE) upper limit values (Control Unit) / SI Mtn SLP up lim

VECTOR_G (Safety rot)	**Can be changed:** C2(95)	**Calculated:** -	**Access level:** 3
	Data type: FloatingPoint32	**Dynamic index:** -	**Func. diagram:** 2822
	P-Group: Safety Integrated	**Units group:** -	**Unit selection:** -
	Not for motor type: -	**Scaling:** -	**Expert list:** 1
	Min -2147000.000 [°]	**Max** 2147000.000 [°]	**Factory setting** 100000.000 [°]

Description: Sets the upper limit for the function "Safely-Limited Position" (SLP).

Index: [0] = Limit value SLP1 (SE1)
[1] = Limit value SLP2 (SE2)

Dependency: Refer to: p9501, p9535, p9562
Refer to: C01715

Note: For setting this limit value, the following applies: p9534[x] > p9535[x], x = 0, 1
A change only becomes effective after a POWER ON.
SLP: Safely-Limited Position / SE: Safe software limit switches

p9535[0...1] SI Motion SLP (SE) lower limit values (Control Unit) / SI Mtn SLP low lim

VECTOR_G	**Can be changed:** C2(95)	**Calculated:** -	**Access level:** 3
	Data type: FloatingPoint32	**Dynamic index:** -	**Func. diagram:** 2822
	P-Group: Safety Integrated	**Units group:** -	**Unit selection:** -
	Not for motor type: -	**Scaling:** -	**Expert list:** 1
	Min -2147000.000 [mm]	**Max** 2147000.000 [mm]	**Factory setting** -100000.000 [mm]

Description: Sets the lower limit for the function "Safely-Limited Position" (SLP).

Index: [0] = Limit value SLP1 (SE1)
[1] = Limit value SLP2 (SE2)

Dependency: Refer to: p9501, p9534, p9562
Refer to: C01715

Note: For setting this limit value, the following applies: p9534[x] > p9535[x], x = 0, 1
A change only becomes effective after a POWER ON.
SLP: Safely-Limited Position / SE: Safe software limit switches

© Siemens AG 2012 All Rights Reserved

p9535[0...1] SI Motion SLP (SE) lower limit values (Control Unit) / SI Mtn SLP low lim

VECTOR_G (Safety rot)	**Can be changed:** C2(95)	**Calculated:** -	**Access level:** 3
	Data type: FloatingPoint32	**Dynamic index:** -	**Func. diagram:** 2822
	P-Group: Safety Integrated	**Units group:** -	**Unit selection:** -
	Not for motor type: -	**Scaling:** -	**Expert list:** 1
	Min	**Max**	**Factory setting**
	-2147000.000 [°]	2147000.000 [°]	-100000.000 [°]

Description: Sets the lower limit for the function "Safely-Limited Position" (SLP).

Index:
[0] = Limit value SLP1 (SE1)
[1] = Limit value SLP2 (SE2)

Dependency: Refer to: p9501, p9534, p9562
Refer to: C01715

Note: For setting this limit value, the following applies: p9534[x] > p9535[x], x = 0, 1
A change only becomes effective after a POWER ON.
SLP: Safely-Limited Position / SE: Safe software limit switches

p9536[0...29] SI Motion SCA (SN) plus cam position (Control Unit) / SI Mtn SCA+

VECTOR_G	**Can be changed:** U, T	**Calculated:** -	**Access level:** 4
	Data type: FloatingPoint32	**Dynamic index:** -	**Func. diagram:** -
	P-Group: Safety Integrated	**Units group:** -	**Unit selection:** -
	Not for motor type: -	**Scaling:** -	**Expert list:** 1
	Min	**Max**	**Factory setting**
	-2147000.000 [mm]	2147000.000 [mm]	10.000 [mm]

Description: Sets the plus cam position for the function "Safe Cam" (SCA).

Index:
[0] = Cam position SCA1 (SN1)
[1] = Cam position SCA2 (SN2)
[2] = Cam position SCA3 (SN3)
[3] = Cam position SCA4 (SN4)
[4] = Cam position SCA5 (SN5)
[5] = Cam position SCA6 (SN6)
[6] = Cam position SCA7 (SN7)
[7] = Cam position SCA8 (SN8)
[8] = Cam position SCA9 (SN9)
[9] = Cam position SCA10 (SN10)
[10] = Cam position SCA11 (SN11)
[11] = Cam position SCA12 (SN12)
[12] = Cam position SCA13 (SN13)
[13] = Cam position SCA14 (SN14)
[14] = Cam position SCA15 (SN15)
[15] = Cam position SCA16 (SN16)
[16] = Cam position SCA17 (SN17)
[17] = Cam position SCA18 (SN18)
[18] = Cam position SCA19 (SN19)
[19] = Cam position SCA20 (SN20)
[20] = Cam position SCA21 (SN21)
[21] = Cam position SCA22 (SN22)
[22] = Cam position SCA23 (SN23)
[23] = Cam position SCA24 (SN24)
[24] = Cam position SCA25 (SN25)
[25] = Cam position SCA26 (SN26)
[26] = Cam position SCA27 (SN27)
[27] = Cam position SCA28 (SN28)
[28] = Cam position SCA29 (SN29)
[29] = Cam position SCA30 (SN30)

Dependency: Refer to: p9501, p9503, p9537

Note: A change only becomes effective after a POWER ON.
SCA: Safe Cam / SN: Safe software cam

© Siemens AG 2012 All Rights Reserved

p9536[0...29] SI Motion SCA (SN) plus cam position (Control Unit) / SI Mtn SCA+

VECTOR_G (Safety rot)	**Can be changed:** U, T	**Calculated:** -	**Access level:** 4
	Data type: FloatingPoint32	**Dynamic index:** -	**Func. diagram:** -
	P-Group: Safety Integrated	**Units group:** -	**Unit selection:** -
	Not for motor type: -	**Scaling:** -	**Expert list:** 1
	Min	**Max**	**Factory setting**
	-2147000.000 [°]	2147000.000 [°]	10.000 [°]

Description: Sets the plus cam position for the function "Safe Cam" (SCA).

Index:
[0] = Cam position SCA1 (SN1)
[1] = Cam position SCA2 (SN2)
[2] = Cam position SCA3 (SN3)
[3] = Cam position SCA4 (SN4)
[4] = Cam position SCA5 (SN5)
[5] = Cam position SCA6 (SN6)
[6] = Cam position SCA7 (SN7)
[7] = Cam position SCA8 (SN8)
[8] = Cam position SCA9 (SN9)
[9] = Cam position SCA10 (SN10)
[10] = Cam position SCA11 (SN11)
[11] = Cam position SCA12 (SN12)
[12] = Cam position SCA13 (SN13)
[13] = Cam position SCA14 (SN14)
[14] = Cam position SCA15 (SN15)
[15] = Cam position SCA16 (SN16)
[16] = Cam position SCA17 (SN17)
[17] = Cam position SCA18 (SN18)
[18] = Cam position SCA19 (SN19)
[19] = Cam position SCA20 (SN20)
[20] = Cam position SCA21 (SN21)
[21] = Cam position SCA22 (SN22)
[22] = Cam position SCA23 (SN23)
[23] = Cam position SCA24 (SN24)
[24] = Cam position SCA25 (SN25)
[25] = Cam position SCA26 (SN26)
[26] = Cam position SCA27 (SN27)
[27] = Cam position SCA28 (SN28)
[28] = Cam position SCA29 (SN29)
[29] = Cam position SCA30 (SN30)

Dependency: Refer to: p9501, p9503, p9537

Note: A change only becomes effective after a POWER ON.
SCA: Safe Cam / SN: Safe software cam

p9537[0...29] SI Motion SCA (SN) plus cam position (Control Unit) / SI Mtn SCA-

VECTOR_G	**Can be changed:** U, T	**Calculated:** -	**Access level:** 4
	Data type: FloatingPoint32	**Dynamic index:** -	**Func. diagram:** -
	P-Group: Safety Integrated	**Units group:** -	**Unit selection:** -
	Not for motor type: -	**Scaling:** -	**Expert list:** 1
	Min	**Max**	**Factory setting**
	-2147000.000 [mm]	2147000.000 [mm]	-10.000 [mm]

Description: Sets the minus cam position for the function "Safe Cam" (SCA).

Index:
[0] = Cam position SCA1 (SN1)
[1] = Cam position SCA2 (SN2)
[2] = Cam position SCA3 (SN3)
[3] = Cam position SCA4 (SN4)
[4] = Cam position SCA5 (SN5)
[5] = Cam position SCA6 (SN6)
[6] = Cam position SCA7 (SN7)
[7] = Cam position SCA8 (SN8)

© Siemens AG 2012 All Rights Reserved

[8] = Cam position SCA9 (SN9)
[9] = Cam position SCA10 (SN10)
[10] = Cam position SCA11 (SN11)
[11] = Cam position SCA12 (SN12)
[12] = Cam position SCA13 (SN13)
[13] = Cam position SCA14 (SN14)
[14] = Cam position SCA15 (SN15)
[15] = Cam position SCA16 (SN16)
[16] = Cam position SCA17 (SN17)
[17] = Cam position SCA18 (SN18)
[18] = Cam position SCA19 (SN19)
[19] = Cam position SCA20 (SN20)
[20] = Cam position SCA21 (SN21)
[21] = Cam position SCA22 (SN22)
[22] = Cam position SCA23 (SN23)
[23] = Cam position SCA24 (SN24)
[24] = Cam position SCA25 (SN25)
[25] = Cam position SCA26 (SN26)
[26] = Cam position SCA27 (SN27)
[27] = Cam position SCA28 (SN28)
[28] = Cam position SCA29 (SN29)
[29] = Cam position SCA30 (SN30)

Dependency: Refer to: p9501, p9503, p9536

Note: A change only becomes effective after a POWER ON.
SCA: Safe Cam / SN: Safe software cam

p9537[0...29] SI Motion SCA (SN) plus cam position (Control Unit) / SI Mtn SCA-

VECTOR_G (Safety rot)

Can be changed: U, T	**Calculated:** -	**Access level:** 4
Data type: FloatingPoint32	**Dynamic index:** -	**Func. diagram:** -
P-Group: Safety Integrated	**Units group:** -	**Unit selection:** -
Not for motor type: -	**Scaling:** -	**Expert list:** 1
Min	**Max**	**Factory setting**
-2147000.000 [°]	2147000.000 [°]	-10.000 [°]

Description: Sets the minus cam position for the function "Safe Cam" (SCA).

Index: [0] = Cam position SCA1 (SN1)
[1] = Cam position SCA2 (SN2)
[2] = Cam position SCA3 (SN3)
[3] = Cam position SCA4 (SN4)
[4] = Cam position SCA5 (SN5)
[5] = Cam position SCA6 (SN6)
[6] = Cam position SCA7 (SN7)
[7] = Cam position SCA8 (SN8)
[8] = Cam position SCA9 (SN9)
[9] = Cam position SCA10 (SN10)
[10] = Cam position SCA11 (SN11)
[11] = Cam position SCA12 (SN12)
[12] = Cam position SCA13 (SN13)
[13] = Cam position SCA14 (SN14)
[14] = Cam position SCA15 (SN15)
[15] = Cam position SCA16 (SN16)
[16] = Cam position SCA17 (SN17)
[17] = Cam position SCA18 (SN18)
[18] = Cam position SCA19 (SN19)
[19] = Cam position SCA20 (SN20)
[20] = Cam position SCA21 (SN21)
[21] = Cam position SCA22 (SN22)
[22] = Cam position SCA23 (SN23)
[23] = Cam position SCA24 (SN24)
[24] = Cam position SCA25 (SN25)
[25] = Cam position SCA26 (SN26)
[26] = Cam position SCA27 (SN27)

© Siemens AG 2012 All Rights Reserved

[27] = Cam position SCA28 (SN28)
[28] = Cam position SCA29 (SN29)
[29] = Cam position SCA30 (SN30)

Dependency: Refer to: p9501, p9503, p9536

Note: A change only becomes effective after a POWER ON.
SCA: Safe Cam / SN: Safe software cam

p9538[0...29] SI Motion SCA (SN) cam track assignment (Control Unit) / SI Mtn SCA assign.

VECTOR_G

Can be changed: U, T	**Calculated:** -	**Access level:** 4
Data type: Unsigned32	**Dynamic index:** -	**Func. diagram:** -
P-Group: Safety Integrated	**Units group:** -	**Unit selection:** -
Not for motor type: -	**Scaling:** -	**Expert list:** 1
Min	**Max**	**Factory setting**
100	414	[0] 100
		[1] 101
		[2] 102
		[3] 103
		[4] 104
		[5] 105
		[6] 106
		[7] 107
		[8] 108
		[9] 109
		[10] 110
		[11] 111
		[12] 112
		[13] 113
		[14] 114
		[15] 200
		[16] 201
		[17] 202
		[18] 203
		[19] 204
		[20] 205
		[21] 206
		[22] 207
		[23] 208
		[24] 209
		[25] 210
		[26] 211
		[27] 212
		[28] 213
		[29] 214

Description: Assigns the individual cams to the maximum of 4 cam tracks and defines the numerical value for the SGA "cam range".
p9538[0...29] = CBA dec
C = Assignment of the cam to the cam track.
Valid values are 1, 2, 3, 4.
BA = Numerical value for the SGA "cam range".
If the position lies in the range of this cam, the value BA is signaled to the safety-relevant logic via the SGA "cam range" of the cam track set using C.
Valid values are 0 ... 14. Each numerical value may only be used once for each cam track.

© Siemens AG 2012 All Rights Reserved

Examples:

p9538[0] = 207

Cam 1 (index 0) is assigned cam track 2. If the position lies within the range of this cam, a value of 7 is entered in the SGA "cam range" of the second cam track.

p9538[5] = 100

Cam 6 (index 5) is assigned cam track 1. If the position lies within the range of this cam, a value of 0 is entered in the SGA "cam range" of the first cam track.

Index:
[0] = Track assignment SCA1
[1] = Track assignment SCA2
[2] = Track assignment SCA3
[3] = Track assignment SCA4
[4] = Track assignment SCA5
[5] = Track assignment SCA6
[6] = Track assignment SCA7
[7] = Track assignment SCA8
[8] = Track assignment SCA9
[9] = Track assignment SCA10
[10] = Track assignment SCA11
[11] = Track assignment SCA12
[12] = Track assignment SCA13
[13] = Track assignment SCA14
[14] = Track assignment SCA15
[15] = Track assignment SCA16
[16] = Track assignment SCA17
[17] = Track assignment SCA18
[18] = Track assignment SCA19
[19] = Track assignment SCA20
[20] = Track assignment SCA21
[21] = Track assignment SCA22
[22] = Track assignment SCA23
[23] = Track assignment SCA24
[24] = Track assignment SCA25
[25] = Track assignment SCA26
[26] = Track assignment SCA27
[27] = Track assignment SCA28
[28] = Track assignment SCA29
[29] = Track assignment SCA30

Dependency: Refer to: p9501, p9503

Refer to: F01681

Note: A change only becomes effective after a POWER ON.

SCA: Safe Cam / SN: Safe software cam

p9540 SI Motion SCA (SN) tolerance (Control Unit) / SI Mtn SCA tol CU

VECTOR_G

Can be changed: U, T	**Calculated:** -	**Access level:** 4
Data type: FloatingPoint32	**Dynamic index:** -	**Func. diagram:** -
P-Group: Safety Integrated	**Units group:** -	**Unit selection:** -
Not for motor type: -	**Scaling:** -	**Expert list:** 1
Min	**Max**	**Factory setting**
0.0010 [mm]	10.0000 [mm]	0.1000 [mm]

Description: Sets the tolerance for the function "Safe Cam" (SCA).

Within this tolerance, both monitoring channels may signal different signal states of the same safe cam.

Note: A change only becomes effective after a POWER ON.

© Siemens AG 2012 All Rights Reserved

p9540 SI Motion SCA (SN) tolerance (Control Unit) / SI Mtn SCA tol CU

VECTOR_G (Safety rot)	**Can be changed:** U, T	**Calculated:** -	**Access level:** 4
	Data type: FloatingPoint32	**Dynamic index:** -	**Func. diagram:** -
	P-Group: Safety Integrated	**Units group:** -	**Unit selection:** -
	Not for motor type: -	**Scaling:** -	**Expert list:** 1
	Min	**Max**	**Factory setting**
	0.0010 [°]	10.0000 [°]	0.1000 [°]

Description: Sets the tolerance for the function "Safe Cam" (SCA).
Within this tolerance, both monitoring channels may signal different signal states of the same safe cam.

Note: A change only becomes effective after a POWER ON.

p9541 SI Motion encoder comparison algorithm (CU) / Enc comp algo

VECTOR_G	**Can be changed:** C2(95)	**Calculated:** -	**Access level:** 3
	Data type: Integer16	**Dynamic index:** -	**Func. diagram:** -
	P-Group: Safety Integrated	**Units group:** -	**Unit selection:** -
	Not for motor type: -	**Scaling:** -	**Expert list:** 1
	Min	**Max**	**Factory setting**
	0	255	255

Description: Sets the the comparison algorithm for the encoder position monitoring functions.
The encoder that is used for the safe motion monitoring functions on the Control Unit must be parameterized in this parameter.

Value:
0: SMx20 safety algorithm
10: DQL binary safety algorithm
11: DQL linear non-binary safety algorithm
255: Safety algorithm unknown

Dependency: Refer to: p0417, p9341

Note: For safe functions that are not enabled (p9501 = 0), the following applies:
- p9541 is automatically set the same as r0417 when the system boots.
For safety functions that are enabled (p9501 > 0), the following applies:
- p9541 is checked to see that it matches r0417.

p9542 SI Motion act val comparison tol (crosswise) (Control Unit) / SI Mtn act tol CU

VECTOR_G	**Can be changed:** C2(95)	**Calculated:** -	**Access level:** 3
	Data type: FloatingPoint32	**Dynamic index:** -	**Func. diagram:** -
	P-Group: Safety Integrated	**Units group:** -	**Unit selection:** -
	Not for motor type: -	**Scaling:** -	**Expert list:** 1
	Min	**Max**	**Factory setting**
	0.0010 [mm]	360.0000 [mm]	0.1000 [mm]

Description: Sets the tolerance for the crosswise data comparison of the actual position between the two monitoring channels.
For encoderless motion monitoring functions, the tolerance must be set to a higher value (12 degrees rotary and 1 mm linear).

Dependency: Refer to: C01711

Note: For a linear axis, the tolerance is internally limited to 10 mm.
For a "linear axis with rotating motor" and standard setting of p9520, p9521 and p9522, the standard setting of p9542 corresponds to a position tolerance of 36 ° on the motor side.

© Siemens AG 2012 All Rights Reserved

p9542 SI Motion act val comparison tol (crosswise) (Control Unit) / SI Mtn act tol CU

VECTOR_G (Safety rot)	**Can be changed:** C2(95)	**Calculated:** -	**Access level:** 3
	Data type: FloatingPoint32	**Dynamic index:** -	**Func. diagram:** -
	P-Group: Safety Integrated	**Units group:** -	**Unit selection:** -
	Not for motor type: -	**Scaling:** -	**Expert list:** 1
	Min	**Max**	**Factory setting**
	0.0010 [°]	360.0000 [°]	0.1000 [°]

Description: Sets the tolerance for the crosswise data comparison of the actual position between the two monitoring channels.

For encoderless motion monitoring functions, the tolerance must be set to a higher value (12 degrees rotary and 1 mm linear).

Dependency: Refer to: C01711

Note: For a linear axis, the tolerance is internally limited to 10 mm.

For a "linear axis with rotating motor" and standard setting of p9520, p9521 and p9522, the standard setting of p9542 corresponds to a position tolerance of 36 ° on the motor side.

p9544 SI Motion actual value comparison tolerance (referencing) (CU) / SI Mtn ref tol

VECTOR_G	**Can be changed:** C2(95)	**Calculated:** -	**Access level:** 3
	Data type: FloatingPoint32	**Dynamic index:** -	**Func. diagram:** -
	P-Group: Safety Integrated	**Units group:** -	**Unit selection:** -
	Not for motor type: -	**Scaling:** -	**Expert list:** 1
	Min	**Max**	**Factory setting**
	0.0000 [mm]	36.0000 [mm]	0.0100 [mm]

Description: Sets the tolerance to check the actual values after referencing (incremental encoder) or when powering up (absolute encoder).

Dependency: Refer to: C01711

Note: A change only becomes effective after a POWER ON.

For linear axes, the maximum value is limited to 1mm.

p9544 SI Motion actual value comparison tolerance (referencing) (CU) / SI Mtn ref tol

VECTOR_G (Safety rot)	**Can be changed:** C2(95)	**Calculated:** -	**Access level:** 3
	Data type: FloatingPoint32	**Dynamic index:** -	**Func. diagram:** -
	P-Group: Safety Integrated	**Units group:** -	**Unit selection:** -
	Not for motor type: -	**Scaling:** -	**Expert list:** 1
	Min	**Max**	**Factory setting**
	0.0000 [°]	36.0000 [°]	0.0100 [°]

Description: Sets the tolerance to check the actual values after referencing (incremental encoder) or when powering up (absolute encoder).

Dependency: Refer to: C01711

Note: A change only becomes effective after a POWER ON.

For linear axes, the maximum value is limited to 1mm.

p9545 SI Motion SSM (SGA n < nx) filter time (Control Unit) / SI Mtn SSM filt CU

VECTOR_G	**Can be changed:** C2(95)	**Calculated:** -	**Access level:** 3
	Data type: FloatingPoint32	**Dynamic index:** -	**Func. diagram:** 2860
	P-Group: Safety Integrated	**Units group:** -	**Unit selection:** -
	Not for motor type: -	**Scaling:** -	**Expert list:** 1
	Min	**Max**	**Factory setting**
	0.00 [ms]	100.00 [ms]	0.00 [ms]

Description: Sets the filter time for the SSM feedback signal to detect standstill.

Note: The filter time is effective only if the function is enabled (p9501.16 = 1).

The parameter is included in the crosswise data comparison of the two monitoring channels.

SSM: Safe Speed Monitor (safety-relevant feedback signal from the velocity monitoring)

© Siemens AG 2012 All Rights Reserved

p9546 SI Motion SSM (SGA n < nx) velocity limit (CU) / SI Mtn SSM v_limCU

VECTOR_G

Can be changed: C2(95)	**Calculated:** -	**Access level:** 3
Data type: FloatingPoint32	**Dynamic index:** -	**Func. diagram:** 2860
P-Group: Safety Integrated	**Units group:** -	**Unit selection:** -
Not for motor type: -	**Scaling:** -	**Expert list:** 1
Min	**Max**	**Factory setting**
0.00 [mm/min]	1000000.00 [mm/min]	20.00 [mm/min]

Description: Sets the velocity limit for the SSM feedback signal to detect standstill (n < nx).
When this limit value is undershot, the signal "SSM feedback signal active" (SGA n < n_x) is set.
For p9568 = 0, the value in p9546 is also applicable for the function "SAM".

Caution: The following applies for p9506 = 3:
The "SAM" function is switched out if the selected threshold value is undershot.

Note: F-DO: Failsafe Digital Output / SGA: Safety-related output
SAM: Safe Acceleration Monitor (safe acceleration monitoring)
SSM: Safe Speed Monitor (safety-relevant feedback signal from the velocity monitoring) / SGA n < nx: Safety-related output n < nx

p9546 SI Motion SSM (SGA n < nx) velocity limit (CU) / SI Mtn SSM v_limCU

VECTOR_G (Safety rot)

Can be changed: C2(95)	**Calculated:** -	**Access level:** 3
Data type: FloatingPoint32	**Dynamic index:** -	**Func. diagram:** 2860
P-Group: Safety Integrated	**Units group:** -	**Unit selection:** -
Not for motor type: -	**Scaling:** -	**Expert list:** 1
Min	**Max**	**Factory setting**
0.00 [rpm]	1000000.00 [rpm]	20.00 [rpm]

Description: Sets the velocity limit for the SSM feedback signal to detect standstill (n < nx).
When this limit value is undershot, the signal "SSM feedback signal active" (SGA n < n_x) is set.
For p9568 = 0, the value in p9546 is also applicable for the function "SAM".

Caution: The following applies for p9506 = 3:
The "SAM" function is switched out if the selected threshold value is undershot.

Note: F-DO: Failsafe Digital Output / SGA: Safety-related output
SAM: Safe Acceleration Monitor (safe acceleration monitoring)
SSM: Safe Speed Monitor (safety-relevant feedback signal from the velocity monitoring) / SGA n < nx: Safety-related output n < nx

p9547 SI Motion SSM (SGA n < nx) velocity hysteresis (CU) / SI Mtn SSM hyst CU

VECTOR_G

Can be changed: C2(95)	**Calculated:** -	**Access level:** 3
Data type: FloatingPoint32	**Dynamic index:** -	**Func. diagram:** 2860
P-Group: Safety Integrated	**Units group:** -	**Unit selection:** -
Not for motor type: -	**Scaling:** -	**Expert list:** 1
Min	**Max**	**Factory setting**
0.0010 [mm/min]	500.0000 [mm/min]	10.0000 [mm/min]

Description: Sets the velocity hysteresis for the SSM feedback signal to detect standstill (n < nx).

Dependency: Refer to: C01711

Note: The velocity hysteresis is effective only if the function is enabled (p9501.16 = 1).
The parameter is included in the crosswise data comparison of the two monitoring channels.
SSM: Safe Speed Monitor (safety-relevant feedback signal from the velocity monitoring)

© Siemens AG 2012 All Rights Reserved

p9547 SI Motion SSM (SGA n < nx) velocity hysteresis (CU) / SI Mtn SSM hyst CU

VECTOR_G (Safety rot)	**Can be changed:** C2(95)	**Calculated:** -	**Access level:** 3
	Data type: FloatingPoint32	**Dynamic index:** -	**Func. diagram:** 2860
	P-Group: Safety Integrated	**Units group:** -	**Unit selection:** -
	Not for motor type: -	**Scaling:** -	**Expert list:** 1
	Min	**Max**	**Factory setting**
	0.0010 [rpm]	500.0000 [rpm]	10.0000 [rpm]

Description: Sets the velocity hysteresis for the SSM feedback signal to detect standstill (n < nx).

Dependency: Refer to: C01711

Note: The velocity hysteresis is effective only if the function is enabled (p9501.16 = 1).
The parameter is included in the crosswise data comparison of the two monitoring channels.
SSM: Safe Speed Monitor (safety-relevant feedback signal from the velocity monitoring)

p9548 SI Motion SAM actual velocity tolerance (Control Unit) / SI Mtn SAM tol CU

VECTOR_G	**Can be changed:** C2(95)	**Calculated:** -	**Access level:** 3
	Data type: FloatingPoint32	**Dynamic index:** -	**Func. diagram:** -
	P-Group: Safety Integrated	**Units group:** -	**Unit selection:** -
	Not for motor type: -	**Scaling:** -	**Expert list:** 1
	Min	**Max**	**Factory setting**
	0.00 [mm/min]	120000.00 [mm/min]	300.00 [mm/min]

Description: Sets the velocity tolerance for the "SAM" function.

Dependency: Refer to: C01706

Note: SAM: Safe Acceleration Monitor (safe acceleration monitoring)

p9548 SI Motion SAM actual velocity tolerance (Control Unit) / SI Mtn SAM tol CU

VECTOR_G (Safety rot)	**Can be changed:** C2(95)	**Calculated:** -	**Access level:** 3
	Data type: FloatingPoint32	**Dynamic index:** -	**Func. diagram:** -
	P-Group: Safety Integrated	**Units group:** -	**Unit selection:** -
	Not for motor type: -	**Scaling:** -	**Expert list:** 1
	Min	**Max**	**Factory setting**
	0.00 [rpm]	120000.00 [rpm]	300.00 [rpm]

Description: Sets the velocity tolerance for the "SAM" function.

Dependency: Refer to: C01706

Note: SAM: Safe Acceleration Monitor (safe acceleration monitoring)

p9549 SI Motion slip velocity tolerance (Control Unit) / SI Mtn slip tol

VECTOR_G	**Can be changed:** C2(95)	**Calculated:** -	**Access level:** 3
	Data type: FloatingPoint32	**Dynamic index:** -	**Func. diagram:** -
	P-Group: Safety Integrated	**Units group:** -	**Unit selection:** -
	Not for motor type: -	**Scaling:** -	**Expert list:** 1
	Min	**Max**	**Factory setting**
	0.00 [mm/min]	6000.00 [mm/min]	6.00 [mm/min]

Description: Sets the velocity tolerance that is used for a 2-encoder system in crosswise comparison between the two monitoring channels.

Dependency: Refer to: p9501, p9542

Note: If the "actual value synchronization" is not enabled (p9501.3 = 0), then the value parameterized in p9542 is used as tolerance in the crosswise data comparison.

© Siemens AG 2012 All Rights Reserved

p9549 SI Motion slip velocity tolerance (Control Unit) / SI Mtn slip tol

VECTOR_G (Safety rot)	**Can be changed:** C2(95)	**Calculated:** -	**Access level:** 3
	Data type: FloatingPoint32	**Dynamic index:** -	**Func. diagram:** -
	P-Group: Safety Integrated	**Units group:** -	**Unit selection:** -
	Not for motor type: -	**Scaling:** -	**Expert list:** 1
	Min	**Max**	**Factory setting**
	0.00 [rpm]	6000.00 [rpm]	6.00 [rpm]

Description: Sets the velocity tolerance that is used for a 2-encoder system in crosswise comparison between the two monitoring channels.

Dependency: Refer to: p9501, p9542

Note: If the "actual value synchronization" is not enabled (p9501.3 = 0), then the value parameterized in p9542 is used as tolerance in the crosswise data comparison.

p9550 SI Motion SGE changeover tolerance time (Control Unit) / SI Mtn SGE_chg tol

VECTOR_G	**Can be changed:** U, T	**Calculated:** -	**Access level:** 4
	Data type: FloatingPoint32	**Dynamic index:** -	**Func. diagram:** -
	P-Group: Safety Integrated	**Units group:** -	**Unit selection:** -
	Not for motor type: -	**Scaling:** -	**Expert list:** 1
	Min	**Max**	**Factory setting**
	0.00 [ms]	10000.00 [ms]	500.00 [ms]

Description: Sets the tolerance time for the changeover of the safety-related inputs (SGE).

p9551 SI Motion SLS (SG) changeover delay time (Control Unit) / SI Mtn SLS t CU

VECTOR_G	**Can be changed:** C2(95)	**Calculated:** -	**Access level:** 3
	Data type: FloatingPoint32	**Dynamic index:** -	**Func. diagram:** 2825
	P-Group: Safety Integrated	**Units group:** -	**Unit selection:** -
	Not for motor type: -	**Scaling:** -	**Expert list:** 1
	Min	**Max**	**Factory setting**
	0.00 [ms]	600000.00 [ms]	100.00 [ms]

Description: Sets the delay time for the SLS changeover or for the changeover from SLS to SOS for the function "Safely-Limited Speed" (SLS).

When transitioning from a higher to a lower safely-limited velocity/speed stage or to the safe operating stop (SOS), within this delay time, the "old" velocity stage remains active.

Even if SLS or SOS is activated from non safety-related operation, then this delay is still applied.

Note: SLS: Safely-Limited Speed / SG: Safely reduced speed

SOS: Safe Operating Stop / SBH: Safe operating stop

p9552 SI Motion transition time STOP C to SOS (SBH) (Control Unit) / SI Mtn t C->SOS CU

VECTOR_G	**Can be changed:** C2(95)	**Calculated:** -	**Access level:** 3
	Data type: FloatingPoint32	**Dynamic index:** -	**Func. diagram:** 2825
	P-Group: Safety Integrated	**Units group:** -	**Unit selection:** -
	Not for motor type: -	**Scaling:** -	**Expert list:** 1
	Min	**Max**	**Factory setting**
	0.00 [ms]	600000.00 [ms]	100.00 [ms]

Description: Sets the transition time from STOP C to "Safe Operating Stop" (SOS).

Note: SOS: Safe Operating Stop / SBH: Safe operating stop

© Siemens AG 2012 All Rights Reserved

p9553 SI Motion transition time STOP D to SOS (SBH) (Control Unit) / SI Mtn t D->SOS CU

VECTOR_G

Can be changed: C2(95)	**Calculated:** -	**Access level:** 3
Data type: FloatingPoint32	**Dynamic index:** -	**Func. diagram:** 2825
P-Group: Safety Integrated	**Units group:** -	**Unit selection:** -
Not for motor type: -	**Scaling:** -	**Expert list:** 1
Min	**Max**	**Factory setting**
0.00 [ms]	600000.00 [ms]	100.00 [ms]

Description: Sets the transition time from STOP D to "Safe Operating Stop" (SOS).

Note: SOS: Safe Operating Stop / SBH: Safe operating stop

p9554 SI Motion transition time STOP E to SOS (SBH) (Control Unit) / SI Mtn t E->SOS CU

VECTOR_G

Can be changed: C2(95)	**Calculated:** -	**Access level:** 3
Data type: FloatingPoint32	**Dynamic index:** -	**Func. diagram:** -
P-Group: Safety Integrated	**Units group:** -	**Unit selection:** -
Not for motor type: -	**Scaling:** -	**Expert list:** 1
Min	**Max**	**Factory setting**
0.00 [ms]	600000.00 [ms]	100.00 [ms]

Description: Sets the transition time from STOP E to "Safe Operating Stop" (SOS).

Dependency: Refer to: p9354

Note: SOS: Safe Operating Stop / SBH: Safe operating stop

p9555 SI Motion transition time STOP F to STOP B (Control Unit) / SI Mtn t F->B CU

VECTOR_G

Can be changed: C2(95)	**Calculated:** -	**Access level:** 3
Data type: FloatingPoint32	**Dynamic index:** -	**Func. diagram:** 2825
P-Group: Safety Integrated	**Units group:** -	**Unit selection:** -
Not for motor type: -	**Scaling:** -	**Expert list:** 1
Min	**Max**	**Factory setting**
0.00 [ms]	600000.00 [ms]	0.00 [ms]

Description: Sets the transition time from STOP F to STOP B.

Dependency: Refer to: C01711

p9556 SI Motion pulse suppression delay time (Control Unit) / SI Mtn IL t_del CU

VECTOR_G

Can be changed: C2(95)	**Calculated:** -	**Access level:** 3
Data type: FloatingPoint32	**Dynamic index:** -	**Func. diagram:** 2825
P-Group: Safety Integrated	**Units group:** -	**Unit selection:** -
Not for motor type: -	**Scaling:** -	**Expert list:** 1
Min	**Max**	**Factory setting**
0.00 [ms]	3600000.00 [ms]	100.00 [ms]

Description: Sets the delay time for the safe pulse suppression after STOP B.

In the case of encoderless motion monitoring functions with safe brake ramp monitoring (p9506 = 1) and the OFF3 ramp enabled at the same time (p9507.3 = 0), the parameter has no effect.

Dependency: Refer to: p9560

Refer to: C01701

© Siemens AG 2012 All Rights Reserved

p9557 SI Motion pulse suppression test time (Control Unit) / SI Mtn IL t_test

VECTOR_G	**Can be changed:** C2(95)	**Calculated:** -	**Access level:** 3
	Data type: FloatingPoint32	**Dynamic index:** -	**Func. diagram:** -
	P-Group: Safety Integrated	**Units group:** -	**Unit selection:** -
	Not for motor type: -	**Scaling:** -	**Expert list:** 1
	Min	**Max**	**Factory setting**
	0.00 [ms]	10000.00 [ms]	100.00 [ms]

Description: Sets the time after which the pulses must have been suppressed when initiating the test stop.

Dependency: Refer to: C01798

Note: A change only becomes effective after a POWER ON.

p9558 SI Motion acceptance test mode time limit (Control Unit) / SI Mtn acc t CU

VECTOR_G	**Can be changed:** C2(95)	**Calculated:** -	**Access level:** 3
	Data type: FloatingPoint32	**Dynamic index:** -	**Func. diagram:** -
	P-Group: Safety Integrated	**Units group:** -	**Unit selection:** -
	Not for motor type: -	**Scaling:** -	**Expert list:** 1
	Min	**Max**	**Factory setting**
	5000.00 [ms]	100000.00 [ms]	40000.00 [ms]

Description: Sets the maximum time for the acceptance test mode.

If the acceptance test mode takes longer than the selected time limit, then the mode is automatically terminated.

Dependency: Refer to: C01799

p9559 SI Motion forced checking procedure timer (Control Unit) / SI Mtn dyn timer

VECTOR_G	**Can be changed:** C2(95)	**Calculated:** -	**Access level:** 3
	Data type: FloatingPoint32	**Dynamic index:** -	**Func. diagram:** -
	P-Group: Safety Integrated	**Units group:** -	**Unit selection:** -
	Not for motor type: -	**Scaling:** -	**Expert list:** 1
	Min	**Max**	**Factory setting**
	0.00 [h]	9000.00 [h]	8.00 [h]

Description: Sets the time interval for carrying out the forced checking procedure and testing the safety motion monitoring functions integrated in the drives.

Within the parameterized time, the safety functions must have been tested at least once (including de-selection of the "STO" function).

This monitoring time is reset each time the test is carried out.

The signal source to initiate the forced checking procedure is set in p9705.

Dependency: Refer to: p9705

Refer to: A01697, C01798

Note: STO: Safe Torque Off

p9560 SI Motion pulse suppression shutdown velocity (Control Unit) / SI Mtn IL v_shutCU

VECTOR_G	**Can be changed:** C2(95)	**Calculated:** -	**Access level:** 3
	Data type: FloatingPoint32	**Dynamic index:** -	**Func. diagram:** -
	P-Group: Safety Integrated	**Units group:** -	**Unit selection:** -
	Not for motor type: -	**Scaling:** -	**Expert list:** 1
	Min	**Max**	**Factory setting**
	0.00 [mm/min]	6000.00 [mm/min]	0.00 [mm/min]

Description: Sets the shutdown velocity for pulse suppression.

Below this velocity "standstill" is assumed and for STOP B / SS1, the pulses are suppressed (by changing to STOP A).

In the case of encoderless motion monitoring functions, the parameter must be > 0 (recommended value: 10).

Dependency: Refer to: p9556

© Siemens AG 2012 All Rights Reserved

p9560 SI Motion pulse suppression shutdown speed (Control Unit) / SI Mtn IL n_shutCU

VECTOR_G (Safety rot)	**Can be changed:** C2(95)	**Calculated:** -	**Access level:** 3
	Data type: FloatingPoint32	**Dynamic index:** -	**Func. diagram:** -
	P-Group: Safety Integrated	**Units group:** -	**Unit selection:** -
	Not for motor type: -	**Scaling:** -	**Expert list:** 1
	Min	**Max**	**Factory setting**
	0.00 [rpm]	6000.00 [rpm]	0.00 [rpm]

Description: Sets the shutdown speed for the pulse suppression.
Below this speed "standstill" is assumed and for STOP B, the pulses are suppressed by changing to STOP A).

Dependency: Refer to: p9556

p9561 SI Motion SLS (SG) stop response (Control Unit) / SI Mtn SLS resp

VECTOR_G	**Can be changed:** U, T	**Calculated:** -	**Access level:** 4
	Data type: Integer16	**Dynamic index:** -	**Func. diagram:** -
	P-Group: Safety Integrated	**Units group:** -	**Unit selection:** -
	Not for motor type: -	**Scaling:** -	**Expert list:** 1
	Min	**Max**	**Factory setting**
	0	14	5

Description: Sets the stop response for the function "Safely-Limited Speed" (SLS).
This setting applies for all SLS limit values.
An input value of less than 5 signifies personnel protection, from 10 and upwards, machine protection.
This parameter can only be used for SINUMERIK Safety Integrated.
For motion monitoring functions integrated in the drive, only a value of 5 is permissible. Other settings result in the safety message C01711/C30711 with message value 44.

Value:
0: STOP A
1: STOP B
2: STOP C
3: STOP D
4: STOP E
5: Sets the stop response via p9563 (SLS-specific)
10: STOP A with delayed pulse suppression when the bus fails
11: STOP B with delayed pulse suppression when the bus fails
12: STOP C with delayed pulse suppression when the bus fails
13: STOP D with delayed pulse suppression when the bus fails
14: STOP E with delayed pulse suppression when the bus fails

Dependency: Refer to: p9531, p9563, p9580

Note: SLS: Safely-Limited Speed / SG: Safely reduced speed

p9562[0...1] SI Motion SLP (SE) stop response (Control Unit) / SI Mtn SLP Stop CU

VECTOR_G	**Can be changed:** C2(95)	**Calculated:** -	**Access level:** 3
	Data type: Integer16	**Dynamic index:** -	**Func. diagram:** -
	P-Group: Safety Integrated	**Units group:** -	**Unit selection:** -
	Not for motor type: -	**Scaling:** -	**Expert list:** 1
	Min	**Max**	**Factory setting**
	0	14	2

Description: Sets the stop response for the function "Safely-Limited Position" (SLP).

Value:
0: STOP A
1: STOP B
2: STOP C
3: STOP D
4: STOP E
10: STOP A with delayed pulse suppression when the bus fails
11: STOP B with delayed pulse suppression when the bus fails
12: STOP C with delayed pulse suppression when the bus fails

© Siemens AG 2012 All Rights Reserved

13: STOP D with delayed pulse suppression when the bus fails
14: STOP E with delayed pulse suppression when the bus fails

Index: [0] = Limit value SLP1 (SE1)
[1] = Limit value SLP2 (SE2)

Dependency: Refer to: p9534, p9535

Note: SLP: Safely-Limited Position / SE: Safe software limit switches

p9563[0...3] SI Motion SLS (SG)-specific stop response (Control Unit) / SI Mtn SLS stop CU

VECTOR_G

Can be changed: C2(95)	**Calculated:** -	**Access level:** 3
Data type: Integer16	**Dynamic index:** -	**Func. diagram:** -
P-Group: Safety Integrated	**Units group:** -	**Unit selection:** -
Not for motor type: -	**Scaling:** -	**Expert list:** 1
Min	**Max**	**Factory setting**
0	14	2

Description: Sets the SLS-specific stop response for the function "Safely-Limited Speed" (SLS).
These settings apply to the individual limit values for SLS.
An input value of less than 5 signifies personnel protection, from 10 and upwards, machine protection.
In the case of encoderless motion monitoring (p9506/p9306 = 1, 3), only a value of 0 or 1 is permitted.

Value:
0: STOP A
1: STOP B
2: STOP C
3: STOP D
4: STOP E
10: STOP A with delayed pulse suppression when the bus fails
11: STOP B with delayed pulse suppression when the bus fails
12: STOP C with delayed pulse suppression when the bus fails
13: STOP D with delayed pulse suppression when the bus fails
14: STOP E with delayed pulse suppression when the bus fails

Index: [0] = Limit value SLS1
[1] = Limit value SLS2
[2] = Limit value SLS3
[3] = Limit value SLP4

Dependency: Refer to: p9531, p9561, p9580

Note: In the extended sense, a bus failure should be seen here as a communication error in the control signals of the safety functions (e.g. via PROFIsafe or TM54F).
SLS: Safely-Limited Speed / SG: Safely reduced speed

p9564 SI Motion SDI tolerance (Control Unit) / SI Mtn SDI tol CU

VECTOR_G

Can be changed: C2(95)	**Calculated:** -	**Access level:** 3
Data type: FloatingPoint32	**Dynamic index:** -	**Func. diagram:** 2861
P-Group: Safety Integrated	**Units group:** -	**Unit selection:** -
Not for motor type: -	**Scaling:** -	**Expert list:** 1
Min	**Max**	**Factory setting**
0.001 [mm]	360.000 [mm]	12.000 [mm]

Description: Sets the tolerance for the function "Safe motion direction" (SDI).
This motion in the monitored direction is still permissible before safety message C01716 is initiated.

Dependency: Refer to: p9565, p9566
Refer to: C01716

Note: SDI: Safe Direction (safe motion direction)

© Siemens AG 2012 All Rights Reserved

p9564 SI Motion SDI tolerance (Control Unit) / SI Mtn SDI tol CU

VECTOR_G (Safety rot)	**Can be changed:** C2(95)	**Calculated:** -	**Access level:** 3
	Data type: FloatingPoint32	**Dynamic index:** -	**Func. diagram:** 2861
	P-Group: Safety Integrated	**Units group:** -	**Unit selection:** -
	Not for motor type: -	**Scaling:** -	**Expert list:** 1
	Min	**Max**	**Factory setting**
	0.001 [°]	360.000 [°]	12.000 [°]

Description: Sets the tolerance for the function "Safe motion direction" (SDI).
This motion in the monitored direction is still permissible before safety message C01716 is initiated.

Dependency: Refer to: p9565, p9566
Refer to: C01716

Note: SDI: Safe Direction (safe motion direction)

p9565 SI Motion SDI delay time (Control Unit) / SI Mtn SDI t CU

VECTOR_G	**Can be changed:** C2(95)	**Calculated:** -	**Access level:** 3
	Data type: FloatingPoint32	**Dynamic index:** -	**Func. diagram:** 2861
	P-Group: Safety Integrated	**Units group:** -	**Unit selection:** -
	Not for motor type: -	**Scaling:** -	**Expert list:** 1
	Min	**Max**	**Factory setting**
	0.00 [ms]	600000.00 [ms]	100.00 [ms]

Description: Sets the delay time for the function "Safe motion direction" (SDI). When selecting the SDI function, motion in the monitored direction is permissible as a maximum for this time; this means that this time can be used for braking existing motion.

Dependency: Refer to: p9564, p9566
Refer to: C01716

Note: SDI: Safe Direction (safe motion direction)

p9566 SI Motion SDI stop response (Control Unit) / SI Mtn SDI Stop CU

VECTOR_G	**Can be changed:** C2(95)	**Calculated:** -	**Access level:** 3
	Data type: Integer16	**Dynamic index:** -	**Func. diagram:** 2861
	P-Group: Safety Integrated	**Units group:** -	**Unit selection:** -
	Not for motor type: -	**Scaling:** -	**Expert list:** 1
	Min	**Max**	**Factory setting**
	0	14	1

Description: Sets the stop response for the function "Safe motion direction" (SDI).
This setting applies to both directions of motion.

Value:
0: STOP A
1: STOP B
2: STOP C
3: STOP D
4: STOP E
10: STOP A with delayed pulse suppression when the bus fails
11: STOP B with delayed pulse suppression when the bus fails
12: STOP C with delayed pulse suppression when the bus fails
13: STOP D with delayed pulse suppression when the bus fails
14: STOP E with delayed pulse suppression when the bus fails

Dependency: Refer to: p9564, p9565
Refer to: C01716

Notice: In the case of encoderless motion monitoring (p9506 = 1), only a value of 0 or 1 is permitted.

Note: In the extended sense, a bus failure should be seen here as a communication error in the control signals of the safety functions (e.g. via PROFIsafe or TM54F).
SDI: Safe Direction (safe motion direction)

© Siemens AG 2012 All Rights Reserved

p9568 SI Motion SAM velocity limit (Control Unit) / SI Mtn SAM v_limCU

VECTOR_G

Can be changed: C2(95)	**Calculated:** -	**Access level:** 3
Data type: FloatingPoint32	**Dynamic index:** -	**Func. diagram:** -
P-Group: Safety Integrated	**Units group:** -	**Unit selection:** -
Not for motor type: -	**Scaling:** -	**Expert list:** 1
Min	**Max**	**Factory setting**
0.00 [mm/min]	1000.00 [mm/min]	0.00 [mm/min]

Description: Sets the velocity tolerance limit for the "SAM" function.
SAM is de-activated once the set velocity limit has been undershot.

Note: SAM: Safe Acceleration Monitor (safe acceleration monitoring)
SSM: Safe Speed Monitor (safety-relevant feedback signal from the velocity monitoring)
For p9568 = p9368 = 0, the following applies:
The value in p9546/p9346 (SSM) is applied as the velocity limit for SAM.

p9568 SI Motion SAM velocity limit (Control Unit) / SI Mtn SAM v_limCU

VECTOR_G (Safety rot)

Can be changed: C2(95)	**Calculated:** -	**Access level:** 3
Data type: FloatingPoint32	**Dynamic index:** -	**Func. diagram:** -
P-Group: Safety Integrated	**Units group:** -	**Unit selection:** -
Not for motor type: -	**Scaling:** -	**Expert list:** 1
Min	**Max**	**Factory setting**
0.00 [rpm]	1000.00 [rpm]	0.00 [rpm]

Description: Sets the velocity tolerance limit for the "SAM" function.
SAM is de-activated once the set velocity limit has been undershot.

Note: SAM: Safe Acceleration Monitor (safe acceleration monitoring)
SSM: Safe Speed Monitor (safety-relevant feedback signal from the velocity monitoring)
For p9568 = p9368 = 0, the following applies:
The value in p9546/p9346 (SSM) is applied as the velocity limit for SAM.

p9570 SI Motion acceptance test mode (Control Unit) / SI Mtn Acc_mode

VECTOR_G

Can be changed: U, T	**Calculated:** -	**Access level:** 3
Data type: Integer16	**Dynamic index:** -	**Func. diagram:** -
P-Group: Safety Integrated	**Units group:** -	**Unit selection:** -
Not for motor type: -	**Scaling:** -	**Expert list:** 1
Min	**Max**	**Factory setting**
0000 hex	00AC hex	0000 hex

Description: Setting to select and de-select the acceptance test mode.

Value:
0: [00 hex] De-select the acceptance test mode
172: [AC hex] Select the acceptance test mode

Dependency: Refer to: p9558, r9571, p9601
Refer to: C01799

Note: Acceptance test mode can only be selected if the safe motion monitoring functions are enabled.

r9571 SI Motion acceptance test status (Control Unit) / SI Mtn acc_status

VECTOR_G

Can be changed: -	**Calculated:** -	**Access level:** 3
Data type: Integer16	**Dynamic index:** -	**Func. diagram:** -
P-Group: Safety Integrated	**Units group:** -	**Unit selection:** -
Not for motor type: -	**Scaling:** -	**Expert list:** 1
Min	**Max**	**Factory setting**
0000 hex	00AC hex	-

Description: Displays the status of the acceptance test mode.

Value:
0: [00 hex] Acc_mode inactive
12: [0C hex] Acc_mode not possible due to POWER ON fault

© Siemens AG 2012 All Rights Reserved

13: [0D hex] Acc_mode not possible due to incorrect ID in p9570
15: [0F hex] Acc_mode not possible due to expired Acc_timer
172: [AC hex] Acc_mode active

Dependency: Refer to: p9558, p9570
Refer to: C01799

p9572 SI Motion reference position (Control Unit) / SI mtn rel_pos

VECTOR_G

Can be changed: U, T	**Calculated:** -	**Access level:** 3
Data type: FloatingPoint32	**Dynamic index:** -	**Func. diagram:** -
P-Group: Safety Integrated	**Units group:** -	**Unit selection:** -
Not for motor type: -	**Scaling:** -	**Expert list:** 1
Min	**Max**	**Factory setting**
-737280.000 [mm]	737280.000 [mm]	0.000 [mm]

Description: The reference position entered in this parameter, is used as safe absolute position when setting p9573.
If errors are identified when performing the plausibility checks, then message C01711 is output with message value 1003

Note: The unit depends on the selected axis type, linear or rotary axis, in p9502

p9572 SI Motion reference position (Control Unit) / SI mtn rel_pos

VECTOR_G (Safety rot)

Can be changed: U, T	**Calculated:** -	**Access level:** 3
Data type: FloatingPoint32	**Dynamic index:** -	**Func. diagram:** -
P-Group: Safety Integrated	**Units group:** -	**Unit selection:** -
Not for motor type: -	**Scaling:** -	**Expert list:** 1
Min	**Max**	**Factory setting**
-737280.000 [°]	737280.000 [°]	0.000 [°]

Description: The reference position entered in this parameter, is used as safe absolute position when setting p9573.
If errors are identified when performing the plausibility checks, then message C01711 is output with message value 1003

Note: The unit depends on the selected axis type, linear or rotary axis, in p9502

p9573 SI Motion accept reference position (Control Unit) / SI mtn set_ref_pos

VECTOR_G

Can be changed: U, T	**Calculated:** -	**Access level:** 3
Data type: Integer16	**Dynamic index:** -	**Func. diagram:** -
P-Group: Safety Integrated	**Units group:** -	**Unit selection:** -
Not for motor type: -	**Scaling:** -	**Expert list:** 1
Min	**Max**	**Factory setting**
0	122	0

Description: The safe absolute position is rejected or newly set using this parameter.
If errors are identified when performing the plausibility checks, then message C1711 is output with message value 1003

Value:
0: No action
89: Set reference position at standstill
122: Declare reference position invalid

Dependency: Refer to: p9572

p9574 SI Motion safe position scaling (Control Unit) / SI mtn SP scal CU

VECTOR_G

Can be changed: C2(95)	**Calculated:** -	**Access level:** 3
Data type: Integer32	**Dynamic index:** -	**Func. diagram:** -
P-Group: Safety Integrated	**Units group:** -	**Unit selection:** -
Not for motor type: -	**Scaling:** -	**Expert list:** 1
Min	**Max**	**Factory setting**
1	100000	1000

Description: Sets the scaling factor to transfer the safe position via PROFIsafe in the 16-bit notation.

Dependency: Refer to: r9713

© Siemens AG 2012 All Rights Reserved

Note: The parameter is only effective when PROFIsafe telegram 901 is selected.
By selecting a suitable scaling of the 32 bit position actual value (r9713[0]), it must be ensured that the scaled position actual value is not greater than 16 bit. The scaling is realized by dividing r9713[0] with this scaling factor.
If, during operation, a position actual value is determined, which cannot be scaled to the 16 bits, then message C0711 with value 7001 is output and safety stop response STOP F.

p9580 SI Motion pulse suppression delay bus failure (Control Unit) / SI Mtn t to IL CU

VECTOR_G	**Can be changed:** C2(95)	**Calculated:** -	**Access level:** 3
	Data type: FloatingPoint32	**Dynamic index:** -	**Func. diagram:** -
	P-Group: Safety Integrated	**Units group:** -	**Unit selection:** -
	Not for motor type: -	**Scaling:** -	**Expert list:** 1
	Min	**Max**	**Factory setting**
	0.00 [ms]	800.00 [ms]	0.00 [ms]

Description: Sets the delay time after which the pulses are safely suppressed after a bus failure.
Dependency: Refer to: p9561, p9563
Note: In the extended sense, a bus failure should be seen here as a communication error in the control signals of the safety functions (e.g. via PROFIsafe or TM54F).
The main use of the wait time is the ESR function (Extended Stop and Retract).

p9581 SI Motion brake ramp reference value (Control Unit) / SI Mtn ramp ref CU

VECTOR_G	**Can be changed:** C2(95)	**Calculated:** -	**Access level:** 3
	Data type: FloatingPoint32	**Dynamic index:** -	**Func. diagram:** -
	P-Group: Safety Integrated	**Units group:** -	**Unit selection:** -
	Not for motor type: -	**Scaling:** -	**Expert list:** 1
	Min	**Max**	**Factory setting**
	600.0000 [mm/min]	240000.0000 [mm/min]	1500.0000 [mm/min]

Description: Sets the reference value to define the brake ramp.
The rate of rise of the brake ramp depends upon p9581 (reference value) and p9583 (monitoring time).
Dependency: Refer to: p9582, p9583

p9581 SI Motion brake ramp reference value (Control Unit) / SI Mtn ramp ref CU

VECTOR_G (Safety rot)	**Can be changed:** C2(95)	**Calculated:** -	**Access level:** 3
	Data type: FloatingPoint32	**Dynamic index:** -	**Func. diagram:** -
	P-Group: Safety Integrated	**Units group:** -	**Unit selection:** -
	Not for motor type: -	**Scaling:** -	**Expert list:** 1
	Min	**Max**	**Factory setting**
	600.0000 [rpm]	240000.0000 [rpm]	1500.0000 [rpm]

Description: Sets the reference value to define the brake ramp.
The rate of rise of the brake ramp depends upon p9581 (reference value) and p9583 (monitoring time).
Dependency: Refer to: p9582, p9583

p9582 SI Motion brake ramp delay time (Control Unit) / SI Mtn rp t_del CU

VECTOR_G	**Can be changed:** C2(95)	**Calculated:** -	**Access level:** 3
	Data type: FloatingPoint32	**Dynamic index:** -	**Func. diagram:** -
	P-Group: Safety Integrated	**Units group:** -	**Unit selection:** -
	Not for motor type: -	**Scaling:** -	**Expert list:** 1
	Min	**Max**	**Factory setting**
	10.00 [ms]	99000.00 [ms]	250.00 [ms]

Description: Sets the delay time for monitoring the brake ramp.
Monitoring of the brake ramp starts once the delay time has elapsed.
Dependency: Refer to: p9581, p9583

© Siemens AG 2012 All Rights Reserved

p9583 SI Motion brake ramp monitoring time (Control Unit) / SI Mtn rp t_mon CU

VECTOR_G	**Can be changed:** C2(95)	**Calculated:** -	**Access level:** 3
	Data type: FloatingPoint32	**Dynamic index:** -	**Func. diagram:** -
	P-Group: Safety Integrated	**Units group:** -	**Unit selection:** -
	Not for motor type: -	**Scaling:** -	**Expert list:** 1
	Min	**Max**	**Factory setting**
	0.50 [s]	3600.00 [s]	10.00 [s]

Description: Sets the monitoring time to define the brake ramp.
The rate of rise of the brake ramp depends upon p9581 (reference value) and p9583 (monitoring time).

Dependency: Refer to: p9581, p9582

p9585 SI Motion fault tolerance actual value sensing sensorless (CU) / SI mtn SI to SL CU

VECTOR_G	**Can be changed:** C2(95)	**Calculated:** -	**Access level:** 3
	Data type: Integer32	**Dynamic index:** -	**Func. diagram:** -
	P-Group: Safety Integrated	**Units group:** -	**Unit selection:** -
	Not for motor type: -	**Scaling:** -	**Expert list:** 1
	Min	**Max**	**Factory setting**
	-1	4	-1

Description: Sets the tolerance of the plausibility monitoring of the current and voltage angle
p9585 = 4 must be parameterized for synchronous motors.

Dependency: Refer to: r9787
Refer to: F01681, C01711

Notice: Reducing this value can adversely affect the actual value sensing and the plausibility check.
When the value is increased, this results in a longer evaluation delay.

Note: This parameter is only effective for encoderless actual value sensing (p9506/p9306 = 1, 3).
For a value of -1, for synchronous motors, the value 4 is used automatically for the calculation – and for induction motors, the value 0.

p9586 SI Motion delay time of the evaluation sensorless (CU) / SI Mtn t_del SL CU

VECTOR_G	**Can be changed:** C2(95)	**Calculated:** -	**Access level:** 3
	Data type: FloatingPoint32	**Dynamic index:** -	**Func. diagram:** -
	P-Group: Safety Integrated	**Units group:** -	**Unit selection:** -
	Not for motor type: -	**Scaling:** -	**Expert list:** 1
	Min	**Max**	**Factory setting**
	5.00 [ms]	1000.00 [ms]	100.00 [ms]

Description: Sets the evaluation delay for encoderless actual value sensing after pulse enable.
The value should be greater than or equal to the motor magnetizing time.

Dependency: Refer to: C01711

Notice: If this value is reduced, this can have a negative impact on the actual value acquisition and plausibility check – and result in Safety message C01711 with the message value 1041 or 1042.
When the value is increased, this results in a longer evaluation delay.

Note: This parameter is only effective for encoderless actual value sensing (p9506/p9306 = 1, 3).

p9587 SI Motion act val sensing sensorless filter time (Control Unit) / SI Mtn SL filt CU

VECTOR_G	**Can be changed:** C2(95)	**Calculated:** -	**Access level:** 3
	Data type: FloatingPoint32	**Dynamic index:** -	**Func. diagram:** -
	P-Group: Safety Integrated	**Units group:** -	**Unit selection:** -
	Not for motor type: -	**Scaling:** -	**Expert list:** 1
	Min	**Max**	**Factory setting**
	0.00 [ms]	100.00 [ms]	25.00 [ms]

Description: Sets the filter time for smoothing the actual value with sensorless actual value sensing.

Note: This parameter is only effective for encoderless actual value sensing (p9506/p9306 = 1, 3).

© Siemens AG 2012 All Rights Reserved

p9588 SI Motion act val sensing sensorless min current (Control Unit) / SI Mtn SL I_min CU

VECTOR_G

Can be changed: C2(95)	**Calculated:** -	**Access level:** 3
Data type: FloatingPoint32	**Dynamic index:** -	**Func. diagram:** -
P-Group: Safety Integrated	**Units group:** -	**Unit selection:** -
Not for motor type: -	**Scaling:** -	**Expert list:** 1
Min	**Max**	**Factory setting**
0.00 [%]	1000.00 [%]	10.00 [%]

Description: Sets the minimum current for encoderless actual value sensing in reference to 10 mA (i.e. when 1 % = 10 mA).
- The value must be increased if C01711 has occurred with message value 1042.
- The value must be decreased if C01711 has occurred with message value 1041.

Dependency: Refer to: r9785
Refer to: C01711

Notice: Reducing this percentage value can adversely affect actual value sensing.

Note: This parameter is only effective for encoderless actual value sensing (p9506/p9306 = 1, 3).

p9589 SI Motion voltage tolerance acceleration (Control Unit) / SI Mtn U tol CU

VECTOR_G

Can be changed: C2(95)	**Calculated:** -	**Access level:** 3
Data type: FloatingPoint32	**Dynamic index:** -	**Func. diagram:** -
P-Group: Safety Integrated	**Units group:** -	**Unit selection:** -
Not for motor type: -	**Scaling:** -	**Expert list:** 1
Min	**Max**	**Factory setting**
10.00 [%]	3300.00 [%]	100.00 [%]

Description: Sets the voltage tolerance for suppressing acceleration peaks.
An increase in this percentage value means that voltage peaks will need to have a higher amplitude when accelerating if they are not to affect actual value sensing.
- The value must be increased if C01711 with message value 1043 has occurred.
- The value must be lowered if acceleration procedures have led to an excessive Safety actual velocity.

Dependency: Refer to: r9784
Refer to: C01711

Note: This parameter is only effective for encoderless actual value sensing (p9506/p9306 = 1, 3).

r9590[0...3] SI Motion version safety motion monitoring (Control Unit) / SI Mtn version CU

VECTOR_G

Can be changed: -	**Calculated:** -	**Access level:** 3
Data type: Unsigned16	**Dynamic index:** -	**Func. diagram:** -
P-Group: Safety Integrated	**Units group:** -	**Unit selection:** -
Not for motor type: -	**Scaling:** -	**Expert list:** 1
Min	**Max**	**Factory setting**
-	-	-

Description: Displays the Safety Integrated version for the safe monitoring functions.

Index:
[0] = Safety Version (major release)
[1] = Safety Version (minor release)
[2] = Safety Version (baselevel or patch)
[3] = Safety Version (hotfix)

Dependency: Refer to: r9770, r9870, r9890

Note: Example:
r9590[0] = 2, r9590[1] = 60, r9590[2] = 1, r9590[3] = 0 --> SI Motion version V02.60.01.00

© Siemens AG 2012 All Rights Reserved

p9601 SI enable, functions integrated in the drive (Control Unit) / SI enable fct CU

VECTOR_G

Can be changed: C2(95)	**Calculated:** -	**Access level:** 3
Data type: Unsigned32	**Dynamic index:** -	**Func. diagram:** -
P-Group: Safety Integrated	**Units group:** -	**Unit selection:** -
Not for motor type: -	**Scaling:** -	**Expert list:** 1
Min	**Max**	**Factory setting**
-	-	0000 0000 bin

Description:

Sets the enable signals for the safety functions integrated in the drive and the type of selection on the Control Unit.

Not all of the settings listed below will be permissible, depending on the Control Unit and Motor Module or Power Module being used:

0000 hex:

Safety functions integrated in the drive inhibited (no safety function).

0001 hex:

Basic functions are enabled via onboard terminals (permissible for r9771.0 = 1).

0004 hex:

Extended functions via Terminal Module 54F (TM54F) have been enabled (permissible for r9771.5 = 1).

0005 hex:

Extended functions via Terminal Module 54F (TM54F) and the basic functions via onboard terminals have been enabled (permissible for r9771.5 = 1).

0008 hex:

Basic functions are enabled via PROFIsafe (permissible for r9771.6 = 1).

0009 hex:

Basic functions are enabled via PROFIsafe onboard terminals (permissible for r9771.6 = 1).

000C hex:

Extended functions are enabled via PROFIsafe (permissible for r9771.4 = 1).

000D hex:

Extended functions are enabled via PROFIsafe and basic functions via onboard terminals (permissible for r9771.4 = 1).

0024 hex:

Extended functions without selection are enabled (permissible for r9771.16 = 1).

0025 hex:

Extended functions without selection and basic functions via onboard terminals are enabled (permissible for r9771.16 = 1).

Bit field:

Bit	Signal name	1 signal	0 signal	FP
00	STO (SH) via terminals (Control Unit) enable	Enable	Inhibit	2810
02	Enable drive_integr motion_monitoring functions (Control Unit)	Enable	Inhibit	-
03	PROFIsafe (Control Unit) enable	Enable	Inhibit	-
05	Enable drv_integ motion_mon fct w/o selection (Control Unit)	Enable	Inhibit	-

Dependency:

Refer to: r9771, p9801

Note:

A change always becomes effective only after a POWER ON. Exception: Changes to p9601.0 become effective immediately.

CU: Control Unit

STO: Safe Torque Off / SH: Safe standstill

SS1: Safe Stop 1 (corresponds to Stop Category 1 acc. to EN60204)

SI: Safety Integrated

SMM: Safe Motion Monitoring

F-DI: Failsafe Digital Input

F-DO: Failsafe Digital Output

© Siemens AG 2012 All Rights Reserved

p9602 SI enable Safe Brake Control (Control Unit) / SI enable SBC CU

VECTOR_G

Can be changed: C2(95)	**Calculated:** -	**Access level:** 3
Data type: Integer16	**Dynamic index:** -	**Func. diagram:** 2814
P-Group: Safety Integrated	**Units group:** -	**Unit selection:** -
Not for motor type: -	**Scaling:** -	**Expert list:** 1
Min	**Max**	**Factory setting**
0	1	0

Description: Sets the enable signal for the function "Safe Brake Control" (SBC) on the Control Unit.

Value:
0: Inhibit SBC
1: Enable SBC

Dependency: Refer to: p9802

Note: The "Safe Brake Control" function is not activated until at least one safety monitoring function has been enabled (i.e. p9501 not equal to 0 and/or p9601 not equal to 0).

It does not make sense to parameterize "no motor holding brake available" and enable "Safe Brake Control" (p1215 = 0, p9602 = p9802 = 1) if there is no motor holding brake.

The parameterization "motor holding brake the same as sequence control, connection via BICO" and "Safe Brake Control" enabled (p1215 = 3, p9602 = 1, p9802 = 1) is not practical.

It is not permissible to parameterize "motor holding brake without feedback signals" and also enable "safe brake control" (p1278 = 1, p9602 = 1, p9802 = 1).

CU: Control Unit

SBC: Safe Brake Control

SI: Safety Integrated

p9610 SI PROFIsafe address (Control Unit) / SI PROFIsafe CU

VECTOR_G

Can be changed: C2(95)	**Calculated:** -	**Access level:** 3
Data type: Unsigned16	**Dynamic index:** -	**Func. diagram:** -
P-Group: Safety Integrated	**Units group:** -	**Unit selection:** -
Not for motor type: -	**Scaling:** -	**Expert list:** 1
Min	**Max**	**Factory setting**
0000 hex	FFFE hex	0000 hex

Description: Sets the PROFIsafe address for the Control Unit.

Dependency: Refer to: p9810

p9611 SI PROFIsafe telegram selection (Control Unit) / SI Ps telegram CU

VECTOR_G

Can be changed: C2(95)	**Calculated:** -	**Access level:** 3
Data type: Unsigned16	**Dynamic index:** -	**Func. diagram:** -
P-Group: Safety Integrated	**Units group:** -	**Unit selection:** -
Not for motor type: -	**Scaling:** -	**Expert list:** 1
Min	**Max**	**Factory setting**
0	998	998

Description: Sets the PROFIsafe telegram number for the Control Unit.

Value:
0: No PROFIsafe telegram selected
30: PROFIsafe standard telegram 30, PZD-1/1
31: PROFIsafe standard telegram 31, PZD-2/2
901: PROFIsafe SIEMENS telegram 901, PZD-3/5
902: PROFIsafe SIEMENS telegram 902, PZD-3/6
998: Compatibility mode (as for firmware version < 4.5)

Dependency: Refer to: p9811, p60022

© Siemens AG 2012 All Rights Reserved

p9620[0...7] BI: SI signal source for STO (SH)/SBC/SS1 (Control Unit) / SI S_srcSTO/SS1 CU

VECTOR_G	**Can be changed:** C2(95)	**Calculated:** -	**Access level:** 3
	Data type: Unsigned32 / Binary	**Dynamic index:** -	**Func. diagram:** 2810
	P-Group: Safety Integrated	**Units group:** -	**Unit selection:** -
	Not for motor type: -	**Scaling:** -	**Expert list:** 1
	Min	**Max**	**Factory setting**
	-	-	0

Description: Sets the signal source for the following functions on the Control Unit:
STO: Safe Torque Off / SH: Safe standstill
SBC: Safe Brake Control
SS1: Safe Stop 1 (time monitored)

Dependency: Refer to: p9601

Note: The following signal sources are permitted:
- fixed zero (standard setting).
- digital inputs DI 0 ... 7, 16, 17, 20, 21 on the Control Unit 320-2 (CU320-2).
- digital inputs DI 0 ... 3 on the Controller Extensions (CX32-2, NX10.3, NX15.3).
- digital inputs DI 0 ... 3, 16 on the Control Unit 310-2 (CU310-2).

It is not permitted to establish an interconnection to a digital input in the simulation mode.
For a parallel circuit configuration of n power units, the following applies:
p9620[0] = Signal source for power unit 1
...
p9620[n-1] = Signal source for power unit n

p9621 BI: SI Safe Brake Adapter signal source (Control Unit) / SI SBA S_src CU

VECTOR_G	**Can be changed:** C2(95)	**Calculated:** -	**Access level:** 3
	Data type: Unsigned32 / Binary	**Dynamic index:** -	**Func. diagram:** 2814
	P-Group: Safety Integrated	**Units group:** -	**Unit selection:** -
	Not for motor type: -	**Scaling:** -	**Expert list:** 1
	Min	**Max**	**Factory setting**
	-	-	0

Description: Sets the signal source for Safe Brake Adapter (SBA).
This defines via which digital input the Safe Brake Adapter feedback signal is read-in (SBA_DIAG).
p9621/p9821 = 0:
There is no Safe Brake Control (SBC) with Safe Brake Adapter (SBA) available.
p9621/p9821 = r0722.x (x = 0, 1 ... 7)
Safe Brake Adapter and Booksize unit (no Communication Interface Module (CIM)).
p9621/p9821 = r9872.3
Safe Brake Adapter and Chassis unit (CIM).

Dependency: Refer to: p9601, p9602, p9821

Note: No difference is tolerated for a crosswise data comparison between p9621 and p9821.
To use the "Safe Brake Adapter" function the following must apply:
p9601 = p9801 <> 0 and p9602 = p9802 = 1

p9622[0...1] SI SBA relay delay times (Control Unit) / SI SBA relay t CU

VECTOR_G	**Can be changed:** C2(95)	**Calculated:** -	**Access level:** 3
	Data type: FloatingPoint32	**Dynamic index:** -	**Func. diagram:** 2814
	P-Group: Safety Integrated	**Units group:** -	**Unit selection:** -
	Not for motor type: -	**Scaling:** -	**Expert list:** 1
	Min	**Max**	**Factory setting**
	0.00 [ms]	1000.00 [ms]	[0] 100.00 [ms] [1] 65.00 [ms]

Description: Sets the delay times for activating and de-activating the Safe Brake Adapter relay.

© Siemens AG 2012 All Rights Reserved

The relay-specific minimum delay times for evaluating the feedback signal contacts have to be set. They differ for the activation and de-activation of one and the same relay.

Index: [0] = Wait time activation
[1] = Wait time deactivation

Dependency: Refer to: p9822

Note: For a crosswise data comparison between p9622 and p9822, a difference of one Safety monitoring clock cycle is tolerated. The parameterized time is rounded internally to an integer multiple of the monitoring clock cycle.

The relay-specific minimum delay times (ms) for evaluating the feedback signal contacts are entered.

p9650 SI SGE changeover tolerance time (Control Unit) / SI SGE_chg tol CU

VECTOR_G

Can be changed: C2(95)	**Calculated:** -	**Access level:** 3
Data type: FloatingPoint32	**Dynamic index:** -	**Func. diagram:** 2810
P-Group: Safety Integrated	**Units group:** -	**Unit selection:** -
Not for motor type: -	**Scaling:** -	**Expert list:** 1
Min	**Max**	**Factory setting**
0.00 [ms]	2000.00 [ms]	500.00 [ms]

Description: Sets the tolerance time to change over the safety-related inputs (SGE) on the Control Unit.

An SGE changeover is not effective simultaneously due to the different runtimes in the two monitoring channels. After an SGE changeover, dynamic data is not subject to a crosswise data comparison during this tolerance time.

Dependency: Refer to: p9850

Note: For a crosswise data comparison between p9650 and p9850, a difference of one Safety monitoring clock cycle is tolerated.

The parameterized time is rounded internally to an integer multiple of the monitoring clock cycle.

SGE: Safety-related input (e.g. STO terminals)

p9651 SI STO/SBC/SS1 debounce time (Control Unit) / SI STO t_debou CU

VECTOR_G

Can be changed: C2(95)	**Calculated:** -	**Access level:** 3
Data type: FloatingPoint32	**Dynamic index:** -	**Func. diagram:** -
P-Group: Safety Integrated	**Units group:** -	**Unit selection:** -
Not for motor type: -	**Scaling:** -	**Expert list:** 1
Min	**Max**	**Factory setting**
0.00 [ms]	100.00 [ms]	0.00 [ms]

Description: Sets the debounce time for the failsafe digital inputs used to control STO/SBC/SS1.

Note: The debounce time is rounded to whole milliseconds. It specifies the maximum duration of a fault pulse at the fail-safe digital inputs with no reaction/influence on the selection or deselection of the Safety Basic Functions.

Example:

Debounce time = 1 ms: Fault pulses of 1 ms are filtered; only pulses longer than 2 ms are processed.

Debounce time = 3 ms: Fault pulses of 3 ms are filtered; only pulses longer than 4 ms are processed.

p9652 SI Safe Stop 1 delay time (Control Unit) / SI Stop 1 t_del CU

VECTOR_G

Can be changed: C2(95)	**Calculated:** -	**Access level:** 3
Data type: FloatingPoint32	**Dynamic index:** -	**Func. diagram:** -
P-Group: Safety Integrated	**Units group:** -	**Unit selection:** -
Not for motor type: -	**Scaling:** -	**Expert list:** 1
Min	**Max**	**Factory setting**
0.00 [s]	300.00 [s]	0.00 [s]

Description: Sets the delay time of the pulse suppression for the function "Safe Stop 1" (SS1) on the Control Unit to brake along the OFF3 down ramp (p1135).

Recommend.: In order that the drive can completely ramp-down along the OFF3 ramp and a motor holding brake that is possibly available can close, then the delay time should be set as follows:

Motor holding brake parameterized: delay time >= p1135 + p1228 + p1217

Motor holding brake not parameterized: delay time >= p1135 + p1228

Dependency: Refer to: p1135, p9852

© Siemens AG 2012 All Rights Reserved

Note: For a crosswise data comparison between p9652 and p9852, a difference of one Safety monitoring clock cycle is tolerated.
The parameterized time is rounded internally to an integer multiple of the monitoring clock cycle.
SS1: Safe Stop 1 (corresponds to Stop Category 1 acc. to EN60204)

p9653 SI Safe Stop 1 drive-based braking response / SI SS1 OFF3

VECTOR_G

Can be changed: C2(95)	**Calculated:** -	**Access level:** 3
Data type: Integer16	**Dynamic index:** -	**Func. diagram:** -
P-Group: Safety Integrated	**Units group:** -	**Unit selection:** -
Not for motor type: -	**Scaling:** -	**Expert list:** 1
Min	**Max**	**Factory setting**
0	1	0

Description: Sets the drive-based braking response for the "Safe Stop 1" (SS1) function.

Value:
0: SS1 with OFF3
1: SS1 without OFF3

Note: SS1: Safe Stop 1 (Safe Stop 1, corresponds to Stop Category 1 acc. to EN60204)

p9658 SI transition time STOP F to STOP A (Control Unit) / SI STOP F->A CU

VECTOR_G

Can be changed: C2(95)	**Calculated:** -	**Access level:** 3
Data type: FloatingPoint32	**Dynamic index:** -	**Func. diagram:** 2802
P-Group: Safety Integrated	**Units group:** -	**Unit selection:** -
Not for motor type: -	**Scaling:** -	**Expert list:** 1
Min	**Max**	**Factory setting**
0.00 [ms]	30000.00 [ms]	0.00 [ms]

Description: Sets the transition period from STOP F to STOP A on the Control Unit.

Dependency: Refer to: r9795, p9858
Refer to: F01611

Note: For a crosswise data comparison between p9658 and p9858, a difference of one Safety monitoring clock cycle is tolerated.
The parameterized time is rounded internally to an integer multiple of the monitoring clock cycle.
STOP F: Defect in a monitoring channel (error in the crosswise data comparison)
STOP A: Pulse suppression via the safety shutdown path

p9659 SI forced checking procedure timer / SI FCP Timer

VECTOR_G

Can be changed: C2(95)	**Calculated:** -	**Access level:** 3
Data type: FloatingPoint32	**Dynamic index:** -	**Func. diagram:** 2810
P-Group: Safety Integrated	**Units group:** -	**Unit selection:** -
Not for motor type: -	**Scaling:** -	**Expert list:** 1
Min	**Max**	**Factory setting**
0.00 [h]	9000.00 [h]	8.00 [h]

Description: Sets the time interval for carrying out the forced checking procedure and testing the Safety shutdown paths.
Within the parameterized time, STO must have been de-selected at least once. The monitoring time is reset each time that STO is de-selected.

Dependency: Refer to: A01699

Note: STO: Safe Torque Off / SH: Safe standstill

© Siemens AG 2012 All Rights Reserved

r9660 SI forced checking procedure remaining time / SI frc chk remain

VECTOR_G

Can be changed: -	**Calculated:** -	**Access level:** 3
Data type: FloatingPoint32	**Dynamic index:** -	**Func. diagram:** -
P-Group: Safety Integrated	**Units group:** -	**Unit selection:** -
Not for motor type: -	**Scaling:** -	**Expert list:** 1
Min	**Max**	**Factory setting**
- [h]	- [h]	- [h]

Description: Displays the time remaining before dynamization and testing of the safety shutdown paths (forced checking procedure).

Dependency: Refer to: A01699

p9697 SI Motion pulse suppression failsafe delay time (CU) / SI Mtn IL t_del CU

VECTOR_G

Can be changed: C2(95)	**Calculated:** -	**Access level:** 3
Data type: FloatingPoint32	**Dynamic index:** -	**Func. diagram:** -
P-Group: Safety Integrated	**Units group:** -	**Unit selection:** -
Not for motor type: -	**Scaling:** -	**Expert list:** 1
Min	**Max**	**Factory setting**
0.00 [ms]	800.00 [ms]	0.00 [ms]

Description: Sets the delay time for the pulse suppression after bus failure via failsafe values on the Control Unit (e.g. used for ESR).

Note: ESR: Extended Stop and Retract

p9700 SI Motion copy function / SI Mtn copy fct

TM54F_MA

Can be changed: C2(95), U, T	**Calculated:** -	**Access level:** 3
Data type: Integer16	**Dynamic index:** -	**Func. diagram:** -
P-Group: Safety Integrated	**Units group:** -	**Unit selection:** -
Not for motor type: -	**Scaling:** -	**Expert list:** 1
Min	**Max**	**Factory setting**
0000 hex	0057 hex	0000 hex

Description: Setting to start the required copy function.
After starting, the appropriate parameters are copied from the Control Unit to the Motor Module.
Once copying is complete, the parameter is automatically reset to zero.

Value:
0: [00 hex] Copy function ended
29: [1D hex] Start copy function node identifier
87: [57 hex] Start copy function SI parameters

Note: Re value = 57 hex:
The value can only be set if the safety commissioning mode is set and the Safety Integrated password was entered.
SI: Safety Integrated

p9700 SI Motion copy function / SI Mtn copy fct

VECTOR_G

Can be changed: C2(95), U, T	**Calculated:** -	**Access level:** 3
Data type: Integer16	**Dynamic index:** -	**Func. diagram:** -
P-Group: Safety Integrated	**Units group:** -	**Unit selection:** -
Not for motor type: -	**Scaling:** -	**Expert list:** 1
Min	**Max**	**Factory setting**
0000 hex	00D0 hex	0000 hex

Description: Setting to start the required copy function.
After starting, the appropriate parameters are copied from the Control Unit to the Motor Module.
Once copying is complete, the parameter is automatically reset to zero.

Value:
0: [00 hex] Copy function ended
29: [1D hex] Start copy function node identifier
87: [57 hex] Start copy function SI parameters
208: [D0 hex] Start copy function SI basic parameters

© Siemens AG 2012 All Rights Reserved

Note: Re value = 57 hex and D0 hex:
The value can only be set if the safety commissioning mode is set and the Safety Integrated password was entered.
Re value = D0 hex:
The following parameters are copied after starting the copy function:
p9601/p9801, p9602/p9802, p9610/9810, p9650/p9850, p9652/p9852, p9658/p9858

p9701 Acknowledge SI motion data change / Ackn SI Mtn dat

TM54F_MA, TM54F_SL

Can be changed: C2(95), U, T	**Calculated:** -	**Access level:** 3
Data type: Integer16	**Dynamic index:** -	**Func. diagram:** -
P-Group: Safety Integrated	**Units group:** -	**Unit selection:** -
Not for motor type: -	**Scaling:** -	**Expert list:** 1
Min	**Max**	**Factory setting**
0000 hex	00EC hex	0000 hex

Description: Setting to transfer the reference checksums from the associated actual checksums after changes (SI parameters, hardware).
After transferring the reference checksums, parameters are automatically reset to zero.

Value:
0: [00 hex] Data unchanged
172: [AC hex] Acknowledge data change complete
236: [EC hex] Acknowledge hardware CRC

Dependency: Refer to: r9398, p9399, r9728, p9729, r9798, p9799, r9898, p9899

Note: Re value = AC hex:
These values can only be set if the safety commissioning mode is set and the Safety Integrated password was entered.
SI: Safety Integrated

p9701 Acknowledge SI motion data change / Ackn SI Mtn dat

VECTOR_G

Can be changed: C2(95), U, T	**Calculated:** -	**Access level:** 3
Data type: Integer16	**Dynamic index:** -	**Func. diagram:** -
P-Group: Safety Integrated	**Units group:** -	**Unit selection:** -
Not for motor type: -	**Scaling:** -	**Expert list:** 1
Min	**Max**	**Factory setting**
0000 hex	00EC hex	0000 hex

Description: Setting to transfer the reference checksums from the associated actual checksums after changes (SI parameters, hardware).
After transferring the reference checksums, parameters are automatically reset to zero.

Value:
0: [00 hex] Data unchanged
172: [AC hex] Acknowledge data change complete
220: [DC hex] Acknowledge SI basic parameter change
236: [EC hex] Acknowledge hardware CRC

Dependency: Refer to: r9398, p9399, r9728, p9729, r9798, p9799, r9898, p9899

Note: Re value = AC and DC hex:
These values can only be set if the safety commissioning mode is set and the Safety Integrated password was entered.

p9705 BI: SI Motion: Test stop signal source / SI Mtn test stop

VECTOR_G

Can be changed: C2(95)	**Calculated:** -	**Access level:** 3
Data type: Unsigned32 / Binary	**Dynamic index:** -	**Func. diagram:** -
P-Group: Safety Integrated	**Units group:** -	**Unit selection:** -
Not for motor type: -	**Scaling:** -	**Expert list:** 1
Min	**Max**	**Factory setting**
-	-	0

Description: Sets the signal source for the test stop of the safety-relevant motion monitoring functions.

© Siemens AG 2012 All Rights Reserved

Caution: Before setting the signal source in p9705 it must be ensured that the signal source is at a logical 0.
If, in the Safety commissioning mode, the signal source in p9705 is set - and it already has a logical 1 - then a test stop is immediately initiated and the messages C01711/C30711 are output with message value 1005.

Notice: It is not permissible to use TM54F inputs to start the test stop.

r9708[0...4] SI Motion diagnostics safe position / SI mtn safe pos

VECTOR_G

Can be changed: -	**Calculated:** -	**Access level:** 3
Data type: FloatingPoint32	**Dynamic index:** -	**Func. diagram:** 2822
P-Group: Safety Integrated	**Units group:** -	**Unit selection:** -
Not for motor type: -	**Scaling:** -	**Expert list:** 1
Min	**Max**	**Factory setting**
- [mm]	- [mm]	- [mm]

Description: Displays the actual load-side actual values of both monitoring channels and their difference.

Index:
[0] = Load-side actual value on the CU
[1] = Load-side actual value on the second channel
[2] = Load-side actual value difference CU - second channel
[3] = Load-side max. actual value difference CU - second channel
[4] = Load-side actual value as safe position via PROFIsafe

Dependency: Refer to: r9713

Note: Re index 0:
The display of the load-side position actual value on the Control Unit is updated in the monitoring clock cycle.
Re index 1:
The display of the load-side position actual value on the second channel is updated in the CDC clock cycle (r9724) and delayed by one CDC clock cycle.
Re index 2:
The difference between the load-side position actual value on the Control Unit and load-side position actual value in the second channel is updated in the CDC clock cycle (r9724) and delayed by one CDC clock cycle.
Re index 3:
The maximum difference between the load-side position actual value on the Control Unit and the load-side position actual value on the second channel.
Re index 4:
Displays the load-side position actual value when enabling the function "Safe position via PROFIsafe".
The value is an average value from the values in index 0 and 1.
For a 16-bit notation, the value is influenced using the scaling factor (p9574/p9374).
When the function is not enabled, the content corresponds to the value in index 0.
CDC: Crosswise Data Comparison

r9708[0...4] SI Motion diagnostics safe position / SI mtn safe pos

VECTOR_G (Safety rot)

Can be changed: -	**Calculated:** -	**Access level:** 3
Data type: FloatingPoint32	**Dynamic index:** -	**Func. diagram:** 2822
P-Group: Safety Integrated	**Units group:** -	**Unit selection:** -
Not for motor type: -	**Scaling:** -	**Expert list:** 1
Min	**Max**	**Factory setting**
- [°]	- [°]	- [°]

Description: Displays the actual load-side actual values of both monitoring channels and their difference.

Index:
[0] = Load-side actual value on the CU
[1] = Load-side actual value on the second channel
[2] = Load-side actual value difference CU - second channel
[3] = Load-side max. actual value difference CU - second channel
[4] = Load-side actual value as safe position via PROFIsafe

Dependency: Refer to: r9713

© Siemens AG 2012 All Rights Reserved

Note: Re index 0:
The display of the load-side position actual value on the Control Unit is updated in the monitoring clock cycle.
Re index 1:
The display of the load-side position actual value on the second channel is updated in the CDC clock cycle (r9724) and delayed by one CDC clock cycle.
Re index 2:
The difference between the load-side position actual value on the Control Unit and load-side position actual value in the second channel is updated in the CDC clock cycle (r9724) and delayed by one CDC clock cycle.
Re index 3:
The maximum difference between the load-side position actual value on the Control Unit and the load-side position actual value on the second channel.
Re index 4:
Displays the load-side position actual value when enabling the function "Safe position via PROFIsafe".
The value is an average value from the values in index 0 and 1.
For a 16-bit notation, the value is influenced using the scaling factor (p9574/p9374).
When the function is not enabled, the content corresponds to the value in index 0.
CDC: Crosswise Data Comparison

r9710[0...1] SI Motion diagnostics result list 1 / SI Mtn res_list 1

VECTOR_G

Can be changed: -	**Calculated:** -	**Access level:** 3
Data type: Unsigned32	**Dynamic index:** -	**Func. diagram:** -
P-Group: Safety Integrated	**Units group:** -	**Unit selection:** -
Not for motor type: -	**Scaling:** -	**Expert list:** 1
Min	**Max**	**Factory setting**
-	-	-

Description: Displays result list 1 that, for the crosswise data comparison between the monitoring channels, led to the fault.

Index: [0] = Result list, second channel
[1] = Result list, drive

Bit field:

Bit	Signal name	1 signal	0 signal	FP
00	Actual value > upper limit SOS	Yes	No	-
01	Actual value > lower limit SOS	Yes	No	-
02	Actual value > upper limit, SLP1	Yes	No	-
03	Actual value > lower limit, SLP1	Yes	No	-
04	Actual value > upper limit, SLP2	Yes	No	-
05	Actual value > lower limit, SLP2	Yes	No	-
06	Actual value > upper limit, SLS1	Yes	No	-
07	Actual value > lower limit, SLS1	Yes	No	-
08	Actual value > upper limit, SLS2	Yes	No	-
09	Actual value > lower limit, SLS2	Yes	No	-
10	Actual value > upper limit, SLS3	Yes	No	-
11	Actual value > lower limit, SLS3	Yes	No	-
12	Actual value > upper limit, SLS4	Yes	No	-
13	Actual value > lower limit, SLS4	Yes	No	-
16	Actual value > upper limit, SAM/SBR	Yes	No	-
17	Actual value > lower limit, SAM/SBR	Yes	No	-
18	Actual value > upper limit SDI positive	Yes	No	-
19	Actual value > lower limit SDI positive	Yes	No	-
20	Actual value > upper limit SDI negative	Yes	No	-
21	Actual value > lower limit SDI negative	Yes	No	-

Dependency: Refer to: C01711

Note: SBR: Safe Brake Ramp (safe brake ramp monitoring)
SLP: Safely-Limited Position
SLS: Safely-Limited Speed
SOS: Safe Operating Stop

© Siemens AG 2012 All Rights Reserved

r9711[0...1] SI Motion diagnostics result list 2 / SI Mtn res_list 2

VECTOR_G

Can be changed: -	**Calculated:** -	**Access level:** 3
Data type: Unsigned32	**Dynamic index:** -	**Func. diagram:** -
P-Group: Safety Integrated	**Units group:** -	**Unit selection:** -
Not for motor type: -	**Scaling:** -	**Expert list:** 1
Min	**Max**	**Factory setting**
-	-	-

Description: Displays result list 2 that, for the crosswise data comparison between the monitoring channels, led to the fault.

Index: [0] = Result list, second channel
[1] = Result list, drive

Bit field:

Bit	Signal name	1 signal	0 signal	FP
00	Actual value > upper limit SCA1+	Yes	No	-
01	Actual value > lower limit, SCA1+	Yes	No	-
02	Actual value > upper limit SCA1-	Yes	No	-
03	Actual value > lower limit, SCA1-	Yes	No	-
04	Actual value > upper limit SCA2+	Yes	No	-
05	Actual value > lower limit, SCA2+	Yes	No	-
06	Actual value > upper limit SCA2-	Yes	No	-
07	Actual value > lower limit, SCA2-	Yes	No	-
08	Actual value > upper limit SCA3+	Yes	No	-
09	Actual value > lower limit, SCA3+	Yes	No	-
10	Actual value > upper limit SCA3-	Yes	No	-
11	Actual value > lower limit, SCA3-	Yes	No	-
12	Actual value > upper limit SCA4+	Yes	No	-
13	Actual value > lower limit, SCA4+	Yes	No	-
14	Actual value > upper limit SCA4-	Yes	No	-
15	Actual value > lower limit, SCA4-	Yes	No	-
16	Actual value > upper limit, SSM+	Yes	No	-
17	Actual value > lower limit, SSM+	Yes	No	-
18	Actual value > upper limit, SSM-	Yes	No	-
19	Actual value > lower limit, SSM-	Yes	No	-
20	Actual value > upper limit, modulo	Yes	No	-
21	Actual value > lower limit, modulo	Yes	No	-

Dependency: Refer to: C01711

Note: SCA: Safe Cam
SSM: Safe Speed Monitor (safety-relevant feedback signal from the velocity monitoring)

r9712 CO: SI Motion diagnostics position actual value motor side / SI Mtn s_act mot

VECTOR_G

Can be changed: -	**Calculated:** -	**Access level:** 3
Data type: Unsigned32	**Dynamic index:** -	**Func. diagram:** -
P-Group: Safety Integrated	**Units group:** -	**Unit selection:** -
Not for motor type: -	**Scaling:** -	**Expert list:** 1
Min	**Max**	**Factory setting**
-	-	-

Description: Displays the actual motor-side position actual value for the motion monitoring functions on the Control Unit.
For rotary axes, the following unit applies: Millidegrees
For linear axes, the following unit applies: micrometers

Note: The display is updated in the safety monitoring clock cycle.

© Siemens AG 2012 All Rights Reserved

r9713[0...4] CO: SI Motion diagnostics position actual value load side / SI Mtn s_act load

VECTOR_G	**Can be changed:** -	**Calculated:** -	**Access level:** 3
	Data type: Unsigned32	**Dynamic index:** -	**Func. diagram:** -
	P-Group: Safety Integrated	**Units group:** -	**Unit selection:** -
	Not for motor type: -	**Scaling:** -	**Expert list:** 1
	Min	**Max**	**Factory setting**
	-	-	-

Description: Displays the actual load-side actual values of both monitoring channels and their difference.

For rotary axes, the following unit applies: Millidegrees

For linear axes, the following unit applies: micrometers

Index:
[0] = Load-side actual value on the CU
[1] = Load-side actual value on the second channel
[2] = Load-side actual value difference CU - second channel
[3] = Load-side max. actual value difference CU - second channel
[4] = Load-side actual value as safe position via PROFIsafe

Dependency: Refer to: r9708, r9724

Note: The value of this parameter is displayed in r9708 with units (mm or degrees).

The display is updated in the safety monitoring clock cycle.

Re index 0:

The display of the load-side position actual value on the Control Unit is updated in the monitoring clock cycle.

Re index 1:

The display of the load-side position actual value on the second channel is updated in the CDC clock cycle (r9724) and delayed by one CDC clock cycle.

Re index 2:

The difference between the load-side position actual value on the Control Unit and load-side position actual value in the second channel is updated in the CDC clock cycle (r9724) and delayed by one CDC clock cycle.

Re index 3:

The maximum difference between the load-side position actual value on the Control Unit and the load-side position actual value on the second channel.

Re index 4:

Displays the load-side position actual value when enabling the function "Safe position via PROFIsafe".

The value is an average value from the values in index 0 and 1.

For a 16-bit notation, the value is influenced using the scaling factor (p9574/p9374).

When the function is not enabled, the content corresponds to the value in index 0.

CDC: Crosswise Data Comparison

r9714[0...2] CO: SI motion diagnostics velocity / SI Mtn diag v

VECTOR_G	**Can be changed:** -	**Calculated:** -	**Access level:** 3
	Data type: FloatingPoint32	**Dynamic index:** -	**Func. diagram:** -
	P-Group: Safety Integrated	**Units group:** -	**Unit selection:** -
	Not for motor type: -	**Scaling:** -	**Expert list:** 1
	Min	**Max**	**Factory setting**
	- [mm/min]	- [mm/min]	- [mm/min]

Description: Displays the velocity actual values for the motion monitoring functions on the Control Unit.

Index:
[0] = Load-side velocity actual value on the Control Unit
[1] = Actual SAM/SBR velocity limit on the Control Unit
[2] = Actual SLS velocity limit on the Control Unit

Dependency: Refer to: r9732

Notice: Re index 2:

This SLS velocity limit can, as a result of conversion into the internal monitoring format, deviate from the specified SLS velocity limit (see r9732).

© Siemens AG 2012 All Rights Reserved

Note: The display is updated in the safety monitoring clock cycle.
For linear axes, the following unit applies: millimeters per minute
For rotary axes, the following unit applies: revolutions per minute

r9714[0...2] CO: SI motion diagnostics velocity / SI Mtn diag v

VECTOR_G (Safety rot)

Can be changed: -	**Calculated:** -	**Access level:** 3
Data type: FloatingPoint32	**Dynamic index:** -	**Func. diagram:** -
P-Group: Safety Integrated	**Units group:** -	**Unit selection:** -
Not for motor type: -	**Scaling:** -	**Expert list:** 1
Min	**Max**	**Factory setting**
- [rpm]	- [rpm]	- [rpm]

Description: Displays the velocity actual values for the motion monitoring functions on the Control Unit.

Index: [0] = Load-side velocity actual value on the Control Unit
[1] = Actual SAM/SBR velocity limit on the Control Unit
[2] = Actual SLS velocity limit on the Control Unit

Dependency: Refer to: r9732

Notice: Re index 2:
This SLS velocity limit can, as a result of conversion into the internal monitoring format, deviate from the specified SLS velocity limit (see r9732).

Note: The display is updated in the safety monitoring clock cycle.
For linear axes, the following unit applies: millimeters per minute
For rotary axes, the following unit applies: revolutions per minute

r9718.23 CO/BO: SI Motion control signals 1 / SI Mtn ctrl_sig 1

VECTOR_G

Can be changed: -	**Calculated:** -	**Access level:** 4
Data type: Unsigned32	**Dynamic index:** -	**Func. diagram:** -
P-Group: Safety Integrated	**Units group:** -	**Unit selection:** -
Not for motor type: -	**Scaling:** -	**Expert list:** 1
Min	**Max**	**Factory setting**
-	-	-

Description: Control signal 1 for safety-relevant motion monitoring functions.

Bit field:

Bit	Signal name	1 signal	0 signal	FP
23	Set offset for TfS to the actual torque	Set	Reset	-

Note: TfS: Traverse to fixed stop

r9719.0...31 CO/BO: SI Motion control signals 2 / SI Mtn ctrl_sig 2

VECTOR_G

Can be changed: -	**Calculated:** -	**Access level:** 3
Data type: Unsigned32	**Dynamic index:** -	**Func. diagram:** -
P-Group: Safety Integrated	**Units group:** -	**Unit selection:** -
Not for motor type: -	**Scaling:** -	**Expert list:** 1
Min	**Max**	**Factory setting**
-	-	-

Description: Control signal 2 for safety-relevant motion monitoring functions.

Bit field:

Bit	Signal name	1 signal	0 signal	FP
00	De-select SOS/SLS (SBH/SG)	Yes	No	-
01	De-select SOS (SBH)	Yes	No	-
03	Select SLS (SG) bit 0	Set	Not set	-
04	Select SLS (SG) bit 1	Set	Not set	-
05	Deselect SDI positive	Yes	No	-
06	Deselect SDI negative	Yes	No	-
07	Deselect SLP	Yes	No	-
08	Gearbox selection, bit 0	Set	Not set	-
09	Gearbox selection, bit 1	Set	Not set	-
10	Gearbox selection, bit 2	Set	Not set	-
12	Select SLP (SE) position range	SLP2 (SE2)	SLP1 (SE1)	-

© Siemens AG 2012 All Rights Reserved

13	Close brake from control	Yes	No	-
15	Select test stop	Yes	No	-
16	SGE valid	Yes	No	-
18	De-select external STOP A	Yes	No	-
19	De-select external STOP C	Yes	No	-
20	De-select external STOP D	Yes	No	-
21	De-select external STOP E	Yes	No	-
28	SLS (SG) override bit 0	Set	Not set	-
29	SLS (SG) override bit 1	Set	Not set	-
30	SLS (SG) override bit 2	Set	Not set	-
31	SLS (SG) override bit 3	Set	Not set	-

Note: Re r9719.0 and r9719.1:

These two bits must be considered together.

- if SOS/SLS (SBH/SG) is de-selected using bit 0, then assignment of bit 1 is irrelevant.

- if SOS/SLS (SBH/SG) is selected using bit 0, then a changeover is made between SOS (SBH) and SLS (SG) using bit 1.

SLP: Safely-Limited Position / SE: Safe software limit switches

SLS: Safely-Limited Speed / SG: Safely reduced speed

SOS: Safe Operating Stop / SBH: Safe operating stop

SDI: Safe Direction (safe motion direction)

r9720.0...19 CO/BO: SI Motion control signals integrated in the drive / SI Mtn integ STW

VECTOR_G

Can be changed: -	**Calculated:** -	**Access level:** 3
Data type: Unsigned32	**Dynamic index:** -	**Func. diagram:** 2840, 2855
P-Group: Safety Integrated	**Units group:** -	**Unit selection:** -
Not for motor type: -	**Scaling:** -	**Expert list:** 1
Min	**Max**	**Factory setting**
-	-	-

Description: Control signals for safety-relevant motion monitoring functions integrated in the drive.

Bit field:

Bit	Signal name	1 signal	0 signal	FP
00	De-select STO	Yes	No	-
01	De-select SS1	Yes	No	-
02	De-select SS2	Yes	No	-
03	De-select SOS	Yes	No	-
04	De-select SLS	Yes	No	-
06	Deselect SLP	Yes	No	2822
07	Acknowledgement	Signal edge active	No	-
09	Select SLS bit 0	Set	Not set	-
10	Select SLS bit 1	Set	Not set	-
12	Deselect SDI positive	Yes	No	2861
13	Deselect SDI negative	Yes	No	2861
19	Select SLP position range	SLP2	SLP1	2822

Note: This parameter is only supplied with actual values in the case of Safety Integrated Extended Functions. For Safety Integrated Basic Functions (SBC, SS1, STO), the value is equal to zero.

r9721.0...15 CO/BO: SI Motion status signals / SI Mtn stat_sig

VECTOR_G

Can be changed: -	**Calculated:** -	**Access level:** 3
Data type: Unsigned32	**Dynamic index:** -	**Func. diagram:** -
P-Group: Safety Integrated	**Units group:** -	**Unit selection:** -
Not for motor type: -	**Scaling:** -	**Expert list:** 1
Min	**Max**	**Factory setting**
-	-	-

Description: Status signal for safety-relevant motion monitoring functions.

Bit field:

Bit	Signal name	1 signal	0 signal	FP
00	SOS or SLS active	Yes	No	-
01	SOS active	Yes	No	-
02	Pulse enable	Deleted	Enabled	-

© Siemens AG 2012 All Rights Reserved

03	Active SLS stage bit 0	Set	Not set	-
04	Active SLS stage bit 1	Set	Not set	-
05	Velocity below limit value n_x	Yes	No	-
06	SLP active	Yes	No	-
07	Safely referenced	Yes	No	-
08	SDI pos active	Yes	No	-
09	SDI neg active	Yes	No	-
10	SLP active position area	SLP2	SLP1	-
12	STOP A or B active	Yes	No	-
13	STOP C active	Yes	No	-
14	STOP D active	Yes	No	-
15	STOP E active	Yes	No	-

Note: This parameter is only supplied with actual values in the case of Safety Integrated Extended Functions. For Safety Integrated Basic Functions (SBC, SS1, STO), the value is equal to zero.

r9722.0...31 CO/BO: SI Motion status signals integrated in the drive / SI Mtn integ stat

VECTOR_G

Can be changed: -	**Calculated:** -	**Access level:** 3
Data type: Unsigned32	**Dynamic index:** -	**Func. diagram:** 2840, 2855
P-Group: Safety Integrated	**Units group:** -	**Unit selection:** -
Not for motor type: -	**Scaling:** -	**Expert list:** 1
Min	**Max**	**Factory setting**
-	-	-

Description: Status signal for safety-relevant motion monitoring functions integrated in the drive.

Bit field:

Bit	Signal name	1 signal	0 signal	FP
00	STO or safe pulse cancellation active	Yes	No	-
01	SS1 active	Yes	No	-
02	SS2 active	Yes	No	-
03	SOS active	Yes	No	-
04	SLS active	Yes	No	-
06	SLP active	Yes	No	2822
07	Internal event	No	Yes	-
09	Active SLS stage bit 0	Set	Not set	-
10	Active SLS stage bit 1	Set	Not set	-
11	SOS selected	Yes	No	-
12	SDI pos active	Yes	No	2861
13	SDI neg active	Yes	No	2861
15	SSM (speed below limit value)	Yes	No	2860
19	SLP active position area	SLP2	SLP1	2822
22	SP valid	Yes	No	-
23	Safely referenced	Yes	No	-
30	SLP limit upper maintained	Yes	No	2822
31	SLP limit lower maintained	Yes	No	2822

Notice: Re bit 07:

The signal state behaves in an opposite way to the PROFIsafe Standard.

Note: This parameter is only supplied with actual values in the case of Safety Integrated Extended Functions. For Safety Integrated Basic Functions (SBC, SS1, STO), the value is equal to zero.

Re bit 07:

An internal event is displayed if a STOP A ... F is active.

r9723.0...17 CO/BO: SI Motion diagnostic signals integrated in the drive / SI Mtn integ diag

VECTOR_G

Can be changed: -	**Calculated:** -	**Access level:** 3
Data type: Unsigned32	**Dynamic index:** -	**Func. diagram:** -
P-Group: Safety Integrated	**Units group:** -	**Unit selection:** -
Not for motor type: -	**Scaling:** -	**Expert list:** 1
Min	**Max**	**Factory setting**
-	-	-

Description: Displays the diagnostic signals for safety-relevant motion monitoring functions integrated in the drive.

© Siemens AG 2012 All Rights Reserved

Bit field:

Bit	Signal name	1 signal	0 signal	FP
00	Forced checking procedure required	Yes	No	-
01	For ESR, STOP F and subsequent stop B is active	Yes	No	-
02	Communication failure	Yes	No	-
03	Actual value sensing supplies valid value	Yes	No	-
04	Encoderless act val sensing acc to technique for U/f control	Yes	No	-
09	Safe pulse cancellation active	Yes	No	-
16	SAM/SBR active	Yes	No	-
17	Position referenced	Yes	No	-

Note: ESR: Extended Stop and Retract
SAM: Safe Acceleration Monitor (safe acceleration monitoring)
SBR: Safe Brake Ramp (safe brake ramp monitoring)

r9724 SI Motion crosswise comparison clock cycle / SI Mtn CDC clk cyc

VECTOR_G

Can be changed: -	**Calculated:** -	**Access level:** 3
Data type: FloatingPoint32	**Dynamic index:** -	**Func. diagram:** -
P-Group: Safety Integrated	**Units group:** -	**Unit selection:** -
Not for motor type: -	**Scaling:** -	**Expert list:** 1
Min	**Max**	**Factory setting**
- [ms]	- [ms]	- [ms]

Description: Displays the crosswise comparison clock cycle.
The value indicates the clock cycle time with which each individual CDC value is compared between the two monitoring channels.

Dependency: Refer to: p9500

Note: Crosswise comparison clock cycle = monitoring clock cycle (p9500) * number of data to be crosswise compared
CDC: Crosswise Data Comparison

r9725[0...2] SI Motion, diagnostics STOP F / SI Mtn Diag STOP F

VECTOR_G

Can be changed: -	**Calculated:** -	**Access level:** 3
Data type: Unsigned32	**Dynamic index:** -	**Func. diagram:** -
P-Group: Safety Integrated	**Units group:** -	**Unit selection:** -
Not for motor type: -	**Scaling:** -	**Expert list:** 1
Min	**Max**	**Factory setting**
-	-	-

Description: Re index 0:
Displays the message value that resulted in the STOP F on the drive.
Value = 0:
The Control Unit signaled a STOP F.
Value = 1 ... 999:
Number of the incorrect date in the crosswise data comparison between the monitoring channels.
Value >= 1000:
Additional diagnostic values of the drive.
Re index 1:
Displays the value of the Control Unit that resulted in the STOP F.
Re index 2:
Displays the value from the second channel that resulted in the STOP F.

Index: [0] = Message value for CDC
[1] = Control Unit CDC actual value
[2] = Components CDC actual value

Dependency: Refer to: C01711

Note: The significance of the individual message values is described in message C01711.
CDC: Crosswise Data Comparison

© Siemens AG 2012 All Rights Reserved

p9726 SI Motion, user agreement selection/de-selection / SI Mtn UserAgr sel

VECTOR_G

Can be changed: U, T	**Calculated:** -	**Access level:** 3
Data type: Integer16	**Dynamic index:** -	**Func. diagram:** -
P-Group: Safety Integrated	**Units group:** -	**Unit selection:** -
Not for motor type: -	**Scaling:** -	**Expert list:** 1
Min	**Max**	**Factory setting**
0000 hex	00AC hex	0000 hex

Description: Setting to select and de-select the user agreement.

Value:
0: [00 hex] De-select user agreement
172: [AC hex] Select user agreement

Dependency: Refer to: r9727

r9727 SI Motion user agreement, inside the drive / SI Mtn UserAgr int

VECTOR_G

Can be changed: -	**Calculated:** -	**Access level:** 3
Data type: Integer16	**Dynamic index:** -	**Func. diagram:** 2822
P-Group: Safety Integrated	**Units group:** -	**Unit selection:** -
Not for motor type: -	**Scaling:** -	**Expert list:** 1
Min	**Max**	**Factory setting**
-	-	-

Description: Displays the internal state of the user agreement.
Value = 0: User agreement is not set.
Value = AC hex: User agreement is set.

Dependency: Refer to: p9726

r9728[0...2] SI Motion actual checksum, SI parameters / SI Mtn act CRC

VECTOR_G

Can be changed: -	**Calculated:** -	**Access level:** 3
Data type: Unsigned32	**Dynamic index:** -	**Func. diagram:** -
P-Group: Safety Integrated	**Units group:** -	**Unit selection:** -
Not for motor type: -	**Scaling:** -	**Expert list:** 1
Min	**Max**	**Factory setting**
-	-	-

Description: Displays the checksum over the checked Safety Integrated parameters of the motion monitoring functions (actual checksum).

Index:
[0] = Checksum over SI parameters for motion monitoring
[1] = Checksum over SI parameters for actual values
[2] = Checksum over SI parameters for hardware

Dependency: Refer to: p9729
Refer to: F01680

p9729[0...2] SI Motion reference checksum, SI parameters / SI Mtn ref CRC

VECTOR_G

Can be changed: C2(95)	**Calculated:** -	**Access level:** 3
Data type: Unsigned32	**Dynamic index:** -	**Func. diagram:** -
P-Group: Safety Integrated	**Units group:** -	**Unit selection:** -
Not for motor type: -	**Scaling:** -	**Expert list:** 1
Min	**Max**	**Factory setting**
0000 hex	FFFF FFFF hex	0000 hex

Description: Sets the checksum using the checksum-tested Safety Integrated parameters for motion monitoring functions (reference checksum).

Index:
[0] = Checksum over SI parameters for motion monitoring
[1] = Checksum over SI parameters for actual values
[2] = Checksum over SI parameters for hardware

Dependency: Refer to: r9728
Refer to: F01680

© Siemens AG 2012 All Rights Reserved

r9730 SI Motion Safe maximum velocity / SI mtn safe v_Max

VECTOR_G	**Can be changed:** -	**Calculated:** -	**Access level:** 3
	Data type: FloatingPoint32	**Dynamic index:** -	**Func. diagram:** -
	P-Group: Safety Integrated	**Units group:** -	**Unit selection:** -
	Not for motor type: -	**Scaling:** -	**Expert list:** 1
	Min - [mm/min]	**Max** - [mm/min]	**Factory setting** - [mm/min]

Description: Displays the safe maximum velocity (on the load side) that is permissible for the safe motion monitoring functions as a result of the actual value sensing.

This parameter indicates up to which load velocity the safe encoder actual values (redundant encoder coarse position) can still be correctly detected as a result of the particular encoder parameterization.

This parameter is only of significance for enabled safety with encoder (otherwise "0").

Note: If the value displayed is exceeded, message C01711 is output indicating relevant subsequent faults.

r9730 SI Motion Safe maximum velocity / SI mtn safe v_Max

VECTOR_G (Safety rot)	**Can be changed:** -	**Calculated:** -	**Access level:** 3
	Data type: FloatingPoint32	**Dynamic index:** -	**Func. diagram:** -
	P-Group: Safety Integrated	**Units group:** -	**Unit selection:** -
	Not for motor type: -	**Scaling:** -	**Expert list:** 1
	Min - [rpm]	**Max** - [rpm]	**Factory setting** - [rpm]

Description: Displays the safe maximum velocity (on the load side) that is permissible for the safe motion monitoring functions as a result of the actual value sensing.

This parameter indicates up to which load velocity the safe encoder actual values (redundant encoder coarse position) can still be correctly detected as a result of the particular encoder parameterization.

This parameter is only of significance for enabled safety with encoder (otherwise "0").

Note: If the value displayed is exceeded, message C01711 is output indicating relevant subsequent faults.

r9731 SI Motion safe position accuracy / SI Mtn pos acc

VECTOR_G	**Can be changed:** -	**Calculated:** -	**Access level:** 3
	Data type: FloatingPoint32	**Dynamic index:** -	**Func. diagram:** -
	P-Group: Safety Integrated	**Units group:** -	**Unit selection:** -
	Not for motor type: -	**Scaling:** -	**Expert list:** 1
	Min - [mm]	**Max** - [mm]	**Factory setting** - [mm]

Description: Displays the safe position accuracy (load side).

As a result of the actual value sensing for safe motion monitoring functions, this accuracy can be achieved as the maximum.

Note: The parameter is only of significance for enabled safety with encoder (otherwise "0").

r9731 SI Motion safe position accuracy / SI Mtn pos acc

VECTOR_G (Safety rot)	**Can be changed:** -	**Calculated:** -	**Access level:** 3
	Data type: FloatingPoint32	**Dynamic index:** -	**Func. diagram:** -
	P-Group: Safety Integrated	**Units group:** -	**Unit selection:** -
	Not for motor type: -	**Scaling:** -	**Expert list:** 1
	Min - [°]	**Max** - [°]	**Factory setting** - [°]

Description: Displays the safe position accuracy (load side).

As a result of the actual value sensing for safe motion monitoring functions, this accuracy can be achieved as the maximum.

Note: The parameter is only of significance for enabled safety with encoder (otherwise "0").

© Siemens AG 2012 All Rights Reserved

r9732 SI Motion velocity resolution / SI Mtn v_res

VECTOR_G	**Can be changed:** -	**Calculated:** -	**Access level:** 3
	Data type: FloatingPoint32	**Dynamic index:** -	**Func. diagram:** -
	P-Group: Safety Integrated	**Units group:** -	**Unit selection:** -
	Not for motor type: -	**Scaling:** -	**Expert list:** 1
	Min - [mm/min]	**Max** - [mm/min]	**Factory setting** - [mm/min]

Description: Displays the safe velocity resolution (load side).

Setpoints for velocity limits or parameter changes for velocities below this threshold have no effect.

Note: This parameter does not provide any information about the actual accuracy of the velocity sensing. This depends on the type of actual value sensing, the gear factors as well as the quality of the encoder being used.

r9732 SI Motion velocity resolution / SI Mtn v_res

VECTOR_G (Safety rot)	**Can be changed:** -	**Calculated:** -	**Access level:** 3
	Data type: FloatingPoint32	**Dynamic index:** -	**Func. diagram:** -
	P-Group: Safety Integrated	**Units group:** -	**Unit selection:** -
	Not for motor type: -	**Scaling:** -	**Expert list:** 1
	Min - [rpm]	**Max** - [rpm]	**Factory setting** - [rpm]

Description: Displays the safe velocity resolution (load side).

Setpoints for velocity limits or parameter changes for velocities below this threshold have no effect.

Note: This parameter does not provide any information about the actual accuracy of the velocity sensing. This depends on the type of actual value sensing, the gear factors as well as the quality of the encoder being used.

r9733[0...2] CO: SI Motion setpoint speed limit effective / SI Mtn setp_lim

VECTOR_G	**Can be changed:** -	**Calculated:** -	**Access level:** 3
	Data type: FloatingPoint32	**Dynamic index:** -	**Func. diagram:** 2820, 2861, 3630
	P-Group: Safety Integrated	**Units group:** 3_1	**Unit selection:** p0505
	Not for motor type: -	**Scaling:** p2000	**Expert list:** 1
	Min - [rpm]	**Max** - [rpm]	**Factory setting** - [rpm]

Description: Displays the necessary setpoint speed limit as a result of the selected motion monitoring functions.

Contrary to the parameterization of the SI limit values, this parameter specifies the motor-side limit value and not the load-side limit value.

Recommend.: For the ramp-function generator, by appropriately interconnecting the speed limits p1051 and p1052 with r9733[0, 1], a drive-based setpoint velocity limiting can be realized.

- CI: p1051 = r9733[0]
- CI: p1052 = r9733[1]

Additional limiting can also be activated using connector input p1085 and p1088.

Index: [0] = Setpoint limiting positive
[1] = Setpoint limiting negative
[2] = Setpoint limit absolute

Dependency: For SLS: r9733[0] = p9531[x] x p9533 (converted from the load side to the motor side)

For SDI negative: r9733[0] = 0

For SLS: r9733[1] = - p9531[x] x p9533 (converted from the load side to the motor side)

For SDI positive: r9733[1] = 0

[x] = Selected SLS stage

Conversion factor from the motor side to the load side:

- motor type = rotary and axis type = linear: p9522 / (p9521 x p9520)
- otherwise: p9522 / p9521

Refer to: p9531, p9533

© Siemens AG 2012 All Rights Reserved

Notice: If p1051 = r9733[0] is interconnected, p1052 = r9733[1] must also be interconnected and vice versa.
If only the absolute value of the setpoint velocity limiting is required, r9733[2] must be interconnected.

Note: The unit changeover between linear and rotary axis is not implemented via the safety changeover (p9502) but by the linear motor changeover.
If the "SLS" or "SDI" function is not selected, r9733[0] shows p1082 and r9733[1] shows -p1082.
The display in r9733 can be delayed by up to one Safety monitoring clock cycle as compared to the display in r9719/r9720 and r9721/r9722.

r9734.0...15 CO/BO: SI Motion Safety Info Channel status word / SI Mtn info ch ZSW

VECTOR_G

Can be changed: -	**Calculated:** -	**Access level:** 3
Data type: Unsigned16	**Dynamic index:** -	**Func. diagram:** -
P-Group: Safety Integrated	**Units group:** -	**Unit selection:** -
Not for motor type: -	**Scaling:** -	**Expert list:** 1
Min	**Max**	**Factory setting**
-	-	-

Description: Displays the status word for the Safety information channel.

Bit field:

Bit	Signal name	1 signal	0 signal	FP
00	STO active	Yes	No	-
01	SS1 active	Yes	No	-
02	SS2 active	Yes	No	-
03	SOS active	Yes	No	-
04	SLS active	Yes	No	-
05	SOS selected	Yes	No	-
06	SLS selected	Yes	No	-
07	Internal event	Yes	No	-
12	SDI positive selected	Yes	No	-
13	SDI neg selected	Yes	No	-
14	ESR retract requested	Yes	No	-
15	Safety message present	Yes	No	-

Note: This parameter is only supplied with actual values in the case of Safety Integrated Extended Functions. For Safety Integrated Basic Functions (SBC, SS1, STO), the value is equal to zero.
Re bit 07:
An internal event is displayed if a STOP A ... F is active.

p9740 SI Motion, user agreement selection/de-selection MM / SI mtn UserAgr MM

VECTOR_G

Can be changed: U, T	**Calculated:** -	**Access level:** 3
Data type: Integer16	**Dynamic index:** -	**Func. diagram:** -
P-Group: Safety Integrated	**Units group:** -	**Unit selection:** -
Not for motor type: -	**Scaling:** -	**Expert list:** 1
Min	**Max**	**Factory setting**
0000 bin	1010 1100 bin	0000 bin

Description: Setting to select and de-select the user agreement on the Motor Module.

Value:
0: [00 hex] De-select user agreement
172: [AC hex] Select user agreement

Dependency: Refer to: r9741

r9741 SI Motion user agreement, inside the drive MM / SI Mtn UserAgr int

VECTOR_G

Can be changed: -	**Calculated:** -	**Access level:** 3
Data type: Integer16	**Dynamic index:** -	**Func. diagram:** 2822
P-Group: Safety Integrated	**Units group:** -	**Unit selection:** -
Not for motor type: -	**Scaling:** -	**Expert list:** 1
Min	**Max**	**Factory setting**
-	-	-

Description: Displays the internal state of the user agreement.

© Siemens AG 2012 All Rights Reserved

Value = 0: User agreement is not set.
Value = AC hex: User agreement is set.

Dependency: Refer to: p9740

r9744 SI message buffer changes, counter / SI msg_buffer chng

VECTOR_G

Can be changed: -	**Calculated:** -	**Access level:** 3
Data type: Unsigned16	**Dynamic index:** -	**Func. diagram:** -
P-Group: Messages	**Units group:** -	**Unit selection:** -
Not for motor type: -	**Scaling:** -	**Expert list:** 1
Min	**Max**	**Factory setting**
-	-	-

Description: Displays the changes of the safety message buffer. This counter is incremented every time that the safety message buffer changes.

Recommend.: This is used to check whether the safety message buffer has been read out consistently.

Dependency: Refer to: r9747, r9748, r9749, p9752, r9753, r9754, r9755, r9756

r9745[0...63] SI component number / SI comp_num

VECTOR_G

Can be changed: -	**Calculated:** -	**Access level:** 3
Data type: Unsigned32	**Dynamic index:** -	**Func. diagram:** -
P-Group: Messages	**Units group:** -	**Unit selection:** -
Not for motor type: -	**Scaling:** -	**Expert list:** 1
Min	**Max**	**Factory setting**
-	-	-

Description: Displays the component number of the safety message that has occurred.

Note: Value = 0: Assignment to a component not possible.

r9747[0...63] SI message code / SI msg_code

VECTOR_G

Can be changed: -	**Calculated:** -	**Access level:** 3
Data type: Unsigned16	**Dynamic index:** -	**Func. diagram:** -
P-Group: Messages	**Units group:** -	**Unit selection:** -
Not for motor type: -	**Scaling:** -	**Expert list:** 1
Min	**Max**	**Factory setting**
-	-	-

Description: Displays the numbers of safety messages that have occurred.

Dependency: Refer to: r9744, r9748, r9749, p9752, r9753, r9754, r9755, r9756

Note: The messages type "safety message" (Cxxxxx) are entered in the message fault buffer.

Message buffer structure (principle):

r9747[0], r9748[0], r9749[0], r9753[0], r9754[0], r9755[0], r9756[0] --> Actual message case, safety message 1

...

r9747[7], r9748[7], r9749[7], r9753[7], r9754[7], r9755[7], r9756[7] --> Actual message case, safety message 8

r9747[8], r9748[8], r9749[8], r9753[8], r9754[8], r9755[8], r9756[8] --> 1st acknowledged message case, safety message 1

...

r9747[15], r9748[15], r9749[15], r9753[15], r9754[15], r9755[15], r9756[15] --> 1st acknowledged message case, safety message 8

...

r9747[56], r9748[56], r9749[56], r9753[56], r9754[56], r9755[56], r9756[56] --> 7th acknowledged message case, safety message 1

...

r9747[63], r9748[63], r9749[63], r9753[63], r9754[63], r9755[63], r9756[63] --> 7th acknowledged message case, safety message 8

© Siemens AG 2012 All Rights Reserved

r9748[0...63] SI message time received in milliseconds / SI t_msg recv ms

VECTOR_G

Can be changed: -	**Calculated:** -	**Access level:** 3
Data type: Unsigned32	**Dynamic index:** -	**Func. diagram:** -
P-Group: Messages	**Units group:** -	**Unit selection:** -
Not for motor type: -	**Scaling:** -	**Expert list:** 1
Min	**Max**	**Factory setting**
- [ms]	- [ms]	- [ms]

Description: Displays the relative system runtime in milliseconds when the safety message occurred.

Dependency: Refer to: r9744, r9747, r9749, p9752, r9753, r9754, r9755, r9756

r9749[0...63] SI message value / SI msg_value

VECTOR_G

Can be changed: -	**Calculated:** -	**Access level:** 3
Data type: Integer32	**Dynamic index:** -	**Func. diagram:** -
P-Group: Messages	**Units group:** -	**Unit selection:** -
Not for motor type: -	**Scaling:** -	**Expert list:** 1
Min	**Max**	**Factory setting**
-	-	-

Description: Displays the additional information about the safety message that occurred (as integer number).

Dependency: Refer to: r9744, r9747, r9748, p9752, r9753, r9754, r9755, r9756

r9750[0...63] SI diagnostic attributes / SI diag_attr

VECTOR_G

Can be changed: -	**Calculated:** -	**Access level:** 3
Data type: Unsigned32	**Dynamic index:** -	**Func. diagram:** -
P-Group: Messages	**Units group:** -	**Unit selection:** -
Not for motor type: -	**Scaling:** -	**Expert list:** 1
Min	**Max**	**Factory setting**
-	-	-

Description: Displays the diagnostic attributes of the safety messages that have occurred.

Bit field:

Bit	Signal name	1 signal	0 signal	FP
00	Hardware replacement recommended	Yes	No	-

p9752 SI message cases, counter / SI msg_cases count

VECTOR_G

Can be changed: U, T	**Calculated:** -	**Access level:** 3
Data type: Unsigned16	**Dynamic index:** -	**Func. diagram:** -
P-Group: Messages	**Units group:** -	**Unit selection:** -
Not for motor type: -	**Scaling:** -	**Expert list:** 1
Min	**Max**	**Factory setting**
0	65535	0

Description: Number of safety messages that have occurred since the last reset.

Dependency: The safety message buffer is cleared by resetting the parameter to 0.
Refer to: r9744, r9747, r9748, r9749, r9753, r9754, r9755, r9756

Note: The parameter is reset to 0 at POWER ON.

r9753[0...63] SI message value for float values / SI msg_val float

VECTOR_G

Can be changed: -	**Calculated:** -	**Access level:** 3
Data type: FloatingPoint32	**Dynamic index:** -	**Func. diagram:** -
P-Group: Messages	**Units group:** -	**Unit selection:** -
Not for motor type: -	**Scaling:** -	**Expert list:** 1
Min	**Max**	**Factory setting**
-	-	-

Description: Displays additional information about the safety message that has occurred for float values.

© Siemens AG 2012 All Rights Reserved

Dependency: Refer to: r9744, r9747, r9748, r9749, p9752, r9754, r9755, r9756

r9754[0...63] SI message time received in days / SI t_msg recv days

VECTOR_G	**Can be changed:** -	**Calculated:** -	**Access level:** 3
	Data type: Unsigned16	**Dynamic index:** -	**Func. diagram:** -
	P-Group: Messages	**Units group:** -	**Unit selection:** -
	Not for motor type: -	**Scaling:** -	**Expert list:** 1
	Min	**Max**	**Factory setting**
	-	-	-

Description: Displays the relative system runtime in days when the safety message occurred.
Dependency: Refer to: r9744, r9747, r9748, r9749, p9752, r9753, r9755, r9756

r9755[0...63] SI message time removed in milliseconds / SI t_msg rem ms

VECTOR_G	**Can be changed:** -	**Calculated:** -	**Access level:** 3
	Data type: Unsigned32	**Dynamic index:** -	**Func. diagram:** -
	P-Group: Messages	**Units group:** -	**Unit selection:** -
	Not for motor type: -	**Scaling:** -	**Expert list:** 1
	Min	**Max**	**Factory setting**
	- [ms]	- [ms]	- [ms]

Description: Displays the relative system runtime in milliseconds when the safety message was removed.
Dependency: Refer to: r9744, r9747, r9748, r9749, p9752, r9753, r9754, r9756

r9756[0...63] SI message time removed in days / SI t_msg rem days

VECTOR_G	**Can be changed:** -	**Calculated:** -	**Access level:** 3
	Data type: Unsigned16	**Dynamic index:** -	**Func. diagram:** -
	P-Group: Messages	**Units group:** -	**Unit selection:** -
	Not for motor type: -	**Scaling:** -	**Expert list:** 1
	Min	**Max**	**Factory setting**
	-	-	-

Description: Displays the relative system runtime in days when the safety message was removed.
Dependency: Refer to: r9744, r9747, r9748, r9749, p9752, r9753, r9754, r9755

p9761 SI password input / SI password inp

VECTOR_G	**Can be changed:** C1, T	**Calculated:** -	**Access level:** 3
	Data type: Unsigned32	**Dynamic index:** -	**Func. diagram:** 2800
	P-Group: Safety Integrated	**Units group:** -	**Unit selection:** -
	Not for motor type: -	**Scaling:** -	**Expert list:** 1
	Min	**Max**	**Factory setting**
	0000 hex	FFFF FFFF hex	0000 hex

Description: Enters the Safety Integrated password.
Dependency: Refer to: F01659
Note: It is not possible to change Safety Integrated parameters until the Safety Integrated password has been entered.

p9762 SI password new / SI password new

VECTOR_G	**Can be changed:** C2(95)	**Calculated:** -	**Access level:** 3
	Data type: Unsigned32	**Dynamic index:** -	**Func. diagram:** 2800
	P-Group: Safety Integrated	**Units group:** -	**Unit selection:** -
	Not for motor type: -	**Scaling:** -	**Expert list:** 1
	Min	**Max**	**Factory setting**
	0000 hex	FFFF FFFF hex	0000 hex

Description: Enters a new Safety Integrated password.

© Siemens AG 2012 All Rights Reserved

Dependency: A change made to the Safety Integrated password must be acknowledged in the following parameter:
Refer to: p9763

p9763 SI password acknowledgement / SI ackn password

VECTOR_G

Can be changed: C2(95)	**Calculated:** -	**Access level:** 3
Data type: Unsigned32	**Dynamic index:** -	**Func. diagram:** 2800
P-Group: Safety Integrated	**Units group:** -	**Unit selection:** -
Not for motor type: -	**Scaling:** -	**Expert list:** 1
Min	**Max**	**Factory setting**
0000 hex	FFFF FFFF hex	0000 hex

Description: Acknowledges the new Safety Integrated password.

Dependency: Refer to: p9762

Note: The new password entered into p9762 must be re-entered in order to acknowledge.
p9762 = p9763 = 0 is automatically set after the new Safety Integrated password has been successfully acknowledged.

r9765 SI Motion forced check procedure remaining time (Control Unit) / SI Mtn dyn remain

VECTOR_G

Can be changed: -	**Calculated:** -	**Access level:** 3
Data type: FloatingPoint32	**Dynamic index:** -	**Func. diagram:** -
P-Group: Safety Integrated	**Units group:** -	**Unit selection:** -
Not for motor type: -	**Scaling:** -	**Expert list:** 1
Min	**Max**	**Factory setting**
- [h]	- [h]	- [h]

Description: Displays the time remaining until the next dynamization and testing of the safety motion monitoring functions integrated in the drives.
The signal source to initiate the forced checking procedure is parameterized in p9705.

Dependency: Refer to: p9705
Refer to: C01798

r9768[0...7] SI PROFIsafe receive control words (Control Unit) / SI Ps PZD recv CU

VECTOR_G

Can be changed: -	**Calculated:** -	**Access level:** 3
Data type: Unsigned16	**Dynamic index:** -	**Func. diagram:** -
P-Group: Safety Integrated	**Units group:** -	**Unit selection:** -
Not for motor type: -	**Scaling:** -	**Expert list:** 1
Min	**Max**	**Factory setting**
-	-	-

Description: Displays the received PROFIsafe telegram on the Control Unit.

Index:
[0] = PZD 1
[1] = PZD 2
[2] = PZD 3
[3] = PZD 4
[4] = PZD 5
[5] = PZD 6
[6] = PZD 7
[7] = PZD 8

Dependency: Refer to: r9769

Note: The PROFIsafe trailer at the end of the telegram is also displayed (2 words).

© Siemens AG 2012 All Rights Reserved

r9769[0...7] SI PROFIsafe send status words (Control Unit) / SI Ps PZD send CU

VECTOR_G

Can be changed: -	**Calculated:** -	**Access level:** 3
Data type: Unsigned16	**Dynamic index:** -	**Func. diagram:** -
P-Group: Safety Integrated	**Units group:** -	**Unit selection:** -
Not for motor type: -	**Scaling:** -	**Expert list:** 1
Min	**Max**	**Factory setting**
-	-	-

Description: Displays the PROFIsafe telegram to be sent on the Control Unit.

Index:
[0] = PZD 1
[1] = PZD 2
[2] = PZD 3
[3] = PZD 4
[4] = PZD 5
[5] = PZD 6
[6] = PZD 7
[7] = PZD 8

Dependency: Refer to: r9768

Note: The PROFIsafe trailer at the end of the telegram is also displayed (2 words).

r9770[0...3] SI version drive-integrated safety function (Control Unit) / SI version Drv CU

VECTOR_G

Can be changed: -	**Calculated:** -	**Access level:** 3
Data type: Unsigned16	**Dynamic index:** -	**Func. diagram:** 2802
P-Group: Safety Integrated	**Units group:** -	**Unit selection:** -
Not for motor type: -	**Scaling:** -	**Expert list:** 1
Min	**Max**	**Factory setting**
-	-	-

Description: Displays the Safety Integrated version for the drive-integrated safety functions on the Control Unit.

Index:
[0] = Safety Version (major release)
[1] = Safety Version (minor release)
[2] = Safety Version (baselevel or patch)
[3] = Safety Version (hotfix)

Dependency: Refer to: r9870, r9890

Note: Example:
r9770[0] = 2, r9770[1] = 60, r9770[2] = 1, r9770[3] = 0 --> Safety version V02.60.01.00

r9771 SI common functions (Control Unit) / SI common fct CU

VECTOR_G

Can be changed: -	**Calculated:** -	**Access level:** 3
Data type: Unsigned32	**Dynamic index:** -	**Func. diagram:** 2804
P-Group: Safety Integrated	**Units group:** -	**Unit selection:** -
Not for motor type: -	**Scaling:** -	**Expert list:** 1
Min	**Max**	**Factory setting**
-	-	-

Description: Displays the Safety Integrated monitoring functions supported on the Control Unit and Motor Module.
The Control Unit determines this display.

Bit field:

Bit	Signal name	1 signal	0 signal	FP
00	STO supported via terminals	Yes	No	2804
01	SBC supported	Yes	No	2804
02	Extended Functions supported (p9501 > 0)	Yes	No	2804
03	SS1 supported	Yes	No	2804
04	Extended Functions PROFIsafe supported	Yes	No	-
05	Extended Functions integrated in drive supported (p9601.2 = 1)	Yes	No	-
06	Basic Functions PROFIsafe supported	Yes	No	-
07	Extended Functions encoderless supported	Yes	No	-
08	Safe Brake Adapter supported	Yes	No	-

© Siemens AG 2012 All Rights Reserved

09	Basic Functions PROFIsafe for parallel connection supported	Yes	No	-
10	Extended Functions integrated in drive for parallel connection	Yes	No	-
11	Extended Functions SDI supported	Yes	No	-
12	Extended Functions SSM encoderless supported	Yes	No	-
13	ESR delay of the pulse suppression	Yes	No	-
14	SBC for parallel connection supported	Yes	No	-
15	SLS limit, SP supported via PROFIsafe	Yes	No	-
16	Safety functions w/out selection, SLP, SS1 supported w/out OFF3	Yes	No	-

Dependency: Refer to: r9871

Note: CU: Control Unit

SBC: Safe Brake Control

SDI: Safe Direction (safe motion direction)

SLP: Safely-Limited Position

SI: Safety Integrated

SP: Safe Position

SS1: Safe Stop 1

STO: Safe Torque Off / SH: Safe standstill

SSM: Safe Speed Monitor (safety-relevant feedback signal from the velocity monitoring) / SGA n < nx: Safety-related output n < nx

ESR: Extended Stop and Retract

r9772.0...23 CO/BO: SI status (Control Unit) / SI status CU

VECTOR_G

Can be changed: -	**Calculated:** -	**Access level:** 2
Data type: Unsigned32	**Dynamic index:** -	**Func. diagram:** 2804
P-Group: Safety Integrated	**Units group:** -	**Unit selection:** -
Not for motor type: -	**Scaling:** -	**Expert list:** 1
Min	**Max**	**Factory setting**
-	-	-

Description: Displays the Safety Integrated status on the Control Unit.

Bit field:

Bit	Signal name	1 signal	0 signal	FP
00	STO or safe pulse cancellation on CU selected	Yes	No	2810
01	STO or safe pulse cancellation on CU active	Yes	No	2810
02	SS1 delay time active on the Control Unit	Yes	No	2810
04	SBC requested	Yes	No	2814
05	SS1 selected on the Control Unit (Basic Functions)	Yes	No	-
06	SS1 active on the Control Unit (Basic Functions)	Yes	No	-
09	STOP A cannot be acknowledged, active	Yes	No	2802
10	STOP A active	Yes	No	2802
15	STOP F active	Yes	No	2802
16	STO cause: Safety comm. mode	Yes	No	-
17	STO cause selection via terminal (Basic Functions)	Yes	No	-
18	STO cause selection via Safe Motion Monitoring (SMM)	Yes	No	-
19	STO cause actual value missing or safe pulse cancellation	Yes	No	-
20	STO cause selection PROFIsafe (Basic Functions)	Yes	No	-
22	SS1 cause selection terminal (Basic Functions)	Yes	No	-
23	SS1 cause selection PROFIsafe (Basic Functions)	Yes	No	-

© Siemens AG 2012 All Rights Reserved

Dependency: Refer to: r9872

Note: Re bit 00:
When STO or "Safe pulse cancellation" is selected, the cause is displayed in bits 16 ... 20.
Re bit 01:
- For p9772.1 = 1 and p9772.19 = 0, an STO from the Safety Basic functions is active.
- For p9772.1 = 1 and p9772.19 = 1, safe pulse cancellation is active, if safety functions without selection are activated via p9601.2/p9801.2 = 1 and p9601.5/p9801.5 = 1.
Note:
If p9601.0 = 1 and p9601.2 = 1 and p9801.5 = 1 then for bit 0 and 1, the STO function applies.
Re bit 05:
When SS1 is selected, the cause is displayed in bits 22 and 23.
Re bit 18:
When the bit is set, STO is selected via PROFIsafe or Terminal Module 54F (TM54F).
Re bit 19:
With SMM encoderless no actual value sensing is possible on account of OFF2.
With SMM with encoder no actual value sensing is possible on account of parking.
For Safety functions without selection, safe pulse cancellation to selected (p9772.19 = 1).
SMM: Safe Motion Monitoring
Re bit 22 and 23:
These bits show via which path the SS1 has been triggered, i.e. what has started the SS1 delay time.
If the SS1 delay time is not started (e.g. because an STO is triggered at the same time), neither of the two bits is set.

r9773.0...31 CO/BO: SI status (Control Unit + Motor Module) / SI status CU+MM

VECTOR_G

Can be changed: -	**Calculated:** -	**Access level:** 2
Data type: Unsigned32	**Dynamic index:** -	**Func. diagram:** 2804
P-Group: Safety Integrated	**Units group:** -	**Unit selection:** -
Not for motor type: -	**Scaling:** -	**Expert list:** 1
Min	**Max**	**Factory setting**
-	-	-

Description: Displays the Safety Integrated status on the drive (Control Unit + Motor Module).

Bit field:

Bit	Signal name	1 signal	0 signal	FP
00	STO selected in drive	Yes	No	2804
01	STO active in drive	Yes	No	2804
02	SS1 delay time active in the drive	Yes	No	2804
04	SBC requested	Yes	No	2804
05	SS1 selected in the drive (Basic Functions)	Yes	No	-
06	SS1 active in the drive (Basic Functions)	Yes	No	-
31	Shutdown paths must be tested	Yes	No	2810

Note: This status is formed from the AND operation of the relevant status of the two monitoring channels.

r9774.0...31 CO/BO: SI status (group STO) / SI stat group STO

VECTOR_G

Can be changed: -	**Calculated:** -	**Access level:** 2
Data type: Unsigned32	**Dynamic index:** -	**Func. diagram:** 2804
P-Group: Safety Integrated	**Units group:** -	**Unit selection:** -
Not for motor type: -	**Scaling:** -	**Expert list:** 1
Min	**Max**	**Factory setting**
-	-	-

Description: Displays the status for Safety Integrated of the group to which this drive belongs.
These signals are an AND logic operation of the individual status signals of the drives included in this group.

Bit field:

Bit	Signal name	1 signal	0 signal	FP
00	STO selected in group	Yes	No	2804
01	STO active in group	Yes	No	2804
02	SS1 delay time active in group	Yes	No	-

© Siemens AG 2012 All Rights Reserved

04	SBC requested in group	Yes	No	2804
05	SS1 selected in group (Basic Functions)	Yes	No	-
06	SS1 active in group (Basic Functions)	Yes	No	-
31	Shutdown paths of the group must be tested	Yes	No	2804

Dependency: Refer to: p9620, r9773

Notice: If a drive belonging to a group is de-activated via p0105, then the signals in r9774 can no longer be correctly displayed (Remedy: Before de-activating, remove this drive from the group).

Note: A group is formed by appropriately grouping the terminals for the function "Safe Torque Off" (STO).

The status of a group of n drives is, for drives 1 to n - 1 displayed with a delay of one monitoring clock cycle; this is a system-related effect.

r9776 SI diagnostics / SI diagnostics

VECTOR_G

Can be changed: -	**Calculated:** -	**Access level:** 4
Data type: Unsigned32	**Dynamic index:** -	**Func. diagram:** -
P-Group: Safety Integrated	**Units group:** -	**Unit selection:** -
Not for motor type: -	**Scaling:** -	**Expert list:** 1
Min	**Max**	**Factory setting**
-	-	-

Description: The parameter is used for diagnostics.

Bit field:

Bit	Signal name	1 signal	0 signal	FP
00	Safety parameter changed POWER ON required	Yes	No	-

Note: Re bit 00 = 1:

At least one Safety parameter has been changed that will only take effect after a POWER ON.

r9780 SI monitoring clock cycle (Control Unit) / SI monitor_clck CU

VECTOR_G

Can be changed: -	**Calculated:** -	**Access level:** 3
Data type: FloatingPoint32	**Dynamic index:** -	**Func. diagram:** 2802
P-Group: Safety Integrated	**Units group:** -	**Unit selection:** -
Not for motor type: -	**Scaling:** -	**Expert list:** 1
Min	**Max**	**Factory setting**
- [ms]	- [ms]	- [ms]

Description: Displays the clock cycle time for the Safety Integrated Basic Functions on the Control Unit.

Dependency: Refer to: r0110, p0115, r9880

r9781[0...1] SI checksum to check changes (Control Unit) / SI chg chksm CU

CU_G130_DP, CU_G130_PN, CU_G150_DP, CU_G150_PN

Can be changed: -	**Calculated:** -	**Access level:** 3
Data type: Unsigned32	**Dynamic index:** -	**Func. diagram:** -
P-Group: Safety Integrated	**Units group:** -	**Unit selection:** -
Not for motor type: -	**Scaling:** -	**Expert list:** 1
Min	**Max**	**Factory setting**
-	-	-

Description: Displays the checksum for tracking changes for Safety Integrated.

These are additional checksums that are created to track changes (fingerprint for the "safety logbook" functionality) to safety parameters (that are relevant for checksums).

Index: [0] = SI checksum to track functional changes
[1] = SI checksum to track hardware-specific changes

Dependency: Refer to: p9601, p9729, p9799

Refer to: F01690

© Siemens AG 2012 All Rights Reserved

r9782[0...1] SI time stamps to check changes (Control Unit) / SI chg t CU

CU_G130_DP, CU_G130_PN, CU_G150_DP, CU_G150_PN	**Can be changed:** -	**Calculated:** -	**Access level:** 3
	Data type: FloatingPoint32	**Dynamic index:** -	**Func. diagram:** -
	P-Group: Safety Integrated	**Units group:** -	**Unit selection:** -
	Not for motor type: -	**Scaling:** -	**Expert list:** 1
	Min	**Max**	**Factory setting**
	- [h]	- [h]	- [h]

Description: Displays the time stamps for the checksums for tracking changes for Safety Integrated.
The time stamps for the checksums for tracking changes (fingerprint for the "safety logbook" functionality) made to safety parameters are saved in parameters p9781[0] and p9781[1].

Index: [0] = SI time stamp for checksum to track functional changes
[1] = SI time stamp for checksum to track hardware-specific changes

Dependency: Refer to: p9601, p9729, p9799
Refer to: F01690

p9783 SI motion synchr. motor current injection sensorless / SI Mtn SM Id sl

VECTOR_G (n/M)	**Can be changed:** U, T	**Calculated:** -	**Access level:** 3
	Data type: FloatingPoint32	**Dynamic index:** -	**Func. diagram:** -
	P-Group: Safety Integrated	**Units group:** -	**Unit selection:** -
	Not for motor type: -	**Scaling:** -	**Expert list:** 1
	Min	**Max**	**Factory setting**
	-50.00 [%]	0.00 [%]	-20.00 [%]

Description: Sets the field-generating current for sensorless actual value sensing of synchronous motors.
For synchronous motors, this current is fed in using sensorless safety functions.
The value must fulfill the following condition: |p0305 x p9783| >= p9588 x 1.2

Dependency: Refer to: p9588
Refer to: C01711

Notice: Reducing this percentage value can adversely affect actual value sensing with synchronous motors.
If the value is increased, this results in an increased motor power loss.

Note: This parameter is only effective for encoderless actual value sensing (p9506/p9306 = 1, 3).

r9784[0...1] SI Motion diagnostics acceleration encoderless / SI Mtn diag a sl

VECTOR_G	**Can be changed:** -	**Calculated:** -	**Access level:** 3
	Data type: FloatingPoint32	**Dynamic index:** -	**Func. diagram:** -
	P-Group: Safety Integrated	**Units group:** -	**Unit selection:** -
	Not for motor type: -	**Scaling:** -	**Expert list:** 1
	Min	**Max**	**Factory setting**
	- [mm/s²]	- [mm/s²]	- [mm/s²]

Description: Display to diagnose acceleration values of the encoderless actual values sensing.
Re index 0:
Shows the parameterized acceleration values of p9389/p9589.
Re index 1:
Shows the actually measured acceleration values of the encoderless actual value sensing

Index: [0] = Setpoint acceleration value
[1] = Actual acceleration value

Dependency: Refer to: p9389, p9589

© Siemens AG 2012 All Rights Reserved

r9784[0...1] SI Motion diagnostics acceleration encoderless / SI Mtn diag a sl

VECTOR_G (Safety rot)

Can be changed: -	**Calculated:** -	**Access level:** 3
Data type: FloatingPoint32	**Dynamic index:** -	**Func. diagram:** -
P-Group: Safety Integrated	**Units group:** -	**Unit selection:** -
Not for motor type: -	**Scaling:** -	**Expert list:** 1
Min	**Max**	**Factory setting**
- [rev/s²]	- [rev/s²]	- [rev/s²]

Description: Display to diagnose acceleration values of the encoderless actual values sensing.
Re index 0:
Shows the parameterized acceleration values of p9389/p9589.
Re index 1:
Shows the actually measured acceleration values of the encoderless actual value sensing

Index: [0] = Setpoint acceleration value
[1] = Actual acceleration value

Dependency: Refer to: p9389, p9589

r9785[0...1] SI Motion diagnostics absolute current value encoderless / SI Mtn diag I sl

VECTOR_G

Can be changed: -	**Calculated:** -	**Access level:** 3
Data type: FloatingPoint32	**Dynamic index:** -	**Func. diagram:** -
P-Group: Safety Integrated	**Units group:** 6_3	**Unit selection:** p0505
Not for motor type: -	**Scaling:** -	**Expert list:** 1
Min	**Max**	**Factory setting**
- [mA]	- [mA]	- [mA]

Description: Display to diagnose currents of the encoderless actual value sensing.
Re index 0:
Shows the parameterized minimum current of p9388/p9588.
Re index 1:
Shows the actually measured current of the encoderless actual value sensing

Index: [0] = Minimum current parameterized
[1] = Minimum current measured

Dependency: Refer to: p9388, p9588

r9786[0...2] SI Motion diagnostics plausibility angle value encoderless / SI mtn diag phi sl

VECTOR_G

Can be changed: -	**Calculated:** -	**Access level:** 3
Data type: FloatingPoint32	**Dynamic index:** -	**Func. diagram:** -
P-Group: Safety Integrated	**Units group:** -	**Unit selection:** -
Not for motor type: -	**Scaling:** -	**Expert list:** 1
Min	**Max**	**Factory setting**
- [°]	- [°]	- [°]

Description: Display to diagnose the plausibility angle of the encoderless actual value sensing.
Re index 0:
Shows the actual plausibility angle
Re index 1:
Shows the actual plausibility voltage angle
Re index 2:
Shows the actual current angle

Index: [0] = Actual plausibility angle
[1] = Actual voltage angle
[2] = Actual current angle

Dependency: Refer to: p9385, p9585

© Siemens AG 2012 All Rights Reserved

r9787 SI Motion possible error tolerance sensorless / SI Mtn poss tol sl

VECTOR_G

Can be changed: -	**Calculated:** -	**Access level:** 3
Data type: FloatingPoint32	**Dynamic index:** -	**Func. diagram:** -
P-Group: Safety Integrated	**Units group:** -	**Unit selection:** -
Not for motor type: -	**Scaling:** -	**Expert list:** 1
Min	**Max**	**Factory setting**
- [mm/min]	- [mm/min]	- [mm/min]

Description: Displays the actual velocity deviation of the encoderless actual value sensing that is obtained when setting p9585/p9385.

Dependency: Refer to: p9385, p9585

Note: For linear axes, the following unit applies: millimeters per minute
For rotary axes, the following unit applies: revolutions per minute

r9787 SI Motion possible error tolerance sensorless / SI Mtn poss tol sl

VECTOR_G (Safety rot)

Can be changed: -	**Calculated:** -	**Access level:** 3
Data type: FloatingPoint32	**Dynamic index:** -	**Func. diagram:** -
P-Group: Safety Integrated	**Units group:** -	**Unit selection:** -
Not for motor type: -	**Scaling:** -	**Expert list:** 1
Min	**Max**	**Factory setting**
- [rpm]	- [rpm]	- [rpm]

Description: Displays the actual velocity deviation of the encoderless actual value sensing that is obtained when setting p9585/p9385.

Dependency: Refer to: p9385, p9585

Note: For linear axes, the following unit applies: millimeters per minute
For rotary axes, the following unit applies: revolutions per minute

r9794[0...19] SI crosswise comparison list (Control Unit) / SI CDC_list CU

VECTOR_G

Can be changed: -	**Calculated:** -	**Access level:** 3
Data type: Unsigned16	**Dynamic index:** -	**Func. diagram:** 2802
P-Group: Safety Integrated	**Units group:** -	**Unit selection:** -
Not for motor type: -	**Scaling:** -	**Expert list:** 1
Min	**Max**	**Factory setting**
-	-	-

Description: Displays the number of the data that are being presently compared crosswise on the Control Unit.
The content of the list of crosswise-compared data is dependent upon the particular application.

Dependency: Refer to: r9894

Note: Example:
r9794[0] = 1 (monitoring clock cycle)
r9794[1] = 2 (enable safety functions)
r9794[2] = 3 (F-DI changeover, tolerance time)
...
A complete list of numbers for crosswise-compared data items appears in fault F01611.

r9795 SI diagnostics STOP F (Control Unit) / SI diag STOP F CU

VECTOR_G

Can be changed: -	**Calculated:** -	**Access level:** 2
Data type: Unsigned32	**Dynamic index:** -	**Func. diagram:** 2802
P-Group: Safety Integrated	**Units group:** -	**Unit selection:** -
Not for motor type: -	**Scaling:** -	**Expert list:** 1
Min	**Max**	**Factory setting**
-	-	-

Description: Displays the number of the cross-compared data which has caused STOP F on the Control Unit.

© Siemens AG 2012 All Rights Reserved

Dependency: Refer to: r9895
Refer to: F01611

Note: A complete list of numbers for crosswise-compared data items appears in fault F01611.

r9798 SI actual checksum SI parameters (Control Unit) / SI act_checksum CU

VECTOR_G

Can be changed: -	**Calculated:** -	**Access level:** 3
Data type: Unsigned32	**Dynamic index:** -	**Func. diagram:** 2800
P-Group: Safety Integrated	**Units group:** -	**Unit selection:** -
Not for motor type: -	**Scaling:** -	**Expert list:** 1
Min	**Max**	**Factory setting**
-	-	-

Description: Displays the checksum over the checked Safety Integrated parameters on the Control Unit (actual checksum).

Dependency: Refer to: p9799, r9898

p9799 SI reference checksum SI parameters (Control Unit) / SI set_checksum CU

VECTOR_G

Can be changed: C2(95)	**Calculated:** -	**Access level:** 3
Data type: Unsigned32	**Dynamic index:** -	**Func. diagram:** 2800
P-Group: Safety Integrated	**Units group:** -	**Unit selection:** -
Not for motor type: -	**Scaling:** -	**Expert list:** 1
Min	**Max**	**Factory setting**
0000 hex	FFFF FFFF hex	0000 hex

Description: Sets the checksum for the checked Safety Integrated parameters on the Control Unit (reference checksum).

Dependency: Refer to: r9798, p9899

p9801 SI enable, functions integrated in the drive (Motor Module) / SI enable fct MM

VECTOR_G

Can be changed: C2(95)	**Calculated:** -	**Access level:** 3
Data type: Unsigned16	**Dynamic index:** -	**Func. diagram:** -
P-Group: Safety Integrated	**Units group:** -	**Unit selection:** -
Not for motor type: -	**Scaling:** -	**Expert list:** 1
Min	**Max**	**Factory setting**
-	-	0000 0000 bin

Description: Sets the enable signals for the safety functions integrated in the drive and the type of selection on the Motor Module.

Not all of the settings listed below will be permissible, depending on the Control Unit and Motor Module or Power Module being used:

0000 hex:

Safety functions integrated in the drive inhibited (no safety function).

0001 hex:

Basic functions are enabled via onboard terminals (permissible for r9871.0 = 1).

0004 hex:

Extended functions via Terminal Module 54F (TM54F) have been enabled (permissible for r9871.5 = 1).

0005 hex:

Extended functions via Terminal Module 54F (TM54F) and the basic functions via onboard terminals have been enabled (permissible for r9871.5 = 1).

0008 hex:

Basic functions are enabled via PROFIsafe (permissible for r9871.6 = 1).

0009 hex:

Basic functions are enabled via PROFIsafe onboard terminals (permissible for r9871.6 = 1).

000C hex:

Extended functions are enabled via PROFIsafe (permissible for r9871.4 = 1).

000D hex:

Extended functions are enabled via PROFIsafe and basic functions via onboard terminals (permissible for r9871.4 = 1).

© Siemens AG 2012 All Rights Reserved

0024 hex:

Extended functions without selection are enabled (permissible for r9871.16 = 1).

0025 hex:

Extended functions without selection and basic functions via onboard terminals are enabled (permissible for r9871.16 = 1).

Bit field:

Bit	Signal name	1 signal	0 signal	FP
00	STO (SH) via terminals (Motor Module) enable	Enable	Inhibit	2810
02	Enable drive_integr motion_monitoring functions (Motor Module)	Enable	Inhibit	-
03	PROFIsafe (Motor Module) enable	Enable	Inhibit	-
05	Enable drv_integ motion_mon fct w/o selection (Motor Module)	Enable	Inhibit	-

Dependency: Refer to: p9601, r9871

Notice: This parameter is overwritten by the copy function of the safety functions integrated in the drive.

Note: MM: Motor Module.

SI: Safety Integrated.

SMM: Safe Motion Monitoring.

STO: Safe Torque Off/SH: Safe standstill.

SS1: Safe Stop 1 (corresponds to Stop Category 1 acc. to EN60204).

F-DI: Failsafe Digital Input.

F-DO: Failsafe Digital Output.

A change always becomes effective only after a POWER ON. Exception: Changes to p9801.0 become effective immediately.

p9802 SI enable Safe Brake Control (Motor Module) / SI enable SBC MM

VECTOR_G

Can be changed: C2(95)	**Calculated:** -	**Access level:** 3
Data type: Integer32	**Dynamic index:** -	**Func. diagram:** 2814
P-Group: Safety Integrated	**Units group:** -	**Unit selection:** -
Not for motor type: -	**Scaling:** -	**Expert list:** 1
Min	**Max**	**Factory setting**
0	1	0

Description: Sets the enable signal for the "Safe Brake Control" function (SBC) on the Motor Module.

0: Inhibit SBC

1: Enable SBC

Dependency: Refer to: p9602

Notice: This parameter is overwritten by the copy function of the safety functions integrated in the drive.

Note: The "Safe Brake Control" function is not activated until at least one safety monitoring function has been enabled (i.e. p9501 not equal to 0 and/or p9801 not equal to 0).

It does not make sense to parameterize "no motor holding brake available" and enable "Safe Brake Control" (p1215 = 0, p9602 = p9802 = 1) if there is no motor holding brake.

The parameterization "motor holding brake the same as sequence control, connection via BICO" and "Safe Brake Control" enabled (p1215 = 3, p9602 = 1, p9802 = 1) is not practical.

It is not permissible to parameterize "motor holding brake without feedback signals" and also enable "safe brake control" (p1278 = 1, p9602 = 1, p9802 = 1).

MM: Motor Module

SBC: Safe Brake Control

SI: Safety Integrated

© Siemens AG 2012 All Rights Reserved

p9810 SI PROFIsafe address (Motor Module) / SI PROFIsafe MM

VECTOR_G

Can be changed: C2(95)	**Calculated:** -	**Access level:** 3
Data type: Unsigned16	**Dynamic index:** -	**Func. diagram:** -
P-Group: Safety Integrated	**Units group:** -	**Unit selection:** -
Not for motor type: -	**Scaling:** -	**Expert list:** 1
Min	**Max**	**Factory setting**
0000 hex	FFFE hex	0000 hex

Description: Sets the PROFIsafe address of the Motor Module.

Notice: This parameter is overwritten by the copy function of the safety functions integrated in the drive.

p9811 SI PROFIsafe telegram selection (Motor Module) / SI Ps telegram MM

VECTOR_G

Can be changed: C2(95)	**Calculated:** -	**Access level:** 3
Data type: Unsigned16	**Dynamic index:** -	**Func. diagram:** -
P-Group: Safety Integrated	**Units group:** -	**Unit selection:** -
Not for motor type: -	**Scaling:** -	**Expert list:** 1
Min	**Max**	**Factory setting**
0	998	998

Description: Sets the PROFIsafe telegram number for the Motor Module.

Value:
0: No PROFIsafe telegram selected
30: PROFIsafe standard telegram 30, PZD-1/1
31: PROFIsafe standard telegram 31, PZD-2/2
901: PROFIsafe SIEMENS telegram 901, PZD-3/5
902: PROFIsafe SIEMENS telegram 902, PZD-3/6
998: Compatibility mode (as for firmware version < 4.5)

Dependency: Refer to: p9611, p60022

Notice: This parameter is overwritten by the copy function of the safety functions integrated in the drive.

p9821 BI: SI Safe Brake Adapter signal source (Motor Module) / SI SBA S_src MM

VECTOR_G

Can be changed: C2(95)	**Calculated:** -	**Access level:** 3
Data type: Unsigned32 / Binary	**Dynamic index:** -	**Func. diagram:** 2814
P-Group: Safety Integrated	**Units group:** -	**Unit selection:** -
Not for motor type: -	**Scaling:** -	**Expert list:** 1
Min	**Max**	**Factory setting**
-	-	0

Description: Sets the signal source for Safe Brake Adapter (SBA).
This defines via which digital input the Safe Brake Adapter feedback signal is read-in (SBA_DIAG).
p9621/p9821 = 0:
There is no Safe Brake Control (SBC) with Safe Brake Adapter (SBA) available.
p9621/p9821 = r0722.x (x = 0, 1 ... 7)
Safe Brake Adapter and Booksize unit (no Communication Interface Module (CIM)).
p9621/p9821 = r9872.3
Safe Brake Adapter and Chassis unit (CIM).

Dependency: Refer to: p9601, p9602, p9621

Notice: This parameter is overwritten by the copy function of the safety functions integrated in the drive.

Note: No difference is tolerated for a crosswise data comparison between p9621 and p9821.
To use the "Safe Brake Adapter" function the following must apply:
p9601 = p9801 <> 0 and p9602 = p9802 = 1

© Siemens AG 2012 All Rights Reserved

p9822[0...1] SI SBA relay delay times (Motor Module) / SI SBA relay t MM

VECTOR_G	**Can be changed:** C2(95)	**Calculated:** -	**Access level:** 3
	Data type: FloatingPoint32	**Dynamic index:** -	**Func. diagram:** 2814
	P-Group: Safety Integrated	**Units group:** -	**Unit selection:** -
	Not for motor type: -	**Scaling:** -	**Expert list:** 1
	Min	**Max**	**Factory setting**
	0.00 [µs]	1000000.00 [µs]	[0] 100000.00 [µs] [1] 65000.00 [µs]

Description: Sets the delay times for activating and de-activating the Safe Brake Adapter relay.

The relay-specific minimum delay times for evaluating the feedback signal contacts have to be set. They differ for the activation and de-activation of one and the same relay.

Index: [0] = Wait time activation
[1] = Wait time deactivation

Dependency: Refer to: p9622

Notice: This parameter is overwritten by the copy function of the safety functions integrated in the drive.

p9850 SI SGE changeover tolerance time (Motor Module) / SI SGE_chg tol MM

VECTOR_G	**Can be changed:** C2(95)	**Calculated:** -	**Access level:** 3
	Data type: FloatingPoint32	**Dynamic index:** -	**Func. diagram:** 2810
	P-Group: Safety Integrated	**Units group:** -	**Unit selection:** -
	Not for motor type: -	**Scaling:** -	**Expert list:** 1
	Min	**Max**	**Factory setting**
	0.00 [µs]	2000000.00 [µs]	500000.00 [µs]

Description: Sets the tolerance time to change over the safety-related inputs (SGE) on the Motor Module.

An SGE changeover is not effective simultaneously due to the different runtimes in the two monitoring channels. After an SGE changeover, dynamic data is not subject to a crosswise data comparison during this tolerance time.

Dependency: Refer to: p9650

Notice: This parameter is overwritten by the copy function of the safety functions integrated in the drive.

Note: For a crosswise data comparison between p9650 and p9850, a difference of one Safety monitoring clock cycle is tolerated.

The parameterized time is rounded internally to an integer multiple of the monitoring clock cycle.

SGE: Safety-related input (e.g. STO terminals)

p9851 SI STO/SBC/SS1 debounce time (Motor Module) / SI STO t_debou MM

VECTOR_G	**Can be changed:** C2(95)	**Calculated:** -	**Access level:** 3
	Data type: FloatingPoint32	**Dynamic index:** -	**Func. diagram:** -
	P-Group: Safety Integrated	**Units group:** -	**Unit selection:** -
	Not for motor type: -	**Scaling:** -	**Expert list:** 1
	Min	**Max**	**Factory setting**
	0.00 [µs]	100000.00 [µs]	0.00 [µs]

Description: Sets the debounce time for the EP terminal of the Motor Module.

Notice: This parameter is overwritten by the copy function of the safety functions integrated in the drive.

Note: The debounce time is rounded to whole milliseconds. It specifies the maximum duration of a fault pulse at the fail-safe digital inputs with no reaction/influence on the selection or deselection of the Safety Basic Functions.

Example:

Debounce time = 1 ms: Fault pulses of 1 ms are filtered; only pulses longer than 2 ms are processed.

Debounce time = 3 ms: Fault pulses of 3 ms are filtered; only pulses longer than 4 ms are processed.

© Siemens AG 2012 All Rights Reserved

p9852 SI Safe Stop 1 delay time (Motor Module) / SI Stop 1 t_del MM

VECTOR_G	**Can be changed:** C2(95)	**Calculated:** -	**Access level:** 3
	Data type: FloatingPoint32	**Dynamic index:** -	**Func. diagram:** -
	P-Group: Safety Integrated	**Units group:** -	**Unit selection:** -
	Not for motor type: -	**Scaling:** -	**Expert list:** 1
	Min	**Max**	**Factory setting**
	0.00 [ms]	300000.00 [ms]	0.00 [ms]

Description: Sets the delay time of the pulse suppression for the function "Safe Stop 1" (SS1) on the Motor Module to brake along the OFF3 down ramp (p1135).

Recommend.: In order that the drive can completely ramp-down along the OFF3 ramp and a motor holding brake that is possibly available can close, then the delay time should be set as follows:

Motor holding brake parameterized: delay time >= p1135 + p1228 + p1217

Motor holding brake not parameterized: delay time >= p1135 + p1228

Dependency: Refer to: p1135, p9652

Notice: This parameter is overwritten by the copy function of the safety functions integrated in the drive.

Note: For a crosswise data comparison between p9652 and p9852, a difference of one Safety monitoring clock cycle is tolerated.

The parameterized time is rounded internally to an integer multiple of the monitoring clock cycle.

SS1: Safe Stop 1 (corresponds to Stop Category 1 acc. to EN60204)

p9858 SI transition time STOP F to STOP A (Control Unit) / SI STOP F->A MM

VECTOR_G	**Can be changed:** C2(95)	**Calculated:** -	**Access level:** 3
	Data type: FloatingPoint32	**Dynamic index:** -	**Func. diagram:** 2802
	P-Group: Safety Integrated	**Units group:** -	**Unit selection:** -
	Not for motor type: -	**Scaling:** -	**Expert list:** 1
	Min	**Max**	**Factory setting**
	0.00 [µs]	30000000.00 [µs]	0.00 [µs]

Description: Sets the transition period from STOP F to STOP A on the Motor Module.

Dependency: Refer to: p9658, r9895

Refer to: F30611

Notice: This parameter is overwritten by the copy function of the safety functions integrated in the drive.

Note: For a crosswise data comparison between p9658 and p9858, a difference of one Safety monitoring clock cycle is tolerated.

The parameterized time is rounded internally to an integer multiple of the monitoring clock cycle.

STOP F: Defect in a monitoring channel (error in the crosswise data comparison)

STOP A: Pulse suppression via the safety shutdown path

r9870[0...3] SI version drive-integrated safety function (Motor Module) / SI version MM

VECTOR_G	**Can be changed:** -	**Calculated:** -	**Access level:** 3
	Data type: Unsigned16	**Dynamic index:** -	**Func. diagram:** 2802
	P-Group: Safety Integrated	**Units group:** -	**Unit selection:** -
	Not for motor type: -	**Scaling:** -	**Expert list:** 1
	Min	**Max**	**Factory setting**
	-	-	-

Description: Displays the Safety Integrated version for the drive-integrated safety functions on the Motor Module.

Index:
[0] = Safety Version (major release)
[1] = Safety Version (minor release)
[2] = Safety Version (baselevel or patch)
[3] = Safety Version (hotfix)

Dependency: Refer to: r9770, r9890

Note: Example:

r9870[0] = 2, r9870[1] = 60, r9870[2] = 1, r9870[3] = 0 --> Safety version V02.60.01.00

© Siemens AG 2012 All Rights Reserved

r9871 SI common functions (Motor Module / SI general fct MM

VECTOR_G

Can be changed: -	**Calculated:** -	**Access level:** 3
Data type: Unsigned32	**Dynamic index:** -	**Func. diagram:** 2804
P-Group: Safety Integrated	**Units group:** -	**Unit selection:** -
Not for motor type: -	**Scaling:** -	**Expert list:** 1
Min	**Max**	**Factory setting**
-	-	-

Description: Displays the Safety Integrated monitoring functions supported on the Control Unit and Motor Module.
The Motor Module determines this display.

Bit field:

Bit	Signal name	1 signal	0 signal	FP
00	STO supported via terminals	Yes	No	2804
01	SBC supported	Yes	No	2804
02	Extended Functions supported (p9501 > 0)	Yes	No	2804
03	SS1 supported	Yes	No	2804
04	Extended Functions PROFIsafe supported	Yes	No	-
05	Extended Functions integrated in drive supported (p9601.2 = 1)	Yes	No	-
06	Basic Functions PROFIsafe supported	Yes	No	-
07	Extended Functions encoderless supported	Yes	No	-
08	Safe Brake Adapter supported	Yes	No	-
09	Basic Functions PROFIsafe for parallel connection supported	Yes	No	-
10	Extended Functions integrated in drive for parallel connection	Yes	No	-
11	Extended Functions SDI supported	Yes	No	-
12	Extended Functions SSM encoderless supported	Yes	No	-
13	ESR delay of the pulse suppression	Yes	No	-
14	SBC for parallel connection supported	Yes	No	-
15	SLS limit, SP supported via PROFIsafe	Yes	No	-
16	Safety functions w/out selection, SLP, SS1 supported w/out OFF3	Yes	No	-

Dependency: Refer to: r9771

Note: MM: Motor Module
SBC: Safe Brake Control
SDI: Safe Direction (safe motion direction)
SLP: Safely-Limited Position
SI: Safety Integrated
SP: Safe Position
SS1: Safe Stop 1
STO: Safe Torque Off / SH: Safe standstill
SSM: Safe Speed Monitor (safety-relevant feedback signal from the velocity monitoring) / SGA n < nx: Safety-related output n < nx
ESR: Extended Stop and Retract

r9872.0...24 CO/BO: SI status list (Motor Module) / SI status MM

VECTOR_G

Can be changed: -	**Calculated:** -	**Access level:** 2
Data type: Unsigned32	**Dynamic index:** -	**Func. diagram:** 2804
P-Group: Safety Integrated	**Units group:** -	**Unit selection:** -
Not for motor type: -	**Scaling:** -	**Expert list:** 1
Min	**Max**	**Factory setting**
-	-	-

Description: Displays the Safety Integrated status on the Motor Module.

© Siemens AG 2012 All Rights Reserved

Bit field:

Bit	Signal name	1 signal	0 signal	FP
00	STO on Motor Module selected	Yes	No	2810
01	STO on Motor Module active	Yes	No	2810
02	SS1 delay time on Motor Module active	Yes	No	2810
03	Safe Brake Adapter feedback signal	Yes	No	2814
04	SBC requested	Yes	No	2814
05	SS1 selected on the Motor Module (Basic Functions)	Yes	No	-
06	SS1 active on the Motor Module (Basic Functions)	Yes	No	-
09	STOP A cannot be acknowledged, active	Yes	No	2802
10	STOP A active	Yes	No	2802
15	STOP F active	Yes	No	2802
16	STO cause: Safety comm. mode	Yes	No	-
17	STO cause selection via terminal (Basic Functions)	Yes	No	-
18	STO cause: selection via SMM	Yes	No	-
20	STO cause selection PROFIsafe (Basic Functions)	Yes	No	-
22	SS1 cause selection terminal (Basic Functions)	Yes	No	-
23	SS1 cause selection PROFIsafe (Basic Functions)	Yes	No	-
24	Slave Motor Module ready for communication	Yes	No	-

Dependency: Refer to: r9772

Notice: If communication between the Control Unit and the Motor Module is interrupted (e.g. by switching off the Motor Module), this display parameter is no longer updated. The last transferred status of the Motor Module is displayed.

Note: Re bit 00:

When STO is selected, the cause is displayed in bits 16 ... 18 and in bit 20.

Re bit 05:

When SS1 is selected, the cause is displayed in bits 22 and 23.

Re bit 18:

When the bit is set, STO is selected via PROFIsafe or Terminal Module 54F (TM54F).

SMM: Safe Motion Monitoring

Re bit 22, 23:

These bits show via which path the SS1 was triggered, i.e. what has started the SS1 delay time.

If the SS1 delay time is not started (e.g. because an STO is triggered at the same time), neither of the two bits is set.

Re bit 24:

Only for parallel connection and active motion monitoring functions: Slave Motor Module ready for communication

r9880 SI monitoring clock cycle (Motor Module) / SI monitor_clck MM

VECTOR_G

Can be changed: -	**Calculated:** -	**Access level:** 3
Data type: FloatingPoint32	**Dynamic index:** -	**Func. diagram:** 2802
P-Group: Safety Integrated	**Units group:** -	**Unit selection:** -
Not for motor type: -	**Scaling:** -	**Expert list:** 1
Min	**Max**	**Factory setting**
- [ms]	- [ms]	- [ms]

Description: Displays the clock cycle time for the Safety Integrated Basic Functions on the Motor Module.

Dependency: Refer to: r0110, p0115, r9780

© Siemens AG 2012 All Rights Reserved

r9881[0...11] SI Motion Sensor Module Node Identifier second channel / SI Mtn SM Ident

VECTOR_G	**Can be changed:** -	**Calculated:** -	**Access level:** 3
	Data type: Unsigned8	**Dynamic index:** -	**Func. diagram:** -
	P-Group: Safety Integrated	**Units group:** -	**Unit selection:** -
	Not for motor type: -	**Scaling:** -	**Expert list:** 1
	Min	**Max**	**Factory setting**
	-	-	-

Description: Displays the Node Identifier of the Sensor Module that the second channel uses for the motion monitoring functions.

r9890[0...2] SI version (Sensor Module) / SI version SM

VECTOR_G	**Can be changed:** -	**Calculated:** -	**Access level:** 3
	Data type: Unsigned16	**Dynamic index:** -	**Func. diagram:** -
	P-Group: Safety Integrated	**Units group:** -	**Unit selection:** -
	Not for motor type: -	**Scaling:** -	**Expert list:** 1
	Min	**Max**	**Factory setting**
	-	-	-

Description: Displays the Safety Integrated version on the Sensor Module.

Index:
[0] = Safety Version (major release)
[1] = Safety Version (minor release)
[2] = Safety Version (baselevel or patch)

Dependency: Refer to: r9770, r9870

Note: Example:
r9890[0] = 2, r9890[1] = 3, r9890[2] = 1 --> Safety-Version V02.03.01

r9894[0...19] SI crosswise comparison list (Motor Module) / SI CDC_list MM

VECTOR_G	**Can be changed:** -	**Calculated:** -	**Access level:** 3
	Data type: Unsigned16	**Dynamic index:** -	**Func. diagram:** 2802
	P-Group: Safety Integrated	**Units group:** -	**Unit selection:** -
	Not for motor type: -	**Scaling:** -	**Expert list:** 1
	Min	**Max**	**Factory setting**
	-	-	-

Description: Displays the number of the data that are being presently compared crosswise on the Motor Module.
The content of the list of crosswise-compared data is dependent upon the particular application.

Dependency: Refer to: r9794

Note: Example:
r9894[0] = 1 (monitoring clock cycle)
r9894[1] = 2 (enable safety functions)
r9894[2] = 3 (F-DI changeover, tolerance time)
...
The complete list of numbers for crosswise data comparison is listed in Fault F30611.

r9895 SI diagnostics STOP F (Motor Module) / SI diag STOP F MM

VECTOR_G	**Can be changed:** -	**Calculated:** -	**Access level:** 2
	Data type: Unsigned32	**Dynamic index:** -	**Func. diagram:** 2802
	P-Group: Safety Integrated	**Units group:** -	**Unit selection:** -
	Not for motor type: -	**Scaling:** -	**Expert list:** 1
	Min	**Max**	**Factory setting**
	-	-	-

Description: Displays the number of the cross-compared data which has caused STOP F on the Motor Module.

Dependency: Refer to: r9795
Refer to: F30611

© Siemens AG 2012 All Rights Reserved

Note: The complete list of numbers for crosswise data comparison is listed in Fault F30611.

p9897 SI Motion pulse suppression failsafe delay time (MM) / SI Mtn IL t_del MM

VECTOR_G

Can be changed: C2(95)	**Calculated:** -	**Access level:** 3
Data type: FloatingPoint32	**Dynamic index:** -	**Func. diagram:** -
P-Group: Safety Integrated	**Units group:** -	**Unit selection:** -
Not for motor type: -	**Scaling:** -	**Expert list:** 1
Min	**Max**	**Factory setting**
0.00 [µs]	800000.00 [µs]	0.00 [µs]

Description: Sets the delay time for the pulse suppression after bus failure via failsafe values on the Motor Module (e.g. used for ESR).

Notice: This parameter is overwritten by the copy function of the safety functions integrated in the drive.

Note: ESR: Extended Stop and Retract

r9898 SI actual checksum SI parameters (Motor Module) / SI act_checksum MM

VECTOR_G

Can be changed: -	**Calculated:** -	**Access level:** 3
Data type: Unsigned32	**Dynamic index:** -	**Func. diagram:** 2800
P-Group: Safety Integrated	**Units group:** -	**Unit selection:** -
Not for motor type: -	**Scaling:** -	**Expert list:** 1
Min	**Max**	**Factory setting**
-	-	-

Description: Displays the checksum for the checked Safety Integrated parameters on the Motor Module (actual checksum).

Dependency: Refer to: r9798, p9899

p9899 SI reference checksum SI parameters (Motor Module) / SI set_checksum MM

VECTOR_G

Can be changed: C2(95)	**Calculated:** -	**Access level:** 3
Data type: Unsigned32	**Dynamic index:** -	**Func. diagram:** 2800
P-Group: Safety Integrated	**Units group:** -	**Unit selection:** -
Not for motor type: -	**Scaling:** -	**Expert list:** 1
Min	**Max**	**Factory setting**
0000 hex	FFFF FFFF hex	0000 hex

Description: Sets the checksum for the checked Safety Integrated parameters on the Motor Module (reference checksum).

Dependency: Refer to: p9799, r9898

r9900 Actual topology number of indices / Act topo indices

CU_G130_DP, CU_G130_PN, CU_G150_DP, CU_G150_PN

Can be changed: -	**Calculated:** -	**Access level:** 3
Data type: Unsigned16	**Dynamic index:** -	**Func. diagram:** -
P-Group: Topology	**Units group:** -	**Unit selection:** -
Not for motor type: -	**Scaling:** -	**Expert list:** 0
Min	**Max**	**Factory setting**
-	-	-

Description: Displays the number of indices of the actual topology.

Dependency: Refer to: r9901

Note: Only for internal Siemens use.
The parameter is not displayed for the STARTER commissioning software.

© Siemens AG 2012 All Rights Reserved

r9901[0...n] Actual topology / Act topo

CU_G130_DP, CU_G130_PN, CU_G150_DP, CU_G150_PN	**Can be changed:** -	**Calculated:** -	**Access level:** 3
	Data type: Unsigned16	**Dynamic index:** r9900	**Func. diagram:** -
	P-Group: Topology	**Units group:** -	**Unit selection:** -
	Not for motor type: -	**Scaling:** -	**Expert list:** 0
	Min	**Max**	**Factory setting**
	-	-	-

Description:
Displays the actual topology of the drive unit.
The actual topology is sub-divided into several sections. Each of the following data is saved under an index.
General data on the topology:
- version
- attribute to compare the actual topology and target topology
- number of components
Data on a component:
- type component of the node ID of the component
- number of DRIVE-CLiQ sockets in the Node Identifier
- manufacturer and version of the Node Identifier
- serial number of the Node Identifier (4 indices)
- index of the component
- order number (8 indices)
- attribute to compare the actual topology and target topology of the component
- communications address
- number of port types
- port type
- number of ports of the port type
- communications address of the associated/linked component
- number of the associated/linked port
- communications address of the associated/linked component
- number of the associated port, etc.
Data on the next component:
- etc.

Dependency:
Refer to: r9900

Note:
Only for internal Siemens use.
The parameter is not displayed for the STARTER commissioning software.

p9902 Target topology number of indices / TargetTopo indices

CU_G130_DP, CU_G130_PN, CU_G150_DP, CU_G150_PN	**Can be changed:** -	**Calculated:** -	**Access level:** 3
	Data type: Unsigned16	**Dynamic index:** -	**Func. diagram:** -
	P-Group: Topology	**Units group:** -	**Unit selection:** -
	Not for motor type: -	**Scaling:** -	**Expert list:** 0
	Min	**Max**	**Factory setting**
	1	65535	1

Description:
Sets the number of target topology indices.

Dependency:
Refer to: p9903

Note:
Only for internal Siemens use.
The parameter is not displayed for the STARTER commissioning software.

© Siemens AG 2012 All Rights Reserved

p9903[0...n] Target topology / Target topo

CU_G130_DP, CU_G130_PN, CU_G150_DP, CU_G150_PN

Can be changed: -	**Calculated:** -	**Access level:** 3
Data type: Unsigned16	**Dynamic index:** p9902	**Func. diagram:** -
P-Group: Topology	**Units group:** -	**Unit selection:** -
Not for motor type: -	**Scaling:** -	**Expert list:** 0
Min	**Max**	**Factory setting**
0000 hex	FFFF hex	0000 hex

Description:
Sets the target topology of the drive unit.
The target topology is sub-divided into several sections. Each of the following data is saved under an index.
General data on the topology:
- version
- attribute to compare the actual topology and target topology
- number of components
Data on a component:
- type component of the Node Identifier of the component
- number of DRIVE-CLiQ sockets in the Node Identifier
- manufacturer and version of the Node Identifier
- serial number of the Node Identifier (4 indices)
- index of the component
- order number (8 indices)
- attribute to compare the actual topology and target topology of the component
- component number
- number of port types
- port type
- number of ports of the port type
- component number of the associated/linked component
- number of the associated/linked port
- component number of the associated/linked component
- number of the associated port, etc.
Data on the next component:
- etc.

Dependency:
Refer to: p9902

Note:
The target topology can only be modified using the commissioning software.
The parameter is not displayed for the STARTER commissioning software.
Changes only become effective when the state of p0009 = 101 changes to 0 or 111.

p9904 Topology comparison, acknowledge differences / Topo_compare ackn

CU_G130_DP, CU_G130_PN, CU_G150_DP, CU_G150_PN

Can be changed: C1(1)	**Calculated:** -	**Access level:** 3
Data type: Unsigned32	**Dynamic index:** -	**Func. diagram:** -
P-Group: Topology	**Units group:** -	**Unit selection:** -
Not for motor type: -	**Scaling:** -	**Expert list:** 1
Min	**Max**	**Factory setting**
0000 hex	FFFF FFFF hex	0000 hex

Description:
If, when comparing the actual topology and target topology, only error has occurred, that can be acknowledged, then using this parameter, a new comparison can be started - acknowledging the error in the target topology.
Differences that can be acknowledged:
- topology comparison, component shifted
- topology comparison, serial number of a component has been detected to be different (byte 3 = 1)
- topology comparison shows one component that is connected differently

© Siemens AG 2012 All Rights Reserved

The following parameter values are available:
p9904 = 1 --> the procedure is started.
p9904 = 0 after starting --> the procedure has been successfully completed.
p9904 = 1 after starting --> the procedure has not been successfully completed.
The possible causes for an unsuccessful procedure are located in bytes 4, 3, 2.
Byte 2:
Number of structural differences.
Byte 3:
Number of differences that can be acknowledged (p9904).
Byte 4:
Number of differences. These differences can be resolved as follows:
- sets the topology comparison (p9906 or p9907/p9908).
- change over the actual topology.
The appropriate action should be selected corresponding to the message that is displayed/output.

Note: In order to permanently accept the acknowledgement of the fault that can be resolved, then it must be saved in a non-volatile fashion (p0977).

p9905 Device specialization / Specialization

CU_G130_DP, CU_G130_PN, CU_G150_DP, CU_G150_PN

Can be changed: C1(1)	**Calculated:** -	**Access level:** 3
Data type: Unsigned16	**Dynamic index:** -	**Func. diagram:** -
P-Group: Topology	**Units group:** -	**Unit selection:** -
Not for motor type: -	**Scaling:** -	**Expert list:** 1
Min	**Max**	**Factory setting**
0	2	0

Description: With p9905 = 1, the serial numbers and the hardware versions of all of the components are transferred from the actual topology into the target topology and a new comparison is started.
For this device specialization, the components of the target topology may only differ from those of the actual topology by the serial numbers.
With p9905 = 2, the serial numbers, the hardware versions and the order numbers of all of the components are transferred from the actual topology into the target topology and a new comparison is started.
For this device specialization, the components of the target topology may only differ from those of the actual topology by the serial numbers and order numbers.

Note: p9905 is automatically set to 0 at the end of the operation.
In order to permanently accept the data, it is necessary to save in a non-volatile fashion (p0977).

p9906 Topology comparison, comparison stage of all components / Topo_cmpr tot comp

CU_G130_DP, CU_G130_PN, CU_G150_DP, CU_G150_PN

Can be changed: C1(1)	**Calculated:** -	**Access level:** 3
Data type: Integer16	**Dynamic index:** -	**Func. diagram:** -
P-Group: Topology	**Units group:** -	**Unit selection:** -
Not for motor type: -	**Scaling:** -	**Expert list:** 1
Min	**Max**	**Factory setting**
0	99	0

Description: Sets the type of comparison between the actual topology and target topology.
The comparison is started by setting the required value.

Value:
0: High: Compares the complete electronic rating plate
1: Average: Compares the component type and the Order number
2: Low: Compares the component type
3: Minimum: Compares the component class
99: Topology has different comparison stages

Note: The electronic rating plate comprises the following data:
- component type (e.g. "SMC20")
- Order No. (e.g. "6SL3055-0AA0-5BA0")
- manufacturer (e.g. SIEMENS)

© Siemens AG 2012 All Rights Reserved

- hardware version (e.g. "A")
- Serial No. (e.g. "T-P30050495")

When comparing the topology, the following data is compared in the target and actual topologies:
p9906 = 0: Component type, Order No., Hardware version, Manufacturer, Serial No.
p9906 = 1: Component type, Order No.
p9906 = 2: Component type
p9906 = 3: Component class (e.g. Sensor Module or Motor Module)

p9907 Topology comparison, comparison stage of the component number / Topo_cmpr comp_no

CU_G130_DP, CU_G130_PN, CU_G150_DP, CU_G150_PN

Can be changed: C1(1)	**Calculated:** -	**Access level:** 3
Data type: Unsigned8	**Dynamic index:** -	**Func. diagram:** -
P-Group: Topology	**Units group:** -	**Unit selection:** -
Not for motor type: -	**Scaling:** -	**Expert list:** 1
Min	**Max**	**Factory setting**
0	199	0

Description: Enters the number of the component where the setting of how the actual topology should be compared to the target topology should be changed.

Dependency: Refer to: p9908

p9908 Topology comparison, comparison stage of a component / Topo_cmpr 1 comp

CU_G130_DP, CU_G130_PN, CU_G150_DP, CU_G150_PN

Can be changed: C1(1)	**Calculated:** -	**Access level:** 3
Data type: Integer16	**Dynamic index:** -	**Func. diagram:** -
P-Group: Topology	**Units group:** -	**Unit selection:** -
Not for motor type: -	**Scaling:** -	**Expert list:** 1
Min	**Max**	**Factory setting**
0	99	0

Description: Sets the type of comparison of a component in the target topology with the actual topology.
The comparison is started by setting the required value.

Value:
0: High: Compares the complete electronic rating plate
1: Average: Compares the component type and the Order number
2: Low: Compares the component type
3: Minimum: Compares the component class
99: Topology has different comparison stages

Dependency: Refer to: p9907

Note: The electronic rating plate comprises the following data:
- component type (e.g. "SMC20")
- Order No. (e.g. "6SL3055-0AA0-5BA0")
- manufacturer (e.g. SIEMENS)
- hardware version (e.g. "A")
- Serial No. (e.g. "T-P30050495")

When comparing the topology, the following data is compared in the target and actual topologies:
p9908 = 0: Component type, Order No., Hardware version, Manufacturer, Serial No.
p9908 = 1: Component type, Order No.
p9908 = 2: Component type
p9908 = 3: Component class (e.g. Sensor Module or Motor Module)

© Siemens AG 2012 All Rights Reserved

p9909 Topology comparison, component replacement / Topo_cmpr replace

CU_G130_DP, CU_G130_PN, CU_G150_DP, CU_G150_PN

Can be changed: C1(1)	**Calculated:** -	**Access level:** 3
Data type: Unsigned8	**Dynamic index:** -	**Func. diagram:** -
P-Group: Topology	**Units group:** -	**Unit selection:** -
Not for motor type: -	**Scaling:** -	**Expert list:** 1
Min	**Max**	**Factory setting**
0	1	1

Description: For p9909 = 1, the serial number and the hardware version of the new replaced component is automatically transferred from the actual topology into the target topology and then saved in a non-volatile fashion.

For the components that have been replaced, the electronic rating plate must match as far as the following data is concerned:

- component type (e.g. "SMC20")
- Order No. (e.g. "6SL3055-0AA0-5BA0")

For p9909 = 0, serial numbers and hardware versions are not automatically transferred. In this case, the transfer must be made using p9904.

Dependency: Refer to: p9904, p9905

Note: The modified target topology is automatically saved in a non-volatile fashion when the drive object runs-up (e.g. after a POWER ON).

Special case for Control Unit and option slot modules:

When replacing these components, independent of p9909, the serial number and hardware version are automatically transferred and saved in a non-volatile fashion.

p9910 Transfer additional components into the target topology / Transfer comp

CU_G130_DP, CU_G130_PN, CU_G150_DP, CU_G150_PN

Can be changed: C1(1)	**Calculated:** -	**Access level:** 1
Data type: Integer16	**Dynamic index:** -	**Func. diagram:** -
P-Group: Topology	**Units group:** -	**Unit selection:** -
Not for motor type: -	**Scaling:** -	**Expert list:** 1
Min	**Max**	**Factory setting**
0	6	0

Description: Transfer additional inserted DRIVE-CLiQ components into the target topology and add the appropriate drive objects to the project.

Value:
0: No selection
1: Drive object type SERVO
2: Drive object type VECTOR
3: SINAMICS GM (DFEMV & VECTORMV)
4: SINAMICS SM (AFEMV & VECTORMV)
5: SINAMICS GL (VECTORGL)
6: SINAMICS SL (VECTORSL)

p9911[0...3] Insert drive object / Drv_obj insert

CU_G130_DP, CU_G130_PN, CU_G150_DP, CU_G150_PN

Can be changed: C1(1)	**Calculated:** -	**Access level:** 3
Data type: Unsigned32	**Dynamic index:** -	**Func. diagram:** -
P-Group: -	**Units group:** -	**Unit selection:** -
Not for motor type: -	**Scaling:** -	**Expert list:** 0
Min	**Max**	**Factory setting**
0	4294967295	0

Description: New drive objects can be created using this parameter.

Index 0:

The values 2 ... 62 are permissible.

Index 1:

Number of the drive object type (e.g. 11 for type SERVO).

Index 2:

Function modules defined for the drive object.

© Siemens AG 2012 All Rights Reserved

Index 3:
= 0: Ready.
= 1: Reset (only indices 0 ... 3).
= 2: Reset all (indices 0 ... 3 and flagged entries).
= 3: Check and flag for insertion.

Index: [0] = Drive object number
[1] = Drive object type
[2] = Drive object function module
[3] = Reset or check and flag for insertion

Note: Only for internal Siemens use.
The parameter is not displayed for the STARTER commissioning software.

p9912[0...1] Delete drive object / Drv_obj delete

CU_G130_DP, CU_G130_PN, CU_G150_DP, CU_G150_PN

Can be changed: C1(3)	**Calculated:** -	**Access level:** 3
Data type: Unsigned16	**Dynamic index:** -	**Func. diagram:** -
P-Group: -	**Units group:** -	**Unit selection:** -
Not for motor type: -	**Scaling:** -	**Expert list:** 0
Min	**Max**	**Factory setting**
0	62	0

Description: Drive objects can be deleted using this parameter.
Index 0:
The values 2 ... 62 are permissible.
Index 1:
= 0: Ready.
= 1: Reset (only indices 0 and 1)
= 2: Reset all (indices 0 and 1 and flagged entries).
= 3: Check and flag for deletion.
= 30: Check and flag for deletion. Keep target topology.

Index: [0] = Drive object number
[1] = Reset or check and flag for deletion

Note: Only for internal Siemens use.
The parameter is not displayed for the STARTER commissioning software.

p9913[0...2] Change drive object number / Change drv_obj_no

CU_G130_DP, CU_G130_PN, CU_G150_DP, CU_G150_PN

Can be changed: C1(4)	**Calculated:** -	**Access level:** 3
Data type: Unsigned16	**Dynamic index:** -	**Func. diagram:** -
P-Group: -	**Units group:** -	**Unit selection:** -
Not for motor type: -	**Scaling:** -	**Expert list:** 1
Min	**Max**	**Factory setting**
0	62	0

Description: Existing drive objects can be assigned new numbers using these parameters.
Index 0:
The values 2 ... 62 are permissible.
Index 1:
The values 2 ... 62 are permissible.
Index 2:
= 0: Ready.
= 1: Reset (only indices 0 ... 2).
= 2: Reset all (indices 0 ... 2 and flagged entries).
= 3: Check and flag for modification.

Index: [0] = Drive object number old
[1] = Drive object number new
[2] = Reset or check and flag for modification

© Siemens AG 2012 All Rights Reserved

Note: Only for internal Siemens use.
The parameter is not displayed for the STARTER commissioning software.

p9914[0...2] Change component number / Change comp_no

CU_G130_DP, CU_G130_PN, CU_G150_DP, CU_G150_PN

Can be changed: C1	**Calculated:** -	**Access level:** 3
Data type: Unsigned16	**Dynamic index:** -	**Func. diagram:** -
P-Group: -	**Units group:** -	**Unit selection:** -
Not for motor type: -	**Scaling:** -	**Expert list:** 0
Min	**Max**	**Factory setting**
0	199	0

Description: You can change the number of topology components using this parameter.
Index 0:
The values 2 ... 199 are permissible.
Index 1:
The values 2 ... 199 are permissible.
Index 2:
= 0: Ready.
= 1: Reset (only indices 0 ... 2).
= 2: Reset all (indices 0 ... 2 and flagged entries).
= 3: Check and flag for modification.

Index: [0] = Component number old
[1] = Component number new
[2] = Reset or check and flag for modification

Note: Only for internal Siemens use.
The parameter is not displayed for the STARTER commissioning software.

p9915 DRIVE-CLiQ data transfer error shutdown threshold master / DLQ fault master

CU_G130_DP, CU_G130_PN, CU_G150_DP, CU_G150_PN

Can be changed: C1(1)	**Calculated:** -	**Access level:** 4
Data type: Unsigned32	**Dynamic index:** -	**Func. diagram:** -
P-Group: Topology	**Units group:** -	**Unit selection:** -
Not for motor type: -	**Scaling:** -	**Expert list:** 1
Min	**Max**	**Factory setting**
0000 hex	0007 07FF hex	0007 02FF hex

Description: Only for internal Siemens service purposes.

p9916 DRIVE-CLiQ data transfer error shutdown threshold slave / DLQ fault slave

CU_G130_DP, CU_G130_PN, CU_G150_DP, CU_G150_PN

Can be changed: C1(1)	**Calculated:** -	**Access level:** 4
Data type: Unsigned32	**Dynamic index:** -	**Func. diagram:** -
P-Group: Topology	**Units group:** -	**Unit selection:** -
Not for motor type: -	**Scaling:** -	**Expert list:** 1
Min	**Max**	**Factory setting**
0000 hex	0007 07FF hex	0007 02FF hex

Description: Only for internal Siemens service purposes.

p9917[0...1] Delete component / Delete comp

CU_G130_DP, CU_G130_PN, CU_G150_DP, CU_G150_PN

Can be changed: C1(30)	**Calculated:** -	**Access level:** 3
Data type: Unsigned16	**Dynamic index:** -	**Func. diagram:** -
P-Group: -	**Units group:** -	**Unit selection:** -
Not for motor type: -	**Scaling:** -	**Expert list:** 0
Min	**Max**	**Factory setting**
0	199	0

Description: Excessive components that have not been assigned can be removed from the component target topology using this parameter.

© Siemens AG 2012 All Rights Reserved

Index 0:
The values 2 ... 199 are permissible.
Index 1:
= 0: Ready.
= 1: Reset (only indices 0 and 1)
= 2: Reset all (indices 0 and 1 and flagged entries).
= 3: Check and flag for deletion.

Index: [0] = Component number
[1] = Reset or check and flag for deletion

Note: Only for internal Siemens use.
The parameter is not displayed for the STARTER commissioning software.

p9920[0...99] Licensing, enter license key / Enter license key

CU_G130_DP, CU_G130_PN, CU_G150_DP, CU_G150_PN

Can be changed: U, T	**Calculated:** -	**Access level:** 2
Data type: Unsigned8	**Dynamic index:** -	**Func. diagram:** -
P-Group: -	**Units group:** -	**Unit selection:** -
Not for motor type: -	**Scaling:** -	**Expert list:** 1
Min	**Max**	**Factory setting**
-	-	-

Description: Enters the license key for this drive unit.
Example of the license key:
EACZ-QBCA = 69 65 67 90 45 81 66 67 65 dec (ASCII characters)
Index 0 = license key character 1 (e.g. 69 dec)
Index 1 = license key character 2 (e.g. 65 dec)
...
Index 8 = license key character 9 (e.g. 65 dec)
Index 9 = license key character 10 (e.g. 0 dec)
...

Dependency: Refer to: r7843, p9921
Refer to: A13000, A13001, F13010

Notice: An ASCII table (excerpt) can be found, for example, in the appendix to the List Manual.
With the STARTER commissioning software, ASCII characters are not entered coded, i.e. the characters of the license key can be entered as printed in the Certificate of License. In this case, STARTER codes the characters.

Note: For an invalid license key, all the indices have the value 0 dec.
Only the ASCII characters contained in a license key can be entered ("1" to "9", "A" to "H", "K" to "N", "P" to "Z" as well as "-").
When manually changing p9920[x] to the value 0 dec, all the values of all the following indices are also set to 0 dec.
After entering the license key, the license key must be activated (p9921).
If the licensing is not adequate, then the following alarm is displayed together with LED:
- A13000 --> licensing not sufficient
- LED READY --> flashes green/red with 0.5 Hz

p9921 Licensing, activate license key / Act license key

CU_G130_DP, CU_G130_PN, CU_G150_DP, CU_G150_PN

Can be changed: U, T	**Calculated:** -	**Access level:** 2
Data type: Integer16	**Dynamic index:** -	**Func. diagram:** -
P-Group: -	**Units group:** -	**Unit selection:** -
Not for motor type: -	**Scaling:** -	**Expert list:** 1
Min	**Max**	**Factory setting**
0	1	0

Description: Activates the entered license key.
The following is executed when activating the license key.
- the checksum of the entered license key is checked.

© Siemens AG 2012 All Rights Reserved

- the entered license key is saved in a non-volatile fashion on the memory card.
- re-enter the license key.

Value:
0: Inactive
1: Activate start license key

Dependency: Refer to: p9920
Refer to: A13000, A13001, F13010

Note: Before activation, the license key entered using parameter p9920 is checked. If this check identifies an error, activation is rejected. In this case, writing a 1 to p9921 is rejected.
When the license key has been activated, p9921 is automatically set to 0.

r9925[0...99] Firmware file incorrect / FW file incorr

CU_G130_DP, CU_G130_PN, CU_G150_DP, CU_G150_PN

Can be changed: -	**Calculated:** -	**Access level:** 2
Data type: Unsigned8	**Dynamic index:** -	**Func. diagram:** -
P-Group: -	**Units group:** -	**Unit selection:** -
Not for motor type: -	**Scaling:** -	**Expert list:** 1
Min	**Max**	**Factory setting**
-	-	-

Description: Displays the directory and name of the file whose status as shipped from the factory was identified as impermissible.

Dependency: Refer to: r9926
Refer to: A01016

Note: The directory and name of the file is displayed in the ASCII code.

r9926 Firmware check status / FW check status

CU_G130_DP, CU_G130_PN, CU_G150_DP, CU_G150_PN

Can be changed: -	**Calculated:** -	**Access level:** 2
Data type: Unsigned8	**Dynamic index:** -	**Func. diagram:** -
P-Group: -	**Units group:** -	**Unit selection:** -
Not for motor type: -	**Scaling:** -	**Expert list:** 1
Min	**Max**	**Factory setting**
-	-	-

Description: Displays the status when the firmware is checked when the system is booted.
0: Firmware not yet checked.
1: Check running.
2: Check successfully completed.
3: Check indicates an error.

Dependency: Refer to: r9925
Refer to: A01016

p9930[0...8] System logbook activation / SYSLOG activation

CU_G130_DP, CU_G130_PN, CU_G150_DP, CU_G150_PN

Can be changed: U, T	**Calculated:** -	**Access level:** 4
Data type: Unsigned8	**Dynamic index:** -	**Func. diagram:** -
P-Group: -	**Units group:** -	**Unit selection:** -
Not for motor type: -	**Scaling:** -	**Expert list:** 1
Min	**Max**	**Factory setting**
0	255	0

Description: Only for service purposes.

Index:
[0] = System logbook stage (0: Not active)
[1] = COM2/COM1 (0: COM2, 1: COM1)
[2] = Activate file write (0: Not active)
[3] = Display time stamp (0: Not displayed)
[4...7] = Reserved
[8] = System logbook file size (stages, each 10 kB)

© Siemens AG 2012 All Rights Reserved

Notice: Before powering down the Control Unit, ensure that the system logbook is switched out (p9930[0] = 0).
If writing to the file is activated (p9930[2] = 1), writing to the file must be de-activated again before switching off the Control Unit (p9930[2] = 0) in order to ensure that the system logbook has been completely written to the file.

p9931[0...129] System logbook module selection / SYSLOG mod select.

CU_G130_DP, CU_G130_PN, CU_G150_DP, CU_G150_PN

Can be changed: U, T	**Calculated:** -	**Access level:** 4
Data type: Unsigned32	**Dynamic index:** -	**Func. diagram:** -
P-Group: -	**Units group:** -	**Unit selection:** -
Not for motor type: -	**Scaling:** -	**Expert list:** 1
Min	**Max**	**Factory setting**
0000 hex	FFFF FFFF hex	0000 hex

Description: Only for service purposes.

p9932 Save system logbook EEPROM / SYSLOG EEPROM save

CU_G130_DP, CU_G130_PN, CU_G150_DP, CU_G150_PN

Can be changed: U, T	**Calculated:** -	**Access level:** 4
Data type: Unsigned8	**Dynamic index:** -	**Func. diagram:** -
P-Group: -	**Units group:** -	**Unit selection:** -
Not for motor type: -	**Scaling:** -	**Expert list:** 1
Min	**Max**	**Factory setting**
0	255	0

Description: Only for service purposes.

r9935.0 BO: POWER ON delay signal / POWER ON t_delay

CU_G130_DP, CU_G130_PN, CU_G150_DP, CU_G150_PN

Can be changed: -	**Calculated:** -	**Access level:** 3
Data type: Unsigned8	**Dynamic index:** -	**Func. diagram:** -
P-Group: -	**Units group:** -	**Unit selection:** -
Not for motor type: -	**Scaling:** -	**Expert list:** 1
Min	**Max**	**Factory setting**
-	-	-

Description: After power-on, binector output r9935.0 is set with the start of the first sampling time and is again reset after approx. 100 ms.

Bit field:

Bit	Signal name	1 signal	0 signal	FP
00	POWER ON delay signal	High	Low	-

p9941 Target topology feature delete all components / Feature delete

CU_G130_DP, CU_G130_PN, CU_G150_DP, CU_G150_PN

Can be changed: C1(1)	**Calculated:** -	**Access level:** 3
Data type: Unsigned32	**Dynamic index:** -	**Func. diagram:** -
P-Group: Topology	**Units group:** -	**Unit selection:** -
Not for motor type: -	**Scaling:** -	**Expert list:** 0
Min	**Max**	**Factory setting**
0	1	0

Description: For p9941 =1, the serial numbers of all components in the target topology are deleted (zero is written).
Through activation and de-activation this enables the actual topology components to be newly assigned to the target topology components.

Note: p9941 is automatically set to 0 at the end of the operation.
A warm restart is triggered automatically after p0009 = 0.

© Siemens AG 2012 All Rights Reserved

r9975[0...7] System utilization measured / Sys util meas

CU_G130_DP, CU_G130_PN, CU_G150_DP, CU_G150_PN	**Can be changed:** -	**Calculated:** -	**Access level:** 4
	Data type: FloatingPoint32	**Dynamic index:** -	**Func. diagram:** -
	P-Group: -	**Units group:** -	**Unit selection:** -
	Not for motor type: -	**Scaling:** -	**Expert list:** 1
	Min	**Max**	**Factory setting**
	- [%]	- [%]	- [%]

Description: Displays the measured system utilization.

The higher the value displayed, the higher the system utilization.

Index:
[0] = Computing time utilization (min)
[1] = Computing time utilization (averaged)
[2] = Computing time utilization (max)
[3] = Largest total utilization (min)
[4] = Largest total utilization (averaged)
[5] = Largest total utilization (max)
[6] = Reserved
[7] = Reserved

Dependency: Refer to: r9976, r9979, r9980, r9981

Refer to: F01054, F01205

Note: Re index 3 ... 5:

The total utilizations are determined using all sampling times used. The largest total utilizations are mapped here. The sampling time with the largest total utilization is displayed in r9979.

Total utilization:

Computing time load of sampling time involved including load from higher-priority sampling times (interrupts).

r9976[0...7] System utilization / Sys util

CU_G130_DP, CU_G130_PN, CU_G150_DP, CU_G150_PN	**Can be changed:** -	**Calculated:** -	**Access level:** 3
	Data type: FloatingPoint32	**Dynamic index:** -	**Func. diagram:** -
	P-Group: -	**Units group:** -	**Unit selection:** -
	Not for motor type: -	**Scaling:** -	**Expert list:** 1
	Min	**Max**	**Factory setting**
	- [%]	- [%]	- [%]

Description: Displays the system utilization.

If the utilization is greater than 100%, fault F01054 is output.

Index:
[0] = Reserved
[1] = Computing time utilization
[2] = Reserved
[3] = Reserved
[4] = Reserved
[5] = Largest total utilization
[6] = Reserved
[7] = Reserved

Dependency: Refer to: r9979, r9980

Refer to: F01054, F01205

Note: Re index 1:

The value shows the total computing time load of the system.

Re index 5:

The total utilization is determined using all sampling times used. The largest total utilization is mapped here. The sampling time with the largest total utilization is displayed in r9979.

Total utilization:

Computing time load of sampling time involved including load from higher-priority sampling times (interrupts).

© Siemens AG 2012 All Rights Reserved

r9979 Sampling time with largest total utilization / t_sampl lg total

CU_G130_DP, CU_G130_PN, CU_G150_DP, CU_G150_PN	**Can be changed:** -	**Calculated:** -	**Access level:** 3
	Data type: FloatingPoint32	**Dynamic index:** -	**Func. diagram:** -
	P-Group: -	**Units group:** -	**Unit selection:** -
	Not for motor type: -	**Scaling:** -	**Expert list:** 1
	Min	**Max**	**Factory setting**
	- [µs]	- [µs]	- [µs]

Description: Displays the sampling time with the largest total utilization.

Dependency: Refer to: r7901, r9976
Refer to: F01054

Note: The largest total utilization is displayed in r9976[5].
Total utilization:
Computing time load of sampling time involved including load from higher-priority sampling times (interrupts).

r9980[0...101] Sampling times utilization calculated / t_sampl util calc

CU_G130_DP, CU_G130_PN, CU_G150_DP, CU_G150_PN	**Can be changed:** -	**Calculated:** -	**Access level:** 4
	Data type: FloatingPoint32	**Dynamic index:** -	**Func. diagram:** -
	P-Group: -	**Units group:** -	**Unit selection:** -
	Not for motor type: -	**Scaling:** -	**Expert list:** 1
	Min	**Max**	**Factory setting**
	- [%]	- [%]	- [%]

Description: Displays the calculated utilizations for the active sampling times based on the existing target topology.

Index:
[0] = Net utilization 0
[1] = Total utilization 0
[2] = Net utilization 1
[3] = Total utilization 1
[4] = Net utilization 2
[5] = Total utilization 2
[6] = Net utilization 3
[7] = Total utilization 3
[8] = Net utilization 4
[9] = Total utilization 4
[10] = Net utilization 5
[11] = Total utilization 5
[12] = Net utilization 6
[13] = Total utilization 6
[14] = Net utilization 7
[15] = Total utilization 7
[16] = Net utilization 8
[17] = Total utilization 8
[18] = Net utilization 9
[19] = Total utilization 9
[20] = Net utilization 10
[21] = Total utilization 10
[22] = Net utilization 11
[23] = Total utilization 11
[24] = Net utilization 12
[25] = Total utilization 12
[26] = Net utilization 13
[27] = Total utilization 13
[28] = Net utilization 14
[29] = Total utilization 14
[30] = Net utilization 15
[31] = Total utilization 15
[32] = Net utilization 16
[33] = Total utilization 16
[34] = Net utilization 17
[35] = Total utilization 17

© Siemens AG 2012 All Rights Reserved

[36] = Net utilization 18
[37] = Total utilization 18
[38] = Net utilization 19
[39] = Total utilization 19
[40] = Net utilization 20
[41] = Total utilization 20
[42] = Net utilization 21
[43] = Total utilization 21
[44] = Net utilization 22
[45] = Total utilization 22
[46] = Net utilization 23
[47] = Total utilization 23
[48] = Net utilization 24
[49] = Total utilization 24
[50] = Net utilization 25
[51] = Total utilization 25
[52] = Net utilization 26
[53] = Total utilization 26
[54] = Net utilization 27
[55] = Total utilization 27
[56] = Net utilization 28
[57] = Total utilization 28
[58] = Net utilization 29
[59] = Total utilization 29
[60] = Net utilization 30
[61] = Total utilization 30
[62] = Net utilization 31
[63] = Total utilization 31
[64] = Net utilization 32
[65] = Total utilization 32
[66] = Net utilization 33
[67] = Total utilization 33
[68] = Net utilization 34
[69] = Total utilization 34
[70] = Net utilization 35
[71] = Total utilization 35
[72] = Net utilization 36
[73] = Total utilization 36
[74] = Net utilization 37
[75] = Total utilization 37
[76] = Net utilization 38
[77] = Total utilization 38
[78] = Net utilization 39
[79] = Total utilization 39
[80] = Net utilization 40
[81] = Total utilization 40
[82] = Net utilization 41
[83] = Total utilization 41
[84] = Net utilization 42
[85] = Total utilization 42
[86] = Net utilization 43
[87] = Total utilization 43
[88] = Net utilization 44
[89] = Total utilization 44
[90] = Net utilization 45
[91] = Total utilization 45
[92] = Net utilization 46
[93] = Total utilization 46
[94] = Net utilization 47
[95] = Total utilization 47
[96] = Net utilization 48
[97] = Total utilization 48
[98] = Net utilization 49
[99] = Total utilization 49

© Siemens AG 2012 All Rights Reserved

[100] = Net utilization 50
[101] = Total utilization 50

Dependency: Refer to: r7901, r9976, r9979
Refer to: F01054

Note: The corresponding sampling times can be read out in parameter r7901.
Net utilization:
Computing time load that is only called by the sampling time involved.
Total utilization:
Computing time load of sampling time involved including load from higher-priority sampling times (interrupts).

r9981[0...101] Sampling times utilization measured / t_sampl util meas

CU_G130_DP, CU_G130_PN, CU_G150_DP, CU_G150_PN	**Can be changed:** -	**Calculated:** -	**Access level:** 4
	Data type: FloatingPoint32	**Dynamic index:** -	**Func. diagram:** -
	P-Group: -	**Units group:** -	**Unit selection:** -
	Not for motor type: -	**Scaling:** -	**Expert list:** 1
	Min	**Max**	**Factory setting**
	- [%]	- [%]	- [%]

Description: Displays the utilizations measured for the active sampling times.

Index:
[0] = Net utilization 0
[1] = Total utilization 0
[2] = Net utilization 1
[3] = Total utilization 1
[4] = Net utilization 2
[5] = Total utilization 2
[6] = Net utilization 3
[7] = Total utilization 3
[8] = Net utilization 4
[9] = Total utilization 4
[10] = Net utilization 5
[11] = Total utilization 5
[12] = Net utilization 6
[13] = Total utilization 6
[14] = Net utilization 7
[15] = Total utilization 7
[16] = Net utilization 8
[17] = Total utilization 8
[18] = Net utilization 9
[19] = Total utilization 9
[20] = Net utilization 10
[21] = Total utilization 10
[22] = Net utilization 11
[23] = Total utilization 11
[24] = Net utilization 12
[25] = Total utilization 12
[26] = Net utilization 13
[27] = Total utilization 13
[28] = Net utilization 14
[29] = Total utilization 14
[30] = Net utilization 15
[31] = Total utilization 15
[32] = Net utilization 16
[33] = Total utilization 16
[34] = Net utilization 17
[35] = Total utilization 17
[36] = Net utilization 18
[37] = Total utilization 18
[38] = Net utilization 19
[39] = Total utilization 19
[40] = Net utilization 20
[41] = Total utilization 20

© Siemens AG 2012 All Rights Reserved

[42] = Net utilization 21
[43] = Total utilization 21
[44] = Net utilization 22
[45] = Total utilization 22
[46] = Net utilization 23
[47] = Total utilization 23
[48] = Net utilization 24
[49] = Total utilization 24
[50] = Net utilization 25
[51] = Total utilization 25
[52] = Net utilization 26
[53] = Total utilization 26
[54] = Net utilization 27
[55] = Total utilization 27
[56] = Net utilization 28
[57] = Total utilization 28
[58] = Net utilization 29
[59] = Total utilization 29
[60] = Net utilization 30
[61] = Total utilization 30
[62] = Net utilization 31
[63] = Total utilization 31
[64] = Net utilization 32
[65] = Total utilization 32
[66] = Net utilization 33
[67] = Total utilization 33
[68] = Net utilization 34
[69] = Total utilization 34
[70] = Net utilization 35
[71] = Total utilization 35
[72] = Net utilization 36
[73] = Total utilization 36
[74] = Net utilization 37
[75] = Total utilization 37
[76] = Net utilization 38
[77] = Total utilization 38
[78] = Net utilization 39
[79] = Total utilization 39
[80] = Net utilization 40
[81] = Total utilization 40
[82] = Net utilization 41
[83] = Total utilization 41
[84] = Net utilization 42
[85] = Total utilization 42
[86] = Net utilization 43
[87] = Total utilization 43
[88] = Net utilization 44
[89] = Total utilization 44
[90] = Net utilization 45
[91] = Total utilization 45
[92] = Net utilization 46
[93] = Total utilization 46
[94] = Net utilization 47
[95] = Total utilization 47
[96] = Net utilization 48
[97] = Total utilization 48
[98] = Net utilization 49
[99] = Total utilization 49
[100] = Net utilization 50
[101] = Total utilization 50

Dependency: Refer to: r7901, r9975, r9980
Refer to: F01054

© Siemens AG 2012 All Rights Reserved

Note: The corresponding sampling times can be read out in parameter r7901.
Net utilization:
Computing time load that is only called by the sampling time involved.
Total utilization:
Computing time load of sampling time involved including load from higher-priority sampling times (interrupts).

r9982[0...4] Data memory utilization / Mem_util dat_mem

CU_G130_DP, CU_G130_PN, CU_G150_DP, CU_G150_PN

Can be changed: -	**Calculated:** -	**Access level:** 3
Data type: FloatingPoint32	**Dynamic index:** -	**Func. diagram:** -
P-Group: -	**Units group:** -	**Unit selection:** -
Not for motor type: -	**Scaling:** -	**Expert list:** 1
Min	**Max**	**Factory setting**
- [%]	- [%]	- [%]

Description: Displays the calculated data memory utilization rates based on the existing target topology.

Index:
[0] = Fast data memory 1
[1] = Fast data memory 2
[2] = Fast data memory 3
[3] = Fast data memory 4
[4] = Reserved

Dependency: Refer to: F01068

r9983[0...4] Measured data memory utilization (actual load) / Mem_ut dat_mem ms

CU_G130_DP, CU_G130_PN, CU_G150_DP, CU_G150_PN

Can be changed: -	**Calculated:** -	**Access level:** 4
Data type: FloatingPoint32	**Dynamic index:** -	**Func. diagram:** -
P-Group: -	**Units group:** -	**Unit selection:** -
Not for motor type: -	**Scaling:** -	**Expert list:** 1
Min	**Max**	**Factory setting**
- [%]	- [%]	- [%]

Description: Displays the measured data memory utilization rates based on the existing target topology.

Index:
[0] = Fast Memory 1
[1] = Fast Memory 2
[2] = Fast Memory 3
[3] = Fast Memory 4
[4] = Heap

Dependency: Refer to: F01068

r9984[0...4] Data memory utilization OA / Mem_ut dat_mem OA

CU_G130_DP, CU_G130_PN, CU_G150_DP, CU_G150_PN

Can be changed: -	**Calculated:** -	**Access level:** 3
Data type: FloatingPoint32	**Dynamic index:** -	**Func. diagram:** -
P-Group: -	**Units group:** -	**Unit selection:** -
Not for motor type: -	**Scaling:** -	**Expert list:** 1
Min	**Max**	**Factory setting**
- [%]	- [%]	- [%]

Description: Displays the utilization of the data memory by OA applications.

Index:
[0] = Fast Memory 1
[1] = Fast Memory 2
[2] = Fast Memory 3
[3] = Fast Memory 4
[4] = Reserved

Dependency: Refer to: F01068

© Siemens AG 2012 All Rights Reserved

r9986[0...7] DRIVE-CLiQ system load / DQ system load

CU_G130_DP, CU_G130_PN, CU_G150_DP, CU_G150_PN

Can be changed: -	**Calculated:** -	**Access level:** 3
Data type: FloatingPoint32	**Dynamic index:** -	**Func. diagram:** -
P-Group: -	**Units group:** -	**Unit selection:** -
Not for motor type: -	**Scaling:** -	**Expert list:** 1
Min	**Max**	**Factory setting**
- [%]	- [%]	- [%]

Description: Displays the calculated DRIVE-CLiQ system load based on the existing target topology.
The values are not made available until the RUNUP READY (800) state is adopted (see p3988).
Index 0 ... 7 corresponds to DRIVE-CLiQ socket X100 ... X107.

Dependency: Refer to: F01340

r9987[0...7] DRIVE-CLiQ bandwidth load / DQ bandw load

CU_G130_DP, CU_G130_PN, CU_G150_DP, CU_G150_PN

Can be changed: -	**Calculated:** -	**Access level:** 3
Data type: FloatingPoint32	**Dynamic index:** -	**Func. diagram:** -
P-Group: -	**Units group:** -	**Unit selection:** -
Not for motor type: -	**Scaling:** -	**Expert list:** 1
Min	**Max**	**Factory setting**
- [%]	- [%]	- [%]

Description: Displays the calculated DRIVE-CLiQ bandwidth load based on the existing target topology.
The values are not made available until the RUNUP READY (800) state is adopted (see p3988).
Index 0 ... 7 corresponds to DRIVE-CLiQ socket X100 ... X107.

Dependency: Refer to: F01340

r9988[0...7] DRIVE-CLiQ DPRAM load / DQ DPRAM load

CU_G130_DP, CU_G130_PN, CU_G150_DP, CU_G150_PN

Can be changed: -	**Calculated:** -	**Access level:** 3
Data type: FloatingPoint32	**Dynamic index:** -	**Func. diagram:** -
P-Group: -	**Units group:** -	**Unit selection:** -
Not for motor type: -	**Scaling:** -	**Expert list:** 1
Min	**Max**	**Factory setting**
- [%]	- [%]	- [%]

Description: Displays the calculated DRIVE-CLiQ DPRAM load based on the existing target topology.
The values are not made available until the RUNUP READY (800) state is adopted (see p3988).
Index 0 ... 7 corresponds to DRIVE-CLiQ socket X100 ... X107.

Dependency: Refer to: F01340

p9990 DO memory usage actual value determination selection / Mem_use ActVal sel

CU_G130_DP, CU_G130_PN, CU_G150_DP, CU_G150_PN

Can be changed: U, T	**Calculated:** -	**Access level:** 4
Data type: Unsigned16	**Dynamic index:** -	**Func. diagram:** -
P-Group: -	**Units group:** -	**Unit selection:** -
Not for motor type: -	**Scaling:** -	**Expert list:** 1
Min	**Max**	**Factory setting**
0	65535	0

Description: The meaning of the parameter differs for reading and writing.
Read:
- Returns the number of memory areas monitored.
Write:
- Memory usage of a drive object: Enter drive object number
- Memory usage of the complete system: Enter value 65535

© Siemens AG 2012 All Rights Reserved

r9991[0...4] Memory usage drive object actual value / Mem_use DO ActVal

CU_G130_DP, CU_G130_PN, CU_G150_DP, CU_G150_PN

Can be changed: -	**Calculated:** -	**Access level:** 4
Data type: Unsigned32	**Dynamic index:** -	**Func. diagram:** -
P-Group: -	**Units group:** -	**Unit selection:** -
Not for motor type: -	**Scaling:** -	**Expert list:** 1
Min	**Max**	**Factory setting**
-	-	-

Description: Displays the memory usage for each drive object as actual value.

Index:
[0] = Fast Memory 1
[1] = Fast Memory 2
[2] = Fast Memory 3
[3] = Fast Memory 4
[4] = Heap

r9992[0...4] Memory usage drive object reference value / Mem_use DO ref val

CU_G130_DP, CU_G130_PN, CU_G150_DP, CU_G150_PN

Can be changed: -	**Calculated:** -	**Access level:** 4
Data type: Unsigned32	**Dynamic index:** -	**Func. diagram:** -
P-Group: -	**Units group:** -	**Unit selection:** -
Not for motor type: -	**Scaling:** -	**Expert list:** 1
Min	**Max**	**Factory setting**
-	-	-

Description: Displays the memory usage for each drive object as reference value.

Index:
[0] = Fast Memory 1
[1] = Fast Memory 2
[2] = Fast Memory 3
[3] = Fast Memory 4
[4] = Heap

r9993[0...4] Memory usage OA application / Mem_use OA

CU_G130_DP, CU_G130_PN, CU_G150_DP, CU_G150_PN

Can be changed: -	**Calculated:** -	**Access level:** 4
Data type: Unsigned32	**Dynamic index:** -	**Func. diagram:** -
P-Group: -	**Units group:** -	**Unit selection:** -
Not for motor type: -	**Scaling:** -	**Expert list:** 1
Min	**Max**	**Factory setting**
-	-	-

Description: Displays the memory usage of an OA application.

Index:
[0] = Fast Memory 1
[1] = Fast Memory 2
[2] = Fast Memory 3
[3] = Fast Memory 4
[4] = Heap

r9999[0...99] Software error internal supplementary diagnostics / SW_err int diag

CU_G130_DP, CU_G130_PN, CU_G150_DP, CU_G150_PN

Can be changed: -	**Calculated:** -	**Access level:** 3
Data type: Unsigned32	**Dynamic index:** -	**Func. diagram:** -
P-Group: -	**Units group:** -	**Unit selection:** -
Not for motor type: -	**Scaling:** -	**Expert list:** 1
Min	**Max**	**Factory setting**
-	-	-

Description: Diagnostics parameter to display additional information for internal software errors.

Note: Only for internal Siemens troubleshooting.

© Siemens AG 2012 All Rights Reserved

p10000 SI sampling time / SI t_sample

TM54F_MA, TM54F_SL

Can be changed: C2(95)	**Calculated:** -	**Access level:** 3
Data type: FloatingPoint32	**Dynamic index:** -	**Func. diagram:** -
P-Group: Safety Integrated	**Units group:** -	**Unit selection:** -
Not for motor type: -	**Scaling:** -	**Expert list:** 1
Min	**Max**	**Factory setting**
1.00 [ms]	25.00 [ms]	12.00 [ms]

Description: Sets the sampling time for the Terminal Module 54F (TM54F).

Note: The sampling time in p10000 must be identical to the monitoring clock cycle in p9500/p9300 on the drives.

p10001 SI delay time for test stop at DO 0 ... DO 3 / SI t_delay DO

TM54F_MA, TM54F_SL

Can be changed: C2(95)	**Calculated:** -	**Access level:** 3
Data type: FloatingPoint32	**Dynamic index:** -	**Func. diagram:** -
P-Group: Safety Integrated	**Units group:** -	**Unit selection:** -
Not for motor type: -	**Scaling:** -	**Expert list:** 1
Min	**Max**	**Factory setting**
2.00 [ms]	2000.00 [ms]	500.00 [ms]

Description: Sets the delay time for testing the digital outputs 0 ... 3 (DO 0 ... DO 3).

Within this time, for a forced checking procedure of the digital outputs, the signal must have been detected via the corresponding readback input (p10047).

Dependency: Refer to: p10003, p10007, p10041, p10046

Note: The delay time must be set to a value greater than the debounce time (p10017).

p10002 SI discrepancy monitoring time / SI discrep t_monit

TM54F_MA, TM54F_SL

Can be changed: C2(95)	**Calculated:** -	**Access level:** 3
Data type: FloatingPoint32	**Dynamic index:** -	**Func. diagram:** 2850, 2851
P-Group: Safety Integrated	**Units group:** -	**Unit selection:** -
Not for motor type: -	**Scaling:** -	**Expert list:** 1
Min	**Max**	**Factory setting**
1.00 [ms]	2000.00 [ms]	500.00 [ms]

Description: Sets the monitoring time for the discrepancy for the digital inputs.

The signal states at the two associated digital inputs (F-DI) must assume the same state within this monitoring time.

Note: F-DI: Failsafe Digital Input

p10003 SI forced checking procedure timer / SI FCP Timer

TM54F_MA

Can be changed: C2(95)	**Calculated:** -	**Access level:** 3
Data type: FloatingPoint32	**Dynamic index:** -	**Func. diagram:** 2848
P-Group: Safety Integrated	**Units group:** -	**Unit selection:** -
Not for motor type: -	**Scaling:** -	**Expert list:** 1
Min	**Max**	**Factory setting**
0.00 [h]	8760.00 [h]	8.00 [h]

Description: Sets the time to carry out the forced checking procedure (test stop).

Within the parameterized time, the digital inputs/outputs must must have been subject to a forced checking procedure at least once. The forced checking procedure is started with BI: p10007 = 0/1 signal.

Dependency: Refer to: p10001, p10007, p10046

© Siemens AG 2012 All Rights Reserved

r10004[0...1] SI actual checksum TM54F parameters / SI act CRC TM54F

TM54F_MA, TM54F_SL	**Can be changed:** -	**Calculated:** -	**Access level:** 3
	Data type: Unsigned32	**Dynamic index:** -	**Func. diagram:** 2847
	P-Group: Safety Integrated	**Units group:** -	**Unit selection:** -
	Not for motor type: -	**Scaling:** -	**Expert list:** 1
	Min	**Max**	**Factory setting**
	-	-	-

Description: Displays the actual checksum of the checksum-checked parameters for the Terminal Module 54F (TM54F).

Index: [0] = Checksum HW-independent TM54F parameters
[1] = Checksum HW-dependent TM54F parameters (MM)

p10005[0...1] SI reference checksum TM54F parameters / SI ref CRC TM54F

TM54F_MA, TM54F_SL	**Can be changed:** C2(95)	**Calculated:** -	**Access level:** 3
	Data type: Unsigned32	**Dynamic index:** -	**Func. diagram:** 2847
	P-Group: Safety Integrated	**Units group:** -	**Unit selection:** -
	Not for motor type: -	**Scaling:** -	**Expert list:** 1
	Min	**Max**	**Factory setting**
	0000 hex	FFFF FFFF hex	0000 hex

Description: Displays the reference checksum of the checksum-checked parameters for the Terminal Module 54F (TM54F).

Index: [0] = Checksum HW-independent TM54F parameters
[1] = Checksum HW-dependent TM54F parameters (MM)

p10006 SI acknowledgement internal event input terminal / SI ackn int event

TM54F_MA, TM54F_SL	**Can be changed:** C2(95)	**Calculated:** -	**Access level:** 3
	Data type: Integer16	**Dynamic index:** -	**Func. diagram:** -
	P-Group: Safety Integrated	**Units group:** -	**Unit selection:** -
	Not for motor type: -	**Scaling:** -	**Expert list:** 1
	Min	**Max**	**Factory setting**
	0	255	0

Description: Select a fail-safe digital input for the signal "acknowledge internal event" (internal fault).
The signal is transferred to the corresponding control signal of all drives.
The falling edge at this input resets the status "internal event" in the drives.
The rising edge at this input acknowledges any existing discrepancy errors.

Value:
0: Statically active
1: F-DI 0 (X521.2/3/6)
2: F-DI 1 (X521.4/5/7)
3: F-DI 2 (X522.1/2/7)
4: F-DI 3 (X522.3/4/8)
5: F-DI 4 (X522.5/6/9)
6: F-DI 5 (X531.2/3/6)
7: F-DI 6 (X531.4/5/7)
8: F-DI 7 (X532.1/2/7)
9: F-DI 8 (X532.3/4/8)
10: F-DI 9 (X532.5/6/9)
255: Statically inact

Dependency: Refer to: A35081

Note: The values "static active" and "static inactive" result in an inactive function of the safe acknowledgment.
F-DI: Failsafe Digital Input

© Siemens AG 2012 All Rights Reserved

p10007 BI: SI forced checking procedure F-DI/F-DO signal source / FCP F-DI/DO s_src

TM54F_MA

Can be changed: C2(95)	**Calculated:** -	**Access level:** 3
Data type: Unsigned32 / Binary	**Dynamic index:** -	**Func. diagram:** 2848
P-Group: Safety Integrated	**Units group:** -	**Unit selection:** -
Not for motor type: -	**Scaling:** -	**Expert list:** 1
Min	**Max**	**Factory setting**
-	-	0

Description: Sets the signal source to initiate the test stop.
For example, a digital input of the Control Unit or one of the other Terminal Modules can be set as signal source.
The test stop is triggered on a 0/1 signal edge.
The TM54F must be in the "ready" state (p0010 = 0).

Dependency: Refer to: p10001, p10003, p10041, p10046

Notice: Digital inputs of the TM54F must not be used to trigger the test stop.

p10008 SI operating mode TM54F / SI op_mode TM54F

TM54F_MA, TM54F_SL

Can be changed: C2(95)	**Calculated:** -	**Access level:** 4
Data type: Integer16	**Dynamic index:** -	**Func. diagram:** -
P-Group: Safety Integrated	**Units group:** -	**Unit selection:** -
Not for motor type: -	**Scaling:** -	**Expert list:** 1
Min	**Max**	**Factory setting**
0	1	1

Description: Sets the operating mode for the Terminal Module 54F (TM54F).

Value:
0: Function interface
1: Control interface

Note: Parameter being prepared. For this firmware version, the function interface is not supported.

p10009 SI SLP retract F-DI / SI SLP retr F-DI

TM54F_MA, TM54F_SL

Can be changed: C2(95)	**Calculated:** -	**Access level:** 3
Data type: Integer16	**Dynamic index:** -	**Func. diagram:** -
P-Group: Safety Integrated	**Units group:** -	**Unit selection:** -
Not for motor type: -	**Scaling:** -	**Expert list:** 1
Min	**Max**	**Factory setting**
0	10	0

Description: Selects a fail-safe digital input for the "Retract SLP" function.
A rising edge at this FDI makes it possible to retract the axes, which at this instant in time indicate a violation of the SLP limit.
After safe acknowledgment of the active safety faults, the axes can be traversed in the direction of the permitted position range.
In the retract mode, SLP becomes inactive, and SDI, if enabled, is selected in the direction of the permitted position range.
A 0 signal at the F-DI for retraction deactivates the active retract mode. (SLP becomes active again and SDI corresponds to the actual F-DIs that have been selected.)

Value:
0: Function inactive
1: F-DI 0 (X521.2/3/6)
2: F-DI 1 (X521.4/5/7)
3: F-DI 2 (X522.1/2/7)
4: F-DI 3 (X522.3/4/8)
5: F-DI 4 (X522.5/6/9)
6: F-DI 5 (X531.2/3/6)
7: F-DI 6 (X531.4/5/7)
8: F-DI 7 (X532.1/2/7)
9: F-DI 8 (X532.3/4/8)
10: F-DI 9 (X532.5/6/9)

© Siemens AG 2012 All Rights Reserved

Note: - Retraction is only possible, if SDI in the opposite direction of the permitted position range is not already selected.
- A discrepancy at this F-DI must be acknowledged using a safe acknowledgment.
F-DI: Failsafe Digital Input
SDI: Safe Direction (safe motion direction)
SLP: Safely-Limited Position

p10010[0...5] SI drive object assignment / SI drv_obj assign

TM54F_MA, TM54F_SL

Can be changed: C2(95)	**Calculated:** -	**Access level:** 3
Data type: Unsigned16	**Dynamic index:** -	**Func. diagram:** 2847, 2848
P-Group: Safety Integrated	**Units group:** -	**Unit selection:** -
Not for motor type: -	**Scaling:** -	**Expert list:** 1
Min	**Max**	**Factory setting**
0	62	0

Description: Sets the drive object number for the drives that are available.

Index:
[0] = Drive 1
[1] = Drive 2
[2] = Drive 3
[3] = Drive 4
[4] = Drive 5
[5] = Drive 6

Notice: If, for a drive, Terminal Module 54F (TM54F) is activated (p9601.2 = 1), its drive object number must be set in an index.

Note: A change only becomes effective after a POWER ON.

p10011[0...5] SI drive group assignment / SI drv_gr assign

TM54F_MA, TM54F_SL

Can be changed: C2(95)	**Calculated:** -	**Access level:** 3
Data type: Unsigned16	**Dynamic index:** -	**Func. diagram:** 2848
P-Group: Safety Integrated	**Units group:** -	**Unit selection:** -
Not for motor type: -	**Scaling:** -	**Expert list:** 1
Min	**Max**	**Factory setting**
1	4	1

Description: Sets the drive group for the drives that are available.
A drive group is a combination of several drives with the same types of behavior.

Index:
[0] = Drive 1
[1] = Drive 2
[2] = Drive 3
[3] = Drive 4
[4] = Drive 5
[5] = Drive 6

p10012[0...5] SI Motor Module Node Identifier Word 1 / SI MM Node ID 1

TM54F_MA, TM54F_SL

Can be changed: C2(95)	**Calculated:** -	**Access level:** 4
Data type: Unsigned32	**Dynamic index:** -	**Func. diagram:** -
P-Group: Safety Integrated	**Units group:** -	**Unit selection:** -
Not for motor type: -	**Scaling:** -	**Expert list:** 1
Min	**Max**	**Factory setting**
0000 hex	FFFF FFFF hex	0000 hex

Description: Sets the actual Node Identifier (word 1, bit 0 ... 31) for the Motor Modules.

Index:
[0] = Drive 1
[1] = Drive 2
[2] = Drive 3
[3] = Drive 4
[4] = Drive 5
[5] = Drive 6

Dependency: Refer to: p10013, p10014

© Siemens AG 2012 All Rights Reserved

Note: The Node Identifier (96 bit) is represented in the following 3 parameters.
p10012[0] word 1 (bit 0 ... 31) for Motor Module 1
...
p10012[5] word 1 (bit 0 ... 31) for Motor Module 6
p10013[0] word 2 (bit 32 ... 63) for Motor Module 1
...
p10013[5] word 2 (bit 32 ... 63) for Motor Module 6
p10014[0] word 3 (bit 64 ... 95) for Motor Module 1
...
p10014[5] word 3 (bit 64 ... 95) for Motor Module 6

p10013[0...5] SI Motor Module Node Identifier Word 2 / SI MM Node ID 2

TM54F_MA, TM54F_SL

Can be changed: C2(95)	**Calculated:** -	**Access level:** 4
Data type: Unsigned32	**Dynamic index:** -	**Func. diagram:** -
P-Group: Safety Integrated	**Units group:** -	**Unit selection:** -
Not for motor type: -	**Scaling:** -	**Expert list:** 1
Min	**Max**	**Factory setting**
0000 hex	FFFF FFFF hex	0000 hex

Description: Sets the actual Node Identifier (word 2, bit 32 ... 63) for the Motor Modules.

Index:
[0] = Drive 1
[1] = Drive 2
[2] = Drive 3
[3] = Drive 4
[4] = Drive 5
[5] = Drive 6

Dependency: Refer to: p10012, p10014

Note: The complete Node Identifier (96 bit) is represented in p10012, p10013 and p10014.

p10014[0...5] SI Motor Module Node Identifier Word 3 / SI MM Node ID 3

TM54F_MA, TM54F_SL

Can be changed: C2(95)	**Calculated:** -	**Access level:** 4
Data type: Unsigned32	**Dynamic index:** -	**Func. diagram:** -
P-Group: Safety Integrated	**Units group:** -	**Unit selection:** -
Not for motor type: -	**Scaling:** -	**Expert list:** 1
Min	**Max**	**Factory setting**
0000 hex	FFFF FFFF hex	0000 hex

Description: Sets the actual Node Identifier (word 3, bit 64 ... 95) for the Motor Modules.

Index:
[0] = Drive 1
[1] = Drive 2
[2] = Drive 3
[3] = Drive 4
[4] = Drive 5
[5] = Drive 6

Dependency: Refer to: p10012, p10013

Note: The complete Node Identifier (96 bit) is represented in p10012, p10013 and p10014.

p10017 SI digital inputs debounce time / SI DI t_debounce

TM54F_MA, TM54F_SL

Can be changed: C2(95)	**Calculated:** -	**Access level:** 3
Data type: FloatingPoint32	**Dynamic index:** -	**Func. diagram:** -
P-Group: Safety Integrated	**Units group:** -	**Unit selection:** -
Not for motor type: -	**Scaling:** -	**Expert list:** 1
Min	**Max**	**Factory setting**
1.00 [ms]	100.00 [ms]	1.00 [ms]

Description: Sets the debounce time for digital inputs.
The debounce time is accepted rounded off to whole milliseconds.

© Siemens AG 2012 All Rights Reserved

The debounce time acts on the following digital inputs:
- Fail-safe digital inputs (F-DI).
- Single-channel digital inputs (DI).

Note: Example:
Debounce time = 1 ms: Fault pulses of 1 ms are filtered; only pulses longer than 2 ms are processed.
Debounce time = 3 ms: Fault pulses of 3 ms are filtered; only pulses longer than 4 ms are processed.
The debounce result can be read in r10051.

p10020[0...3] SI special operating mode selection / SI spec op sel

TM54F_MA, TM54F_SL

Can be changed: C2(95)	**Calculated:** -	**Access level:** 4
Data type: Unsigned32	**Dynamic index:** -	**Func. diagram:** -
P-Group: Safety Integrated	**Units group:** -	**Unit selection:** -
Not for motor type: -	**Scaling:** -	**Expert list:** 1
Min	**Max**	**Factory setting**
0	3	1

Description: Sets the special operating mode for the operating mode "function interface".
0 = Inactive
1 = Safe Operating Stop with braking (SS2)
2 = Safe Operating Stop without braking (SOS)
3 = Safely reduced speed without standstill (SLS)
4 = Safely reduced speed with agreement (SS2 --> SLS)

Index: [0] = Drive group 1
[1] = Drive group 2
[2] = Drive group 3
[3] = Drive group 4

Dependency: Refer to: p10008

Note: Parameter being prepared. For this firmware version, the function interface is not supported.
SLS: Safely-Limited Speed
SOS: Safe Operating Stop
SS2: Safe Stop 2

p10021[0...3] SI Emergency Stop stop response / SI Emergency Stop

TM54F_MA, TM54F_SL

Can be changed: C2(95)	**Calculated:** -	**Access level:** 4
Data type: Unsigned32	**Dynamic index:** -	**Func. diagram:** -
P-Group: Safety Integrated	**Units group:** -	**Unit selection:** -
Not for motor type: -	**Scaling:** -	**Expert list:** 1
Min	**Max**	**Factory setting**
0	2	0

Description: Sets the stop response for the drive group for Emergency Stop.
The input terminal for Emergency Stop is set in p10038.
0 = Stop reaction STO
1 = Stop reaction SS1
2 = Stop reaction SS2

Index: [0] = Drive group 1
[1] = Drive group 2
[2] = Drive group 3
[3] = Drive group 4

Dependency: Refer to: p10008, p10038

Note: Parameter being prepared. For this firmware version, the function interface is not supported.

© Siemens AG 2012 All Rights Reserved

p10022[0...3] SI STO input terminal / SI STO DI

TM54F_MA, TM54F_SL	**Can be changed:** C2(95)	**Calculated:** -	**Access level:** 3
	Data type: Integer16	**Dynamic index:** -	**Func. diagram:** -
	P-Group: Safety Integrated	**Units group:** -	**Unit selection:** -
	Not for motor type: -	**Scaling:** -	**Expert list:** 1
	Min	**Max**	**Factory setting**
	0	255	0

Description: Sets the input terminal for the "STO" function (operating mode "control interface").

Value:
0: Statically active
1: F-DI 0 (X521.2/3/6)
2: F-DI 1 (X521.4/5/7)
3: F-DI 2 (X522.1/2/7)
4: F-DI 3 (X522.3/4/8)
5: F-DI 4 (X522.5/6/9)
6: F-DI 5 (X531.2/3/6)
7: F-DI 6 (X531.4/5/7)
8: F-DI 7 (X532.1/2/7)
9: F-DI 8 (X532.3/4/8)
10: F-DI 9 (X532.5/6/9)
255: Statically inact

Index:
[0] = Drive group 1
[1] = Drive group 2
[2] = Drive group 3
[3] = Drive group 4

Note:
If value = 0:
No terminal assigned, safety function always active.
If value = 255:
No terminal assigned, safety function always inactive.
F-DI: Failsafe Digital Input
STO: Safe Torque Off

p10023[0...3] SI SS1 input terminal / SI SS1 DI

TM54F_MA, TM54F_SL	**Can be changed:** C2(95)	**Calculated:** -	**Access level:** 3
	Data type: Integer16	**Dynamic index:** -	**Func. diagram:** -
	P-Group: Safety Integrated	**Units group:** -	**Unit selection:** -
	Not for motor type: -	**Scaling:** -	**Expert list:** 1
	Min	**Max**	**Factory setting**
	0	255	0

Description: Sets the input terminal for SS1 (operating mode "control interface").

Value:
0: Statically active
1: F-DI 0 (X521.2/3/6)
2: F-DI 1 (X521.4/5/7)
3: F-DI 2 (X522.1/2/7)
4: F-DI 3 (X522.3/4/8)
5: F-DI 4 (X522.5/6/9)
6: F-DI 5 (X531.2/3/6)
7: F-DI 6 (X531.4/5/7)
8: F-DI 7 (X532.1/2/7)
9: F-DI 8 (X532.3/4/8)
10: F-DI 9 (X532.5/6/9)
255: Statically inact

Index:
[0] = Drive group 1
[1] = Drive group 2
[2] = Drive group 3
[3] = Drive group 4

© Siemens AG 2012 All Rights Reserved

Note: If value = 0:
No terminal assigned, safety function always active.
If value = 255:
No terminal assigned, safety function always inactive.
F-DI: Failsafe Digital Input
SS1: Safe Stop 1

p10024[0...3] SI SS2 input terminal / SI SS2 DI

TM54F_MA, TM54F_SL

Can be changed: C2(95)	**Calculated:** -	**Access level:** 3
Data type: Integer16	**Dynamic index:** -	**Func. diagram:** -
P-Group: Safety Integrated	**Units group:** -	**Unit selection:** -
Not for motor type: -	**Scaling:** -	**Expert list:** 1
Min	**Max**	**Factory setting**
0	255	0

Description: Sets the input terminal for SS2 (operating mode "control interface").

Value:
0: Statically active
1: F-DI 0 (X521.2/3/6)
2: F-DI 1 (X521.4/5/7)
3: F-DI 2 (X522.1/2/7)
4: F-DI 3 (X522.3/4/8)
5: F-DI 4 (X522.5/6/9)
6: F-DI 5 (X531.2/3/6)
7: F-DI 6 (X531.4/5/7)
8: F-DI 7 (X532.1/2/7)
9: F-DI 8 (X532.3/4/8)
10: F-DI 9 (X532.5/6/9)
255: Statically inact

Index:
[0] = Drive group 1
[1] = Drive group 2
[2] = Drive group 3
[3] = Drive group 4

Note: If value = 0:
No terminal assigned, safety function always active.
If value = 255:
No terminal assigned, safety function always inactive.
F-DI: Failsafe Digital Input
SS2: Safe Stop 2

p10025[0...3] SI SOS input terminal / SI SOS DI

TM54F_MA, TM54F_SL

Can be changed: C2(95)	**Calculated:** -	**Access level:** 3
Data type: Integer16	**Dynamic index:** -	**Func. diagram:** -
P-Group: Safety Integrated	**Units group:** -	**Unit selection:** -
Not for motor type: -	**Scaling:** -	**Expert list:** 1
Min	**Max**	**Factory setting**
0	255	0

Description: Sets the fail-safe digital input (F-DI) for the "SOS" function (operating mode = control interface).

Value:
0: Statically active
1: F-DI 0 (X521.2/3/6)
2: F-DI 1 (X521.4/5/7)
3: F-DI 2 (X522.1/2/7)
4: F-DI 3 (X522.3/4/8)
5: F-DI 4 (X522.5/6/9)
6: F-DI 5 (X531.2/3/6)
7: F-DI 6 (X531.4/5/7)
8: F-DI 7 (X532.1/2/7)
9: F-DI 8 (X532.3/4/8)

© Siemens AG 2012 All Rights Reserved

10: F-DI 9 (X532.5/6/9)
255: Statically inact

Index: [0] = Drive group 1
[1] = Drive group 2
[2] = Drive group 3
[3] = Drive group 4

Note: If value = 0:
No terminal assigned, safety function always active.
If value = 255:
No terminal assigned, safety function always inactive.
F-DI: Failsafe Digital Input
SOS: Safe Operating Stop

p10026[0...3] SI SLS input terminal / SI SLS DI

TM54F_MA, TM54F_SL

Can be changed: C2(95)	**Calculated:** -	**Access level:** 3
Data type: Integer16	**Dynamic index:** -	**Func. diagram:** -
P-Group: Safety Integrated	**Units group:** -	**Unit selection:** -
Not for motor type: -	**Scaling:** -	**Expert list:** 1
Min	**Max**	**Factory setting**
0	255	0

Description: Sets the input terminal for SLS (operating mode "control interface").

Value:
0: Statically active
1: F-DI 0 (X521.2/3/6)
2: F-DI 1 (X521.4/5/7)
3: F-DI 2 (X522.1/2/7)
4: F-DI 3 (X522.3/4/8)
5: F-DI 4 (X522.5/6/9)
6: F-DI 5 (X531.2/3/6)
7: F-DI 6 (X531.4/5/7)
8: F-DI 7 (X532.1/2/7)
9: F-DI 8 (X532.3/4/8)
10: F-DI 9 (X532.5/6/9)
255: Statically inact

Index: [0] = Drive group 1
[1] = Drive group 2
[2] = Drive group 3
[3] = Drive group 4

Note: If value = 0:
No terminal assigned, safety function always active.
If value = 255:
No terminal assigned, safety function always inactive.
F-DI: Failsafe Digital Input
SLS: Safely-Limited Speed

p10027[0...3] SI SLS limit bit 0 input terminal / SI SLS lim 0 DI

TM54F_MA, TM54F_SL

Can be changed: C2(95)	**Calculated:** -	**Access level:** 3
Data type: Integer16	**Dynamic index:** -	**Func. diagram:** -
P-Group: Safety Integrated	**Units group:** -	**Unit selection:** -
Not for motor type: -	**Scaling:** -	**Expert list:** 1
Min	**Max**	**Factory setting**
0	255	0

Description: Sets the input terminal for SLS limit bit 0 (operating mode "control interface").

Value:
0: Statically active
1: F-DI 0 (X521.2/3/6)
2: F-DI 1 (X521.4/5/7)
3: F-DI 2 (X522.1/2/7)

© Siemens AG 2012 All Rights Reserved

4: F-DI 3 (X522.3/4/8)
5: F-DI 4 (X522.5/6/9)
6: F-DI 5 (X531.2/3/6)
7: F-DI 6 (X531.4/5/7)
8: F-DI 7 (X532.1/2/7)
9: F-DI 8 (X532.3/4/8)
10: F-DI 9 (X532.5/6/9)
255: Statically inact

Index:
[0] = Drive group 1
[1] = Drive group 2
[2] = Drive group 3
[3] = Drive group 4

Note:
If value = 0:
No terminal assigned, selection bit remains statically at "0".
If value = 255:
No terminal assigned, selection bit remains statically at "1".
F-DI: Failsafe Digital Input
SLS: Safely-Limited Speed

p10028[0...3] SI SLS limit bit 1 input terminal / SI SLS lim 1 DI

TM54F_MA, TM54F_SL

Can be changed: C2(95)	**Calculated:** -	**Access level:** 3
Data type: Integer16	**Dynamic index:** -	**Func. diagram:** -
P-Group: Safety Integrated	**Units group:** -	**Unit selection:** -
Not for motor type: -	**Scaling:** -	**Expert list:** 1
Min	**Max**	**Factory setting**
0	255	0

Description:
Sets the input terminal for SLS limit bit 1 (operating mode "control interface").

Value:
0: Statically active
1: F-DI 0 (X521.2/3/6)
2: F-DI 1 (X521.4/5/7)
3: F-DI 2 (X522.1/2/7)
4: F-DI 3 (X522.3/4/8)
5: F-DI 4 (X522.5/6/9)
6: F-DI 5 (X531.2/3/6)
7: F-DI 6 (X531.4/5/7)
8: F-DI 7 (X532.1/2/7)
9: F-DI 8 (X532.3/4/8)
10: F-DI 9 (X532.5/6/9)
255: Statically inact

Index:
[0] = Drive group 1
[1] = Drive group 2
[2] = Drive group 3
[3] = Drive group 4

Note:
If value = 0:
No terminal assigned, selection bit remains statically at "0".
If value = 255:
No terminal assigned, selection bit remains statically at "1".
F-DI: Failsafe Digital Input
SLS: Safely-Limited Speed

© Siemens AG 2012 All Rights Reserved

p10030[0...3] SI SDI positive input terminal / SI SDI pos DI

TM54F_MA, TM54F_SL	**Can be changed:** C2(95)	**Calculated:** -	**Access level:** 3
	Data type: Integer16	**Dynamic index:** -	**Func. diagram:** -
	P-Group: Safety Integrated	**Units group:** -	**Unit selection:** -
	Not for motor type: -	**Scaling:** -	**Expert list:** 1
	Min	**Max**	**Factory setting**
	0	255	0

Description: Sets the input terminal for SDI positive (operating mode "control interface").

Value:
0: Statically active
1: F-DI 0 (X521.2/3/6)
2: F-DI 1 (X521.4/5/7)
3: F-DI 2 (X522.1/2/7)
4: F-DI 3 (X522.3/4/8)
5: F-DI 4 (X522.5/6/9)
6: F-DI 5 (X531.2/3/6)
7: F-DI 6 (X531.4/5/7)
8: F-DI 7 (X532.1/2/7)
9: F-DI 8 (X532.3/4/8)
10: F-DI 9 (X532.5/6/9)
255: Statically inact

Index:
[0] = Drive group 1
[1] = Drive group 2
[2] = Drive group 3
[3] = Drive group 4

Note:
If value = 0:
No terminal assigned, safety function always active.
If value = 255:
No terminal assigned, safety function always inactive.
F-DI: Failsafe Digital Input
SDI: Safe Direction (safe motion direction)

p10031[0...3] SI SDI negative input terminal / SI SDI neg DI

TM54F_MA, TM54F_SL	**Can be changed:** C2(95)	**Calculated:** -	**Access level:** 3
	Data type: Integer16	**Dynamic index:** -	**Func. diagram:** -
	P-Group: Safety Integrated	**Units group:** -	**Unit selection:** -
	Not for motor type: -	**Scaling:** -	**Expert list:** 1
	Min	**Max**	**Factory setting**
	0	255	0

Description: Sets the input terminal for SDI negative (operating mode "control interface").

Value:
0: Statically active
1: F-DI 0 (X521.2/3/6)
2: F-DI 1 (X521.4/5/7)
3: F-DI 2 (X522.1/2/7)
4: F-DI 3 (X522.3/4/8)
5: F-DI 4 (X522.5/6/9)
6: F-DI 5 (X531.2/3/6)
7: F-DI 6 (X531.4/5/7)
8: F-DI 7 (X532.1/2/7)
9: F-DI 8 (X532.3/4/8)
10: F-DI 9 (X532.5/6/9)
255: Statically inact

Index:
[0] = Drive group 1
[1] = Drive group 2
[2] = Drive group 3
[3] = Drive group 4

© Siemens AG 2012 All Rights Reserved

Note: If value = 0:
No terminal assigned, safety function always active.
If value = 255:
No terminal assigned, safety function always inactive.
F-DI: Failsafe Digital Input
SDI: Safe Direction (safe motion direction)

p10032[0...3] SI SLP input terminal / SI SLP F-DI

TM54F_MA, TM54F_SL

Can be changed: C2(95)	**Calculated:** -	**Access level:** 3
Data type: Integer16	**Dynamic index:** -	**Func. diagram:** -
P-Group: Safety Integrated	**Units group:** -	**Unit selection:** -
Not for motor type: -	**Scaling:** -	**Expert list:** 1
Min	**Max**	**Factory setting**
0	255	0

Description: Sets the input terminal for the "SLP" function

Value:
0: Statically active
1: F-DI 0 (X521.2/3/6)
2: F-DI 1 (X521.4/5/7)
3: F-DI 2 (X522.1/2/7)
4: F-DI 3 (X522.3/4/8)
5: F-DI 4 (X522.5/6/9)
6: F-DI 5 (X531.2/3/6)
7: F-DI 6 (X531.4/5/7)
8: F-DI 7 (X532.1/2/7)
9: F-DI 8 (X532.3/4/8)
10: F-DI 9 (X532.5/6/9)
255: Statically inact

Index:
[0] = Drive group 1
[1] = Drive group 2
[2] = Drive group 3
[3] = Drive group 4

Note: If value = 0:
No terminal assigned, safety function always active.
If value = 255:
No terminal assigned, safety function always inactive.
F-DI: Failsafe Digital Input
SLP: Safely-Limited Position

p10033[0...3] SI SLP select input terminal / SI SLP sel F-DI

TM54F_MA, TM54F_SL

Can be changed: C2(95)	**Calculated:** -	**Access level:** 3
Data type: Integer16	**Dynamic index:** -	**Func. diagram:** -
P-Group: Safety Integrated	**Units group:** -	**Unit selection:** -
Not for motor type: -	**Scaling:** -	**Expert list:** 1
Min	**Max**	**Factory setting**
0	255	0

Description: Sets the input terminal for selecting the position area for "SLP".

Value:
0: Statically active
1: F-DI 0 (X521.2/3/6)
2: F-DI 1 (X521.4/5/7)
3: F-DI 2 (X522.1/2/7)
4: F-DI 3 (X522.3/4/8)
5: F-DI 4 (X522.5/6/9)
6: F-DI 5 (X531.2/3/6)
7: F-DI 6 (X531.4/5/7)
8: F-DI 7 (X532.1/2/7)
9: F-DI 8 (X532.3/4/8)

© Siemens AG 2012 All Rights Reserved

10: F-DI 9 (X532.5/6/9)
255: Statically inact

Index: [0] = Drive group 1
[1] = Drive group 2
[2] = Drive group 3
[3] = Drive group 4

Note: If value = 0:
No terminal assigned, selection bit remains statically at "0".
If value = 255:
No terminal assigned, selection bit remains statically at "1".
F-DI: Failsafe Digital Input
SLP: Safely-Limited Position

p10036[0...3] SI special operating mode input terminal / SI spec op DI

TM54F_MA, TM54F_SL

Can be changed: C2(95)	**Calculated:** -	**Access level:** 4
Data type: Integer16	**Dynamic index:** -	**Func. diagram:** -
P-Group: Safety Integrated	**Units group:** -	**Unit selection:** -
Not for motor type: -	**Scaling:** -	**Expert list:** 1
Min	**Max**	**Factory setting**
0	255	0

Description: Sets the input terminal for "special operating mode" (operating mode "function interface").

Value:
0: Statically active
1: F-DI 0 (X521.2/3/6)
2: F-DI 1 (X521.4/5/7)
3: F-DI 2 (X522.1/2/7)
4: F-DI 3 (X522.3/4/8)
5: F-DI 4 (X522.5/6/9)
6: F-DI 5 (X531.2/3/6)
7: F-DI 6 (X531.4/5/7)
8: F-DI 7 (X532.1/2/7)
9: F-DI 8 (X532.3/4/8)
10: F-DI 9 (X532.5/6/9)
255: Statically inact

Index: [0] = Drive group 1
[1] = Drive group 2
[2] = Drive group 3
[3] = Drive group 4

Note: Parameter being prepared. For this firmware version, the function interface is not supported.
If value = 0:
No terminal assigned, static special operation.
If value = 255:
No terminal assigned, static normal operation.

p10037[0...3] SI agreement input terminal / SI agreement DI

TM54F_MA, TM54F_SL

Can be changed: C2(95)	**Calculated:** -	**Access level:** 4
Data type: Integer16	**Dynamic index:** -	**Func. diagram:** -
P-Group: Safety Integrated	**Units group:** -	**Unit selection:** -
Not for motor type: -	**Scaling:** -	**Expert list:** 1
Min	**Max**	**Factory setting**
0	255	0

Description: Sets the input terminal for "agreement" (operating mode "function interface").

Value:
0: Statically active
1: F-DI 0 (X521.2/3/6)
2: F-DI 1 (X521.4/5/7)
3: F-DI 2 (X522.1/2/7)
4: F-DI 3 (X522.3/4/8)
5: F-DI 4 (X522.5/6/9)

© Siemens AG 2012 All Rights Reserved

6: F-DI 5 (X531.2/3/6)
7: F-DI 6 (X531.4/5/7)
8: F-DI 7 (X532.1/2/7)
9: F-DI 8 (X532.3/4/8)
10: F-DI 9 (X532.5/6/9)
255: Statically inact

Index: [0] = Drive group 1
[1] = Drive group 2
[2] = Drive group 3
[3] = Drive group 4

Note: Parameter being prepared. For this firmware version, the function interface is not supported.
If value = 0:
No terminal assigned, no static agreement.
If value = 255:
No terminal assigned, static agreement.

p10038[0...3] SI Emergency Stop input terminal / SI Emer Stop DI

TM54F_MA, TM54F_SL

Can be changed: C2(95)	**Calculated:** -	**Access level:** 4
Data type: Integer16	**Dynamic index:** -	**Func. diagram:** -
P-Group: Safety Integrated	**Units group:** -	**Unit selection:** -
Not for motor type: -	**Scaling:** -	**Expert list:** 1
Min	**Max**	**Factory setting**
0	255	0

Description: Sets the input terminal for input "Emergency Stop" (operating mode "function interface").
The behavior of this input signal is set in p10021.

Value:
0: Statically active
1: F-DI 0 (X521.2/3/6)
2: F-DI 1 (X521.4/5/7)
3: F-DI 2 (X522.1/2/7)
4: F-DI 3 (X522.3/4/8)
5: F-DI 4 (X522.5/6/9)
6: F-DI 5 (X531.2/3/6)
7: F-DI 6 (X531.4/5/7)
8: F-DI 7 (X532.1/2/7)
9: F-DI 8 (X532.3/4/8)
10: F-DI 9 (X532.5/6/9)
255: Statically inact

Index: [0] = Drive group 1
[1] = Drive group 2
[2] = Drive group 3
[3] = Drive group 4

Dependency: Refer to: p10008, p10021

Note: Parameter being prepared. For this firmware version, the function interface is not supported.
If value = 0:
No terminal assigned, "Emergency Stop" statically active.
If value = 255:
No terminal assigned, no "Emergency Stop" statically active.

© Siemens AG 2012 All Rights Reserved

p10039[0...3] SI Safe State signal selection / SI Safe State Sel

TM54F_MA, TM54F_SL

Can be changed: C2(95)	**Calculated:** -	**Access level:** 3
Data type: Unsigned32	**Dynamic index:** -	**Func. diagram:** 2856
P-Group: Safety Integrated	**Units group:** -	**Unit selection:** -
Not for motor type: -	**Scaling:** -	**Expert list:** 1
Min	**Max**	**Factory setting**
-	-	0000 0001 bin

Index:
[0] = Drive group 1
[1] = Drive group 2
[2] = Drive group 3
[3] = Drive group 4

Bit field:

Bit	Signal name	1 signal	0 signal	FP
00	Power_removed	Selected	Not selected	-
01	SS1_active	Selected	Not selected	-
02	SS2_active	Selected	Not selected	-
03	SOS_active	Selected	Not selected	-
04	SLS_active	Selected	Not selected	-
05	SDI_pos_active	Selected	Not selected	-
06	SDI_neg_active	Selected	Not selected	-
07	SLP_active	Selected	Not selected	-

p10040 SI F-DI input mode / SI F-DI inp_mode

TM54F_MA, TM54F_SL

Can be changed: C2(95)	**Calculated:** -	**Access level:** 3
Data type: Unsigned32	**Dynamic index:** -	**Func. diagram:** -
P-Group: Safety Integrated	**Units group:** -	**Unit selection:** -
Not for motor type: -	**Scaling:** -	**Expert list:** 1
Min	**Max**	**Factory setting**
-	-	0000 0000 0000 0000 bin

Description: Sets the input mode for the safety digital inputs (F-DI).

Bit field:

Bit	Signal name	1 signal	0 signal	FP
00	F-DI 0, DI 1+ (X521.3)	NO contact	NC contact	2850
01	F-DI 1, DI 3+ (X521.5)	NO contact	NC contact	2850
02	F-DI 2, DI 5+ (X522.2)	NO contact	NC contact	2850
03	F-DI 3, DI 7+ (X522.4)	NO contact	NC contact	2850
04	F-DI 4, DI 9+ (X522.6)	NO contact	NC contact	2850
05	F-DI 5, DI 11+ (X531.3)	NO contact	NC contact	2851
06	F-DI 6, DI 13+ (X531.5)	NO contact	NC contact	2851
07	F-DI 7, DI 15+ (X532.2)	NO contact	NC contact	2851
08	F-DI 8, DI 17+ (X532.4)	NO contact	NC contact	2851
09	F-DI 9, DI 19+ (X532.6)	NO contact	NC contact	2851

Note: Only an NC contact can be connected for the safety digital inputs not listed.

p10041 SI F-DI enable for test / SI F-DI enab test

TM54F_MA, TM54F_SL

Can be changed: C2(95)	**Calculated:** -	**Access level:** 3
Data type: Unsigned32	**Dynamic index:** -	**Func. diagram:** 2848
P-Group: Safety Integrated	**Units group:** -	**Unit selection:** -
Not for motor type: -	**Scaling:** -	**Expert list:** 1
Min	**Max**	**Factory setting**
-	-	0000 0000 0000 0000 bin

Description: Enable signal for the integration of F-DI in the test (forced checking procedure) of the sensor power supply.

Bit field:

Bit	Signal name	1 signal	0 signal	FP
00	F-DI 0, power supply L1+	Test active	No test	-
01	F-DI 1, power supply L1+	Test active	No test	-
02	F-DI 2, power supply L1+	Test active	No test	-
03	F-DI 3, power supply L1+	Test active	No test	-

© Siemens AG 2012 All Rights Reserved

04	F-DI 4, power supply L1+	Test active	No test	-
05	F-DI 5, power supply L2+	Test active	No test	-
06	F-DI 6, power supply L2+	Test active	No test	-
07	F-DI 7, power supply L2+	Test active	No test	-
08	F-DI 8, power supply L2+	Test active	No test	-
09	F-DI 9, power supply L2+	Test active	No test	-

Note: F-DI: Failsafe Digital Input

p10042[0...5] SI F-DO 0 signal sources / SI F-DO 0 S_src

TM54F_MA, TM54F_SL

Can be changed: C2(95)	**Calculated:** -	**Access level:** 3
Data type: Integer16	**Dynamic index:** -	**Func. diagram:** 2857
P-Group: Safety Integrated	**Units group:** -	**Unit selection:** -
Not for motor type: -	**Scaling:** -	**Expert list:** 1
Min	**Max**	**Factory setting**
0	783	0

Description: Sets the signal sources for F-DO 0.

The 6 signal sources in p10042[0...5] are AND'ed and the result is output at F-DO 0.

Value:

0: No function
1: Drive group 1 STO active
2: Drive group 1 SS1 active
3: Drive group 1 SS2 active
4: Drive group 1 SOS active
5: Drive group 1 SLS active
6: Drive group 1 SSM feedback signal active
7: Drive group 1 safe state
8: Drive group 1 SOS selected
9: Drive group 1 internal event
10: Drive group 1 active SLS stage bit 0
11: Drive group 1 active SLS stage bit 1
12: Drive group 1 SDI positive active
13: Drive group 1 SDI negative active
14: Drive group 1 SLP active
15: Drive group 1 active SLP area
257: Drive group 2 STO active
258: Drive group 2 SS1 active
259: Drive group 2 SS2 active
260: Drive group 2 SOS active
261: Drive group 2 SLS active
262: Drive group 2 SSM feedback signal active
263: Drive group 2 safe state
264: Drive group 2 SOS selected
265: Drive group 2 internal event
266: Drive group 2 active SLS stage bit 0
267: Drive group 2 active SLS stage bit 1
268: Drive group 2 SDI positive active
269: Drive group 2 SDI negative active
270: Drive group 2 SLP active
271: Drive group 2 active SLP area
513: Drive group 3 STO active
514: Drive group 3 SS1 active
515: Drive group 3 SS2 active
516: Drive group 3 SOS active
517: Drive group 3 SLS active
518: Drive group 3 SSM feedback signal active
519: Drive group 3 safe state
520: Drive group 3 SOS selected
521: Drive group 3 internal event
522: Drive group 3 active SLS stage bit 0
523: Drive group 3 active SLS stage bit 1
524: Drive group 3 SDI positive active
525: Drive group 3 SDI negative active

© Siemens AG 2012 All Rights Reserved

526: Drive group 3 SLP active
527: Drive group 3 active SLP area
769: Drive group 4 STO active
770: Drive group 4 SS1 active
771: Drive group 4 SS2 active
772: Drive group 4 SOS active
773: Drive group 4 SLS active
774: Drive group 4 SSM feedback signal active
775: Drive group 4 safe state
776: Drive group 4 SOS selected
777: Drive group 4 internal event
778: Drive group 4 active SLS stage bit 0
779: Drive group 4 active SLS stage bit 1
780: Drive group 4 SDI positive active
781: Drive group 4 SDI negative active
782: Drive group 4 SLP active
783: Drive group 4 active SLP area

Index:
[0] = AND logic operation input 1
[1] = AND logic operation input 2
[2] = AND logic operation input 3
[3] = AND logic operation input 4
[4] = AND logic operation input 5
[5] = AND logic operation input 6

Note: F-DO: Failsafe Digital Output

p10043[0...5] SI F-DO 1 signal sources / SI F-DO 1 S_src

TM54F_MA, TM54F_SL

Can be changed: C2(95)	**Calculated:** -	**Access level:** 3
Data type: Integer16	**Dynamic index:** -	**Func. diagram:** 2857
P-Group: Safety Integrated	**Units group:** -	**Unit selection:** -
Not for motor type: -	**Scaling:** -	**Expert list:** 1
Min	**Max**	**Factory setting**
0	783	0

Description: Sets the signal sources for F-DO 1.
The 6 signal sources in p10043[0...5] are AND'ed and the result is output at F-DO 1.

Value:
0: No function
1: Drive group 1 STO active
2: Drive group 1 SS1 active
3: Drive group 1 SS2 active
4: Drive group 1 SOS active
5: Drive group 1 SLS active
6: Drive group 1 SSM feedback signal active
7: Drive group 1 safe state
8: Drive group 1 SOS selected
9: Drive group 1 internal event
10: Drive group 1 active SLS stage bit 0
11: Drive group 1 active SLS stage bit 1
12: Drive group 1 SDI positive active
13: Drive group 1 SDI negative active
14: Drive group 1 SLP active
15: Drive group 1 active SLP area
257: Drive group 2 STO active
258: Drive group 2 SS1 active
259: Drive group 2 SS2 active
260: Drive group 2 SOS active
261: Drive group 2 SLS active
262: Drive group 2 SSM feedback signal active
263: Drive group 2 safe state
264: Drive group 2 SOS selected
265: Drive group 2 internal event
266: Drive group 2 active SLS stage bit 0
267: Drive group 2 active SLS stage bit 1

© Siemens AG 2012 All Rights Reserved

268: Drive group 2 SDI positive active
269: Drive group 2 SDI negative active
270: Drive group 2 SLP active
271: Drive group 2 active SLP area
513: Drive group 3 STO active
514: Drive group 3 SS1 active
515: Drive group 3 SS2 active
516: Drive group 3 SOS active
517: Drive group 3 SLS active
518: Drive group 3 SSM feedback signal active
519: Drive group 3 safe state
520: Drive group 3 SOS selected
521: Drive group 3 internal event
522: Drive group 3 active SLS stage bit 0
523: Drive group 3 active SLS stage bit 1
524: Drive group 3 SDI positive active
525: Drive group 3 SDI negative active
526: Drive group 3 SLP active
527: Drive group 3 active SLP area
769: Drive group 4 STO active
770: Drive group 4 SS1 active
771: Drive group 4 SS2 active
772: Drive group 4 SOS active
773: Drive group 4 SLS active
774: Drive group 4 SSM feedback signal active
775: Drive group 4 safe state
776: Drive group 4 SOS selected
777: Drive group 4 internal event
778: Drive group 4 active SLS stage bit 0
779: Drive group 4 active SLS stage bit 1
780: Drive group 4 SDI positive active
781: Drive group 4 SDI negative active
782: Drive group 4 SLP active
783: Drive group 4 active SLP area

Index: [0] = AND logic operation input 1
[1] = AND logic operation input 2
[2] = AND logic operation input 3
[3] = AND logic operation input 4
[4] = AND logic operation input 5
[5] = AND logic operation input 6

Note: F-DO: Failsafe Digital Output

p10044[0...5] SI F-DO 2 signal sources / SI F-DO 2 S_src

TM54F_MA, TM54F_SL

Can be changed: C2(95)	**Calculated:** -	**Access level:** 3
Data type: Integer16	**Dynamic index:** -	**Func. diagram:** 2857
P-Group: Safety Integrated	**Units group:** -	**Unit selection:** -
Not for motor type: -	**Scaling:** -	**Expert list:** 1
Min	**Max**	**Factory setting**
0	783	0

Description: Sets the signal sources for F-DO 2.
The 6 signal sources in p10044[0...5] are AND'ed and the result is output at F-DO 2.

Value:
0: No function
1: Drive group 1 STO active
2: Drive group 1 SS1 active
3: Drive group 1 SS2 active
4: Drive group 1 SOS active
5: Drive group 1 SLS active
6: Drive group 1 SSM feedback signal active
7: Drive group 1 safe state
8: Drive group 1 SOS selected
9: Drive group 1 internal event

© Siemens AG 2012 All Rights Reserved

10: Drive group 1 active SLS stage bit 0
11: Drive group 1 active SLS stage bit 1
12: Drive group 1 SDI positive active
13: Drive group 1 SDI negative active
14: Drive group 1 SLP active
15: Drive group 1 active SLP area
257: Drive group 2 STO active
258: Drive group 2 SS1 active
259: Drive group 2 SS2 active
260: Drive group 2 SOS active
261: Drive group 2 SLS active
262: Drive group 2 SSM feedback signal active
263: Drive group 2 safe state
264: Drive group 2 SOS selected
265: Drive group 2 internal event
266: Drive group 2 active SLS stage bit 0
267: Drive group 2 active SLS stage bit 1
268: Drive group 2 SDI positive active
269: Drive group 2 SDI negative active
270: Drive group 2 SLP active
271: Drive group 2 active SLP area
513: Drive group 3 STO active
514: Drive group 3 SS1 active
515: Drive group 3 SS2 active
516: Drive group 3 SOS active
517: Drive group 3 SLS active
518: Drive group 3 SSM feedback signal active
519: Drive group 3 safe state
520: Drive group 3 SOS selected
521: Drive group 3 internal event
522: Drive group 3 active SLS stage bit 0
523: Drive group 3 active SLS stage bit 1
524: Drive group 3 SDI positive active
525: Drive group 3 SDI negative active
526: Drive group 3 SLP active
527: Drive group 3 active SLP area
769: Drive group 4 STO active
770: Drive group 4 SS1 active
771: Drive group 4 SS2 active
772: Drive group 4 SOS active
773: Drive group 4 SLS active
774: Drive group 4 SSM feedback signal active
775: Drive group 4 safe state
776: Drive group 4 SOS selected
777: Drive group 4 internal event
778: Drive group 4 active SLS stage bit 0
779: Drive group 4 active SLS stage bit 1
780: Drive group 4 SDI positive active
781: Drive group 4 SDI negative active
782: Drive group 4 SLP active
783: Drive group 4 active SLP area

Index: [0] = AND logic operation input 1
[1] = AND logic operation input 2
[2] = AND logic operation input 3
[3] = AND logic operation input 4
[4] = AND logic operation input 5
[5] = AND logic operation input 6

Note: F-DO: Failsafe Digital Output

© Siemens AG 2012 All Rights Reserved

p10045[0...5] SI F-DO 3 signal sources / SI F-DO 3 S_src

TM54F_MA, TM54F_SL	**Can be changed:** C2(95)	**Calculated:** -	**Access level:** 3
	Data type: Integer16	**Dynamic index:** -	**Func. diagram:** 2857
	P-Group: Safety Integrated	**Units group:** -	**Unit selection:** -
	Not for motor type: -	**Scaling:** -	**Expert list:** 1
	Min	**Max**	**Factory setting**
	0	783	0

Description: Sets the signal sources for F-DO 3.

The 6 signal sources in p10045[0...5] are AND'ed and the result is output at F-DO 3.

Value:

0: No function
1: Drive group 1 STO active
2: Drive group 1 SS1 active
3: Drive group 1 SS2 active
4: Drive group 1 SOS active
5: Drive group 1 SLS active
6: Drive group 1 SSM feedback signal active
7: Drive group 1 safe state
8: Drive group 1 SOS selected
9: Drive group 1 internal event
10: Drive group 1 active SLS stage bit 0
11: Drive group 1 active SLS stage bit 1
12: Drive group 1 SDI positive active
13: Drive group 1 SDI negative active
14: Drive group 1 SLP active
15: Drive group 1 active SLP area
257: Drive group 2 STO active
258: Drive group 2 SS1 active
259: Drive group 2 SS2 active
260: Drive group 2 SOS active
261: Drive group 2 SLS active
262: Drive group 2 SSM feedback signal active
263: Drive group 2 safe state
264: Drive group 2 SOS selected
265: Drive group 2 internal event
266: Drive group 2 active SLS stage bit 0
267: Drive group 2 active SLS stage bit 1
268: Drive group 2 SDI positive active
269: Drive group 2 SDI negative active
270: Drive group 2 SLP active
271: Drive group 2 active SLP area
513: Drive group 3 STO active
514: Drive group 3 SS1 active
515: Drive group 3 SS2 active
516: Drive group 3 SOS active
517: Drive group 3 SLS active
518: Drive group 3 SSM feedback signal active
519: Drive group 3 safe state
520: Drive group 3 SOS selected
521: Drive group 3 internal event
522: Drive group 3 active SLS stage bit 0
523: Drive group 3 active SLS stage bit 1
524: Drive group 3 SDI positive active
525: Drive group 3 SDI negative active
526: Drive group 3 SLP active
527: Drive group 3 active SLP area
769: Drive group 4 STO active
770: Drive group 4 SS1 active
771: Drive group 4 SS2 active
772: Drive group 4 SOS active
773: Drive group 4 SLS active

© Siemens AG 2012 All Rights Reserved

774: Drive group 4 SSM feedback signal active
775: Drive group 4 safe state
776: Drive group 4 SOS selected
777: Drive group 4 internal event
778: Drive group 4 active SLS stage bit 0
779: Drive group 4 active SLS stage bit 1
780: Drive group 4 SDI positive active
781: Drive group 4 SDI negative active
782: Drive group 4 SLP active
783: Drive group 4 active SLP area

Index: [0] = AND logic operation input 1
[1] = AND logic operation input 2
[2] = AND logic operation input 3
[3] = AND logic operation input 4
[4] = AND logic operation input 5
[5] = AND logic operation input 6

Note: F-DO: Failsafe Digital Output

p10046 SI F-DO feedback signal input activation / SI F-DO FS act

TM54F_MA, TM54F_SL

Can be changed: C2(95)	**Calculated:** -	**Access level:** 3
Data type: Unsigned32	**Dynamic index:** -	**Func. diagram:** 2848
P-Group: Safety Integrated	**Units group:** -	**Unit selection:** -
Not for motor type: -	**Scaling:** -	**Expert list:** 1
Min	**Max**	**Factory setting**
-	-	0000 bin

Description: Activates the readback input for the safety digital outputs (F-DO)
The test mode for the particular safety digital output is set in p10047.

Bit field:

Bit	Signal name	1 signal	0 signal	FP
00	Read back F-DO 0	Test active	No test	-
01	Read back F-DO 1	Test active	No test	-
02	Read back F-DO 2	Test active	No test	-
03	Read back F-DO 3	Test active	No test	-

Dependency: Refer to: p10047

Note: F-DO: Failsafe Digital Output

p10047[0...3] SI F-DO test stop mode / SI F-DO test mode

TM54F_MA, TM54F_SL

Can be changed: C2(95)	**Calculated:** -	**Access level:** 3
Data type: Integer16	**Dynamic index:** -	**Func. diagram:** -
P-Group: Safety Integrated	**Units group:** -	**Unit selection:** -
Not for motor type: -	**Scaling:** -	**Expert list:** 1
Min	**Max**	**Factory setting**
0001 bin	0011 bin	0010 bin

Description: Sets the test stop mode for the particular safety digital output (F-DO)
Index 0: F-DO 0
Index 1: F-DO 1
Index 2: F-DO 2
Index 3: F-DO 3

Value:
1: Test mode 1 evaluation of int. diagnostic signal (passive load)
2: Test mode 2 read back F-DO in DI (relay circuit)
3: Test mode 3 read back F-DO in DI (actuator with feedback signal)

Note: If value = 1:
When this test mode is being used, and excessive resistance of the load between DO+ and DO- can lead to problems during the test stop. It is therefore important to make sure that the load resistance at an individual F-DO does not exceed 10 kOhm.

© Siemens AG 2012 All Rights Reserved

r10051.0...9 CO/BO: SI digital inputs status / SI DI status

TM54F_MA, TM54F_SL

Can be changed: -	**Calculated:** -	**Access level:** 3
Data type: Unsigned32	**Dynamic index:** -	**Func. diagram:** 2850, 2851
P-Group: Safety Integrated	**Units group:** -	**Unit selection:** -
Not for motor type: -	**Scaling:** -	**Expert list:** 1
Min	**Max**	**Factory setting**
-	-	-

Description: Displays the single-channel, logical, and debounced status of the safety digital inputs F-DI 0 ... 9 at Terminal Module 54F (TM54F).

Bit field:

Bit	Signal name	1 signal	0 signal	FP
00	F-DI 0	Logical 1	Logical 0	2850
01	F-DI 1	Logical 1	Logical 0	2850
02	F-DI 2	Logical 1	Logical 0	2850
03	F-DI 3	Logical 1	Logical 0	2850
04	F-DI 4	Logical 1	Logical 0	2850
05	F-DI 5	Logical 1	Logical 0	2851
06	F-DI 6	Logical 1	Logical 0	2851
07	F-DI 7	Logical 1	Logical 0	2851
08	F-DI 8	Logical 1	Logical 0	2851
09	F-DI 9	Logical 1	Logical 0	2851

Dependency: Refer to: p10017, p10040

Note: If a safety function is assigned to an input (e.g. via p10022), then the following applies:

- logical "0": Safety function is selected
- logical "1": Safety function is de-selected

The interrelationship between the logical level and the external voltage level at the input depends on the parameterization (refer to p10040) of the input as either NC or NO contact and is aligned to the use of a safety function:

With 24 V at the input, NC contacts have a logical "1" level, for 0 V at the input, a logical "0" level.

This means that an NC/NC contact parameterization of 0 V at both inputs of the F-DI selects the safety function, for 24 V at both inputs, de-selects the safety function.

With 24 V at the input, NO contacts have a logical "0" level, for 0 V at the input, a logical "1" level.

This means that for an NC/NO contact parameterization, the level 0 V/24 V selects the safety function, the level 24 V/0 V de-selects the safety function.

F-DI: Failsafe Digital Input

r10052.0...3 CO/BO: SI digital outputs status / SI DO status

TM54F_MA, TM54F_SL

Can be changed: -	**Calculated:** -	**Access level:** 3
Data type: Unsigned32	**Dynamic index:** -	**Func. diagram:** -
P-Group: Safety Integrated	**Units group:** -	**Unit selection:** -
Not for motor type: -	**Scaling:** -	**Expert list:** 1
Min	**Max**	**Factory setting**
-	-	-

Description: Displays the status of the digital outputs at the Terminal Module 54F (TM54F).

TM54F_MA (master): display of DO-

TM54F_SL (slave): display of DO+

Bit field:

Bit	Signal name	1 signal	0 signal	FP
00	DO 0	High	Low	2853
01	DO 1	High	Low	2853
02	DO 2	High	Low	2853
03	DO 3	High	Low	2853

Note: F-DO: Failsafe Digital Output

© Siemens AG 2012 All Rights Reserved

r10053.0...3 CO/BO: SI digital inputs 20 ... 23 status / SI DI 20...23 stat

TM54F_SL

Can be changed: -	**Calculated:** -	**Access level:** 3
Data type: Unsigned32	**Dynamic index:** -	**Func. diagram:** 2848
P-Group: Safety Integrated	**Units group:** -	**Unit selection:** -
Not for motor type: -	**Scaling:** -	**Expert list:** 1
Min	**Max**	**Factory setting**
-	-	-

Description: Displays the status of the digital inputs at the Terminal Module 54F (TM54F).

Bit field:

Bit	Signal name	1 signal	0 signal	FP
00	DI 20	High	Low	2853
01	DI 21	High	Low	2853
02	DI 22	High	Low	2853
03	DI 23	High	Low	2853

r10054 SI TM54F failsafe events active / SI failsafe act

TM54F_MA, TM54F_SL

Can be changed: -	**Calculated:** -	**Access level:** 3
Data type: Unsigned32	**Dynamic index:** -	**Func. diagram:** -
P-Group: Safety Integrated	**Units group:** -	**Unit selection:** -
Not for motor type: -	**Scaling:** -	**Expert list:** 1
Min	**Max**	**Factory setting**
-	-	-

Description: Displays the events that lead to the transfer of failsafe signals to all drives assigned to the TM54F. If the second channel of the TM54F transmits failsafe signals, then these are synchronized to the other channel.

Possibilities of resolving the situation:

- error during test stop: correctly perform the test stop.
- internal software error: no possibility of resolving this problem, POWER ON.
- internal synchronization problem: no possibility of resolving this problem, POWER ON.
- all other causes: remove the cause of the error and carry out a safety-relevant acknowledgement (p10006).

Bit field:

Bit	Signal name	1 signal	0 signal	FP
00	Commissioning mode active (p0010 = 95)	Yes	No	2847
01	Checksum error of the safety parameters	Yes	No	-
02	Internal synchronization problem within TM54F	Yes	No	-
03	Internal software error	Yes	No	-
04	Overvoltage in the TM54F	Yes	No	-
05	Undervoltage in the TM54F	Yes	No	-
06	Error at test stop	Yes	No	-
07	Error for crosswise data comparison within TM54F	Yes	No	-
08	Overtemperature in the TM54F	Yes	No	-
31	Failsafe events active on another channel	Yes	No	-

r10055 SI TM54F communication status drive-specific / SI comm_stat drv

TM54F_MA, TM54F_SL

Can be changed: -	**Calculated:** -	**Access level:** 3
Data type: Unsigned32	**Dynamic index:** -	**Func. diagram:** 2846
P-Group: Safety Integrated	**Units group:** -	**Unit selection:** -
Not for motor type: -	**Scaling:** -	**Expert list:** 1
Min	**Max**	**Factory setting**
-	-	-

Description: Displays the communication status of the individual drives with the the Terminal Module 54F (TM54F).

For r10055 = 0, the following applies:

All drives assigned in p10010 communicate with the TM54F.

© Siemens AG 2012 All Rights Reserved

Bit field:	Bit	Signal name	1 signal	0 signal	FP
	00	Communication between drive 1 and TM54F	Not configured	Configured	-
	01	Communication between drive 2 and TM54F	Not configured	Configured	-
	02	Communication between drive 3 and TM54F	Not configured	Configured	-
	03	Communication between drive 4 and TM54F	Not configured	Configured	-
	04	Communication between drive 5 and TM54F	Not configured	Configured	-
	05	Communication between drive 6 and TM54F	Not configured	Configured	-

r10056.0 CO/BO: SI Status / SI stat

TM54F_MA

Can be changed: -	**Calculated:** -	**Access level:** 3
Data type: Unsigned32	**Dynamic index:** -	**Func. diagram:** -
P-Group: Safety Integrated	**Units group:** -	**Unit selection:** -
Not for motor type: -	**Scaling:** -	**Expert list:** 1
Min	**Max**	**Factory setting**
-	-	-

Description: Displays the status of the Terminal Module 54F (TM54F).

Bit field:	Bit	Signal name	1 signal	0 signal	FP
	00	Test stop status	Active	Inactive	-

p10061 SI password input TM54F / SI password inp

TM54F_MA, TM54F_SL

Can be changed: T	**Calculated:** -	**Access level:** 3
Data type: Unsigned32	**Dynamic index:** -	**Func. diagram:** 2847
P-Group: Safety Integrated	**Units group:** -	**Unit selection:** -
Not for motor type: -	**Scaling:** -	**Expert list:** 1
Min	**Max**	**Factory setting**
0000 hex	FFFF FFFF hex	0000 hex

Description: Enters the Safety Integrated password for the Terminal Module 54F (TM54F).
This password is required to change the safety-relevant parameters.

p10062 SI password new TM54F / SI password new

TM54F_MA, TM54F_SL

Can be changed: C2(95)	**Calculated:** -	**Access level:** 3
Data type: Unsigned32	**Dynamic index:** -	**Func. diagram:** 2847
P-Group: Safety Integrated	**Units group:** -	**Unit selection:** -
Not for motor type: -	**Scaling:** -	**Expert list:** 1
Min	**Max**	**Factory setting**
0000 hex	FFFF FFFF hex	0000 hex

Description: Enters the new Safety Integrated password for the Terminal Module 54F (TM54F).

Dependency: A change made to the Safety Integrated password must be acknowledged in the following parameter:
Refer to: p10063

p10063 SI password acknowledgement TM54F / SI ackn password

TM54F_MA, TM54F_SL

Can be changed: C2(95)	**Calculated:** -	**Access level:** 3
Data type: Unsigned32	**Dynamic index:** -	**Func. diagram:** 2847
P-Group: Safety Integrated	**Units group:** -	**Unit selection:** -
Not for motor type: -	**Scaling:** -	**Expert list:** 1
Min	**Max**	**Factory setting**
0000 hex	FFFF FFFF hex	0000 hex

Description: Acknowledgement of the new Safety Integrated password for the Terminal Module 54F (TM54F).

© Siemens AG 2012 All Rights Reserved

Dependency: Refer to: p10062

Note: The new password entered into p10062 must be re-entered in order to acknowledge.
p10062 = p10063 = 0 is automatically set after the new Safety Integrated password has been successfully acknowledged.

r10090[0...3] SI TM54F version / SI TM54F version

TM54F_MA, TM54F_SL

Can be changed: -	**Calculated:** -	**Access level:** 3
Data type: Unsigned16	**Dynamic index:** -	**Func. diagram:** -
P-Group: Safety Integrated	**Units group:** -	**Unit selection:** -
Not for motor type: -	**Scaling:** -	**Expert list:** 1
Min	**Max**	**Factory setting**
-	-	-

Description: Displays the Safety Integrated version for the Terminal Module 54F (TM54F).

Index:
[0] = Safety Version (major release)
[1] = Safety Version (minor release)
[2] = Safety Version (baselevel or patch)
[3] = Safety Version (hotfix)

Dependency: Refer to: r9390, r9590, r9770, r9870, r9890

Note: Example:
r10090[0] = 2, r10090[1] = 60, r10090[2] = 1, r10090[3] = 0 --> SI TM54F version V02.60.01.00

p60022 PROFIsafe telegram selection / Ps telegram_sel

VECTOR_G

Can be changed: T	**Calculated:** -	**Access level:** 3
Data type: Unsigned16	**Dynamic index:** -	**Func. diagram:** -
P-Group: Safety Integrated	**Units group:** -	**Unit selection:** -
Not for motor type: -	**Scaling:** -	**Expert list:** 1
Min	**Max**	**Factory setting**
0	902	0

Description: Sets the PROFIsafe telegram number.

Value:
0: No PROFIsafe telegram selected
30: PROFIsafe standard telegram 30, PZD-1/1
31: PROFIsafe standard telegram 31, PZD-2/2
901: PROFIsafe SIEMENS telegram 901, PZD-3/5
902: PROFIsafe SIEMENS telegram 902, PZD-3/6

Dependency: Refer to: p9611, p9811

r61000[0...239] PROFINET Name of Station / PN Name of Station

CU_G130_DP (PROFINET), CU_G130_PN, CU_G150_DP (PROFINET), CU_G150_PN

Can be changed: -	**Calculated:** -	**Access level:** 3
Data type: Unsigned8	**Dynamic index:** -	**Func. diagram:** -
P-Group: -	**Units group:** -	**Unit selection:** -
Not for motor type: -	**Scaling:** -	**Expert list:** 1
Min	**Max**	**Factory setting**
-	-	-

Description: Displays PROFINET Name of Station.

Notice: An ASCII table (excerpt) can be found, for example, in the appendix to the List Manual.

© Siemens AG 2012 All Rights Reserved

r61001[0...3] PROFINET IP of Station / PN IP of Station

CU_G130_DP (PROFINET), CU_G130_PN, CU_G150_DP (PROFINET), CU_G150_PN	**Can be changed:** -	**Calculated:** -	**Access level:** 3
	Data type: Unsigned8	**Dynamic index:** -	**Func. diagram:** -
	P-Group: -	**Units group:** -	**Unit selection:** -
	Not for motor type: -	**Scaling:** -	**Expert list:** 1
	Min	**Max**	**Factory setting**
	-	-	-

Description: Displays PROFINET IP of Station.

© Siemens AG 2012 All Rights Reserved

1.3 Parameters for data sets

1.3.1 Parameters for command data sets (CDS)

The following list contains the parameters that are dependent on the command data sets.

Product: SINAMICS G130/G150, Version: 4502400, Language: eng, Type: CDS

p0641[0...n]	CI: Current limit, variable / Curr lim var
p0700[0...n]	Macro Binector Input (BI) / Macro BI
p0820[0...n]	BI: Drive Data Set selection DDS bit 0 / DDS select., bit 0
p0821[0...n]	BI: Drive Data Set selection DDS bit 1 / DDS select., bit 1
p0822[0...n]	BI: Drive Data Set selection DDS bit 2 / DDS select., bit 2
p0823[0...n]	BI: Drive Data Set selection DDS bit 3 / DDS select., bit 3
p0824[0...n]	BI: Drive Data Set selection DDS bit 4 / DDS select., bit 4
p0828[0...n]	BI: Motor changeover, feedback signal / Mot_chng fdbk sig
p0840[0...n]	BI: ON / OFF (OFF1) / ON / OFF (OFF1)
p0844[0...n]	BI: No coast-down / coast-down (OFF2) signal source 1 / OFF2 S_src 1
p0845[0...n]	BI: No coast-down / coast-down (OFF2) signal source 2 / OFF2 S_src 2
p0848[0...n]	BI: No Quick Stop / Quick Stop (OFF3) signal source 1 / OFF3 S_src 1
p0849[0...n]	BI: No Quick Stop / Quick Stop (OFF3) signal source 2 / OFF3 S_src 2
p0852[0...n]	BI: Enable operation/inhibit operation / Operation enable
p0854[0...n]	BI: Control by PLC/no control by PLC / Master ctrl by PLC
p0855[0...n]	BI: Unconditionally release holding brake / Uncond open brake
p0856[0...n]	BI: Speed controller enable / n_ctrl enable
p0858[0...n]	BI: Unconditionally close holding brake / Uncond close brake
p1000[0...n]	Macro Connector Inputs (CI) for speed setpoints / Macro CI n_set
p1020[0...n]	BI: Fixed speed setpoint selection Bit 0 / n_set_fixed Bit 0
p1021[0...n]	BI: Fixed speed setpoint selection Bit 1 / n_set_fixed Bit 1
p1022[0...n]	BI: Fixed speed setpoint selection Bit 2 / n_set_fixed Bit 2
p1023[0...n]	BI: Fixed speed setpoint selection Bit 3 / n_set_fixed Bit 3
p1035[0...n]	BI: Motorized potentiometer setpoint raise / Mop raise
p1036[0...n]	BI: Motorized potentiometer lower setpoint / Mop lower
p1039[0...n]	BI: Motorized potentiometer inversion / MotP inv
p1041[0...n]	BI: Motorized potentiometer manual/automatic / Mop manual/auto
p1042[0...n]	CI: Motorized potentiometer automatic setpoint / Mop auto setpoint
p1043[0...n]	BI: Motorized potentiometer accept setting value / MotP acc set val
p1044[0...n]	CI: Motorized potentiometer setting value / Mop set val
p1051[0...n]	CI: Speed limit RFG positive direction of rotation / n_limit RFG pos
p1052[0...n]	CI: Speed limit RFG negative direction of rotation / n_limit RFG neg
p1055[0...n]	BI: Jog bit 0 / Jog bit 0
p1056[0...n]	BI: Jog bit 1 / Jog bit 1
p1070[0...n]	CI: Main setpoint / Main setpoint
p1071[0...n]	CI: Main setpoint scaling / Main setp scal
p1075[0...n]	CI: Supplementary setpoint / Suppl setp
p1076[0...n]	CI: Supplementary setpoint scaling / Suppl setp scal
p1085[0...n]	CI: Speed limit in positive direction of rotation / n_limit pos
p1088[0...n]	CI: Speed limit in negative direction of rotation / n_limit neg
p1106[0...n]	CI: Minimum speed signal source / n_min s_src
p1110[0...n]	BI: Inhibit negative direction / Inhib neg dir
p1111[0...n]	BI: Inhibit positive direction / Inhib pos dir
p1113[0...n]	BI: Setpoint inversion / Setp inv

© Siemens AG 2012 All Rights Reserved

p1122[0...n]	BI: Bypass ramp-function generator / Bypass RFG
p1138[0...n]	CI: Up ramp scaling / Up ramp scaling
p1139[0...n]	CI: Down ramp scaling / Down ramp scaling
p1140[0...n]	BI: Enable ramp-function generator/inhibit ramp-function generator / RFG enable
p1141[0...n]	BI: Continue ramp-function generator/freeze ramp-function generator / Continue RFG
p1142[0...n]	BI: Enable setpoint/inhibit setpoint / Setpoint enable
p1143[0...n]	BI: Ramp-function generator, accept setting value / RFG accept set v
p1144[0...n]	CI: Ramp-function generator setting value / RFG setting value
p1155[0...n]	CI: Speed controller speed setpoint 1 / n_ctrl n_set 1
p1160[0...n]	CI: Speed controller speed setpoint 2 / n_ctrl n_set 2
p1201[0...n]	BI: Flying restart enable signal source / Fly_res enab S_src
p1230[0...n]	BI: Armature short-circuit / DC braking activation / ASC/DCBRK act
p1235[0...n]	BI: External armature short-circuit, contactor feedback signal / ASC ext feedback
p1330[0...n]	CI: U/f control independent voltage setpoint / Uf U_set independ.
p1356[0...n]	CI: U/f control, angular setpoint / Uf ang setpoint
p1437[0...n]	CI: Speed controller, reference model I component input / n_ctrRefMod I_comp
p1440[0...n]	CI: Speed controller speed actual value / n_ctrl n_act
p1455[0...n]	CI: Speed controller P gain adaptation signal / n_ctr adapt_sig Kp
p1466[0...n]	CI: Speed controller P-gain scaling / n_ctrl Kp scal
p1475[0...n]	CI: Speed controller torque setting value for motor holding brake / n_ctrl M_sv MHB
p1476[0...n]	BI: Speed controller hold integrator / n_ctrl integ stop
p1477[0...n]	BI: Speed controller set integrator value / n_ctrl integ set
p1478[0...n]	CI: Speed controller integrator setting value / n_ctr integ_setVal
p1479[0...n]	CI: Speed controller integrator setting value scaling / n_ctrl I_val scal
p1486[0...n]	CI: Droop compensation torque / Droop M_comp
p1492[0...n]	BI: Droop feedback enable / Droop enable
p1495[0...n]	CI: Acceleration pre-control / a_prectrl
p1497[0...n]	CI: Moment of inertia, scaling / M_mom inert scal
p1500[0...n]	Macro Connector Inputs (CI) for torque setpoints / Macro CI M_set
p1501[0...n]	BI: Change over between closed-loop speed/torque control / Changeov n/M_ctrl
p1503[0...n]	CI: Torque setpoint / M_set
p1511[0...n]	CI: Supplementary torque 1 / M_suppl 1
p1512[0...n]	CI: Supplementary torque 1 scaling / M_suppl 1 scal
p1513[0...n]	CI: Supplementary torque 2 / M_suppl 2
p1522[0...n]	CI: Torque limit upper / M_max upper
p1523[0...n]	CI: Torque limit lower / M_max lower
p1528[0...n]	CI: Torque limit upper scaling / M_max upper scal
p1529[0...n]	CI: Torque limit lower scaling / M_max lower scal
p1540[0...n]	CI: Torque limit speed controller upper scaling / M_max n-ctr upScal
p1541[0...n]	CI: Torque limit. speed controller lower scaling / M_max nctr lowScal
p1545[0...n]	BI: Activates travel to a fixed stop / TfS activation
p1551[0...n]	BI: Torque limit variable/fixed signal source / M_lim var/fixS_src
p1552[0...n]	CI: Torque limit upper scaling without offset / M_max up w/o offs
p1554[0...n]	CI: Torque limit lower scaling without offset / M_max low w/o offs
p1555[0...n]	CI: Power limit / P_max
p1569[0...n]	CI: Supplementary torque 3 / M_suppl 3
p1571[0...n]	CI: Supplementary flux setpoint / Suppl flux setp
p1640[0...n]	CI: Excitation current actual value signal source / I_exc_ActVal S_src
p2103[0...n]	BI: 1. Acknowledge faults / 1. Acknowledge
p2104[0...n]	BI: 2. Acknowledge faults / 2. Acknowledge
p2105[0...n]	BI: 3. Acknowledge faults / 3. Acknowledge
p2106[0...n]	BI: External fault 1 / External fault 1
p2107[0...n]	BI: External fault 2 / External fault 2

© Siemens AG 2012 All Rights Reserved

p2108[0...n] BI: External fault 3 / External fault 3
p2112[0...n] BI: External alarm 1 / External alarm 1
p2116[0...n] BI: External alarm 2 / External alarm 2
p2117[0...n] BI: External alarm 3 / External alarm 3
p2144[0...n] BI: Motor stall monitoring enable (negated) / Mot stall enab neg
p2148[0...n] BI: RFG active / RFG active
p2151[0...n] CI: Speed setpoint for messages/signals / n_set for msg
p2154[0...n] CI: Speed setpoint 2 / n_set 2
p2200[0...n] BI: Technology controller enable / Tec_ctrl enable
p2220[0...n] BI: Technology controller fixed value selection bit 0 / Tec_ctrl sel bit 0
p2221[0...n] BI: Technology controller fixed value selection bit 1 / Tec_ctrl sel bit 1
p2222[0...n] BI: Technology controller fixed value selection bit 2 / Tec_ctrl sel bit 2
p2223[0...n] BI: Technology controller fixed value selection bit 3 / Tec_ctrl sel bit 3
p2235[0...n] BI: Technology controller motorized potentiometer raise setpoint / Tec_ctrl mop raise
p2236[0...n] BI: Technology controller motorized potentiometer lower setpoint / Tec_ctrl mop lower
p2253[0...n] CI: Technology controller setpoint 1 / Tec_ctrl setp 1
p2254[0...n] CI: Technology controller setpoint 2 / Tec_ctrl setp 2
p2264[0...n] CI: Technology controller actual value / Tec_ctrl act val
p2286[0...n] BI: Hold technology controller integrator / Tec_ctr integ stop
p2289[0...n] CI: Technology controller pre-control signal / Tec_ctrl prectrl
p2296[0...n] CI: Technology controller output scaling / Tec_ctrl outp scal
p2297[0...n] CI: Technology controller maximum limit signal source / Tec_ctrMaxLimS_src
p2298[0...n] CI: Technology controller minimum limit signal source / Tec_ctrl min_l s_s
p2299[0...n] CI: Technology controller limit offset / Tech_ctrl lim offs
p3111[0...n] BI: External fault 3, enable / Ext fault 3 enab
p3112[0...n] BI: External fault 3 enable negated / Ext flt 3 enab neg
p3784[0...n] BI: Sync-line-drive external increase voltage / Sync ext U incr
p3785[0...n] BI: Sync-line-drive external decrease voltage / Sync ext U decr
p3802[0...n] BI: Sync-line-drive enable / Sync enable

1.3.2 Parameters for drive data sets (DDS)

The following list contains the parameters that are dependent on the drive data sets.

Product: SINAMICS G130/G150, Version: 4502400, Language: eng, Type: DDS

p0186[0...n] Motor Data Sets (MDS) number / MDS number
p0187[0...n] Encoder 1 encoder data set number / Enc 1 EDS number
p0188[0...n] Encoder 2 encoder data set number / Enc 2 EDS number
p0189[0...n] Encoder 3 encoder data set number / Enc 3 EDS number
p0340[0...n] Automatic calculation, motor/control parameters / Calc auto par
p0572[0...n] Activate/de-activate inhibit list / Inh_list act/deact
p0578[0...n] Calculate technology-dependent parameters / Calc tec par
p0640[0...n] Current limit / Current limit
p1001[0...n] CO: Fixed speed setpoint 1 / n_set_fixed 1
p1002[0...n] CO: Fixed speed setpoint 2 / n_set_fixed 2
p1003[0...n] CO: Fixed speed setpoint 3 / n_set_fixed 3
p1004[0...n] CO: Fixed speed setpoint 4 / n_set_fixed 4
p1005[0...n] CO: Fixed speed setpoint 5 / n_set_fixed 5
p1006[0...n] CO: Fixed speed setpoint 6 / n_set_fixed 6
p1007[0...n] CO: Fixed speed setpoint 7 / n_set_fixed 7
p1008[0...n] CO: Fixed speed setpoint 8 / n_set_fixed 8
p1009[0...n] CO: Fixed speed setpoint 9 / n_set_fixed 9

© Siemens AG 2012 All Rights Reserved

p1010[0...n]	CO: Fixed speed setpoint 10 / n_set_fixed 10
p1011[0...n]	CO: Fixed speed setpoint 11 / n_set_fixed 11
p1012[0...n]	CO: Fixed speed setpoint 12 / n_set_fixed 12
p1013[0...n]	CO: Fixed speed setpoint 13 / n_set_fixed 13
p1014[0...n]	CO: Fixed speed setpoint 14 / n_set_fixed 14
p1015[0...n]	CO: Fixed speed setpoint 15 / n_set_fixed 15
p1030[0...n]	Motorized potentiometer configuration / Mop configuration
p1037[0...n]	Motorized potentiometer maximum speed / MotP n_max
p1038[0...n]	Motorized potentiometer minimum speed / MotP n_min
p1040[0...n]	Motorized potentiometer starting value / Mop start value
p1047[0...n]	Motorized potentiometer ramp-up time / Mop ramp-up time
p1048[0...n]	Motorized potentiometer ramp-down time / Mop ramp-down time
p1058[0...n]	Jog 1 speed setpoint / Jog 1 n_set
p1059[0...n]	Jog 2 speed setpoint / Jog 2 n_set
p1063[0...n]	Speed limit setpoint channel / n_limit setp
p1080[0...n]	Minimum speed / n_min
p1082[0...n]	Maximum speed / n_max
p1083[0...n]	CO: Speed limit in positive direction of rotation / n_limit pos
p1086[0...n]	CO: Speed limit in negative direction of rotation / n_limit neg
p1091[0...n]	Skip speed 1 / n_skip 1
p1092[0...n]	Skip speed 2 / n_skip 2
p1093[0...n]	Skip speed 3 / n_skip 3
p1094[0...n]	Skip speed 4 / n_skip 4
p1101[0...n]	Skip speed bandwidth / n_skip bandwidth
p1120[0...n]	Ramp-function generator ramp-up time / RFG ramp-up time
p1121[0...n]	Ramp-function generator ramp-down time / RFG ramp-down time
p1130[0...n]	Ramp-function generator initial rounding-off time / RFG t_start_round
p1131[0...n]	Ramp-function generator final rounding-off time / RFG t_end_delay
p1134[0...n]	Ramp-function generator rounding-off type / RFG round-off type
p1135[0...n]	OFF3 ramp-down time / OFF3 t_RD
p1136[0...n]	OFF3 initial rounding-off time / RFGOFF3 t_strt_rnd
p1137[0...n]	OFF3 final rounding-off time / RFG OFF3 t_end_del
p1145[0...n]	Ramp-function generator tracking intensity. / RFG track intens
p1148[0...n]	Ramp-function gen., tolerance for ramp-up and ramp-down active / RFG tol HL/RL act
p1151[0...n]	Ramp-function generator configuration / RFG config
p1189[0...n]	Speed setpoint configuration / n_ctrl config
p1200[0...n]	Flying restart operating mode / FlyRest op_mode
p1202[0...n]	Flying restart search current / FlyRest I_srch
p1203[0...n]	Flying restart search rate factor / FlyRst v_Srch Fact
p1226[0...n]	Threshold for zero speed detection / n_standst n_thresh
p1240[0...n]	Vdc controller or Vdc monitoring configuration / Vdc_ctrl config
p1243[0...n]	Vdc_max controller dynamic factor / Vdc_max dyn_factor
p1245[0...n]	Vdc_min controller switch-in level (kinetic buffering) / Vdc_min on_level
p1247[0...n]	Vdc_min controller dynamic factor (kinetic buffering) / Vdc_min dyn_factor
p1249[0...n]	Vdc_max controller speed threshold / Vdc_max n_thresh
p1250[0...n]	Vdc controller proportional gain / Vdc_ctrl Kp
p1251[0...n]	Vdc controller integral time / Vdc_ctrl Tn
p1252[0...n]	Vdc controller rate time / Vdc_ctrl t_rate
p1255[0...n]	Vdc_min controller time threshold / Vdc_min t_thresh
p1256[0...n]	Vdc_min controller response (kinetic buffering) / Vdc_min response
p1257[0...n]	Vdc_min controller speed threshold / Vdc_min n_thresh
p1262[0...n]	Bypass dead time / Bypass t_dead
p1280[0...n]	Vdc controller or Vdc monitoring configuration (U/f) / Vdc_ctr config U/f

© Siemens AG 2012 All Rights Reserved

p1283[0...n]	Vdc_max controller dynamic factor (U/f) / Vdc_max dyn_factor
p1285[0...n]	Vdc_min controller switch-in level (kinetic buffering) (U/f) / Vdc_min on_level
p1287[0...n]	Vdc_min controller dynamic factor (kinetic buffering) (U/f) / Vdc_min dyn_factor
p1288[0...n]	Vdc_max controller feedback coupling factor ramp-fct. gen. (U/f) / Vdc_max factor RFG
p1289[0...n]	Vdc_max controller speed threshold (U/f) / Vdc_max n_thresh
p1290[0...n]	Vdc controller proportional gain (U/f) / Vdc_ctrl Kp
p1291[0...n]	Vdc controller integral time (U/f) / Vdc_ctrl Tn
p1292[0...n]	Vdc controller rate time (U/f) / Vdc_ctrl t_rate
p1293[0...n]	Vdc min controller output limit (U/f) / Vdc_min outp_lim
p1295[0...n]	Vdc_min controller time threshold (U/f) / Vdc_min t_thresh
p1296[0...n]	Vdc_min controller response (kinetic buffering) (U/f / Vdc_min response
p1297[0...n]	Vdc_min controller speed threshold (U/f) / Vdc_min n_thresh
p1300[0...n]	Open-loop/closed-loop control operating mode / Op/cl-lp ctrl_mode
p1302[0...n]	U/f control configuration / U/f configuration
p1310[0...n]	Voltage boost permanent / U_boost perm
p1311[0...n]	Voltage boost at acceleration / U_boost accelerate
p1312[0...n]	Voltage boost when starting / U_boost starting
p1320[0...n]	U/f control programmable characteristic frequency 1 / Uf char f1
p1321[0...n]	U/f control programmable characteristic voltage 1 / Uf char U1
p1322[0...n]	U/f control programmable characteristic frequency 2 / Uf char f2
p1323[0...n]	U/f control programmable characteristic voltage 2 / Uf char U2
p1324[0...n]	U/f control programmable characteristic frequency 3 / Uf char f3
p1325[0...n]	U/f control programmable characteristic voltage 3 / Uf char U3
p1326[0...n]	U/f control programmable characteristic frequency 4 / Uf char f4
p1327[0...n]	U/f control programmable characteristic voltage 4 / Uf char U4
p1333[0...n]	U/f control FCC starting frequency / U/f FCC f_start
p1334[0...n]	U/f control slip compensation starting frequency / Slip comp start
p1335[0...n]	Slip compensation, scaling / Slip comp scal
p1336[0...n]	Slip compensation limit value / Slip comp lim val
p1338[0...n]	U/f mode resonance damping gain / Uf Res_damp gain
p1339[0...n]	U/f mode resonance damping filter time constant / Uf Res_damp T
p1340[0...n]	I_max frequency controller proportional gain / I_max_ctrl Kp
p1341[0...n]	I_max frequency controller integral time / I_max_ctrl Tn
p1345[0...n]	I_max voltage controller proportional gain / I_max_U_ctrl Kp
p1346[0...n]	I_max voltage controller integral time / I_max_U_ctrl Tn
p1349[0...n]	U/f mode resonance damping maximum frequency / Uf res_damp f_max
p1350[0...n]	Soft starting / Soft starting
p1351[0...n]	CO: Motor holding brake starting frequency / Brake f_start
p1358[0...n]	Angular difference, symmetrizing, actual angle / Sym act angle
p1400[0...n]	Speed control configuration / n_ctrl config
p1401[0...n]	Flux control configuration / Flux ctrl config
p1402[0...n]	Closed-loop current control and motor model configuration / I_ctrl config
p1416[0...n]	Speed setpoint filter 1 time constant / n_set_filt 1 T
p1428[0...n]	Speed pre-control balancing dead time / n_prectrBal t_dead
p1429[0...n]	Speed pre-control balancing time constant / n_prectr bal T
p1433[0...n]	Speed controller reference model natural frequency / n_ctrl RefMod fn
p1434[0...n]	Speed controller reference model damping / n_ctrl RefMod D
p1435[0...n]	Speed controller reference model dead time / n_ctrRefMod t_dead
p1441[0...n]	Actual speed smoothing time / n_act T_smooth
p1442[0...n]	Speed controller speed actual value smoothing time / n_ctr n_act T_smth
p1451[0...n]	Motor model speed actual value smoothing time SLVC / Mot_mod n_act t_sm
p1452[0...n]	Speed controller speed actual value smoothing time (SLVC) / n_C n_act T_s SLVC
p1456[0...n]	Speed controller P gain adaptation lower starting point / n_ctrl AdaptKpLow

© Siemens AG 2012 All Rights Reserved

p1457[0...n]	Speed controller P gain adaptation upper starting point / n_ctrl AdaptKp up
p1458[0...n]	Adaptation factor, lower / Adapt_factor lower
p1459[0...n]	Adaptation factor, upper / Adapt_factor upper
p1460[0...n]	Speed controller P gain adaptation speed, lower / n_ctrl Kp n lower
p1461[0...n]	Speed controller Kp adaptation speed, upper scaling / n_ctr Kp n up scal
p1462[0...n]	Speed controller integral time adaptation speed lower / n_ctrl Tn n lower
p1463[0...n]	Speed controller Tn adaptation speed, upper scaling / n_ctr Tn n up scal
p1464[0...n]	Speed controller adaptation speed, lower / n_ctrl n lower
p1465[0...n]	Speed controller adaptation speed, upper / n_ctrl n upper
p1470[0...n]	Speed controller encoderless operation P-gain / n_ctrl SLVC Kp
p1472[0...n]	Speed controller encoderless operation integral time / n_ctrl SLVC Tn
p1487[0...n]	Droop compensation torque scaling / Droop M_comp scal
p1488[0...n]	Droop input source / Droop input source
p1489[0...n]	Droop feedback scaling / Droop scaling
p1496[0...n]	Acceleration pre-control scaling / a_prectrl scal
p1499[0...n]	Accelerating for torque control, scaling / a for M_ctrl scal
p1514[0...n]	Supplementary torque 2 scaling / M_suppl 2 scal
p1517[0...n]	Accelerating torque smoothing time constant / M_accel T_smooth
p1520[0...n]	CO: Torque limit upper / M_max upper
p1521[0...n]	CO: Torque limit lower / M_max lower
p1524[0...n]	CO: Torque limit upper scaling / M_max upper scal
p1525[0...n]	CO: Torque limit lower scaling / M_max lower scal
p1530[0...n]	Power limit motoring / P_max mot
p1531[0...n]	Power limit regenerative / P_max gen
p1556[0...n]	Power limit scaling / P_max scal
p1570[0...n]	CO: Flux setpoint / Flux setpoint
p1572[0...n]	Supplementary flux setpoint / Suppl flux setp
p1573[0...n]	Flux threshold value magnetizing / Flux thresh magnet
p1574[0...n]	Voltage reserve dynamic / U_reserve dyn
p1576[0...n]	Flux boost, adaptation speed, lower / Flux boost n lower
p1577[0...n]	Flux boost adaptation speed, upper / Flux boost n upper
p1580[0...n]	Efficiency optimization / Efficiency opt.
p1582[0...n]	Flux setpoint smoothing time / Flux setp T_smth
p1584[0...n]	Field weakening operation, flux setpoint smoothing time / Field weak T_smth
p1585[0...n]	Flux actual value, smoothing time / Flux actVal T_smth
p1586[0...n]	Field weakening characteristic, scaling / Field weak scal
p1590[0...n]	Flux controller P gain / Flux controller Kp
p1592[0...n]	Flux controller integral time / Flux controller Tn
p1594[0...n]	Field-weakening controller, P gain / Field_ctrl Kp
p1596[0...n]	Field weakening controller integral-action time / Field_ctrl Tn
p1599[0...n]	Flux controller, excitation current difference / Flux ctr I_exc_dif
p1600[0...n]	P flux controller, P gain / P flux ctrl Kp
p1604[0...n]	Pulse technique current limit / Pulse current lim
p1605[0...n]	Pulse technique pattern configuration / Puls pattrn config
p1607[0...n]	Pulse technique stimulus / Puls stimulus
p1609[0...n]	I/f operation current setpoint / I/f op I_setp
p1610[0...n]	Torque setpoint static (SLVC) / M_set static
p1611[0...n]	Supplementary accelerating torque (SLVC) / M_suppl_accel
p1612[0...n]	Current setpoint magnetizing open-loop controlled / Id_set ctrl
p1616[0...n]	Current setpoint smoothing time / I_set T_smooth
p1619[0...n]	Setpoint/actual value tracking threshold / SetAct track thrsh
p1620[0...n]	Stator current, minimum / I_stator min
p1621[0...n]	Changeover speed, inner cos phi = 1 / n_chngov cos phi=1

© Siemens AG 2012 All Rights Reserved

p1622[0...n]	Field-generating current setpoint smoothing time constant / Id_setp T_smth
p1625[0...n]	Excitation current setpoint calibration / I_exc_setp cal
p1628[0...n]	Current model controller, dynamic factor / I_mod_ctr dyn_fact
p1629[0...n]	Current model controller P gain / I_mod_ctrl Kp
p1630[0...n]	Current model controller integral time / I_mod_ctrl Tn
p1642[0...n]	Minimum excitation current / Min I_exc
p1643[0...n]	Gain factor, minimum excitation current closed-loop control / Min I_exc Kp
p1653[0...n]	Current setpoint torque-generating smoothing time minimum / Isq_s T_smth min
p1654[0...n]	Curr. setpoint torque-gen. smoothing time field weakening range / Isq_s T_smth FW
p1656[0...n]	Current setpoint/Speed actual value filter activation / I_setp_filt act
p1657[0...n]	Current setpoint filter 1 type / I_set_filt 1 Typ
p1658[0...n]	Current setpoint filter 1 denominator natural frequency / I_set_filt 1 fn_n
p1659[0...n]	Current setpoint filter 1 denominator damping / I_set_filt 1 D_n
p1660[0...n]	Current setpoint filter 1 numerator natural frequency / I_set_filt 1 fn_z
p1661[0...n]	Current setpoint filter 1 numerator damping / I_set_filt 1 D_z
p1662[0...n]	Current setpoint filter 2 type / I_set_filt 2 Typ
p1663[0...n]	Current setpoint filter 2 denominator natural frequency / I_set_filt 2 fn_n
p1664[0...n]	Current setpoint filter 2 denominator damping / I_set_filt 2 D_n
p1665[0...n]	Current setpoint filter 2 numerator natural frequency / I_set_filt 2 fn_z
p1666[0...n]	Current setpoint filter 2 numerator damping / I_set_filt 2 D_z
p1677[0...n]	Speed actual value filter 5 type / n_act_filt 5 type
p1678[0...n]	Speed actual value filter 5 denominator natural frequency / n_act_filt 5 fn_d
p1679[0...n]	Speed actual value filter 5 denominator damping / n_act_filt 5 D_d
p1680[0...n]	Speed actual value filter 5 numerator natural frequency / n_act_filt 5 fn_n
p1681[0...n]	Speed actual value filter 5 numerator damping / n_act_filt 5 D_n
p1702[0...n]	Isd current controller pre-control scaling / Isd_ctr_prectrScal
p1703[0...n]	Isq current controller pre-control scaling / Isq_ctr_prectrScal
p1704[0...n]	Isq current controller pre-control EMF scaling / Isq_ctrl EMF scal
p1705[0...n]	Flux setpoint/actual value tracking threshold / Flux track thresh
p1715[0...n]	Current controller P gain / I_ctrl Kp
p1717[0...n]	Current controller integral-action time / I_ctrl Tn
p1726[0...n]	Quadrature arm decoupling, scaling / Transv_decpl scal
p1727[0...n]	Quadrature arm decoupling at voltage limit scaling / TrnsvDecplVmaxScal
p1730[0...n]	Isd controller integral component shutdown threshold / Isd_ctr I_compDeac
p1731[0...n]	Isd controller combination current time component / Isd ctrl iCombi T1
p1740[0...n]	Gain resonance damping for encoderless closed-loop control / Gain res_damp
p1744[0...n]	Motor model speed threshold stall detection / MotMod n_thr stall
p1745[0...n]	Motor model error threshold stall detection / MotMod ThreshStall
p1748[0...n]	Motor model lower changeover speed n_set -> n_act / Lower n_chngov
p1749[0...n]	Motor model upper changeover speed / increase changeover speed / Upper / n_chgov
p1750[0...n]	Motor model configuration / MotMod config
p1752[0...n]	Motor model changeover speed operation with encoder / MotMod n_chgov enc
p1753[0...n]	Motor model changeover speed hysteresis operation with encoder / MotMod n_chgovHysE
p1754[0...n]	Flux angle difference smoothing time / Angle diff T_smth
p1755[0...n]	Motor model changeover speed encoderless operation / MotMod n_chgSnsorl
p1757[0...n]	Motor model w/o enc. op./cl.-loop controlled stab. controller Kp / MotMod w/o enc Kp
p1758[0...n]	Motor model changeover delay time closed/open-loop control / MotMod t cl_op
p1759[0...n]	Motor model changeover delay time open/closed-loop control / MotMod t op_cl
p1760[0...n]	Motor model with encoder speed adaptation Kp / MotMod wE n_ada Kp
p1761[0...n]	Motor model with encoder speed adaptation Tn / MotMod wE n_ada Tn
p1764[0...n]	Motor model without encoder speed adaptation Kp / MotMod woE n_adaKp
p1766[0...n]	Motor model voltage model calculation enable / U_mod calc enab
p1767[0...n]	Motor model without encoder speed adaptation Tn / MotMod woE n_adaTn

© Siemens AG 2012 All Rights Reserved

p1774[0...n]	Motor model, offset voltage compensation alpha / MotMod offs comp A
p1775[0...n]	Motor model, offset voltage compensation beta / MotMod offs comp B
p1780[0...n]	Motor model adaptation configuration / MotMod adapt conf
p1784[0...n]	Motor model feedback scaling / MotMod fdbk scal
p1785[0...n]	Motor model Lh adaptation Kp / MotMod Lh Kp
p1786[0...n]	Motor model Lh adaptation integral time / MotMod Lh Tn
r1787[0...n]	Motor model Lh adaptation corrective value / MotMod Lh corr
p1795[0...n]	Motor model kT adaptation integral time / MotMod kT Tn
r1797[0...n]	Motor model kT adaptation corrective value / MotMod kT corr
p1798[0...n]	Motor model pulse technique speed adaptation Kp / MotMod pulses Kp
p1800[0...n]	Pulse frequency setpoint / Pulse freq setp
p1802[0...n]	Modulator mode / Modulator mode
p1803[0...n]	Maximum modulation depth / Modulat depth max
p1804[0...n]	Filter time constant smoothed modulation index / T_filt mod_idxSmth
p1806[0...n]	Filter time constant Vdc correction / T_filt Vdc_corr
p1811[0...n]	Pulse frequency wobbulation amplitude / Puls wobb ampl
p1820[0...n]	Reverse the output phase sequence / Outp_ph_seq rev
p1821[0...n]	Dir of rot / Dir of rot
p1840[0...n]	Actual value correction configuration / ActVal_corr conf
p1845[0...n]	Actual value correction evaluation factor Lsig / ActVal_cor ev Lsig
p1846[0...n]	Actual value correction damping factor / ActV_corr D_factor
p1959[0...n]	Rotating measurement configuration / Rot meas config
p2140[0...n]	Hysteresis speed 2 / n_hysteresis 2
p2141[0...n]	Speed threshold 1 / n_thresh val 1
p2142[0...n]	Hysteresis speed 1 / n_hysteresis 1
p2149[0...n]	Monitoring configuration / Monit config
p2150[0...n]	Hysteresis speed 3 / n_hysteresis 3
p2153[0...n]	Speed actual value filter time constant / n_act_filt T
p2155[0...n]	Speed threshold 2 / n_thresh val 2
p2156[0...n]	On delay, comparison value reached / t_on cmpr val rchd
p2161[0...n]	Speed threshold 3 / n_thresh val 3
p2162[0...n]	Hysteresis speed n_act > n_max / Hyst n_act>n_max
p2163[0...n]	Speed threshold 4 / n_thresh val 4
p2164[0...n]	Hysteresis speed 4 / n_hysteresis 4
p2166[0...n]	Off delay n_act = n_set / t_del_off n_i=n_so
p2167[0...n]	Switch-on delay n_act = n_set / t_on n_act=n_set
p2174[0...n]	Torque threshold value 1 / M_thresh val 1
p2175[0...n]	Motor blocked speed threshold / Mot lock n_thresh
p2177[0...n]	Motor blocked delay time / Mot lock t_del
p2178[0...n]	Motor stalled delay time / Mot stall t_del
p2181[0...n]	Load monitoring response / Load monit resp
p2182[0...n]	Load monitoring speed threshold value 1 / n_thresh 1
p2183[0...n]	Load monitoring speed threshold value 2 / n_thresh 2
p2184[0...n]	Load monitoring speed threshold value 3 / n_thresh 3
p2185[0...n]	Load monitoring torque threshold 1, upper / M_thresh 1 upper
p2186[0...n]	Load monitoring torque threshold 1, lower / M_thresh 1 lower
p2187[0...n]	Load monitoring torque threshold 2, upper / M_thresh 2 upper
p2188[0...n]	Load monitoring torque threshold 2, lower / M_thresh 2 lower
p2189[0...n]	Load monitoring torque threshold 3, upper / M_thresh 3 upper
p2190[0...n]	Load monitoring torque threshold 3, lower / M_thresh 3 lower
p2192[0...n]	Load monitoring delay time / Load monit t_del
p2194[0...n]	Torque threshold value 2 / M_thresh val 2
p2195[0...n]	Torque utilization switch-off delay / M_util t_off

© Siemens AG 2012 All Rights Reserved

p2196[0...n]	Torque utilization scaling / M_util scal
p2201[0...n]	CO: Technology controller, fixed value 1 / Tec_ctrl fix val1
p2202[0...n]	CO: Technology controller, fixed value 2 / Tec_ctr fix val 2
p2203[0...n]	CO: Technology controller, fixed value 3 / Tec_ctr fix val 3
p2204[0...n]	CO: Technology controller, fixed value 4 / Tec_ctr fix val 4
p2205[0...n]	CO: Technology controller, fixed value 5 / Tec_ctr fix val 5
p2206[0...n]	CO: Technology controller, fixed value 6 / Tec_ctr fix val 6
p2207[0...n]	CO: Technology controller, fixed value 7 / Tec_ctr fix val 7
p2208[0...n]	CO: Technology controller, fixed value 8 / Tec_ctr fix val 8
p2209[0...n]	CO: Technology controller, fixed value 9 / Tec_ctr fix val 9
p2210[0...n]	CO: Technology controller, fixed value 10 / Tec_ctr fix val 10
p2211[0...n]	CO: Technology controller, fixed value 11 / Tec_ctr fix val 11
p2212[0...n]	CO: Technology controller, fixed value 12 / Tec_ctr fix val 12
p2213[0...n]	CO: Technology controller, fixed value 13 / Tec_ctr fix val 13
p2214[0...n]	CO: Technology controller, fixed value 14 / Tec_ctr fix val 14
p2215[0...n]	CO: Technology controller, fixed value 15 / Tec_ctr fix val 15
p2216[0...n]	Technology controller fixed value selection method / Tec_ctr FixVal sel
p2230[0...n]	Technology controller motorized potentiometer configuration / Tec_ctr mop config
p2237[0...n]	Technology controller motorized potentiometer maximum value / Tec_ctrl mop max
p2238[0...n]	Technology controller motorized potentiometer minimum value / Tec_ctrl mop min
p2240[0...n]	Technology controller motorized potentiometer starting value / Tec_ctrl mop start
p2247[0...n]	Technology controller motorized potentiometer ramp-up time / Tec_ctr mop t_r-up
p2248[0...n]	Technology controller motorized potentiometer ramp-down time / Tec_ctrMop t_rdown
p2720[0...n]	Load gear configuration / Load gear config
p2721[0...n]	Load gear, rotary absolute encoder, revolutions, virtual / Abs rot rev
p2722[0...n]	Load gear, position tracking tolerance window / Pos track tol
r2723[0...n]	CO: Load gear absolute value / Load gear abs_val
r2724[0...n]	CO: Load gear position difference / Load gear pos diff
p2900[0...n]	CO: Fixed value 1 [%] / Fixed value 1 [%]
p2901[0...n]	CO: Fixed value 2 [%] / Fixed value 2 [%]
p2930[0...n]	CO: Fixed value M [Nm] / Fixed value M [Nm]
p3201[0...n]	Excitation current outside the tolerance threshold value / I_exc n Tol thresh
p3202[0...n]	Excitation current outside the tolerance hysteresis / I_exc n Tol hyst
p3203[0...n]	Excitation current outside the tolerance delay time / I_exc n Tol t_del
p3204[0...n]	Flux outside the tolerance threshold value / Flux n tol thresh
p3205[0...n]	Flux outside the tolerance hysteresis / Flux n tol hyst
p3206[0...n]	Flux outside tolerance delay time / Flux n tol t_del
p3207[0...n]	Zero current signal threshold value / I_0_sig thresh
p3208[0...n]	Zero current signal hysteresis / I_0_sig hyst
p3209[0...n]	Zero current signal delay time / I_0_sig t_del
p3233[0...n]	Torque actual value filter, time constant / M_act_filt T
p3236[0...n]	Speed threshold 7 / n_thresh val 7
p3237[0...n]	Hysteresis speed 7 / n_hysteresis 7
p3238[0...n]	OFF delay n_act_motor model = n_act external / t_del n_a = n_ext
p3320[0...n]	Fluid flow machine power point 1 / Fluid_mach P1
p3321[0...n]	Fluid flow machine speed point 1 / Fluid_mach n1
p3322[0...n]	Fluid flow machine power point 2 / Fluid_mach P2
p3323[0...n]	Fluid flow machine speed point 2 / Fluid_mach n2
p3324[0...n]	Fluid flow machine power point 3 / Fluid_mach P3
p3325[0...n]	Fluid flow machine speed point 3 / Fluid_mach n3
p3326[0...n]	Fluid flow machine power point 4 / Fluid_mach P4
p3327[0...n]	Fluid flow machine speed point 4 / Fluid_mach n4
p3328[0...n]	Fluid flow machine power point 5 / Fluid_mach P5

© Siemens AG 2012 All Rights Reserved

p3329[0...n]	Fluid flow machine speed point 5 / Fluid_mach n5
p3800[0...n]	Sync-line-drive activation / Sync act
p3801[0...n]	Sync-line-drive, drive object number / Sync DO_No
p3806[0...n]	Sync-line-drive frequency difference threshold value / Sync f_diff thresh
p3809[0...n]	Sync-line-drive phase setpoint / Sync phase setp
p3811[0...n]	Sync-line-drive frequency limiting / Sync f_lim
p3813[0...n]	Sync-line-drive phase synchronism threshold value / Sync Ph_sync thrsh
p3815[0...n]	Sync-line-drive voltage difference threshold value / Sync U_diff thresh
p3820[0...n]	Friction characteristic, value n0 / Friction n0
p3821[0...n]	Friction characteristic, value n1 / Friction n1
p3822[0...n]	Friction characteristic, value n2 / Friction n2
p3823[0...n]	Friction characteristic, value n3 / Friction n3
p3824[0...n]	Friction characteristic, value n4 / Friction n4
p3825[0...n]	Friction characteristic, value n5 / Friction n5
p3826[0...n]	Friction characteristic, value n6 / Friction n6
p3827[0...n]	Friction characteristic, value n7 / Friction n7
p3828[0...n]	Friction characteristic, value n8 / Friction n8
p3829[0...n]	Friction characteristic, value n9 / Friction n9
p3830[0...n]	Friction characteristic, value M0 / Friction M0
p3831[0...n]	Friction characteristic, value M1 / Friction M1
p3832[0...n]	Friction characteristic, value M2 / Friction M2
p3833[0...n]	Friction characteristic, value M3 / Friction M3
p3834[0...n]	Friction characteristic, value M4 / Friction M4
p3835[0...n]	Friction characteristic, value M5 / Friction M5
p3836[0...n]	Friction characteristic, value M6 / Friction M6
p3837[0...n]	Friction characteristic, value M7 / Friction M7
p3838[0...n]	Friction characteristic, value M8 / Friction M8
p3839[0...n]	Friction characteristic, value M9 / Friction M9
p3843[0...n]	Friction characteristic smoothing time frictional torque diff. / Frict T_smooth dM
p3844[0...n]	Friction characteristic number changeover point upper / Frict chngov pt up
p3846[0...n]	Friction characteristic record ramp-up/ramp-down time / Frict rec t_RFG
p3847[0...n]	Friction characteristic record warm-up time / Frict rec t_warm
r3925[0...n]	Identification final display / Ident final_disp
r3927[0...n]	Motor data identification control word / MotID STW
r3928[0...n]	Rotating measurement configuration / Rot meas config
r3998[0...n]	First drive commissioning / First drv_comm
p7035[0...n]	Par_circuit circulating current control operating mode / Circ_I mode
p7036[0...n]	Par_circuit circulating current control proportional gain / Circ_I Kp
p7037[0...n]	Par_circuit circulating current control integral time / I_circ Tn
p7038[0...n]	Par_circuit circulating current control limit / I_circ limit

© Siemens AG 2012 All Rights Reserved

1.3.3 Parameters for encoder data sets (EDS)

The following list contains the parameters that are dependent on the encoder data sets.

Product: SINAMICS G130/G150, Version: 4502400, Language: eng, Type: EDS

p0141[0...n]	Encoder interface (Sensor Module) component number / Enc_interf comp_no
p0142[0...n]	Encoder component number / Encoder comp_no
p0144[0...n]	Sensor Module detection via LED / SM detection LED
p0145[0...n]	Activate/de-activate encoder interface / Enc_intf act/deact
r0146[0...n]	Encoder interface active/inactive / Enc_intf act/inact
r0147[0...n]	Sensor Module EEPROM data version / SM EEPROM version
r0148[0...n]	Sensor Module firmware version / SM FW version
p0400[0...n]	Encoder type selection / Enc_typ sel
p0401[0...n]	Encoder type, OEM selection / Enc type OEM sel
p0402[0...n]	Gearbox type selection / Gearbox type sel
p0404[0...n]	Encoder configuration effective / Enc_config eff
p0405[0...n]	Square-wave encoder track A/B / Sq-wave enc A/B
p0407[0...n]	Linear encoder grid division / Enc grid div
p0408[0...n]	Rotary encoder pulse No. / Rot enc pulse No.
p0410[0...n]	Encoder inversion actual value / Enc inv act value
p0411[0...n]	Measuring gear, configuration / Meas gear config
p0412[0...n]	Measuring gear, absolute encoder, rotary, revolutions, virtual / Abs rot rev
p0413[0...n]	Measuring gear, position tracking tolerance window / Pos track window
p0414[0...n]	Redundant coarse position value relevant bits (identified) / Relevant bits
p0415[0...n]	Gx_XIST1 Coarse position safe most significant bit (identified) / Gx_XIST1 safe MSB
p0416[0...n]	Non safety-relevant meas. steps position value pos1 (detected) / nsrPos1
p0417[0...n]	Encoder safety comparison algorithm (detected) / Safety CompAlgo
p0418[0...n]	Fine resolution Gx_XIST1 (in bits) / Enc fine Gx_XIST1
p0419[0...n]	Fine resolution absolute value Gx_XIST2 (in bits) / Enc fine Gx_XIST2
p0420[0...n]	Encoder connection / Enc_connection
p0421[0...n]	Absolute encoder rotary multiturn resolution / Enc abs multiturn
p0422[0...n]	Absolute encoder linear measuring step resolution / Enc abs meas step
p0423[0...n]	Absolute encoder rotary singleturn resolution / Enc abs singleturn
p0424[0...n]	Encoder, linear zero mark distance / Enc lin ZM_dist
p0425[0...n]	Encoder, rotary zero mark distance / Enc rot dist ZM
p0426[0...n]	Encoder zero mark differential distance / Enc ZM Dif_dist
p0427[0...n]	Encoder SSI baud rate / Enc SSI baud rate
p0428[0...n]	Encoder SSI monoflop time / Enc SSI t_monoflop
p0429[0...n]	Encoder SSI configuration / Enc SSI config
p0430[0...n]	Sensor Module configuration / SM config
p0431[0...n]	Angular commutation offset / Ang_com offset
p0432[0...n]	Gearbox factor, encoder revolutions / Grbx_fact enc_rev
p0433[0...n]	Gearbox factor, motor/load revolutions / Grbx_fact mot_rev
p0434[0...n]	Encoder SSI error bit / Enc SSI error bit
p0435[0...n]	Encoder SSI alarm bit / Enc SSI alarm bit
p0436[0...n]	Encoder SSI parity bit / Enc SSI parity bit
p0437[0...n]	Sensor Module configuration extended / SM config ext
p0438[0...n]	Squarewave encoder filter time / Enc t_filt
p0439[0...n]	Encoder ramp-up time / Enc ramp-up time
p0440[0...n]	Copy encoder serial number / Copy enc ser_no
p0441[0...n]	Encoder commissioning serial number part 1 / Enc comm ser_no 1
p0442[0...n]	Encoder commissioning serial number part 2 / Enc comm ser_no 2
p0443[0...n]	Encoder commissioning serial number part 3 / Enc comm ser_no 3

© Siemens AG 2012 All Rights Reserved

p0444[0...n] Encoder commissioning serial number part 4 / Enc comm ser_no 4
p0445[0...n] Encoder commissioning serial number part 5 / Enc comm ser_no 5
p0446[0...n] Encoder SSI number of bits before the absolute value / Enc SSI bit before
p0447[0...n] Encoder SSI number of bits absolute value / Enc SSI bit val
p0448[0...n] Encoder SSI number of bits after the absolute value / Enc SSI bit after
p0449[0...n] Encoder SSI number of bits, filler bits / Enc SSI fill bits
p0453[0...n] Pulse encoder evaluation zero speed measuring time / Enc_ev z 0 t_meas
p0493[0...n] Zero mark selection, input terminal / ZM_sel inp_term
p0494[0...n] Equivalent zero mark, input terminal / ZM_equiv input
p4600[0...n] Motor temperature sensor 1 sensor type / Temp_sens 1 type
p4601[0...n] Motor temperature sensor 2 sensor type / Temp_sens 2 type
p4602[0...n] Motor temperature sensor 3 sensor type / Temp_sens 3 type
p4603[0...n] Motor temperature sensor 4 sensor type / Temp_sens 4 type
p4662[0...n] Encoder characteristic type / Enc char_type
p4663[0...n] Encoder characteristic K0 / Enc char K0
p4664[0...n] Encoder characteristic K1 / Enc char K1
p4665[0...n] Encoder characteristic K2 / Enc char K2
p4666[0...n] Encoder characteristic K3 / Enc char K3
p4670[0...n] Analog sensor configuration / Ana_sens config
p4671[0...n] Analog sensor input / Ana_sens inp
p4672[0...n] Analog sensor channel A voltage at actual value zero / Ana_sens A U at 0
p4673[0...n] Analog sensor channel A voltage per encoder period / Ana_sens A U/per
p4674[0...n] Analog sensor channel B voltage at actual value zero / Ana_sens B U at 0
p4675[0...n] Analog sensor channel B voltage per encoder period / Ana_sens B U/per
p4676[0...n] Analog sensor range limit threshold / Ana_sens lim thr
p4677[0...n] Analog sensor LVDT configuration / Ana_sens LVDT conf
p4678[0...n] Analog sensor LVDT ratio / An_sens LVDT ratio
p4679[0...n] Analog sensor LVDT phase / An_sens LVDT ph
p4680[0...n] Zero mark monitoring tolerance permissible / ZM_monit tol perm
p4681[0...n] Zero mark monitoring, tolerance window limit 1 positive / ZM tol lim 1 pos
p4682[0...n] Zero mark monitoring, tolerance window limit 1 negative / ZM tol lim 1 neg
p4683[0...n] Zero mark monitoring tolerance window alarm threshold positive / ZM tol A_thr pos
p4684[0...n] Zero mark monitoring tolerance window alarm threshold negative / ZM tol A_thr neg
p4685[0...n] Speed actual value mean value generation / n_act mean val
p4686[0...n] Zero mark minimum length / ZM min length

1.3.4 Parameters for motor data sets (MDS)

The following list contains the parameters that are dependent on the motor data sets.

Product: SINAMICS G130/G150, Version: 4502400, Language: eng, Type: MDS

p0131[0...n] Motor component number / Mot comp_no
p0300[0...n] Motor type selection / Mot type sel
p0301[0...n] Motor code number selection / Mot code No. sel
r0302[0...n] Motor code number of motor with DRIVE-CLiQ / Motor code Mot DLQ
r0303[0...n] Motor with DRIVE-CLiQ status word / Motor w DLQ ZSW
p0304[0...n] Rated motor voltage / Mot U_rated
p0305[0...n] Rated motor current / Mot I_rated
p0306[0...n] Number of motors connected in parallel / Motor qty
p0307[0...n] Rated motor power / Mot P_rated
p0308[0...n] Rated motor power factor / Mot cos_phi_rated
p0309[0...n] Rated motor efficiency / Mot eta_rated

© Siemens AG 2012 All Rights Reserved

p0310[0...n]	Rated motor frequency / Mot f_rated
p0311[0...n]	Rated motor speed / Mot n_rated
r0313[0...n]	Motor pole pair number, actual (or calculated) / Mot PolePairNo act
p0314[0...n]	Motor pole pair number / Mot pole pair No.
p0316[0...n]	Motor torque constant / Mot kT
p0318[0...n]	Motor stall current / Mot I_standstill
p0320[0...n]	Motor rated magnetizing current/short-circuit current / Mot I_mag_rated
p0322[0...n]	Maximum motor speed / Mot n_max
p0323[0...n]	Maximum motor current / Mot I_max
p0324[0...n]	Winding maximum speed / Winding n_max
p0325[0...n]	Motor pole position identification current, 1st phase / Mot PolID I 1st ph
p0327[0...n]	Optimum motor load angle / Mot phi_load opt
p0328[0...n]	Motor reluctance torque constant / Mot kT_reluctance
p0329[0...n]	Motor pole position identification current / Mot PolID current
r0330[0...n]	Rated motor slip / Mot slip_rated
r0331[0...n]	Actual motor magnetizing current/short-circuit current / Mot I_mag_rtd act
r0332[0...n]	Rated motor power factor / Mot cos_phi_rated
r0333[0...n]	Rated motor torque / Mot M_rated
r0334[0...n]	Actual motor-torque constant / Mot kT act
p0335[0...n]	Motor cooling type / Motor cooling type
r0336[0...n]	Actual rated motor frequency / Mot f_rated act
r0337[0...n]	Rated motor EMF / Mot EMF_rated
r0339[0...n]	Rated motor voltage / Mot U_rated
p0341[0...n]	Motor moment of inertia / Mot M_mom of inert
p0342[0...n]	Ratio between the total and motor moment of inertia / Mot MomInert Ratio
r0343[0...n]	Rated motor current identified / Mot I_rated ident
p0344[0...n]	Motor weight (for the thermal motor model) / Mot weight th mod
r0345[0...n]	Nominal motor starting time / Mot t_start_rated
p0346[0...n]	Motor excitation build-up time / Mot t_excitation
p0347[0...n]	Motor de-excitation time / Mot t_de-excitat.
p0350[0...n]	Motor stator resistance, cold / Mot R_stator cold
p0352[0...n]	Cable resistance / Mot R_cable cold
p0353[0...n]	Motor series inductance / Mot L_series
p0354[0...n]	Motor rotor resistance cold / damping resistance d axis / Mot R_r cold/R_D d
p0355[0...n]	Motor damping resistance, q axis / Mot R_damp q
p0356[0...n]	Motor stator leakage inductance / Mot L_stator leak.
p0357[0...n]	Motor stator inductance, d axis / Mot L_stator d
p0358[0...n]	Motor rotor leakage inductance / damping inductance, d axis / Mot L_r leak / LDd
p0359[0...n]	Motor damping inductance, q axis / Mot L_damp q
p0360[0...n]	Motor magnetizing inductance/magn. inductance, d axis saturated / Mot Lh/Lh d sat
p0361[0...n]	Motor magnetizing inductance q axis, saturated / Mot L_magn q sat
p0362[0...n]	Motor saturation characteristic flux 1 / Mot saturat.flux 1
p0363[0...n]	Motor saturation characteristic flux 2 / Mot saturat.flux 2
p0364[0...n]	Motor saturation characteristic flux 3 / Mot saturat.flux 3
p0365[0...n]	Motor saturation characteristic flux 4 / Mot saturat.flux 4
p0366[0...n]	Motor saturation characteristic I_mag 1 / Mot sat. I_mag 1
p0367[0...n]	Motor saturation characteristic I_mag 2 / Mot sat. I_mag 2
p0368[0...n]	Motor saturation characteristic I_mag 3 / Mot sat. I_mag 3
p0369[0...n]	Motor saturation characteristic I_mag 4 / Mot sat. I_mag 4
r0370[0...n]	Motor stator resistance, cold / Mot R_stator cold
r0372[0...n]	Cable resistance / Mot R_cable
r0373[0...n]	Motor rated stator resistance / Mot R_stator rated
r0374[0...n]	Motor rotor resistance cold / damping resistance d axis / Mot R_r cold / RDd

© Siemens AG 2012 All Rights Reserved

r0375[0...n]	Motor damping resistance, q axis / Mot R_damp q
r0376[0...n]	Rated motor rotor resistance / Mot R_rotor rated
r0377[0...n]	Motor leakage inductance, total / Mot L_leak total
r0378[0...n]	Motor stator inductance, d axis / Mot L_stator d
r0380[0...n]	Motor damping inductance, d axis / Mot L_damping_d
r0381[0...n]	Motor damping inductance, q axis / Mot L_damping_q
r0382[0...n]	Motor magnetizing inductance transformed / Lh d axis saturated / Mot L_m tr/Lhd sat
r0383[0...n]	Motor magnetizing inductance q axis, saturated / Mot L_magn q sat
r0384[0...n]	Motor rotor time constant / damping time constant d axis / Mot T_rotor/T_Dd
r0385[0...n]	Motor damping time constant, q axis / Mot L_damping q
r0386[0...n]	Motor stator leakage time constant / Mot T_stator leak
r0387[0...n]	Motor stator leakage time constant, q axis / Mot T_Sleak /T_Sq
p0389[0...n]	Excitation rated no-load current / Exc I_noload_rated
p0390[0...n]	Rated excitation current / Exc I_rated
p0391[0...n]	Current controller adaptation, starting point KP / I_adapt pt KP
p0392[0...n]	Current controller adaptation, starting point KP adapted / I_adapt pt KP adap
p0393[0...n]	Current controller adaptation P gain scaling / I_adapt Kp scal
r0395[0...n]	Actual stator resistance / R_stator act
r0396[0...n]	Actual rotor resistance / R_rotor act
p0398[0...n]	Angle magn decoupling (cross saturation) coeff 1 / Magn decoupl C1
p0399[0...n]	Angle magn decoupling (cross saturation) coeff 3 / Magn decoupl C3
p0530[0...n]	Bearing version selection / Bearing vers sel
p0531[0...n]	Bearing code number selection / Bearing codeNo sel
p0532[0...n]	Bearing maximum speed / Bearing n_max
p0600[0...n]	Motor temperature sensor for monitoring / Mot temp_sensor
p0601[0...n]	Motor temperature sensor type / Mot_temp_sens type
p0604[0...n]	Mot_temp_mod 1/KTY alarm threshold / Mod 1/KTY A thresh
p0605[0...n]	Mot_temp_mod 1/2 threshold / Threshold
p0606[0...n]	Mot_temp_mod 2/KTY timer / Mod 2/KTY t_timer
p0607[0...n]	Temperature sensor fault timer / Sensor fault time
p0610[0...n]	Motor overtemperature response / Mot temp response
p0611[0...n]	I2t motor model thermal time constant / I2t mot_mod T
p0612[0...n]	Mot_temp_mod activation / Mot_temp_mod act
p0615[0...n]	Mot_temp_mod 1 (I2t) fault threshold / I2t F thresh
p0616[0...n]	Motor overtemperature alarm threshold 1 / Mot temp alarm 1
p0620[0...n]	Thermal adaptation, stator and rotor resistance / Mot therm_adapt R
p0621[0...n]	Identification stator resistance after restart / Rst_ident Restart
p0622[0...n]	Motor excitation time for Rs_ident after powering up again / t_excit Rs_id
p0624[0...n]	Motor temperature offset PT100 / Mot T_offset PT100
p0625[0...n]	Motor ambient temperature / Mot T_ambient
p0626[0...n]	Motor overtemperature, stator core / Mot T_over core
p0627[0...n]	Motor overtemperature, stator winding / Mot T_over stator
p0628[0...n]	Motor overtemperature rotor winding / Mot T_over rotor
r0630[0...n]	Mot_temp_mod ambient temperature / Mod T_ambient
r0631[0...n]	Mot_temp_mod stator iron temperature / Mod T_stator
r0632[0...n]	Mot_temp_mod stator winding temperature / Mod T_winding
r0633[0...n]	Mot_temp_mod rotor temperature / Mod T_rotor
p0634[0...n]	Q flux flux constant unsaturated / PSIQ KPSI UNSAT
p0635[0...n]	Q flux quadrature axis current constant unsaturated / PSIQ KIQ UNSAT
p0636[0...n]	Q flux direct axis current constant unsaturated / PSIQ KID UNSAT
p0637[0...n]	Q flux flux gradient saturated / PSIQ Grad SAT
p0643[0...n]	Overvoltage protection for synchronous motors / Overvolt_protect
p0650[0...n]	Actual motor operating hours / Mot t_oper act

© Siemens AG 2012 All Rights Reserved

p0651[0...n] Motor operating hours maintenance interval / Mot t_op maint
p0652[0...n] Motor stator resistance, scaling / Mot R_stator scal
p0653[0...n] Motor stator leakage inductance, scaling / Mot L_S_leak scal
p0655[0...n] Motor magnetizing inductance, d axis saturated scaling / Mot L_m d sat scal
p0656[0...n] Motor magnetizing inductance, q axis, saturated scaling / Mot L_m q sat scal
p0657[0...n] Motor damping inductance, d axis scaling / Mot L_damp d scal
p0658[0...n] Motor damping inductance, q axis scaling / Mot L_damp q scal
p0659[0...n] Motor damping resistance, d axis scaling / Mot R_damp d scal
p0660[0...n] Motor damping resistance, q axis scaling / Mot R_damp q scal
p0826[0...n] Motor changeover, motor number / Mot_chng mot No.
p0827[0...n] Motor changeover status word bit number / Mot_chg ZSW bitNo.
p1231[0...n] Armature short-circuit / DC braking configuration / ASC/DCBRK config
p1232[0...n] DC braking, braking current / DCBRK I_brake
p1233[0...n] DC braking time / DCBRK time
p1234[0...n] Speed at the start of DC braking / DCBRK n_start
p1236[0...n] Ext. armature short-cct., contactor feedback signal monit. time / ASC ext t_monit
p1237[0...n] External armature short-circuit, delay time when opening / ASC ext t_wait
p1909[0...n] Motor data identification control word / MotID STW
p1980[0...n] PolID technique / PolID technique
p1982[0...n] PolID selection / PolID selection
p1991[0...n] Motor changeover, angular commutation correction / Ang_com corr
p1999[0...n] Ang. commutation offset calibr. and PolID scaling / Com_ang_offs scal
p4610[0...n] Motor temperature sensor 1 sensor type MDS / Temp sens1 typ MDS
p4611[0...n] Motor temperature sensor 2 sensor type MDS / Temp sens2 typ MDS
p4612[0...n] Motor temperature sensor 3 sensor type MDS / Temp sens3 typ MDS
p4613[0...n] Motor temperature sensor 4 sensor type MDS / Temp sens4 typ MDS

1.3.5 Parameters for power unit data sets (PDS)

The following list contains the parameters that are dependent on the power unit data sets.

Product: SINAMICS G130/G150, Version: 4502400, Language: eng, Type: PDS

p0121[0...n] Power unit component number / PU comp_no
p0124[0...n] Power unit detection via LED / PU detection LED
p0125[0...n] Activate/de-activate power unit components / PU_comp act/deact
r0126[0...n] Power unit components active/inactive / PU comp act/inact
r0127[0...n] Power unit version EPROM data / PU EPROM version
r0128[0...n] Power unit, firmware version / PU FW version
r0200[0...n] Power unit code number actual / PU code no. act
p0201[0...n] Power unit code number / PU code no
r0203[0...n] Actual power unit type / PU actual type
r0204[0...n] Power unit hardware properties / PU HW property
p0251[0...n] Operating hours counter power unit fan / PU fan t_oper
p0895[0...n] BI: Activate/de-activate power unit components / PU_comp act/deact
p3901[0...n] Power unit EEPROM Vdc offset calibration / PU EEPROM Vdc_offs
p7001[0...n] Par_circuit power units enable / PU enable
r7002[0...n] Par_circuit status power units / Status PU
r7020[0...n] CO: Par_circuit deviation current in phase U / Phase U curr dev
r7021[0...n] CO: Par_circuit deviation current in phase V / Phase V curr dev
r7022[0...n] CO: Par_circuit deviation current in phase W / Phase W curr dev
r7030[0...n] CO: Par_circuit DC link voltage deviation / Vdc deviation
p7040[0...n] Par_circuit correction valve lockout time phase U / Comp t_lockout U

© Siemens AG 2012 All Rights Reserved

p7042[0...n]	Par_circuit correction valve lockout time phase V / Comp t_lockout V
p7044[0...n]	Par_circuit correction valve lockout time phase W / Comp t_lockout W
r7050[0...n]	Par_circuit circulating current phase U / Circ_I_phase U
r7051[0...n]	Par_circuit circulating current phase V / Circ_I_phase V
r7052[0...n]	Par_circuit circulating current phase W / Circ_I_phase W
r7200[0...n]	Par_circuit power unit overload I2t / PU overload I2t
r7201[0...n]	CO: Par_circuit power unit temperatures max. inverter / PU temp max inv
r7202[0...n]	Par_circuit power unit temperatures max. depletion layer / PU TempMaxDepLayer
r7203[0...n]	Par_circuit power unit temperatures max. rectifier / PU temp max rect
r7204[0...n]	Par_circuit power unit temperatures air intake / PU temp air intake
r7205[0...n]	Par_circuit power unit temperatures electronics / PU temp electr
r7206[0...n]	Par_circuit power unit temperatures inverter 1 / PU temp inv 1
r7207[0...n]	Par_circuit power unit temperatures inverter 2 / PU temp inv 2
r7208[0...n]	Par_circuit power unit temperatures inverter 3 / PU temp inv 3
r7209[0...n]	Par_circuit power unit temperatures inverter 4 / PU temp inv 4
r7210[0...n]	Par_circuit power unit temperatures inverter 5 / PU temp inv 5
r7211[0...n]	Par_circuit power unit temperatures inverter 6 / PU temp inv 6
r7212[0...n]	Par_circuit power unit temperatures inverter 1 / PU temp rect 1
r7213[0...n]	Par_circuit power unit temperatures inverter 2 / PU temp rect 2
r7214[0...n]	Par_circuit power unit temperatures depletion layer 1 / PU temp DepLayer 1
r7215[0...n]	Par_circuit power unit temperatures depletion layer 2 / PU temp DepLayer 2
r7216[0...n]	Par_circuit power unit temperatures depletion layer 3 / PU temp DepLayer 3
r7217[0...n]	Par_circuit power unit temperatures depletion layer 4 / PU temp DepLayer 4
r7218[0...n]	Par_circuit power unit temperatures depletion layer 5 / PU temp DepLayer 5
r7219[0...n]	Par_circuit power unit temperatures depletion layer 6 / PU temp DepLayer 6
r7220[0...n]	CO: Par_circuit drive output current maximum / Drv I_outp max
r7222[0...n]	CO: Par_circuit absolute current actual value / I_act abs val
r7223[0...n]	CO: Par_circuit phase current actual value phase U / I_phase U act val
r7224[0...n]	CO: Par_circuit phase current actual value phase V / I_phase V act val
r7225[0...n]	CO: Par_circuit phase current actual value phase W / I_phase W act val
r7226[0...n]	CO: Par_circuit phase current actual value phase U offset / I_phase U offset
r7227[0...n]	CO: Par_circuit phase current actual value phase V offset / I_phase V offset
r7228[0...n]	CO: Par_circuit phase current actual value phase W offset / I_phase W offset
r7229[0...n]	CO: Par_circuit phase current actual value sum U, V, W / I_phase sum UVW
r7230[0...n]	CO: Par_circuit DC link voltage actual value / Vdc_act
r7231[0...n]	CO: Par_circuit phase voltage actual value phase U / U_phase U act val
r7232[0...n]	CO: Par_circuit phase voltage actual value phase V / U_phase V act val
r7233[0...n]	CO: Par_circuit phase voltage actual value phase W / U_phase W act val
r7240[0...n]	Par_circuit gating unit status word 1 / Gating unit ZSW1

© Siemens AG 2012 All Rights Reserved

1.4 Parameters for write protection and know-how protection

Note:

References: /FH1/ SINAMICS S120 Function Manual Drive Functions
Section "Write protection and know-how protection"

1.4.1 Parameters with "WRITE_NO_LOCK"

The following list contains the parameters with the "WRITE_NO_LOCK" attribute.

These parameters are not affected by the write protection.

Product: SINAMICS G130/G150, Version: 4502400, Language: eng, Type: WRITE_NO_LOCK

p0003	BOP access level / BOP acc_level
p0009	Device commissioning parameter filter / Dev comm par_filt
p0124[0...n]	Power unit detection via LED / PU detection LED
p0124[0...23]	Main component detection using LED / M_comp detect LED
p0144[0...n]	Sensor Module detection via LED / SM detection LED
p0154	DRIVE-CLiQ Hub Module detection via LED / Hub detection LED
p0154	Terminal Module detection via LED / TM detection LED
p0972	Drive unit reset / Drv_unit reset
p0976	Reset and load all parameters / Reset load all par
p0977	Save all parameters / Save all par
p2035	Fieldbus interface USS PIV drive object number / Fieldbus USS DO_no
p2102	BI: Acknowledge all faults / Ackn all faults
p2111	Alarm counter / Alarm counter
p3100	RTC time stamp mode / RTC t_stamp mode
p3101[0...1]	RTC set UTC time / RTC set UTC
p3103	RTC synchronization source / RTC sync_source
p3950	Service parameter / Serv. par.
p3981	Faults, acknowledge drive object / Faults ackn DO
p3985	Master control mode selection / PcCtrl mode select
p4700[0...1]	Trace control / Trace control
p4701	Measuring function, control / Meas fct ctrl
p4707	Measurement function configuration / Meas fct config
p4710[0...1]	Trace trigger condition / Trace Trig_cond
p4711[0...5]	Trace trigger signal / Trace trig_signal
p4712[0...1]	Trace trigger threshold / Trace trig_thresh
p4713[0...1]	Trace tolerance band trigger threshold 1 / Trace trig thr 1
p4714[0...1]	Trace tolerance band trigger threshold 2 / Trace trig thr 2
p4715[0...1]	Trace bit mask trigger, bit mask / Trace trig mask
p4716[0...1]	Trace, bit mask trigger, trigger condition / Trace Trig_cond
p4717	Measuring function, number of averaging operations / Meas fct avg qty
p4718	Measuring function, number of stabilizing periods / MeasFct StabPerQty
p4720[0...1]	Trace recording cycle / Trace record_cyc
p4721[0...1]	Trace recording time / Trace record_time
p4722[0...1]	Trace trigger delay / Trace trig_delay
p4723[0...1]	Trace time slice cycle / Trace cycle
p4724[0...1]	Trace average in the time range / Trace average

© Siemens AG 2012 All Rights Reserved

p4730[0...5]	Trace record signal 0 / Trace record sig 0
p4731[0...5]	Trace record signal 1 / Trace record sig 1
p4732[0...5]	Trace record signal 2 / Trace record sig 2
p4733[0...5]	Trace record signal 3 / Trace record sig 3
p4734[0...5]	Trace record signal 4 / Trace record sig 4
p4735[0...5]	Trace record signal 5 / Trace record sig 5
p4736[0...5]	Trace record signal 6 / Trace record sig 6
p4737[0...5]	Trace record signal 7 / Trace record sig 7
p4780[0...1]	Trace physical address signal 0 / Trace PhyAddr Sig0
p4781[0...1]	Trace physical address signal 1 / Trace PhyAddr Sig1
p4782[0...1]	Trace physical address signal 2 / Trace PhyAddr Sig2
p4783[0...1]	Trace physical address signal 3 / Trace PhyAddr Sig3
p4784[0...1]	Trace physical address signal 4 / Trace PhyAddr Sig4
p4785[0...1]	Trace physical address signal 5 / Trace PhyAddr Sig5
p4786[0...1]	Trace physical address signal 6 / Trace PhyAddr Sig6
p4787[0...1]	Trace physical address signal 7 / Trace PhyAddr Sig7
p4789[0...1]	Trace physical address trigger signal / Trace PhyAddr Trig
p4795	Trace memory bank changeover / Trace mem changeov
p4800	Function generator control / FG control
p4810	Function generator mode / FG operating mode
p4812	Function generator physical address / FG phys address
p4813	Function generator physical address reference value / FG phys addr ref
p4815[0...2]	Function generator drive number / FG drive number
p4816	Function generator output signal integer number scaling / FG outp integ scal
p4819	BI: Function generator control / FG control
p4820	Function generator signal shape / FG signal shape
p4821	Function generator period / FG period duration
p4822	Function generator pulse width / FG pulse width
p4823	Function generator bandwidth / FG bandwidth
p4824	Function generator amplitude / FG amplitude
p4825	Function generator 2nd amplitude / FG 2nd amplitude
p4826	Function generator offset / FG offset
p4827	Function generator ramp-up time to offset / FG ramp-up offset
p4828	Function generator lower limit / FG lower limit
p4829	Function generator upper limit / FG upper limit
p4830	Function generator time slice cycle / FG time slice
p4831	Function generator amplitude scaling / FG amplitude scal
p4832[0...2]	Function generator amplitude scaling / FG amplitude scal
p4833[0...2]	Function generator offset scaling / FG offset scal
p4835[0...4]	Function generator free measurement function scaling / FG fr MeasFct scal
p7761	Write protection / Write protection
p7770	NVRAM action / NVRAM action
p8550	AOP LOCAL/REMOTE / AOP LOCAL/REMOTE
p8829	CBE20 remote controller number / CBE20 rem ctrl num
p9210	Flashing component number / Flash comp_no.
p9211	Flash function / Flash fct.
p9484	BICO interconnections search signal source / BICO S_src srch

© Siemens AG 2012 All Rights Reserved

1.4.2 Parameters with "KHP_WRITE_NO_LOCK"

The following list contains the parameters with the "KHP_WRITE_NO_LOCK" attribute.

These parameters are not affected by the know-how protection.

Product: SINAMICS G130/G150, Version: 4502400, Language: eng, Type: KHP_WRITE_NO_LOCK

p0003	BOP access level / BOP acc_level
p0009	Device commissioning parameter filter / Dev comm par_filt
p0124[0...n]	Power unit detection via LED / PU detection LED
p0124[0...23]	Main component detection using LED / M_comp detect LED
p0144[0...n]	Sensor Module detection via LED / SM detection LED
p0154	DRIVE-CLiQ Hub Module detection via LED / Hub detection LED
p0154	Terminal Module detection via LED / TM detection LED
p0972	Drive unit reset / Drv_unit reset
p0976	Reset and load all parameters / Reset load all par
p0977	Save all parameters / Save all par
p2035	Fieldbus interface USS PIV drive object number / Fieldbus USS DO_no
p2102	BI: Acknowledge all faults / Ackn all faults
p2111	Alarm counter / Alarm counter
p3100	RTC time stamp mode / RTC t_stamp mode
p3101[0...1]	RTC set UTC time / RTC set UTC
p3103	RTC synchronization source / RTC sync_source
p3950	Service parameter / Serv. par.
p3981	Faults, acknowledge drive object / Faults ackn DO
p3985	Master control mode selection / PcCtrl mode select
p7761	Write protection / Write protection
p7770	NVRAM action / NVRAM action
p8550	AOP LOCAL/REMOTE / AOP LOCAL/REMOTE
p8829	CBE20 remote controller number / CBE20 rem ctrl num
p9210	Flashing component number / Flash comp_no.
p9211	Flash function / Flash fct.
p9484	BICO interconnections search signal source / BICO S_src srch

1.4.3 Parameters with "KHP_ACTIVE_READ"

The following list contains the parameters with the "KHP_ACTIVE_READ" attribute.

These parameters can also be read with activated know-how protection.

Product: SINAMICS G130/G150, Version: 4502400, Language: eng, Type: KHP_ACTIVE_READ

p0015	Macro drive object / Macro DO
p0015	Macro drive unit / Macro drv unit
p0100	IEC/NEMA mot stds / IEC/NEMA mot stds
p0101[0...23]	Drive object numbers / DO numbers
p0103[0...23]	Application-specific view / Appl_spec view
p0105	Activate/de-activate drive object / DO act/deact
p0107[0...23]	Drive object type / DO type
p0108[0...23]	Drive objects, function module / DO function module
p0120	Number of Power unit Data Sets (PDS) / PDS count
p0121[0...n]	Power unit component number / PU comp_no
p0125[0...n]	Activate/de-activate power unit components / PU_comp act/deact
p0130	Number of Motor Data Sets (MDS) / MDS count

© Siemens AG 2012 All Rights Reserved

p0131[0...n]	Motor component number / Mot comp_no
p0140	Number of Encoder Data Sets (EDS) / EDS count
p0141[0...n]	Encoder interface (Sensor Module) component number / Enc_interf comp_no
p0142[0...n]	Encoder component number / Encoder comp_no
p0145[0...n]	Activate/de-activate encoder interface / Enc_intf act/deact
p0150	Number of VSM data sets / VSM dat_sets qty.
p0151[0...1]	DRIVE-CLiQ Hub Module component number / Hub comp_no
p0151	Terminal Module component number / TM comp_no
p0151[0...n]	Voltage Sensing Module component number / VSM comp_no
p0161	Option board, component number / Opt board comp_no
p0170	Number of Command Data Sets (CDS) / CDS count
p0180	Number of Drive Data Sets (DDS) / DDS count
p0199[0...24]	Drive object name / DO name
p0300[0...n]	Motor type selection / Mot type sel
p0304[0...n]	Rated motor voltage / Mot U_rated
p0305[0...n]	Rated motor current / Mot I_rated
p0349	System of units, motor equivalent circuit diagram data / Unit_sys mot ESB
p0400[0...n]	Encoder type selection / Enc_typ sel
p0505	Selecting the system of units / Unit sys select
p0595	Technological unit selection / Tech unit select
p0806	BI: Inhibit master control / PcCtrl inhibit
p0864	BI: Infeed operation / INF operation
p0922	IF1 PROFIdrive telegram selection / IF1 PD Telegr_sel
p0978[0...24]	List of drive objects / List of the DO
p1080[0...n]	Minimum speed / n_min
p1082[0...n]	Maximum speed / n_max
p1520[0...n]	CO: Torque limit upper / M_max upper
p2000	Reference frequency / f_ref
p2000	Reference speed reference frequency / n_ref f_ref
p2000	Reference velocity, reference frequency / v_ref f_ref
p2001	Reference voltage / Reference voltage
p2002	Reference current / I_ref
p2003	Reference torque / M_ref
p2005	Reference angle / Reference angle
p2006	Reference temp / Ref temp
p2007	Reference acceleration / a_ref
p2030	Field bus int protocol selection / Field bus protocol
p2038	IF1 PROFIdrive STW/ZSW interface mode / PD STW/ZSW IF mode
p2079	IF1 PROFIdrive PZD telegram selection extended / IF1 PD PZD tel ext
p4956[0...n]	OA application activation / OA act
p7763	KHP OEM exception list number of indices for p7764 / KHP OEM qty p7764
p7764[0...n]	KHP OEM exception list / KHP OEM excep list
p7852	Number of indices for r7853 / Qty indices r7853
p9500	SI Motion monitoring clock cycle (Control Unit) / SI Mtn clock CU
p9601	SI enable, functions integrated in the drive (Control Unit) / SI enable fct CU
p9810	SI PROFIsafe address (Motor Module) / SI PROFIsafe MM
p9902	Target topology number of indices / TargetTopo indices

© Siemens AG 2012 All Rights Reserved

Function diagrams 2

Contents

2.1	Table of contents	2-973
2.2	Explanations on the function diagrams	2-980
2.3	Overviews	2-985
2.4	CU320-2 input/output terminals	2-999
2.5	CU_LINK	2-1006
2.6	PROFIdrive	2-1008
2.7	Internal control/status words	2-1052
2.8	Sequence control	2-1065
2.9	Brake control	2-1068
2.10	Safety Integrated Basic Functions	2-1073
2.11	Safety Integrated Extended Functions	2-1080
2.12	Setpoint channel	2-1096
2.13	Encoder evaluation	2-1105
2.14	Vector control	2-1108
2.15	Technology functions	2-1131
2.16	Technology controller	2-1137
2.17	Signals and monitoring functions	2-1143
2.18	Diagnostics	2-1151
2.19	Data sets	2-1157
2.20	Basic Infeed	2-1163
2.21	Terminal Board 30 (TB30)	2-1170
2.22	Communication Board CAN10 (CBC10)	2-1175
2.23	Terminal Module 31 (TM31)	2-1182

© Siemens AG 2012 All Rights Reserved

2.24	Terminal Module 150 (TM150)	2-1192
2.25	Voltage Sensing Module (VSM)	2-1196
2.26	Basic Operator Panel 20 (BOP20)	2-1199

© Siemens AG 2012 All Rights Reserved

2.1 Table of contents

2.2 Explanations on the function diagrams 2-980
1020 – Explanation of the symbols (Part 1) 2-981
1021 – Explanation of the symbols (Part 2) 2-982
1022 – Explanation of the symbols (Part 3) 2-983
1030 – Handling BICO technology 2-984

2.3 Overviews 2-985
1510 – CU320-2 input/output terminals 2-986
1520 – PROFIdrive 2-987
1530 – Internal control/status words, data sets 2-988
1550 – Setpoint channel 2-989
1680 – Vector control, encoder evaluations (position, speed, temperature) 2-990
1690 – Vector control, V/f control 2-991
1700 – Vector control, speed control and generation of the torque limits 2-992
1710 – Vector control, current control 2-993
1750 – Monitoring functions, faults, alarms 2-994
1773 – Basic Infeed 2-995
1790 – Terminal Board 30 (TB30) 2-996
1840 – Terminal Module 31 (TM31) 2-997
1850 – Terminal Module 54F (TM54F) 2-998

2.4 CU320-2 input/output terminals 2-999
2120 – Digital inputs, electrically isolated (DI 0 ... DI 3, DI 16, DI 17) 2-1000
2121 – Digital inputs, electrically isolated (DI 4 ... DI 7, DI 20, DI 21) 2-1001
2130 – Digital inputs/outputs, bidirectional (DI/DO 8 ... DI/DO 9) 2-1002
2131 – Digital inputs/outputs, bidirectional (DI/DO 10 ... DI/DO 11) 2-1003
2132 – Digital inputs/outputs, bidirectional (DI/DO 12 ... DI/DO 13) 2-1004
2133 – Digital inputs/outputs, bidirectional (DI/DO 14 ... DI/DO 15) 2-1005

2.5 CU_LINK 2-1006
2211 – Data transfer 2-1007

2.6 PROFIdrive 2-1008
2410 – PROFIBUS (PB) / PROFINET (PN), addresses and diagnostics 2-1010
2415 – Standard telegrams and process data 1 2-1011

© Siemens AG 2012 All Rights Reserved

2416 – Standard telegrams and process data 2 2-1012
2419 – Manufacturer-specific telegrams and process data 1 2-1013
2420 – Manufacturer-specific telegrams and process data 2 2-1014
2421 – Manufacturer-specific telegrams and process data 3 2-1015
2422 – Manufacturer-specific telegrams and process data 4 2-1016
2423 – Manufacturer-specific/free telegrams and process data 2-1017
2425 – STW1_BM control word metal industry interconnection 2-1018
2426 – STW2_BM control word metal industry interconnection 2-1019
2427 – E_STW1_BM control word infeed metal industry interconnection 2-1020
2428 – ZSW1_BM status word metal industry interconnection 2-1021
2429 – ZSW2_BM status word metal industry interconnection 2-1022
2430 – E_ZSW1_BM control word infeed metal industry interconnection 2-1023
2439 – PZD receive signals, interconnection, profile-specific 2-1024
2440 – PZD receive signals, interconnection, manufacturer-specific 2-1025
2441 – STW1 control word interconnection (p2038 = 2) 2-1026
2442 – STW1 control word interconnection (p2038 = 0) 2-1027
2444 – STW2 control word interconnection (p2038 = 0) 2-1028
2447 – E_STW1 control word infeed interconnection 2-1029
2449 – PZD send signals, interconnection, profile-specific 2-1030
2450 – PZD send signals interconnection manufacturer-specific 2-1031
2451 – ZSW1 status word interconnection (p2038 = 2) 2-1032
2452 – ZSW1 status word interconnection (p2038 = 0) 2-1033
2454 – ZSW2 status word interconnection (p2038 = 0) 2-1034
2457 – E_ZSW1 status word infeed interconnection 2-1035
2468 – IF1 receive telegram, free interconnection via BICO (p0922 = 999) 2-1036
2470 – IF1 send telegram, free interconnection via BICO (p0922 = 999) 2-1037
2472 – IF1 status words, free interconnection 2-1038
2481 – IF1 receive telegram, free interconnection via BICO (p0922 = 999) 2-1039
2483 – IF1 send telegram, free interconnection via BICO (p0922 = 999) 2-1040
2485 – IF2 receive telegram, free interconnection via BICO 2-1041
2487 – IF2 send telegram, free interconnection 2-1042
2489 – IF2 status words, free interconnection 2-1043
2491 – IF2 receive telegram, free interconnection 2-1044
2493 – IF2 send telegram, free interconnection 2-1045
2495 – CU_STW1 control word 1, Control Unit interconnection 2-1046

© Siemens AG 2012 All Rights Reserved

2496 – CU_ZSW1 status word 1, Control Unit interconnection 2-1047
2497 – A_DIGITAL interconnection 2-1048
2498 – E_DIGITAL interconnection 2-1049
2499 – A_DIGITAL_1 interconnection 2-1050
2500 – E_DIGITAL_1 interconnection 2-1051

2.7 Internal control/status words 2-1052
2501 – Control word, sequence control 2-1053
2503 – Status word, sequence control 2-1054
2505 – Control word, setpoint channel 2-1055
2520 – Control word, speed controller 2-1056
2522 – Status word, speed controller 2-1057
2526 – Status word, closed-loop control 2-1058
2530 – Status word, current control 2-1059
2534 – Status word, monitoring functions 1 2-1060
2536 – Status word, monitoring functions 2 2-1061
2537 – Status word, monitoring functions 3 2-1062
2546 – Control word, faults/alarms 2-1063
2548 – Status word, faults/alarms 1 and 2 2-1064

2.8 Sequence control 2-1065
2610 – Sequencer 2-1066
2634 – Missing enable signals, line contactor control, logic operation 2-1067

2.9 Brake control 2-1068
2701 – Basic brake control (r0108.14 = 0) 2-1069
2704 – Extended brake control, zero-speed detection (r0108.14 = 1) 2-1070
2707 – Extended brake control, open/close brake (r0108.14 = 1) 2-1071
2711 – Extended brake control, signal outputs (r0108.14 = 1) 2-1072

2.10 Safety Integrated Basic Functions 2-1073
2800 – Parameter manager 2-1074
2802 – Monitoring and faults/alarms 2-1075
2804 – Status words 2-1076
2810 – STO (Safe Torque Off), SS1 (Safe Stop 1) 2-1077
2811 – STO (Safe Torque Off), safe pulse suppression 2-1078
2814 – SBC (Safe Brake Control), SBA (Safe Brake Adapter) 2-1079

© Siemens AG 2012 All Rights Reserved

2.11 Safety Integrated Extended Functions 2-1080
2820 – SLS (Safely-Limited Speed) 2-1081
2822 – SLP (Safely-Limited Position) 2-1082
2825 – SS1, SS2, SOS, internal STOP B, C, D, F 2-1083
2840 – Control word and status word 2-1084
2846 – Parameter manager 2-1085
2847 – TM54F parameter manager 2-1086
2848 – TM54F configuration, F-DI/F-DO test 2-1087
2850 – TM54F (F-DI 0 ... F-DI 4) 2-1088
2851 – TM54F (F-DI 5 ... F-DI 9) 2-1089
2853 – TM54F (F-DO 0 ... F-DO 3, DI 20 ... DI 23) 2-1090
2855 – TM54F control interface (p9601.2 = 1 & p9601.3 = 0) 2-1091
2856 – TM54F Safe State selection 2-1092
2857 – TM54F assignment (F-DO 0 ... F-DO 3) 2-1093
2860 – SSM (Safe Speed Monitor) 2-1094
2861 – SDI (Safe Direction) 2-1095

2.12 Setpoint channel 2-1096
3010 – Fixed speed setpoints 2-1097
3020 – Motorized potentiometer 2-1098
3030 – Main/supplementary setpoint, setpoint scaling, jogging 2-1099
3040 – Direction limitation and direction reversal 2-1100
3050 – Skip frequency bands and speed limitations 2-1101
3060 – Basic ramp-function generator 2-1102
3070 – Extended ramp-function generator 2-1103
3080 – Ramp-function generator selection, status word, tracking 2-1104

2.13 Encoder evaluation 2-1105
4704 – Raw signal sensing 2-1106
4715 – Speed actual value and pole position sensing, motor encoder ASM/SM (encoder 1) 2-1107

2.14 Vector control 2-1108
6030 – Speed setpoint, droop 2-1109
6031 – Pre-control balancing, reference/acceleration model 2-1110
6040 – Speed controller with/without encoder 2-1111
6050 – Speed controller adaptation (Kp_n/Tn_n adaptation) 2-1112

© Siemens AG 2012 All Rights Reserved

6060 – Torque setpoint 2-1113
6220 – Vdc_max controller and Vdc_min controller 2-1114
6300 – V/f characteristic and voltage boost 2-1115
6310 – Resonance damping and slip compensation 2-1116
6320 – Vdc_max controller and Vdc_min controller (U/f) 2-1117
6490 – Speed control configuration 2-1118
6491 – Flux control configuration 2-1119
6630 – Upper/lower torque limit 2-1120
6640 – Current/power/torque limits 2-1121
6710 – Current setpoint filter 2-1122
6714 – Iq and Id controller 2-1123
6721 – Id setpoint (PEM, p0300 = 2) 2-1124
6722 – Field weakening characteristic, Id setpoint (ASM, p0300 = 1) 2-1125
6723 – Field weakening controller, flux controller (ASM, p0300 = 1) 2-1126
6724 – Field weakening controller (PEM, p0300 = 2) 2-1127
6730 – Interface to the Motor Module (ASM, p0300 = 1) 2-1128
6731 – Interface to the Motor Module (PEM, p0300 = 2) 2-1129
6799 – Display signals 2-1130

2.15 Technology functions 2-1131
7010 – Friction characteristic 2-1132
7014 – External Armature Short-Circuit (EASC, p0300 = 2xx or 4xx) 2-1133
7016 – Internal Armature Short-Circuit (IASC, p0300 = 2xx or 4xx) 2-1134
7017 – DC braking (p0300 = 1xx) 2-1135
7020 – Synchronization 2-1136

2.16 Technology controller 2-1137
7950 – Fixed values, binary selection (r0108.16 = 1 and p2216 = 2) 2-1138
7951 – Fixed values, direct selection (r0108.16 = 1 and p2216 = 1) 2-1139
7954 – Motorized potentiometer (r0108.16 = 1) 2-1140
7958 – Closed-loop control (r0108.16 = 1) 2-1141
7960 – DC-link voltage controller (r0108.16 = 1) 2-1142

2.17 Signals and monitoring functions 2-1143
8010 – Speed signals 1 2-1144
8011 – Speed signals 2 2-1145
8012 – Torque signals, motor locked/stalled 2-1146

© Siemens AG 2012 All Rights Reserved

8013 – Load monitoring (r0108.17 = 1) 2-1147
8014 – Thermal monitoring, power unit 2-1148
8016 – Thermal monitoring, motor 2-1149
8017 – Thermal motor models (p0300 = xxx) 2-1150

2.18 Diagnostics 2-1151
8060 – Fault buffer 2-1152
8065 – Alarm buffer 2-1153
8070 – Fault/alarm trigger word (r2129) 2-1154
8075 – Fault/alarm configuration 2-1155
8134 – Measuring sockets 2-1156

2.19 Data sets 2-1157
8560 – Command Data Sets (CDS) 2-1158
8565 – Drive Data Sets (DDS) 2-1159
8570 – Encoder Data Sets (EDS) 2-1160
8575 – Motor Data Sets (MDS) 2-1161
8580 – Power unit Data Sets (PDS) 2-1162

2.20 Basic Infeed 2-1163
8720 – Control word, sequence control infeed 2-1164
8726 – Status word, sequence control infeed 2-1165
8732 – Sequencer 2-1166
8734 – Missing enable signals, line contactor control 2-1167
8750 – Interface to the Basic Infeed power unit (control signals, actual values) 2-1168
8760 – Signals and monitoring functions (p3400.0 = 0) 2-1169

2.21 Terminal Board 30 (TB30) 2-1170
9100 – Digital inputs, electrically isolated (DI 0 ... DI 3) 2-1171
9102 – Digital outputs, electrically isolated (DO 0 ... DO 3) 2-1172
9104 – Analog inputs (AI 0 ... AI 1) 2-1173
9106 – Analog outputs (AO 0 ... AO 1) 2-1174

2.22 Communication Board CAN10 (CBC10) 2-1175
9204 – Receive telegram, free PDO mapping (p8744 = 2) 2-1176
9206 – Receive telegram, Predefined Connection Set (p8744 = 1) 2-1177
9208 – Send telegram, free PDO mapping (p8744 = 2) 2-1178
9210 – Send telegram, Predefined Connection Set (p8744 = 1) 2-1179

© Siemens AG 2012 All Rights Reserved

9220 – Control word, CANopen 2-1180
9226 – Status word, CANopen 2-1181

2.23 Terminal Module 31 (TM31) 2-1182
9550 – Digital inputs, electrically isolated (DI 0 ... DI 3) 2-1183
9552 – Digital inputs, electrically isolated (DI 4 ... DI 7) 2-1184
9556 – Digital relay outputs, electrically isolated (DO 0 ... DO 1) 2-1185
9560 – Digital inputs/outputs, bidirectional (DI/DO 8 ... DI/DO 9) 2-1186
9562 – Digital inputs/outputs, bidirectional (DI/DO 10 ... DI/DO 11) 2-1187
9566 – Analog input 0 (AI 0) 2-1188
9568 – Analog input 1 (AI 1) 2-1189
9572 – Analog outputs (AO 0 ... AO 1) 2-1190
9576 – Temperature evaluation (KTY/PTC) 2-1191

2.24 Terminal Module 150 (TM150) 2-1192
9625 – Temperature evaluation structure (channel 0 ... 11) 2-1193
9626 – Temperature evaluation 1x2, 3, 4-wire (channel 0 ... 5) 2-1194
9627 – Temperature evaluation 2x2-wire (channel 0 ... 11) 2-1195

2.25 Voltage Sensing Module (VSM) 2-1196
9880 – Analog inputs (AI 0 ... AI 3) 2-1197
9886 – Temperature evaluation 2-1198

2.26 Basic Operator Panel 20 (BOP20) 2-1199
9912 – Control word interconnection 2-1200

© Siemens AG 2012 All Rights Reserved

2.2 Explanations on the function diagrams

Function diagrams

1020 – Explanation of the symbols (Part 1)	2-981
1021 – Explanation of the symbols (Part 2)	2-982
1022 – Explanation of the symbols (Part 3)	2-983
1030 – Handling BICO technology	2-984

© Siemens AG 2012 All Rights Reserved

Parameter

Symbol	Meaning
Parameter name [Unit] rxxxx [x...y]	Monitoring parameter (parameter may appear .
Parameter name [Unit] Index name rxxxx[x]	Monitoring parameter with index.
[aaaa.b] Parameter name from ... to [Unit] pxxxx[y...z] (Def)	Setting parameter (if the parameter appears a multiple number of times, then diagram references are specified).
[aaaa.b] Parameter name Index name from ... to [Unit] pxxxx[y] (Def)	Setting parameter with index (if the parameter appears a multiple number of times, then diagram references are specified).

Connectors

Symbol	Meaning
name pxxxx (xxxx)	Connector input CI.
name pxxxx[y] (xxxx [x])	Connector input CI with index [y]
name pxxxx[y...z] (xxxx [y])	Connector input CI with index range [y...z]
name [unit] rxxxx[y...z]	Connector output CO with [dimension unit] and index range [y...z].
name [unit] rxxxx[y]	Connector output CO [dimension unit] and with index [y]

Binectors

Symbol	Meaning
name pxxxx (Def)	Binektor input BI with factory setting (Def).
name pxxxx[y] (Def)	Binector input BI with index [y] and factory setting (Def).
name pxxxx[y...z] (Def)	Binector input BI with index range [y...z] and factory setting (Def).
name rxxxx	Binector output BO.
name rxxxx.y	Binector output BO with bit y.

Connectors/binectors

Symbol	Meaning
Parameter name rxxxx rxxxx	Konnektor-/Binektorausgang CO/BO

Cross references between diagrams

Symbol	Meaning
1 ... 8 (Signal path 1 ... Signal path 8)	The function diagrams are sub-divided into 8 signal paths in order to facilitate orientation.
Text → [aaaa.b]	Text = Unique signal designation aaaa = Signal goes to target diagram aaaa b = Signal goes to signal path b
[cccc.d] → Text	Text = Unique signal designation cccc = Signal comes from source diagram cccc d = Signal comes from signal path d

To "function diagram name" [aaaa.b] = for binectors.

Cross references for control bits

Symbol	Meaning
pxxxx [aaaa.b]	pxxxx= Original parameter of signal aaaa = Signal comes from source diagram aaaa b = Signal comes from signal path b

Data sets

Symbol	Meaning
pxxxx[C]	Parameter belongs to the Command Data Set (CDS).
pxxxx[D]	Parameter belongs to the Drive Data Set (DDS).
pxxxx[E]	Parameter belongs to the Encoder Data Set (EDS).
pxxxx[M]	Parameter belongs to the Motor Data Set (MDS).
pxxxx[P]	Parameter belongs to the Power unit Data Set (PDS).

Information on parameters, binectors, connectors

Symbol	Meaning
Parameter name	Parameter name (up to 18 characters)
[Unit]	[dimension unit] rotatry axis, for linear axis see list of parameters
rxxxx[y] or rxxxx[y...z] or rxxxx[y].ww or rxxxx.ww	"r" = monitoring parameter. These parameters are read-only "xxxx" stands for the parameter number "[y]" specifies the valid index, "[y...z]" specifies the applicable index range ".ww" specifies the bit number (e.g. 0...15).
pxxxx[y] or pxxxx[y...z] or pxxxx[y].ww or pxxxx.ww	"p" = setting parameter. These parameters can be changed. "xxxx" stands for the parameter number, "[y]" specifies the applicable index, "[y...z]" specifies the applicable index range ".ww" specifies the bit number (e.g. 0...15).
from ... to	Value range.
(xxxx[y].ww)	Parameter number (xxxx) with Index number [y] and bit number .ww.
(Def)	Factory setting.
(Def.w)	Factory setting with bit number as prefix.
[aaaa.b]	Diagram references for setting parameters that occur a multiple number of times. [Function diagram number, signal path]

Sampling times

Symbol	Meaning
pxxxx[Y] (ZZZ.ZZ µs)	Setting parameter with factory setting to select the time slice.
p0115[y] (Drive Object)	Time slice depending on the pre-setting p0112 of the drive object. "[y]" specifies the applicable index.
p0115[y] (Motor Modules)	Time slice depending on the rated pulse frequency of the motor module. "[y]" specifies the applicable index.
PROFIdrive sampling time	Presetting for IF1 in p2048. Presetting for IF2 in p8848. The bus clock applies to a clock synchronized operate to IF1 or IF2.
CAN bus sampling time	Presetting in p8848.
Background	There is no fixed sampling time for this function. The processing takes place in background. The cycle time depends on the computational load of the control unit.
Not relevant	A static state is displayed here. The sampling time data is not relevant.

Fig. 2-1 1020 – Explanation of the symbols (Part 1)

© Siemens AG 2012 All Rights Reserved

Pre-assigned binectors and connectors

Fixed percentage values

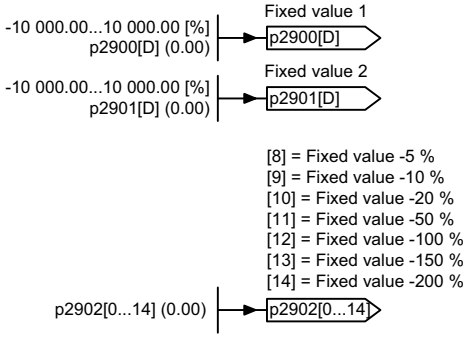

Pre-assigned binectors and connectors

Fixed speed values

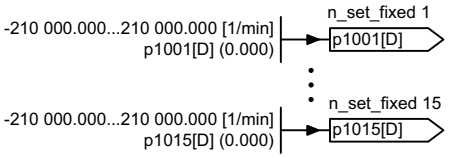

Pre-assigned binectors and connectors

Fixed torque values

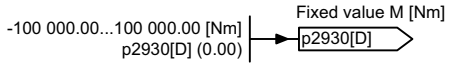

Switch symbol

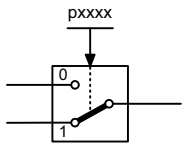

Simple changeover switch

The switch position is shown according to the factory setting
(in this case, switch position 1 in the default state on delivery).

Symbols for logic functions

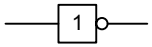

Logical inversion

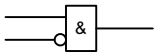

AND element with logical inversion of an input signal

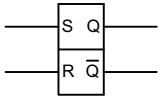

R/S flip-flop

S = setting input
R = reset input
Q = non-inverted output
$\overline{Q}$ = inverted output

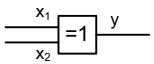

Exclusiv-OR/XOR

$y = 1$ when $x_1 \neq x_2$ is.

Symbols for computational and closed-loop control functions

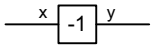

Sign reversal

$y = -x$

Absolute value generator

$y = |x|$

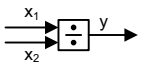

Divider

$y = \frac{x_1}{x_2}$

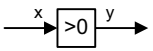

Comparator

Output y = a logical "1", if the analog signal x > 0, i.e. is positive.

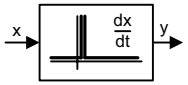

Differentiator

$y = \frac{dx}{dt}$

Symbol for monitoring

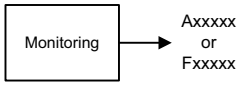

Monitoring

In the bottom right-hand corner of the diagram.

Symbols for computational and closed-loop control functions

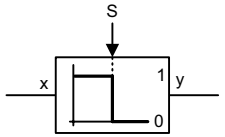

Threshold value switch 1/0

Outputs at y a logical "1" if x < S.

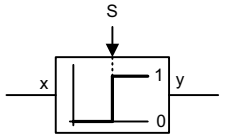

Threshold value switch 0/1

Outputs at y a logical "1" if x > S.

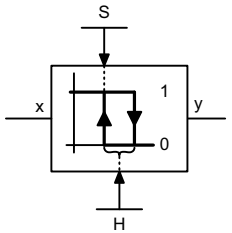

Threshold value 1/0 with hysteresis

Outputs a logical "1" at y if x < S.

If x >= S + H then y returns to 0.

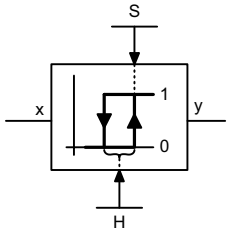

Threshold value 0/1 with hysteresis

Outputs a logical "1" at y if x > S.

If x <= S - H then y returns to 0.

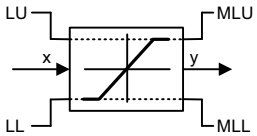

Limiter

x is limited to the upper limit LU and the lower limit LL and output at y.
The digital signals MLU and MLL have the value "1", if the upper or lower limit is active.

Sample & Hold element

Sample and hold element.
y = x if SET = 1
(not retentively saved at POWER OFF)

1	2	3	4	5	6	7	8
DO: All objects					fp_1021_51_eng.vsd	Function diagram	- 1021 -
Explanations for the function diagrams - Explanation of the symbols (Part 2)					01.07.08 V04.05.00	SINAMICS	

Fig. 2-2 1021 – Explanation of the symbols (Part 2)

© Siemens AG 2012 All Rights Reserved

Switch-on delay

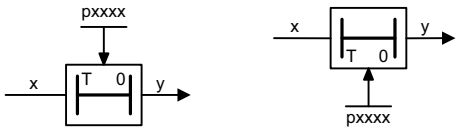

The digital signal x must have the value "1" without any interruption during the time T before output y changes to "1".

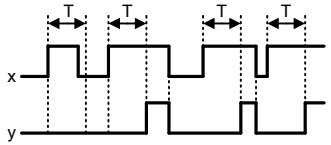

Switch-off delay

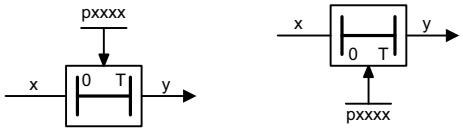

The digital signal x must have the value "0" without interruption during the time T before output y changes to "0".

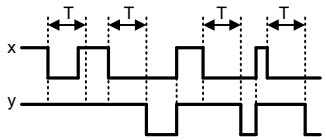

Delay (switch-on and switch-off)

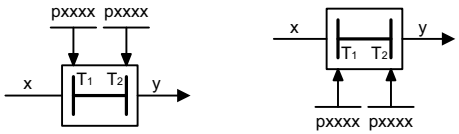

The digital signal x must have the value "1" without interruption during time T_1 or must have the value "0" during time T_2 before output y changes its signal state.

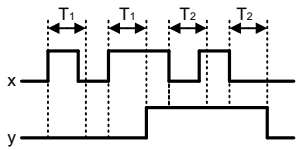

PT1 element

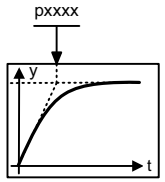

Delay element, first order.

pxxxx = time constant

2nd-order filter (bandstop/general filter)

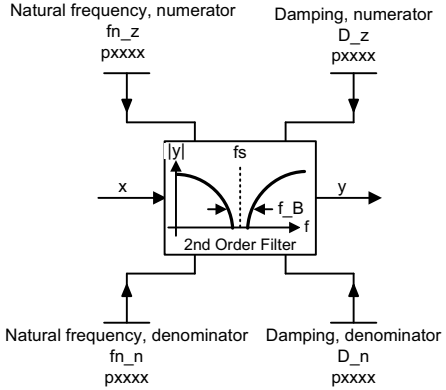

Used as bandstop filter - center frequency fs: $fn\_z = fs$, $fn\_n = fs$

- bandwidth f_B: $D\_z = 0$, $D\_n = \frac{f\_B}{2 \cdot fs}$

Transfer function when used as general filter

$$H(s) = \frac{\left(\frac{s}{2\pi fn\_z}\right)^2 + \frac{2 \cdot D\_z}{2\pi fn\_z} \cdot s + 1}{\left(\frac{s}{2\pi fn\_n}\right)^2 + \frac{2 \cdot D\_n}{2\pi fn\_n} \cdot s + 1}$$

Analog adder can be activated

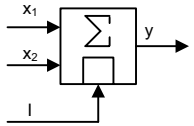

The following applies to I = 1 signal: $y = x_1 + x_2$

The following applies to I = 0 signal: $y = x_1$

PT2 low pass

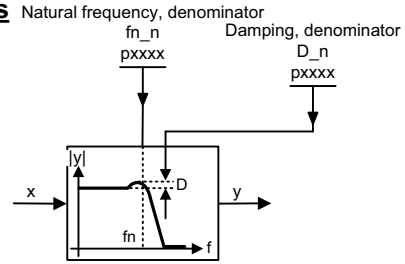

Transfer function

$$H(s) = \frac{1}{\left(\frac{s}{2\pi fn\_n}\right)^2 + \frac{2 \cdot D\_n}{2\pi fn\_n} \cdot s + 1}$$

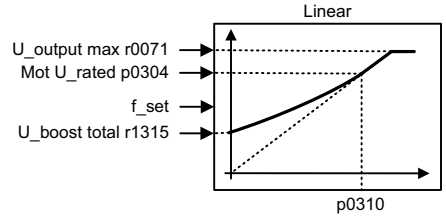

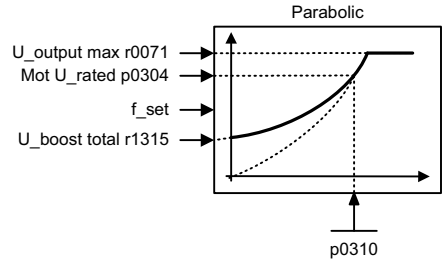

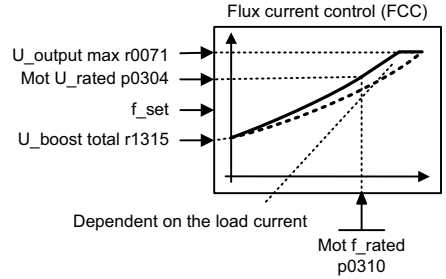

1	2	3	4	5	6	7	8
DO: All objects					fp_1022_51_eng.vsd	Function diagram	- 1022 -
Explanations for the function diagrams - Explanation of the symbols (Part 3)					22.11.10 V04.05.00	SINAMICS	

Fig. 2-3 1022 – Explanation of the symbols (Part 3)

© Siemens AG 2012 All Rights Reserved

Fig. 2-4 1030 – Handling BICO technology

Handling BICO technology

Binector: r0723.15

Binectors are binary signals that can be freely interconnected (BO = Binector Output).
They represent a bit of a "BO:" display parameter (e.g. bit 15 from r0723).

Connector: r0723

Connectors are bit fields or numerical values that can be freely interconnected (e.g. "analog signals", like percentage variables, speeds or torques).
Connectors are also "CO:" display parameters (CO = Connector Output).

Parameterization:

At the signal destination, the required binector or connector is selected using appropriate parameters:
"BI:" parameter for binectors (BI = Binector Input)
or
"CI:" parameter for connectors (CI = Connector Input)

Example:

The main setpoint for the speed controller (CI: p1070) should be received from the output of the motorized potentiometer (CO: r1050) and the "jog" command (BI: p1055) from digital input DI 0 (BO: r0722.0, X122.1 terminal) on the CU320.

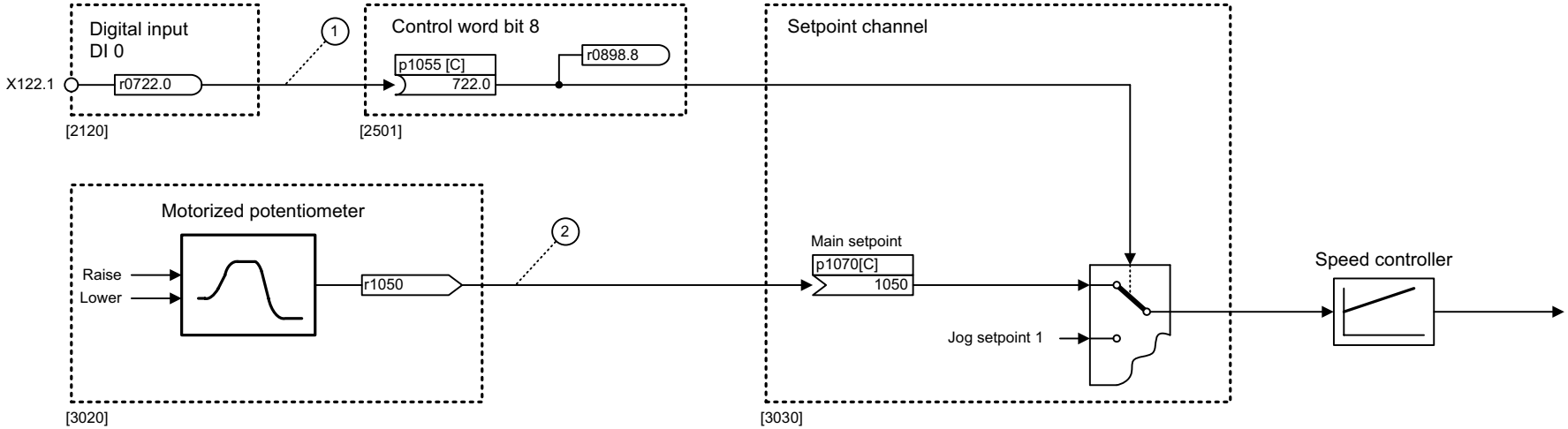

Parameterizing steps:

(1) p1055[0] = 722.0 Terminal X122.1 acts as "Jog bit 0".

(2) p1070[0] = 1050 The output of the motorized potentiometer acts as main setpoint for the speed controller.

1	2	3	4	5	6	7	8
DO: All objects					fp_1030_51_eng.vsd	Function diagram	- 1030 -
Explanations for the function diagrams - Handling BICO technology					10.05.11 V04.05.00	SINAMICS	

© Siemens AG 2012 All Rights Reserved

2.3 Overviews

Function diagrams

1510 – CU320-2 input/output terminals	2-986
1520 – PROFIdrive	2-987
1530 – Internal control/status words, data sets	2-988
1550 – Setpoint channel	2-989
1680 – Vector control, encoder evaluations (position, speed, temperature)	2-990
1690 – Vector control, V/f control	2-991
1700 – Vector control, speed control and generation of the torque limits	2-992
1710 – Vector control, current control	2-993
1750 – Monitoring functions, faults, alarms	2-994
1773 – Basic Infeed	2-995
1790 – Terminal Board 30 (TB30)	2-996
1840 – Terminal Module 31 (TM31)	2-997
1850 – Terminal Module 54F (TM54F)	2-998

© Siemens AG 2012 All Rights Reserved

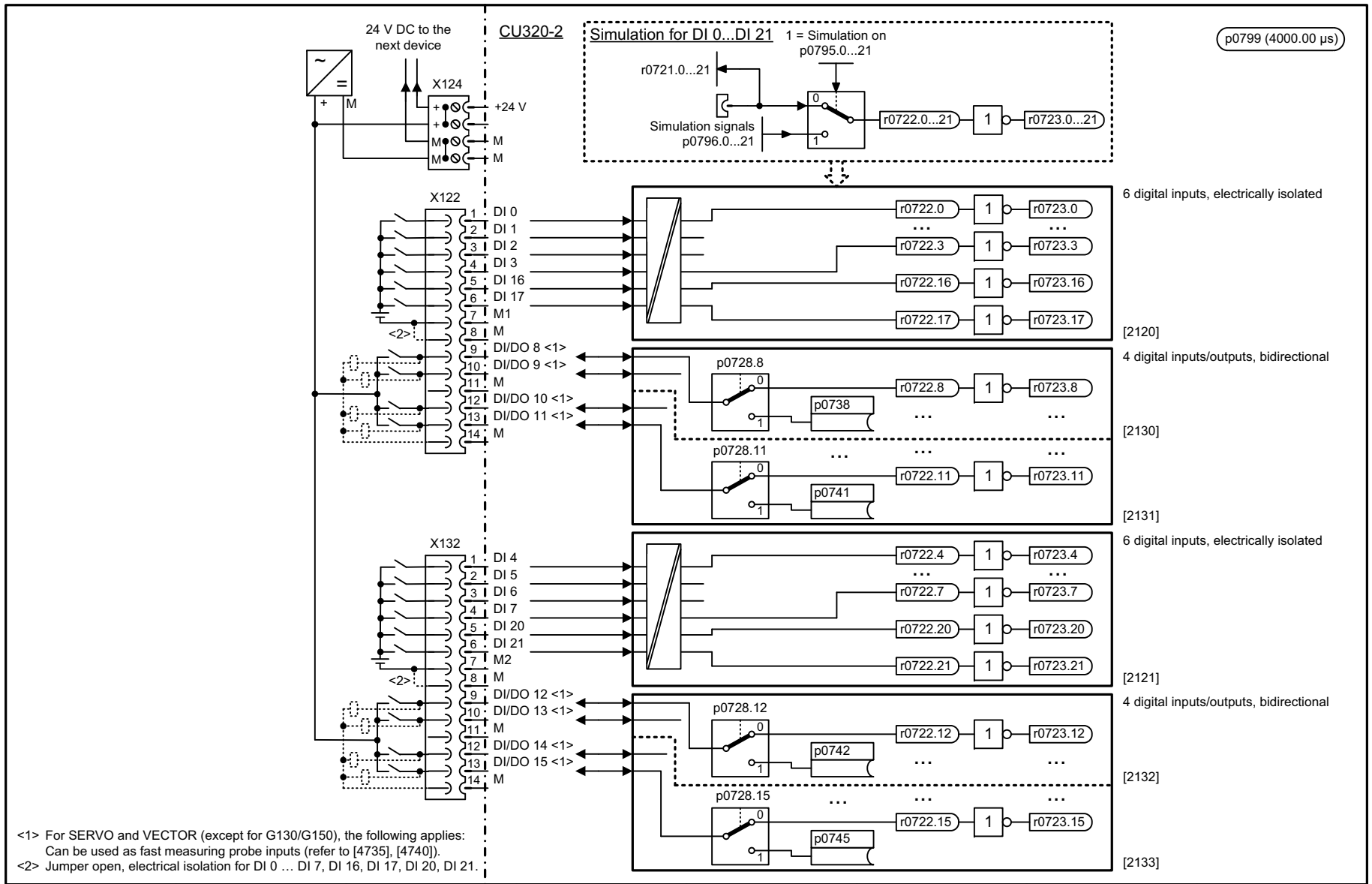

Fig. 2-5 1510 – CU320-2 input/output terminals

1	2	3	4	5	6	7	8
DO: CU_G, CU_GL, CU_GM, CU_MV, CU_S, CU_SL					fp_1510_51_eng.vsd	Function diagram	- 1510 -
Overviews - CU320-2 input/output terminals					30.09.11 V04.05.00	SINAMICS	

© Siemens AG 2012 All Rights Reserved

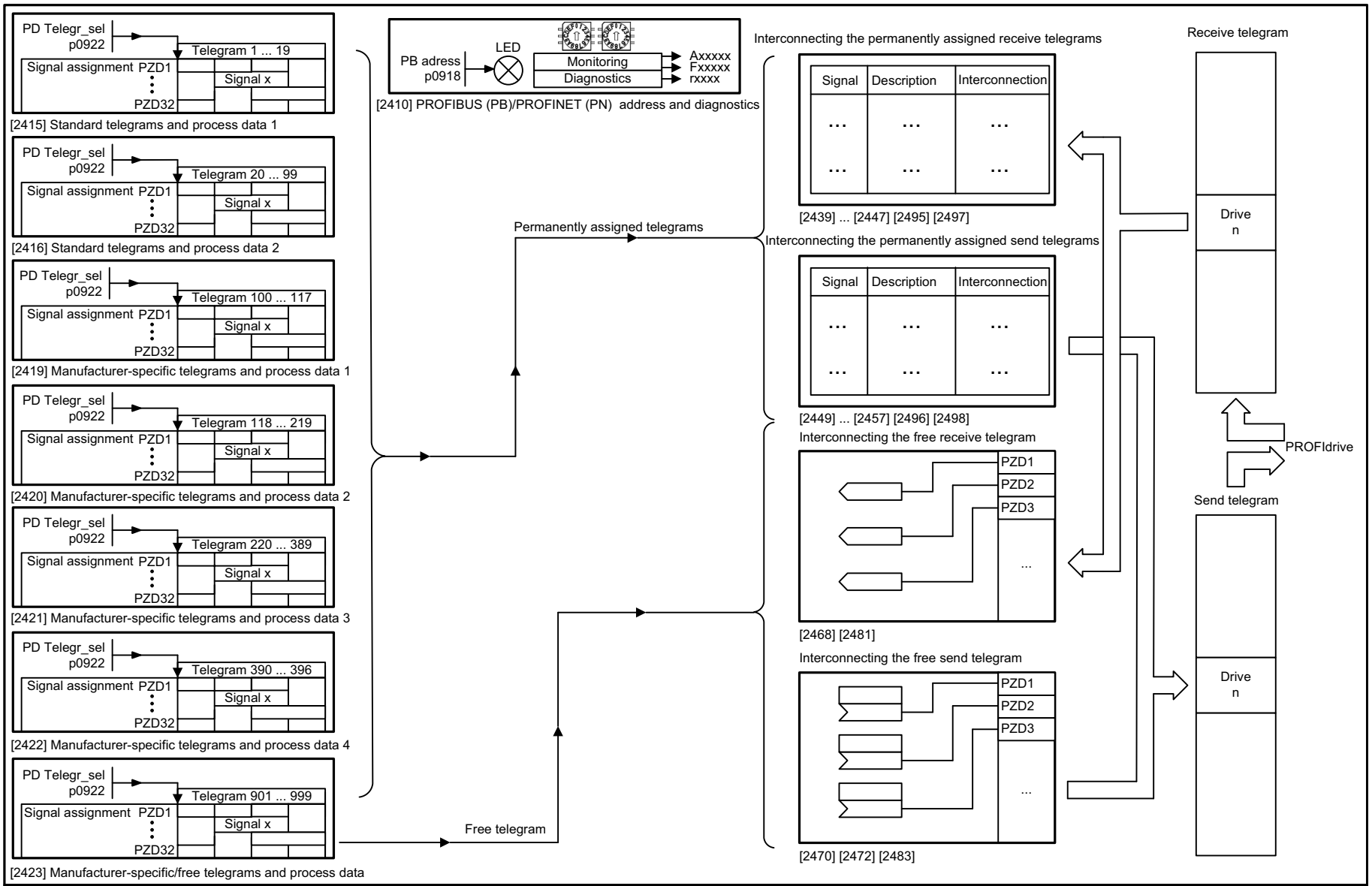

1	2	3	4	5	6	7	8
DO: All objects					fp_1520_54_eng.vsd	Function diagram	- 1520 -
Overviews - PROFIdrive					21.11.11 V04.05.00	S120/S150/G130/G150	

Fig. 2-6 1520 – PROFIdrive

© Siemens AG 2012 All Rights Reserved

Fig. 2-7 1530 – Internal control/status words, data sets

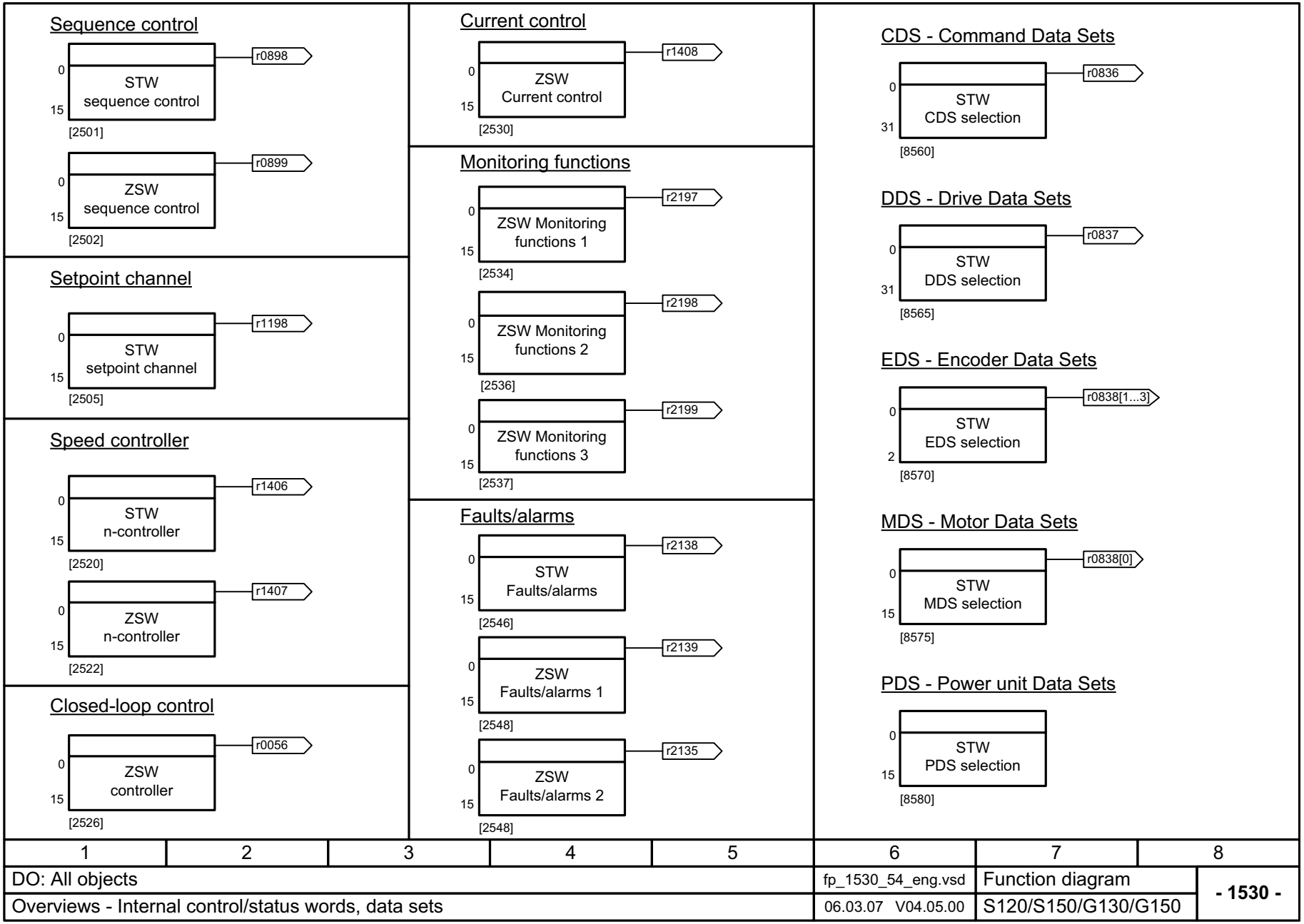

© Siemens AG 2012 All Rights Reserved

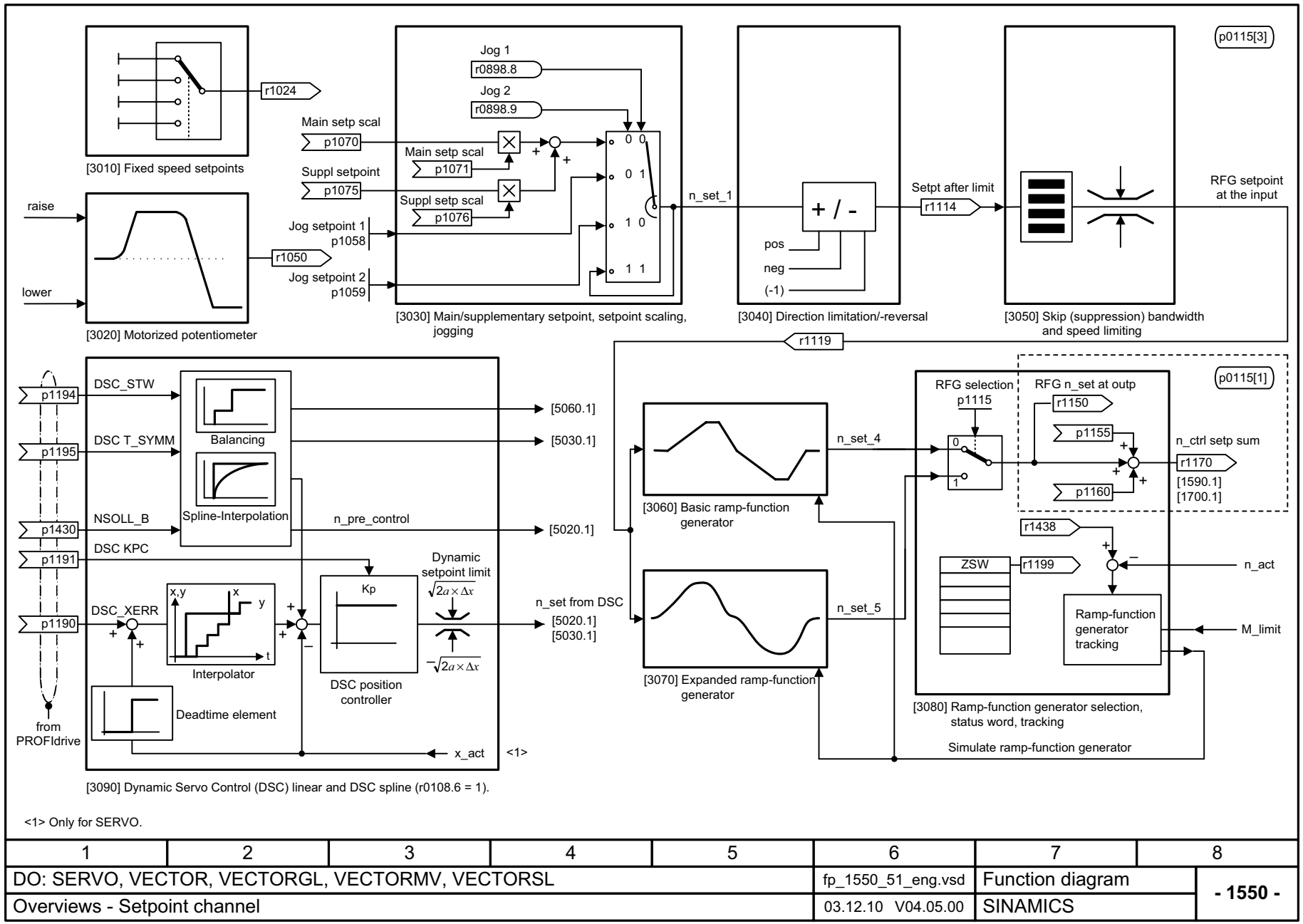

<1> Only for SERVO.

1	2	3	4	5	6	7	8
DO: SERVO, VECTOR, VECTORGL, VECTORMV, VECTORSL					fp_1550_51_eng.vsd	Function diagram	- 1550 -
Overviews - Setpoint channel					03.12.10 V04.05.00	SINAMICS	

Fig. 2-8 1550 – Setpoint channel

© Siemens AG 2012 All Rights Reserved

Fig. 2-9 1680 – Vector control, encoder evaluations (position, speed, temperature)

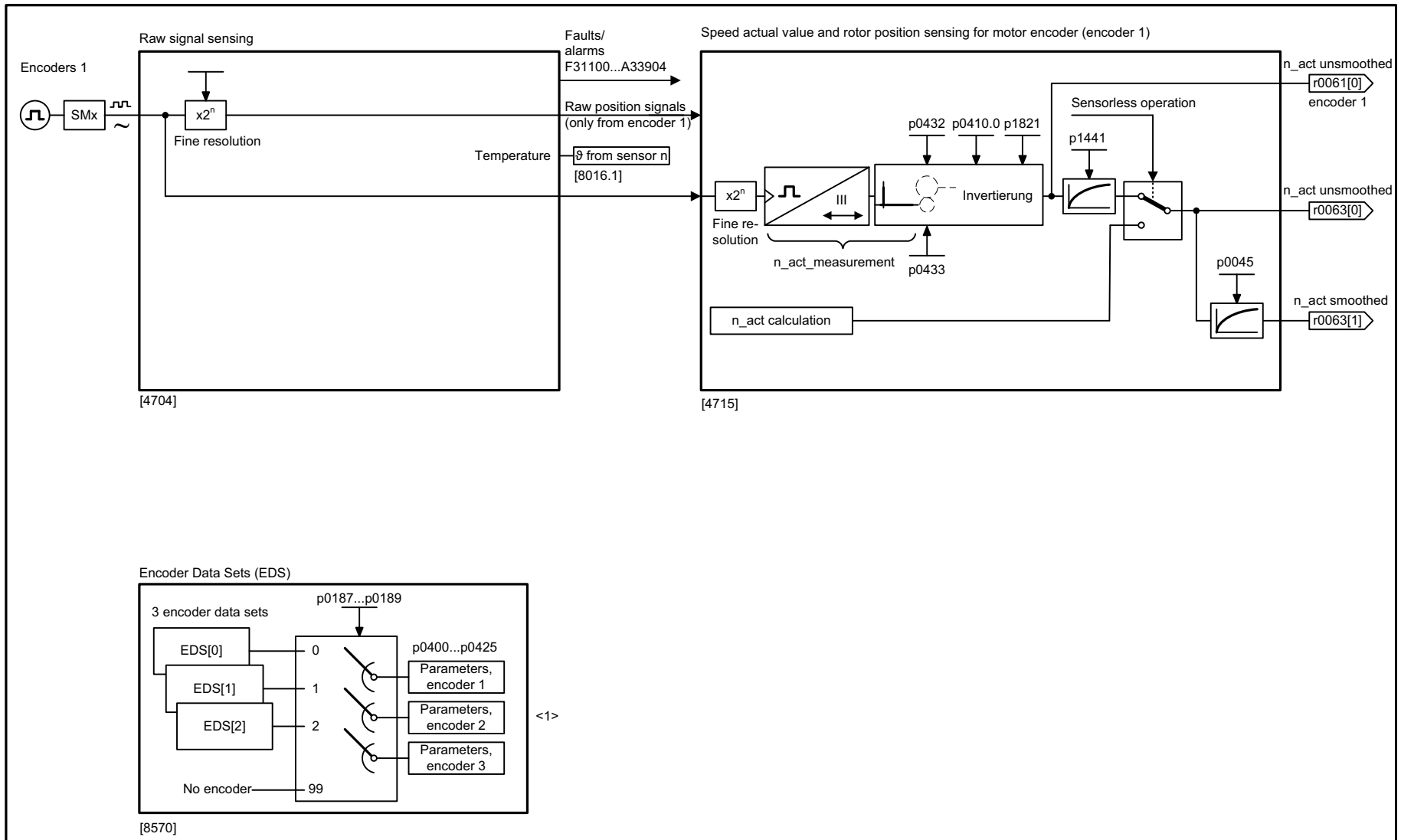

<1> Only 1 encoder for G130/G150.

1	2	3	4	5	6	7	8
DO: VECTOR					fp_1680_56_eng.vsd	Function diagram	- 1680 -
Overviews - Vector control, encoder evaluations (position, speed, temperature)					19.01.09 V04.05.00	SINAMICS G130/G150	

© Siemens AG 2012 All Rights Reserved

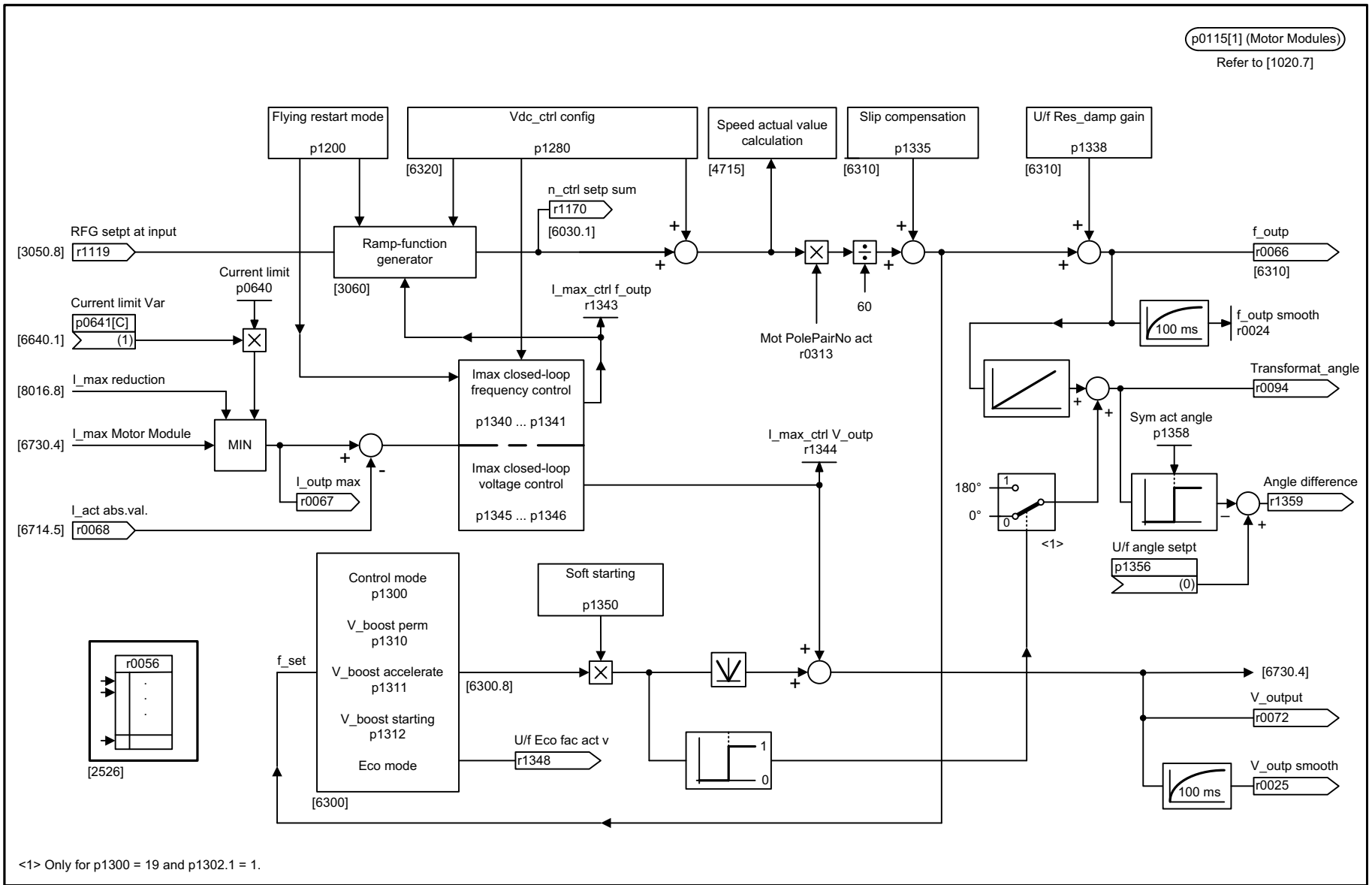

<1> Only for p1300 = 19 and p1302.1 = 1.

1	2	3	4	5	6	7	8
DO: VECTOR					fp_1690_54_eng.vsd	Function diagram	- 1690 -
Overviews - Vector control, U/f control					06.07.10 V04.05.00	S120/S150/G130/G150	

Fig. 2-10 1690 – Vector control, V/f control

© Siemens AG 2012 All Rights Reserved

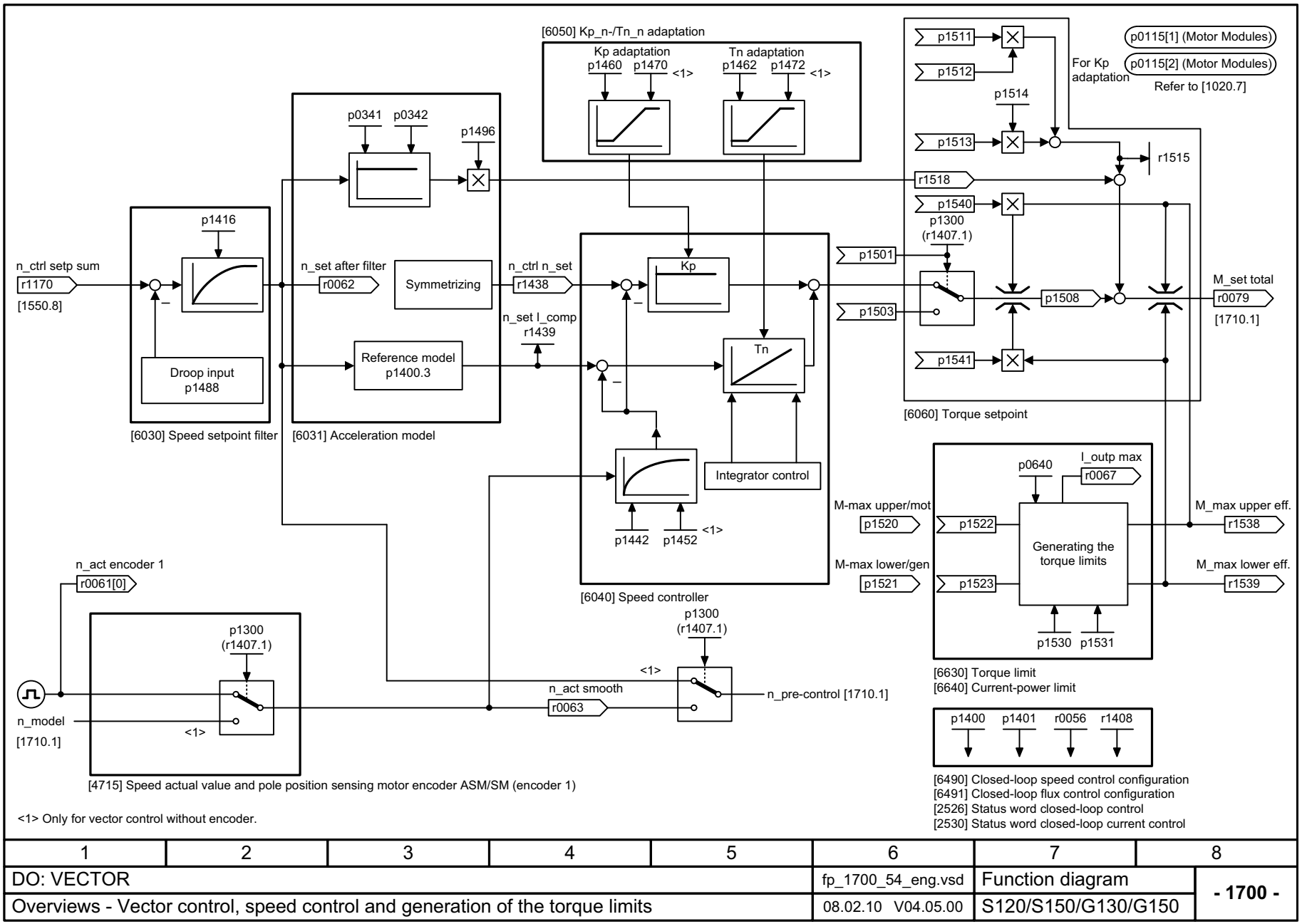

1	2	3	4	5	6	7	8
DO: VECTOR					fp_1700_54_eng.vsd	Function diagram	- 1700 -
Overviews - Vector control, speed control and generation of the torque limits					08.02.10 V04.05.00	S120/S150/G130/G150	

Fig. 2-11 1700 – Vector control, speed control and generation of the torque limits

© Siemens AG 2012 All Rights Reserved

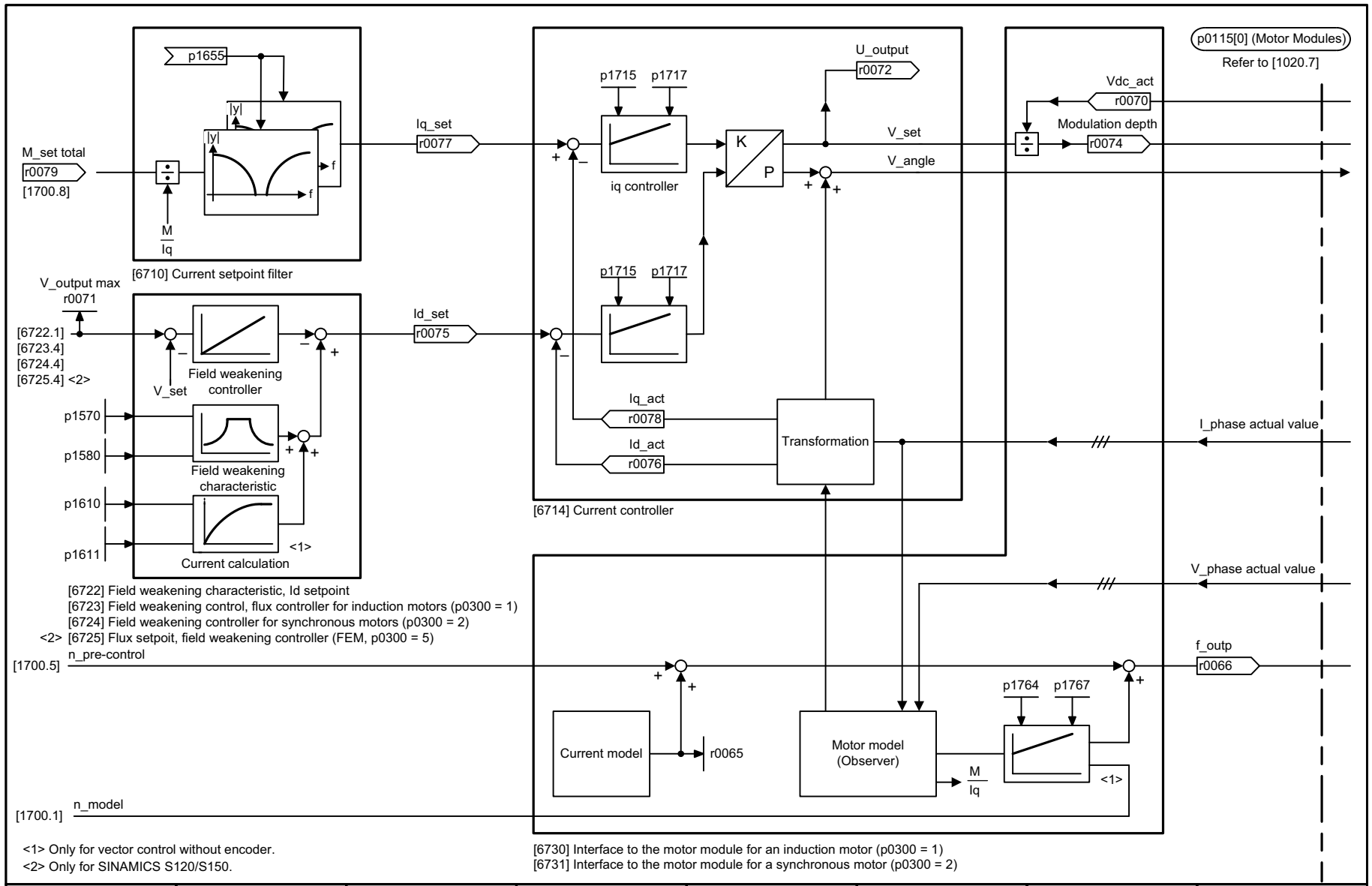

1	2	3	4	5	6	7	8
DO: VECTOR					fp_1710_54_eng.vsd	Function diagram	- 1710 -
Overviews - Vector control, current control					30.01.09 V04.05.00	S120/S150/G130/G150	

Fig. 2-12 1710 – Vector control, current control

© Siemens AG 2012 All Rights Reserved

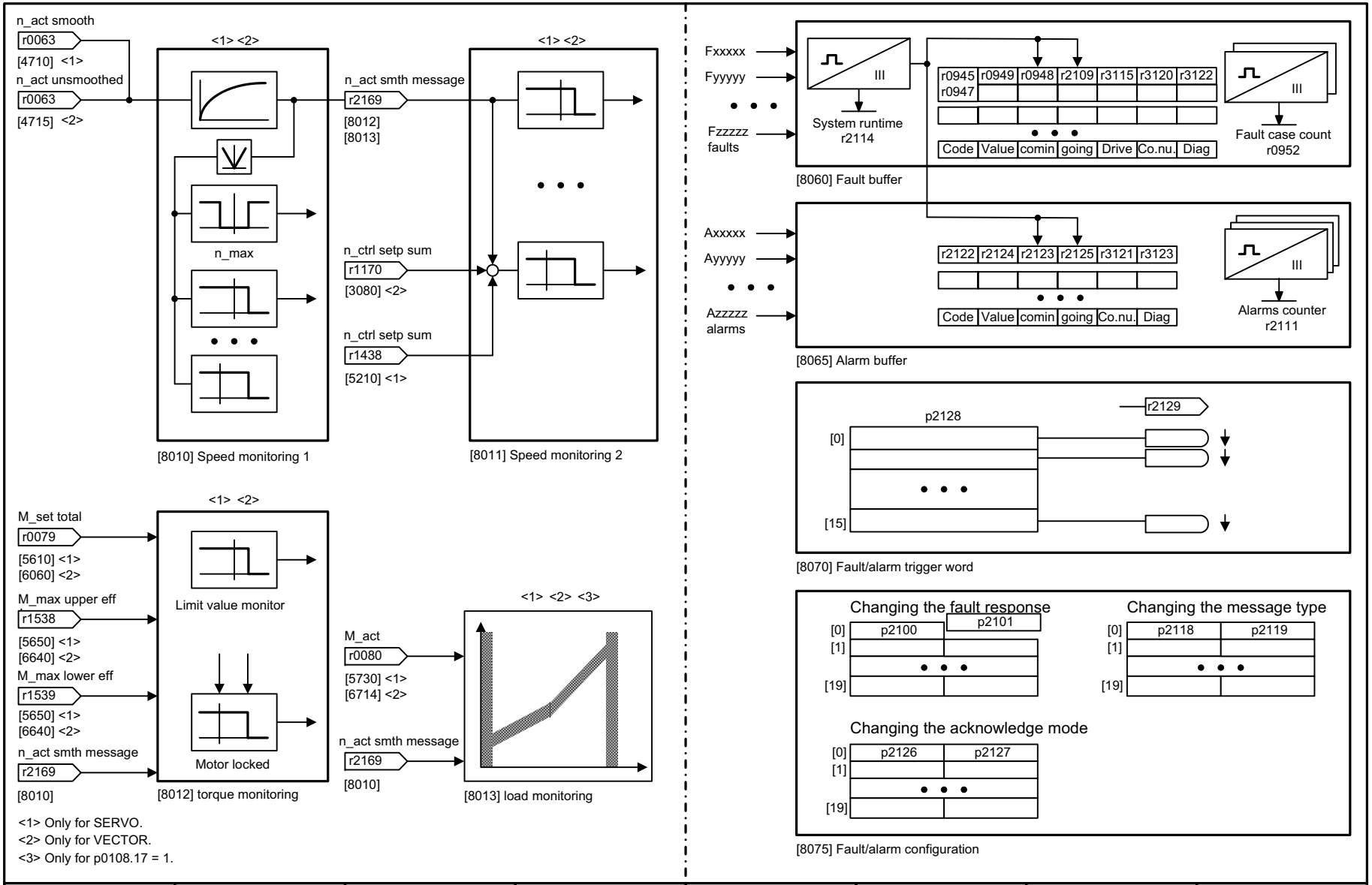

1	2	3	4	5	6	7	8
DO: All objects					fp_1750_51_eng.vsd	Function diagram	- 1750 -
Overviews - Monitoring functions, faults, alarms					24.03.11 V04.05.00	SINAMICS	

Fig. 2-13 1750 – Monitoring functions, faults, alarms

© Siemens AG 2012 All Rights Reserved

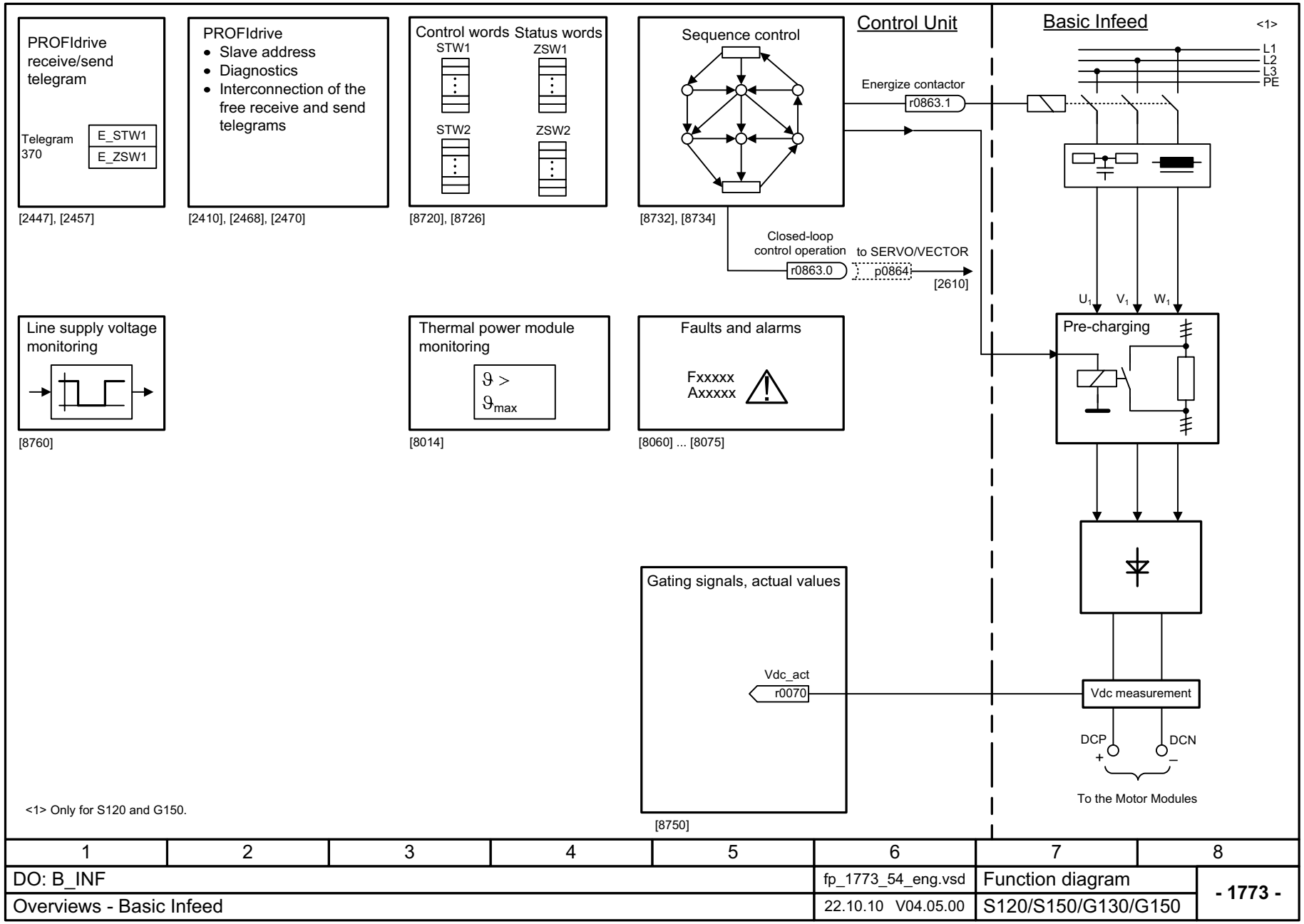

Fig. 2-14 1773 – Basic Infeed

1	2	3	4	5	6	7	8
DO: B_INF					fp_1773_54_eng.vsd	Function diagram	- 1773 -
Overviews - Basic Infeed					22.10.10 V04.05.00	S120/S150/G130/G150	

© Siemens AG 2012 All Rights Reserved

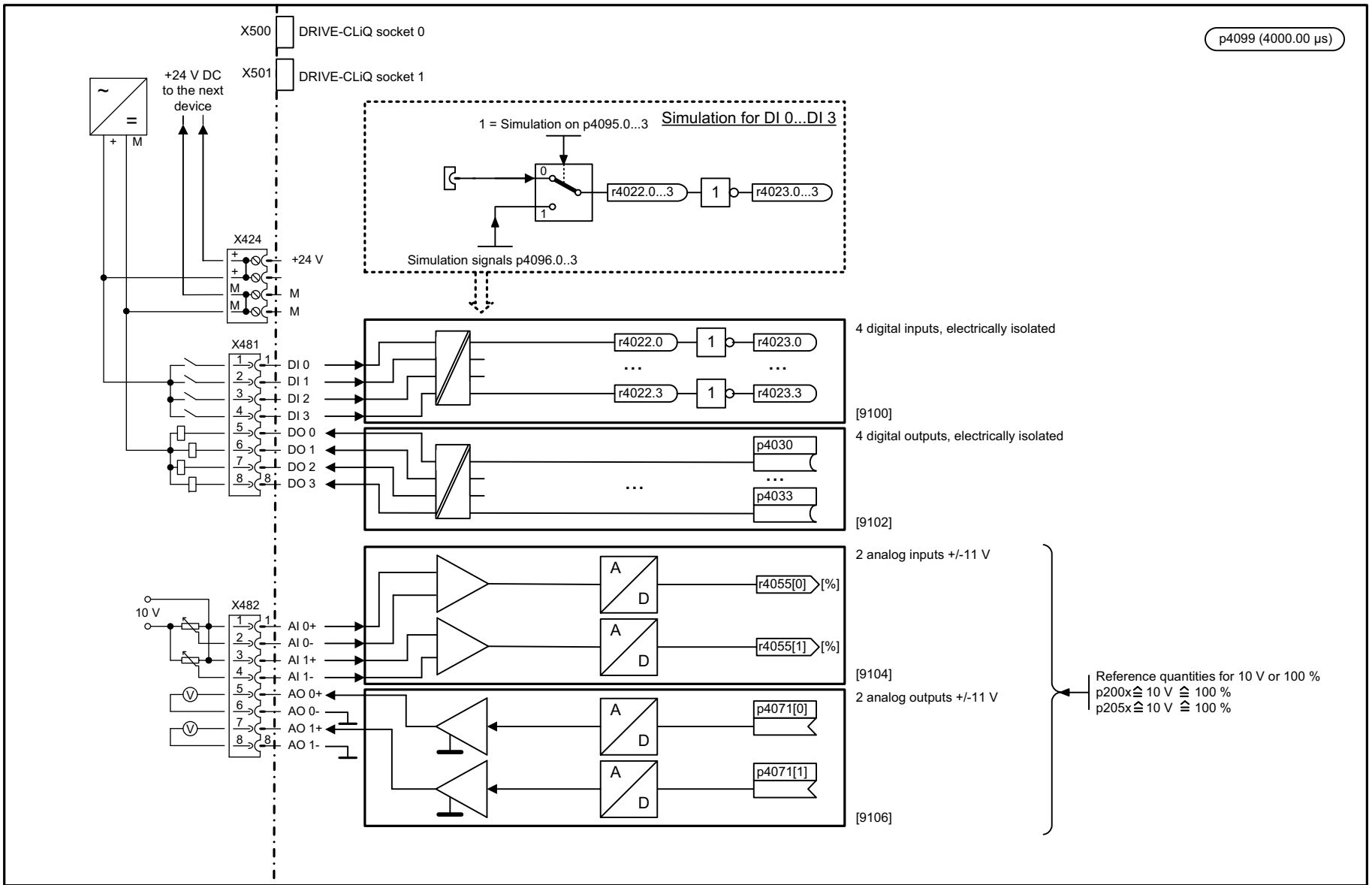

1	2	3	4	5	6	7	8
DO: TB30					fp_1790_51_eng.vsd	Function diagram	- 1790 -
Overviews - Terminal Board 30 (TB30)					24.03.11 V04.05.00	SINAMICS	

© Siemens AG 2012 All Rights Reserved

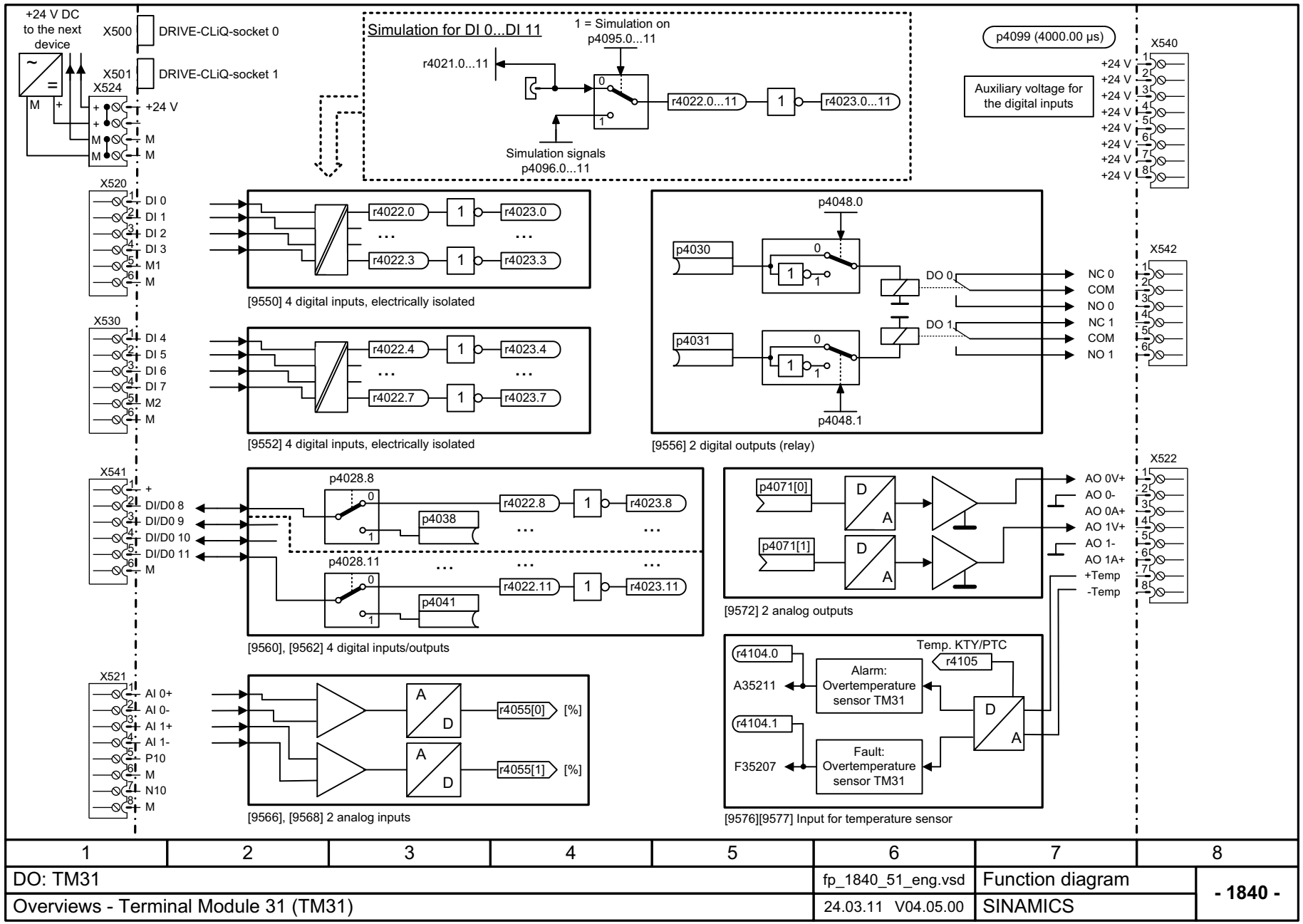

1	2	3	4	5	6	7	8
DO: TM31					fp_1840_51_eng.vsd	Function diagram	- 1840 -
Overviews - Terminal Module 31 (TM31)					24.03.11 V04.05.00	SINAMICS	

Fig. 2-16 1840 – Terminal Module 31 (TM31)

© Siemens AG 2012 All Rights Reserved

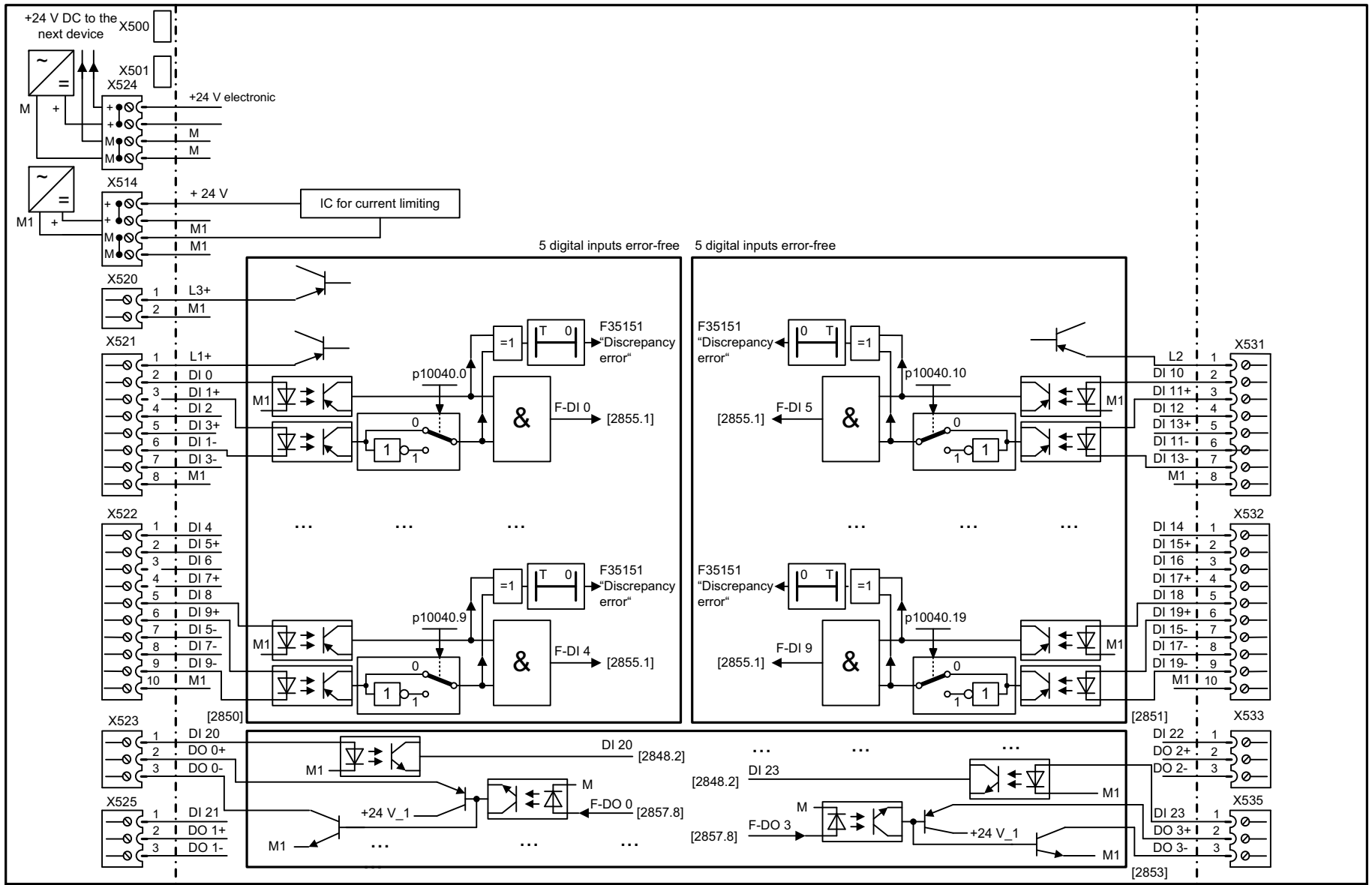

Fig. 2-17 1850 – Terminal Module 54F (TM54F)

1	2	3	4	5	6	7	8
DO : TM54F_MA, TM54F_SL					fp_1850_51_eng.vsd	Function diagram	- 1850 -
Overviews - Terminal Module 54F (TM54F)					06.04.11 V04.05.00	SINAMICS	

© Siemens AG 2012 All Rights Reserved

2.4 CU320-2 input/output terminals

Function diagrams

2120 – Digital inputs, electrically isolated (DI 0 ... DI 3, DI 16, DI 17)	2-1000
2121 – Digital inputs, electrically isolated (DI 4 ... DI 7, DI 20, DI 21)	2-1001
2130 – Digital inputs/outputs, bidirectional (DI/DO 8 ... DI/DO 9)	2-1002
2131 – Digital inputs/outputs, bidirectional (DI/DO 10 ... DI/DO 11)	2-1003
2132 – Digital inputs/outputs, bidirectional (DI/DO 12 ... DI/DO 13)	2-1004
2133 – Digital inputs/outputs, bidirectional (DI/DO 14 ... DI/DO 15)	2-1005

© Siemens AG 2012 All Rights Reserved

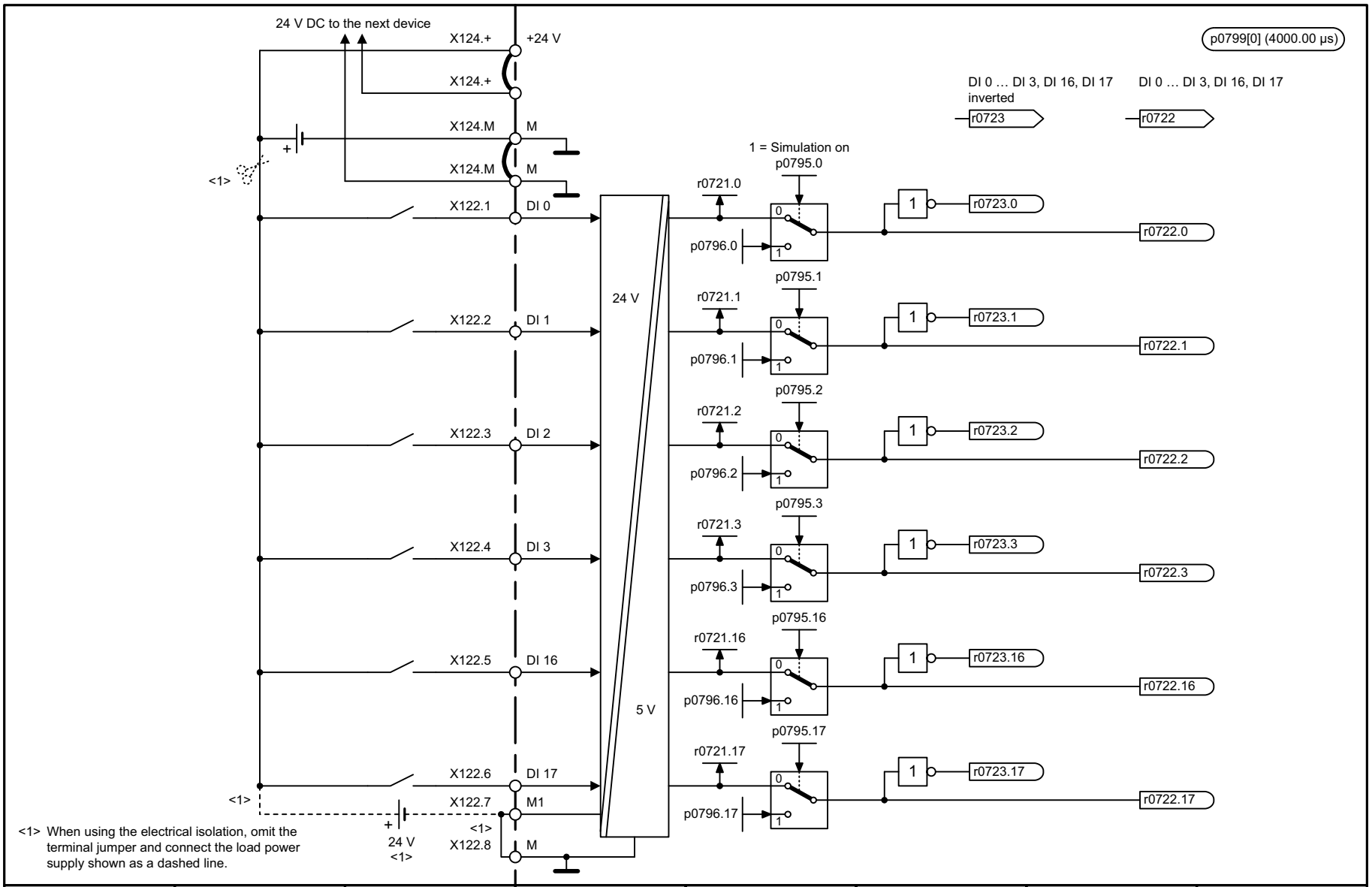

<1> When using the electrical isolation, omit the terminal jumper and connect the load power supply shown as a dashed line.

1	2	3	4	5	6	7	8
DO: CU_G, CU_GL, CU_GM, CU_MV, CU_S, CU_SL					fp_2120_51_eng.vsd	Function diagram	- 2120 -
CU320-2 input/output terminals - Digital inputs, electrically isolated (DI 0 ... DI 3, DI 16, DI 17)					07.12.11 V04.05.00	SINAMICS	

Fig. 2-18 2120 – Digital inputs, electrically isolated (DI 0 ... DI 3, DI 16, DI 17)

© Siemens AG 2012 All Rights Reserved

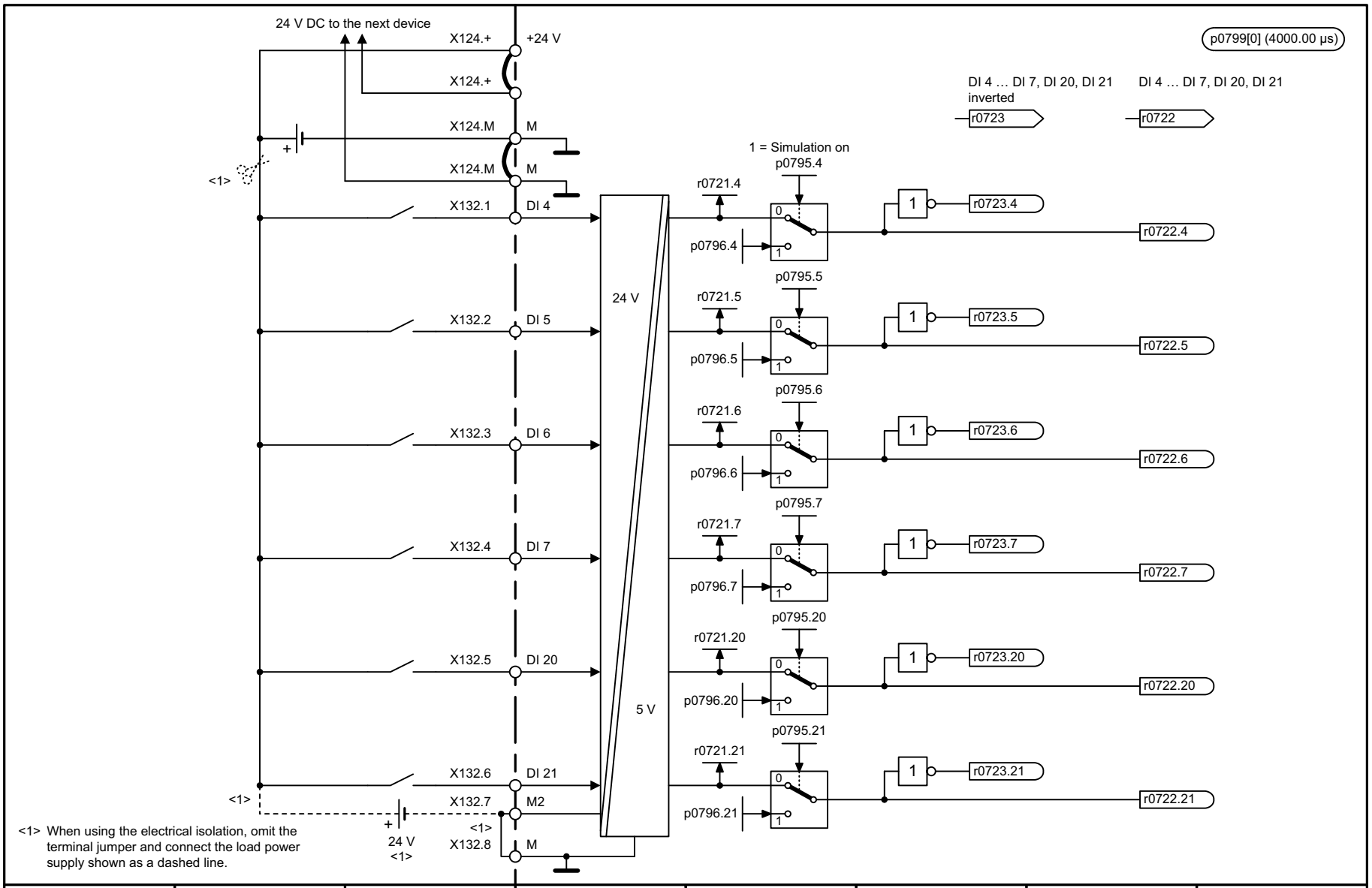

<1> When using the electrical isolation, omit the terminal jumper and connect the load power supply shown as a dashed line.

1	2	3	4	5	6	7	8
DO: CU_G, CU_GL, CU_GM, CU_MV, CU_S, CU_SL					fp_2121_51_eng.vsd	Function diagram	- 2121 -
CU320-2 input/output terminals - Digital inputs, electrically isolated (DI 4 ... DI 7, DI 20, DI 21)					07.12.11 V04.05.00	SINAMICS	

Fig. 2-19 2121 – Digital inputs, electrically isolated (DI 4 ... DI 7, DI 20, DI 21)

© Siemens AG 2012 All Rights Reserved

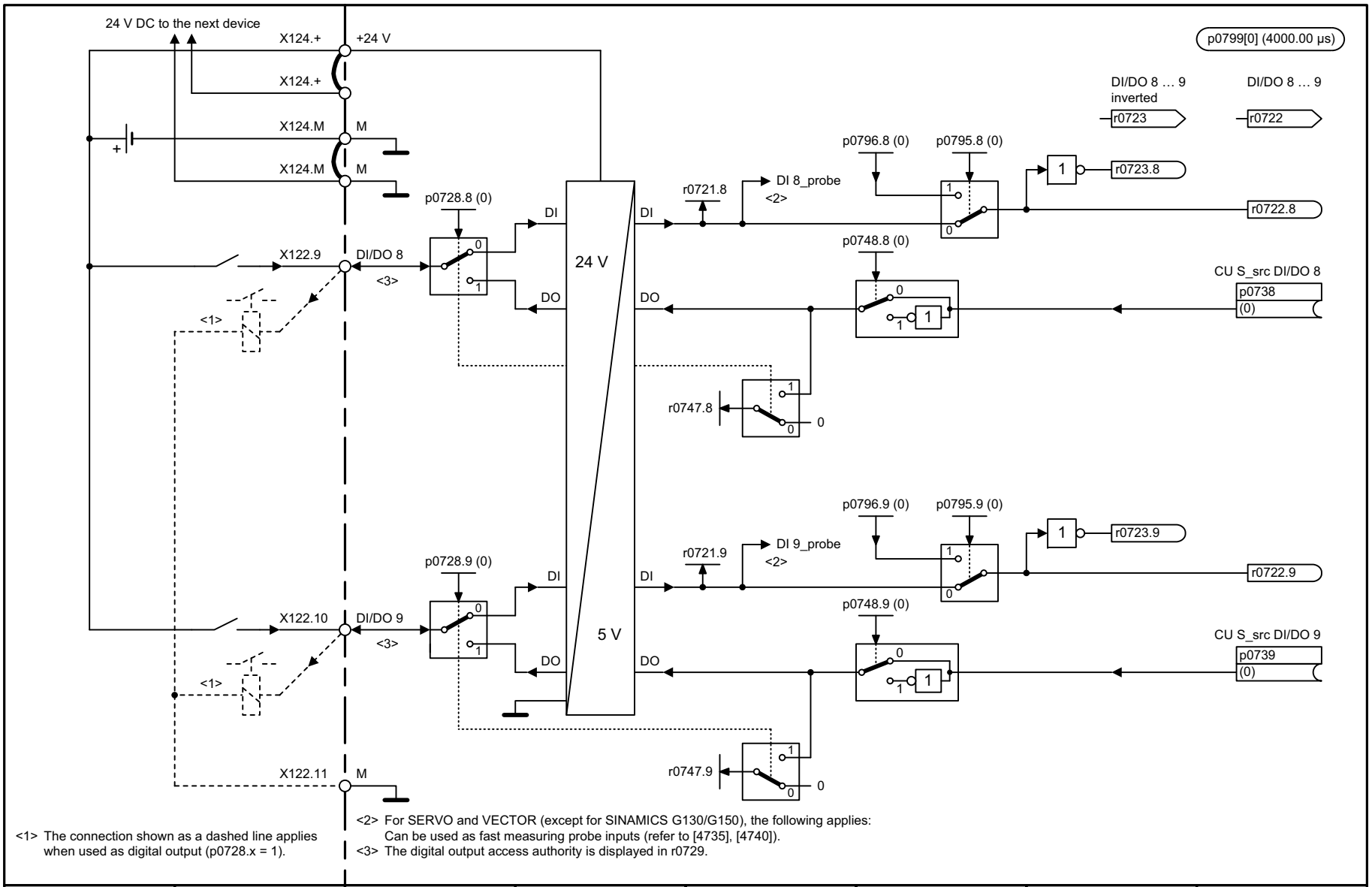

<1> The connection shown as a dashed line applies when used as digital output (p0728.x = 1).

<2> For SERVO and VECTOR (except for SINAMICS G130/G150), the following applies: Can be used as fast measuring probe inputs (refer to [4735], [4740]).

<3> The digital output access authority is displayed in r0729.

1	2	3	4	5	6	7	8
DO: CU_G, CU_GL, CU_GM, CU_MV, CU_S, CU_SL					fp_2130_51_eng.vsd	Function diagram	- 2130 -
CU320-2 input/output terminals - Digital inputs/outputs, bidirectional (DI/DO 8 ... DI/DO 9)					07.12.11 V04.05.00	SINAMICS	

Fig. 2-20 2130 – Digital inputs/outputs, bidirectional (DI/DO 8 ... DI/DO 9)

© Siemens AG 2012 All Rights Reserved

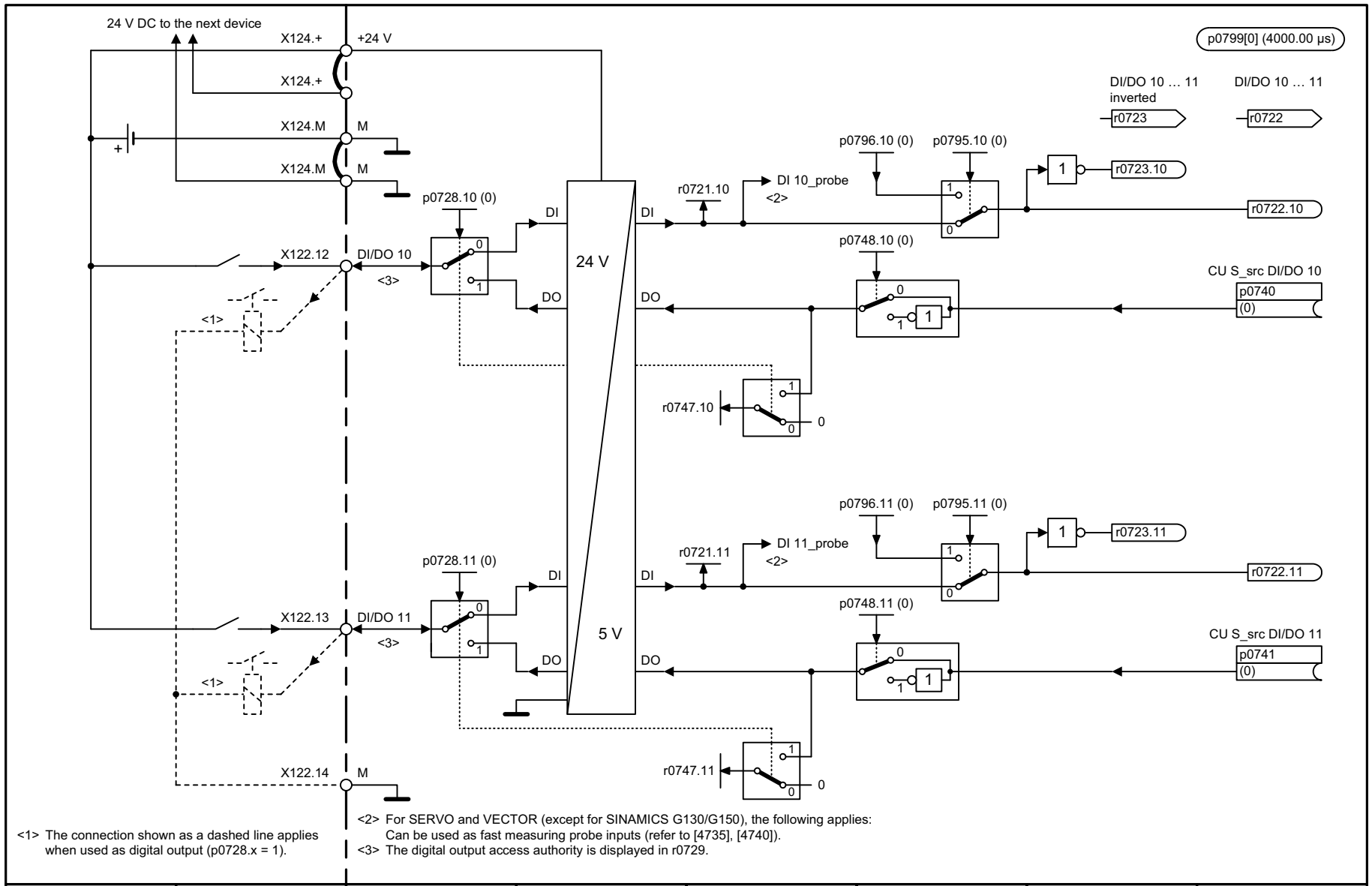

<1> The connection shown as a dashed line applies when used as digital output (p0728.x = 1).

<2> For SERVO and VECTOR (except for SINAMICS G130/G150), the following applies: Can be used as fast measuring probe inputs (refer to [4735], [4740]).

<3> The digital output access authority is displayed in r0729.

1	2	3	4	5	6	7	8
DO: CU_G, CU_GL, CU_GM, CU_MV, CU_S, CU_SL					fp_2131_51_eng.vsd	Function diagram	- 2131 -
CU320-2 input/output terminals - Digital inputs/outputs, bidirectional (DI/DO 10 ... DI/DO 11)					07.12.11 V04.05.00	SINAMICS	

Fig. 2-21 2131 – Digital inputs/outputs, bidirectional (DI/DO 10 ... DI/DO 11)

© Siemens AG 2012 All Rights Reserved

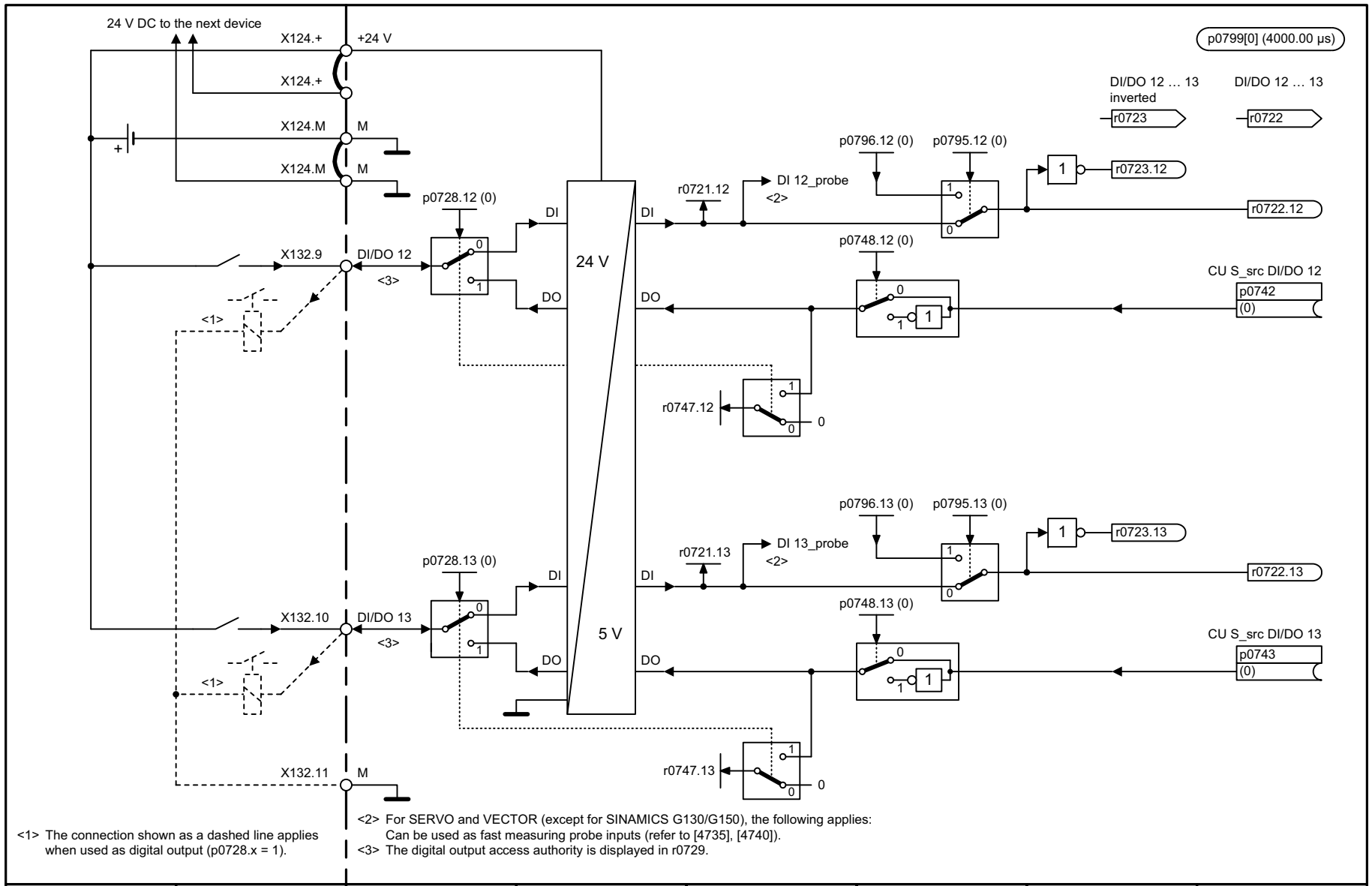

<1> The connection shown as a dashed line applies when used as digital output (p0728.x = 1).

<2> For SERVO and VECTOR (except for SINAMICS G130/G150), the following applies: Can be used as fast measuring probe inputs (refer to [4735], [4740]).

<3> The digital output access authority is displayed in r0729.

1	2	3	4	5	6	7	8
DO: CU_G, CU_GL, CU_GM, CU_MV, CU_S, CU_SL					fp_2132_51_eng.vsd	Function diagram	- 2132 -
CU320-2 input/output terminals - Digital inputs/outputs, bidirectional (DI/DO 12 ... DI/DO 13)					07.12.11 V04.05.00	SINAMICS	

Fig. 2-22 2132 – Digital inputs/outputs, bidirectional (DI/DO 12 ... DI/DO 13)

© Siemens AG 2012 All Rights Reserved

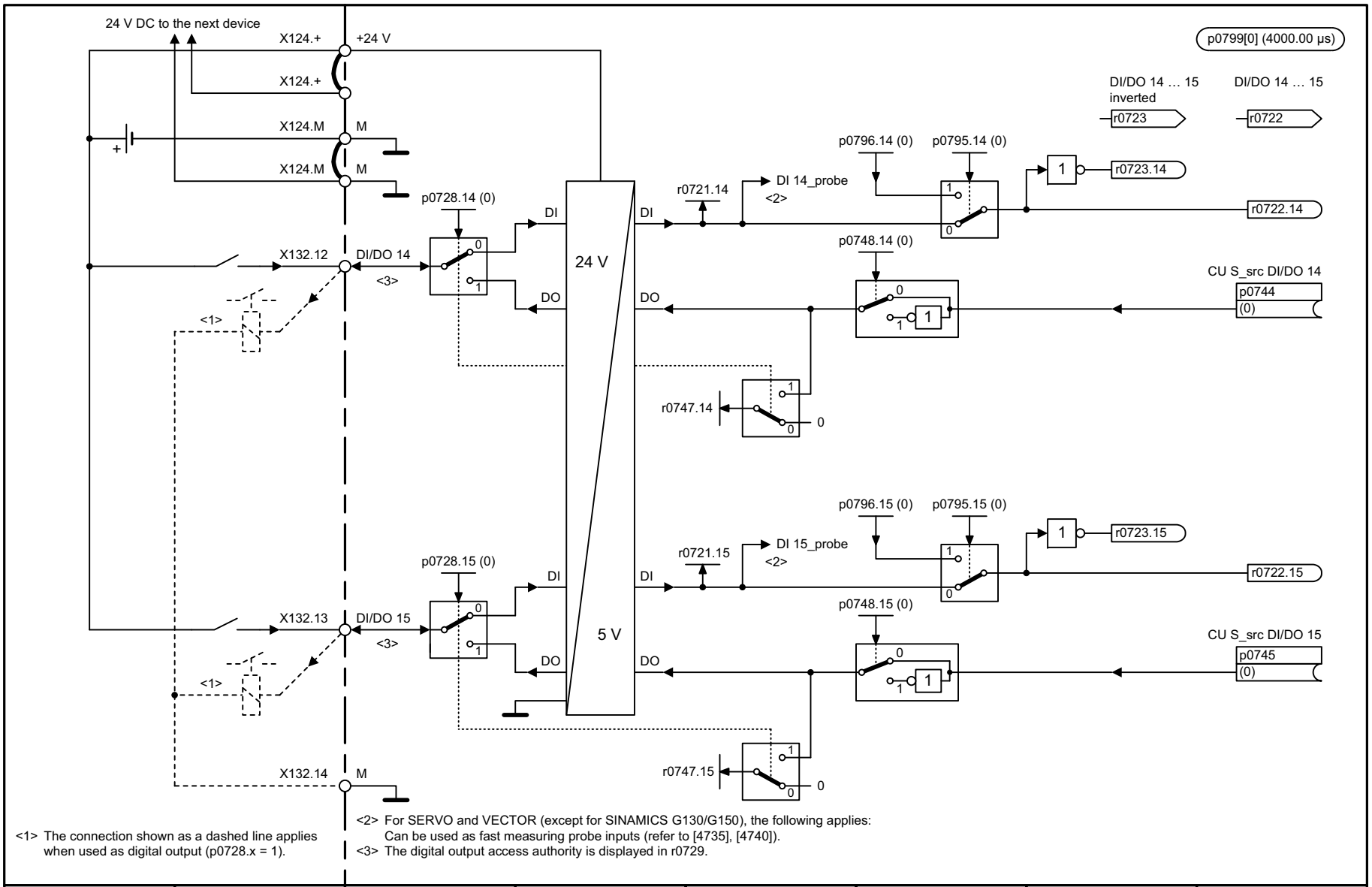

<1> The connection shown as a dashed line applies when used as digital output (p0728.x = 1).

<2> For SERVO and VECTOR (except for SINAMICS G130/G150), the following applies: Can be used as fast measuring probe inputs (refer to [4735], [4740]).

<3> The digital output access authority is displayed in r0729.

1	2	3	4	5	6	7	8
DO: CU_G, CU_GL, CU_GM, CU_MV, CU_S, CU_SL					fp_2133_51_eng.vsd	Function diagram	- 2133 -
CU320-2 input/output terminals - Digital inputs/outputs, bidirectional (DI/DO 14 ... DI/DO 15)					07.12.11 V04.05.00	SINAMICS	

Fig. 2-23 2133 – Digital inputs/outputs, bidirectional (DI/DO 14 ... DI/DO 15)

© Siemens AG 2012 All Rights Reserved

2.5 CU_LINK

Function diagrams

2211 – Data transfer 2-1007

© Siemens AG 2012 All Rights Reserved

Fig. 2-24 2211 – Data transfer

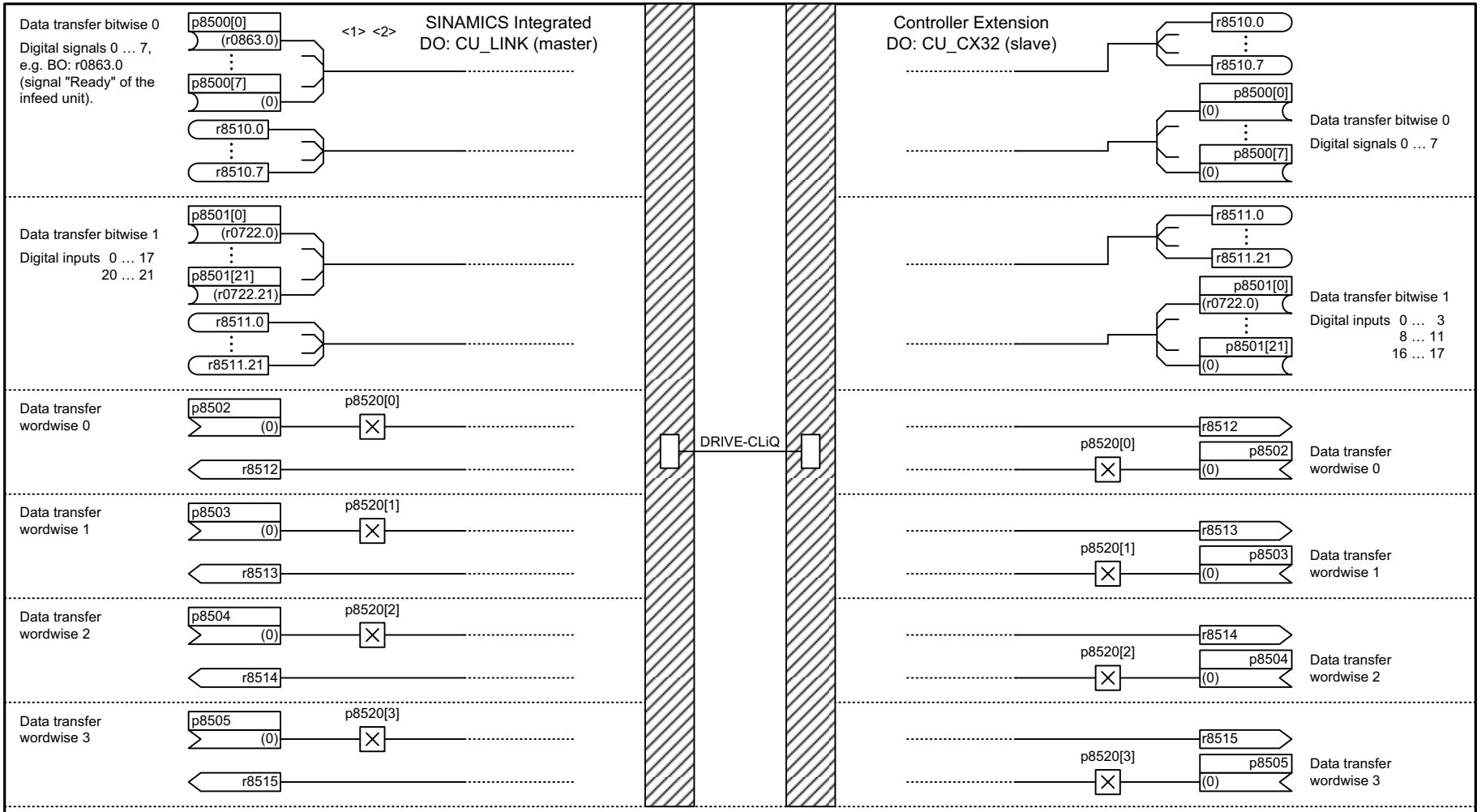

<1> The drive object CU_LINK only exists for automation systems with SINAMICS Integrated (e.g. SIMOTION D, SINUMERIK NCU) and the corresponding controller extension (e.g. CX32-2, NX10).
On the SINAMICS Integrated, each controller extension is represented by a drive object CU_LINK.

<2> p8800: CU_LINK address.
Address of the controller extension, represented by the drive object CU_LINK. The address correlates with the DRIVE-CLiQ socket of the control unit connected to the controller extension configured.
Value range: See p0918 (PROFIBUS address)
The parameter p8800 is only readable through non-cyclic parameter access via DPV1 services.

1	2	3	4	5	6	7	8
DO: CU_LINK, CU_CX32					fp_2211_51_eng.vsd	Function diagram	- 2211 -
CU_LINK - Data transfer					21.04.11 V04.05.00	SINAMICS	

© Siemens AG 2012 All Rights Reserved

2.6 PROFIdrive

Function diagrams

2410 – PROFIBUS (PB) / PROFINET (PN), addresses and diagnostics	2-1010
2415 – Standard telegrams and process data 1	2-1011
2416 – Standard telegrams and process data 2	2-1012
2419 – Manufacturer-specific telegrams and process data 1	2-1013
2420 – Manufacturer-specific telegrams and process data 2	2-1014
2421 – Manufacturer-specific telegrams and process data 3	2-1015
2422 – Manufacturer-specific telegrams and process data 4	2-1016
2423 – Manufacturer-specific/free telegrams and process data	2-1017
2425 – STW1_BM control word metal industry interconnection	2-1018
2426 – STW2_BM control word metal industry interconnection	2-1019
2427 – E_STW1_BM control word infeed metal industry interconnection	2-1020
2428 – ZSW1_BM status word metal industry interconnection	2-1021
2429 – ZSW2_BM status word metal industry interconnection	2-1022
2430 – E_ZSW1_BM control word infeed metal industry interconnection	2-1023
2439 – PZD receive signals, interconnection, profile-specific	2-1024
2440 – PZD receive signals, interconnection, manufacturer-specific	2-1025
2441 – STW1 control word interconnection (p2038 = 2)	2-1026
2442 – STW1 control word interconnection (p2038 = 0)	2-1027
2444 – STW2 control word interconnection (p2038 = 0)	2-1028
2447 – E_STW1 control word infeed interconnection	2-1029
2449 – PZD send signals, interconnection, profile-specific	2-1030
2450 – PZD send signals interconnection manufacturer-specific	2-1031
2451 – ZSW1 status word interconnection (p2038 = 2)	2-1032
2452 – ZSW1 status word interconnection (p2038 = 0)	2-1033
2454 – ZSW2 status word interconnection (p2038 = 0)	2-1034
2457 – E_ZSW1 status word infeed interconnection	2-1035
2468 – IF1 receive telegram, free interconnection via BICO (p0922 = 999)	2-1036

© Siemens AG 2012 All Rights Reserved

2470 – IF1 send telegram, free interconnection via BICO (p0922 = 999)	2-1037
2472 – IF1 status words, free interconnection	2-1038
2481 – IF1 receive telegram, free interconnection via BICO (p0922 = 999)	2-1039
2483 – IF1 send telegram, free interconnection via BICO (p0922 = 999)	2-1040
2485 – IF2 receive telegram, free interconnection via BICO	2-1041
2487 – IF2 send telegram, free interconnection	2-1042
2489 – IF2 status words, free interconnection	2-1043
2491 – IF2 receive telegram, free interconnection	2-1044
2493 – IF2 send telegram, free interconnection	2-1045
2495 – CU_STW1 control word 1, Control Unit interconnection	2-1046
2496 – CU_ZSW1 status word 1, Control Unit interconnection	2-1047
2497 – A_DIGITAL interconnection	2-1048
2498 – E_DIGITAL interconnection	2-1049
2499 – A_DIGITAL_1 interconnection	2-1050
2500 – E_DIGITAL_1 interconnection	2-1051

© Siemens AG 2012 All Rights Reserved

Fig. 2-25 2410 – PROFIBUS (PB) / PROFINET (PN), addresses and diagnostics

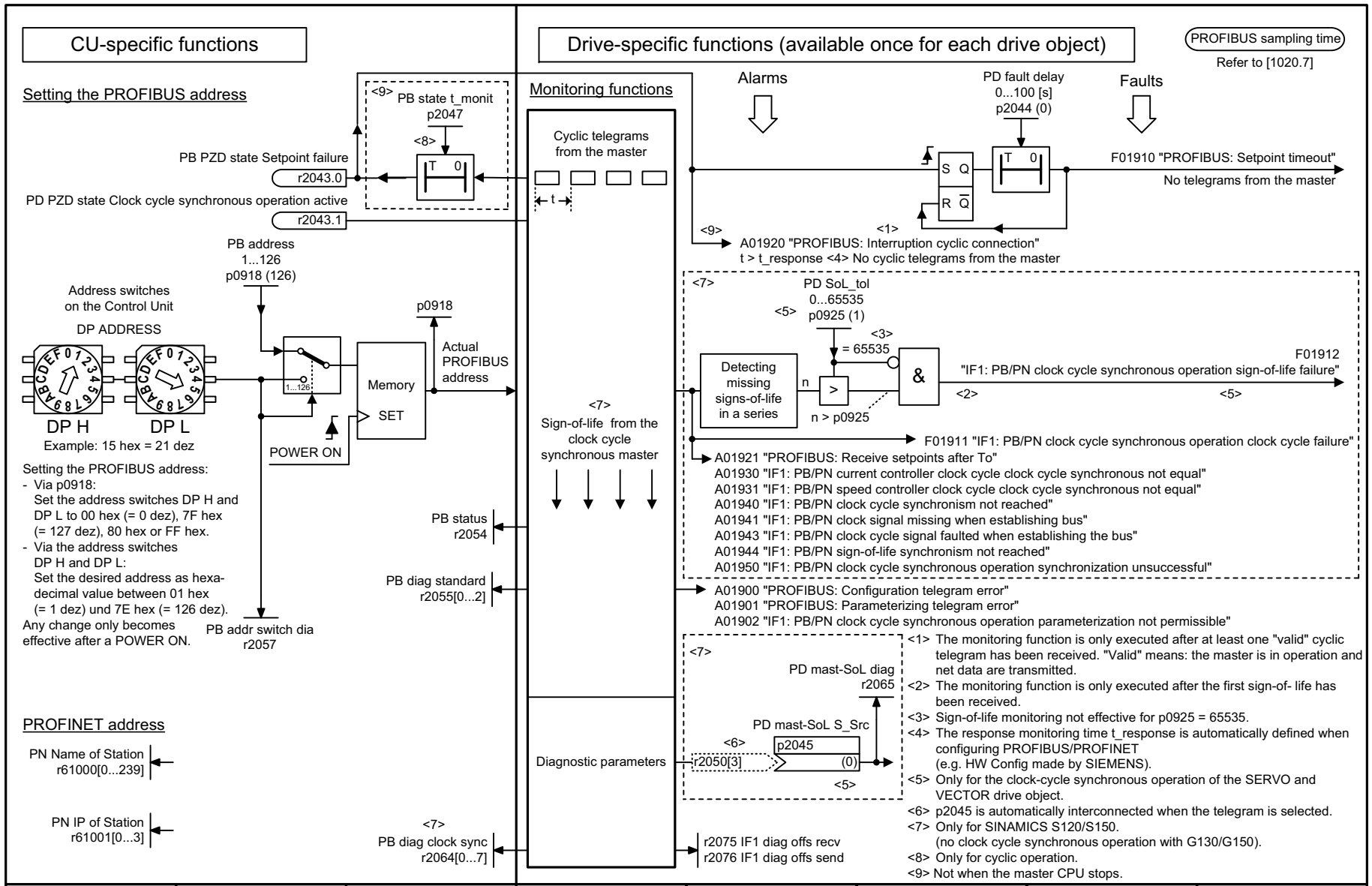

1	2	3	4	5	6	7	8
DO: All objects					fp_2410_54_eng.vsd	Function diagram	- 2410 -
PROFIdrive - PROFIBUS (PB) / PROFINET (PN), addresses and diagnostics					25.10.11 V04.05.00	S120/S150/G130/G150	

© Siemens AG 2012 All Rights Reserved

<1> <2> <3>

PD Telegram select
p0922 (999)

PROFIdrive sampling time
Refer to [1020.7]

Interconnection is made according to: Not suitable for sensorless vector control; [2440] [2450] automatically; <4>; <4>; <4>

Telegram	1		2		3		4		5		6		7		9	
Appl.-Class	1		1		1, 4		1, 4		4 DSC		4 DSC		3		3	
PZD1	STW1	ZSW1	STW1	ZSW1	STW1	ZSW1	STW1	ZSW1	STW1	ZSW1	STW1	ZSW1	STW1	ZSW1	STW1	ZSW1
PZD2	NSOLL_A	NIST_A	NSOLL_B	NIST_B	NSOLL_B	NIST_B	NSOLL_B	NIST_B	NSOLL_B	NIST_B	NSOLL_B	NIST_B	SATZANW	AKTSATZ	SATZANW	AKTSATZ
PZD3															STW2	ZSW2
PZD4			STW2	ZSW2	STW2	ZSW2	STW2	ZSW2	STW2	ZSW2	STW2	ZSW2			MDI_ TARPOS	XIST_A
PZD5					G1_STW	G1_ZSW	G1_STW	G1_ZSW	G1_STW	G1_ZSW	G1_STW	G1_ZSW				
PZD6						G1_XIST1	G2_STW	G1_XIST1	XERR	G1_XIST1	G2_STW	G1_XIST1			MDI_ VELOCITY	
PZD7											XERR					
PZD8						G1_XIST2		G1_XIST2	KPC	G1_XIST2		G1_XIST2			MDI_ACC	
PZD9											KPC				MDI_DEC	
PZD10								G2_ZSW				G2_ZSW			MDI_MOD	
PZD11								G2_XIST1				G2_XIST1				
PZD12																
PZD13								G2_XIST2				G2_XIST2				
PZD14																
PZD15																
PZD16																
PZD17																
PZD18																
PZD19																
PZD20																
PZD21																
PZD22																
PZD23																
PZD24																
PZD25																
PZD26																
PZD27																
PZD28																
PZD29																
PZD30																
PZD31																
PZD32																

Receive telegram from PROFIdrive

Send telegram to PROFIdrive

<1> Depending on the drive object, only specific telegrams can be used. Not suitable for sensorless vector control.
<2> If p0922 = 999 is changed to another value, the telegram is automatically assigned as specified in [2415] - [2424].
If p0922 ≠ 999 is changed to p0922 = 999, the "old" telegram assignment is maintained as specified in [2415] - [2424].
<3> The maximum number of PZD words depends on the drive object type.
<4> Only for SINAMICS S120/S150.

= Position encoder signal

1	2	3	4	5	6	7	8
DO: ENC, SERVO, VECTOR					fp_2415_54_eng.vsd	Function diagram	- 2415 -
PROFIdrive - Standard telegrams and process data 1					22.11.11 V04.05.00	S120/S150/G130/G150	

Fig. 2-26 2415 – Standard telegrams and process data 1

© Siemens AG 2012 All Rights Reserved

<1> <2> <4>
PD Telegram select
p0922 (999)

PROFIdrive sampling time
Refer to [1020.7]

Interconnection is made according to	[2440] [2450] automatically											
							<5>		<5>		<5>	
Telegram	20		30		31		81		82		83	
Appl.-Class	1		1		1		1		1		1	
PZD1	STW1	ZSW1	S_STW1	S_ZSW1	S_STW1	S_ZSW1	STW2_ENC	ZSW2_ENC	STW2_ENC	ZSW2_ENC	STW2_ENC	ZSW2_ENC
PZD2	NSOLL_A	NIST_A_GLATT	Profisafe trailer	Profisafe trailer	Profisafe trailer	Profisafe trailer	G1_STW	G1_ZSW	G1_STW	G1_ZSW	G1_STW	G1_ZSW
PZD3		IAIST_GLATT						G1_XIST1		G1_XIST1		G1_XIST1
PZD4		MIST_GLATT										
PZD5		PIST_GLATT						G1_XIST2		G1_XST2		G1_XIST2
PZD6		user <3>										
PZD7										NIST_A		NIST_B
PZD8												
PZD9												
PZD10												
PZD11												
PZD12												
PZD13												
PZD14												
PZD15												
PZD16												
PZD17												
PZD18												
PZD19												
PZD20												
PZD21												
PZD22												
PZD23												
PZD24												
PZD25												
PZD26												
PZD27												
PZD28												
PZD29												
PZD30												
PZD31												
PZD32												

<1> Depending on the drive object, only specific telegrams can be used. Not suitable for sensorless vector control.
<2> If p0922 = 999 is changed to another value, the telegram is automatically assigned as specified in [2415] - [2423].
If p0922 ≠ 999 is changed to p0922 = 999, the "old" telegram assignment is maintained as specified in [2415] - [2423].
<3> Freely interconnectable (pre-setting: MELD_NAMUR).
<4> The maximum number of PZD words depends on the drive object type.
<5> Only for ENCODER.

= Position encoder signal

1	2	3	4	5	6	7	8
DO: ENC, SERVO, VECTOR					fp_2416_54_eng.vsd	Function diagram	- 2416 -
PROFIdrive - Standard telegrams and process data 2					22.11.11 V04.05.00	S120/S150/G130/G150	

Fig. 2-27 2416 – Standard telegrams and process data 2

© Siemens AG 2012 All Rights Reserved

<1> <2> <4>
PD Telegr_select
p0922 (999)

PROFIdrive sampling time
Refer to [1020.7]

Interconnection is made according to	[2440] [2450] automatically <5>		<5>		<5>		<5>		<5>		<5>		<5>		
Telegram	102		103		105		106		110		111		116		
Appl.- Class	1, 4		1, 4		4 DSC		4 DSC		3		3		4 DSC		
PZD1	STW1	ZSW1	STW1	ZSW1	STW1	ZSW1	STW1	ZSW1	STW1	ZSW1	STW1	ZSW1	STW1	ZSW1	
PZD2	NSOLL_B	NIST_B	NSOLL_B	NIST_B	NSOLL_B	NIST_B	NSOLL_B	NIST_B	SATZANW	AKTSATZ	POS_STW1	POS_ZSW1	NSOLL_B	NIST_B	
PZD3									POS_STW	POS_ZSW	POS_STW2	POS_ZSW2			
PZD4	STW2	ZSW2	STW2	ZSW2	STW2	ZSW2	STW2	ZSW2	STW2	ZSW2	STW2	ZSW2	STW2	ZSW2	
PZD5	MOMRED	MELDW	MOMRED	MELDW	MOMRED	MELDW	MOMRED	MELDW	OVERRIDE	MELDW	OVERRIDE	MELDW	MOMRED	MELDW	
PZD6	G1_STW	G1_ZSW	G1_STW	G1_ZSW	G1_STW	G1_ZSW	G1_STW	G1_ZSW	MDI_TAR POS	XIST_A	MDI_TAR POS	XIST_A	G1_STW	G1_ZSW	
PZD7		G1_XIST1	G2_STW	G1_XIST1	XERR	G1_XIST1	G2_STW	G1_XIST1					G2_STW	G1_XIST1	
PZD8							XERR		MDI_VELO CITY		MDI_VELO CITY	NIST_B	XERR		
PZD9		G1_XIST2		G1_XIST2	KPC	G1_XIST2		G1_XIST2						G1_XIST2	
PZD10							KPC		MDI_ACC		MDI_ACC	FAULT_CODE	KPC		
PZD11				G2_ZSW				G2_ZSW	MDI_DEC		MDI_DEC	WARN_CODE		G2_ZSW	
PZD12				G2_XIST1				G2_XIST1	MDI_MODE		user <3>	user <3>		G2_XIST1	
PZD13															
PZD14				G2_XIST2				G2_XIST2						G2_XIST2	
PZD15															
PZD16														AIST_GLATT	
PZD17														MSOLL_GLATT	
PZD18														PIST_GLATT	
PZD19														ITIST_GLATT	
PZD20															
PZD21															
PZD22															
PZD23															
PZD24															
PZD25															
PZD26															
PZD27															
PZD28															
PZD29															
PZD30															
PZD31															
PZD32															

<1> Depending on the drive object, only specific telegrams can be used.
<2> If p0922 = 999 is changed to another value, the telegram is automatically assigned as specified in [2415] - [2423].
If p0922 ≠ 999 is changed to p0922 = 999, the "old" telegram assignment is maintained as specified in [2415] - [2423]!
<3> Can be freely connected.
<4> The maximum number of PZD words depends on the drive object type.
<5> Only for SINAMICS S120/S150.

= Position encoder signal

1	2	3	4	5	6	7	8
DO: SERVO, VECTOR					fp_2419_54_eng.vsd	Function diagram	- 2419 -
PROFIdrive – Manufacturer-specific telegrams and process data 1					22.11.11 V04.05.00	S120/S150/G130/G150	

Fig. 2-28 2419 – Manufacturer-specific telegrams and process data 1

© Siemens AG 2012 All Rights Reserved

<1> <2> <4>
PD Telegr_select
p0922 (999)

PROFIdrive sampling time
Refer to [1020.7]

Interconnection is made according to	[2440] [2450] automatically												
	<3>		<3>		<3>				<7>		<6>		
Telegram	118		125		126		136		138		139		
Appl.- Class	4 DSC		4 DSC		4 DSC		4 DSC		4 DSC		4 DSC		
PZD1	STW1	ZSW1	STW1	ZSW1	STW1	ZSW1	STW1	ZSW1	STW1	ZSW1	STW1	ZSW1	
PZD2	NSOLL_B	NIST_B	NSOLL_B	NIST_B	NSOLL_B	NIST_B	NSOLL_B	NIST_B	NSOLL_B	NIST_B	NSOLL_B	NIST_B	
PZD3													
PZD4	STW2	ZSW2	STW2	ZSW2	STW2	ZSW2	STW2	ZSW2	STW2	ZSW2	STW2	ZSW2	
PZD5	MOMRED	MELDW	MOMRED	MELDW	MOMRED	MELDW	MOMRED	MELDW	MOMRED	MELDW	MOMRED	MELDW	
PZD6	G2_STW	G2_ZSW	G1_STW	G1_ZSW	G1_STW	G1_ZSW	G2_STW	G1_ZSW	G2_STW	G2_ZSW	G1_STW	G1_ZSW	
PZD7	G3_STW	G2_XIST1	XERR	G1_XIST1	G2_STW	G1_XIST1	G3_STW	G1_XIST1	G3_STW	G2_XIST1	res	G1_XIST1	
PZD8	XERR				XERR		XERR		XERR		XERR		
PZD9		G2_XIST2	KPC	G1_XIST2		G1_XIST2		G1_XIST2		G2_XIST2		G1_XIST2	
PZD10	KPC				KPC		KPC		KPC		KPC		
PZD11		G3_ZSW	M_VST			G2_ZSW		G2_ZSW		G3_ZSW		SP_ZSW	
PZD12		G3_XIST1	DSC_STW <5>		M_VST	G2_XIST1	M_VST	G3_XIST1	M_VST	G2_XIST1	M_VST	SP_XIST_A	
PZD13			res		DSC_STW <5>		DSC_STW <5>		DSC_STW <5>		DSC_STW <5>	SP_XIST_D	
PZD14		G3_XIST2	T_SYMM <5>		res	G2_XIST2	res	G3_XIST2	res	G2_XIST2	res	SP_KONFIG	
PZD15					T_SYMM <5>		T_SYMM <5>		T_SYMM <5>		T_SYMM <5>	res	
PZD16		AIST_GLATT						AIST_GLATT		AIST_GLATT		AIST_GLATT	
PZD17		MSOLL_GLATT						MSOLL_GLATT		MSOLL_GLATT		MSOLL_GLATT	
PZD18		PIST_GLATT						PIST_GLATT		PIST_GLATT		PIST_GLATT	
PZD19		ITIST_GLATT						ITIST_GLATT		ITIST_GLATT		ITIST_GLATT	
PZD20													
PZD21													
PZD22													
PZD23													
PZD24													
PZD25													
PZD26													
PZD27													
PZD28													
PZD29													
PZD30													
PZD31													
PZD32													

<1> Depending on the drive object, only specific telegrams can be used.
<2> If p0922 = 999 is changed to another value, the telegram is automatically assigned as specified in [2415] - [2423].
If p0922 ≠ 999 is changed to p0922 = 999, the "old" telegram assignment is maintained as specified in [2415] - [2423].
<3> Only for SINAMICS S120/S150.
<4> The maximum number of PZD words depends on the drive object type.
<5> Only if the “DSC with Spline“ function module is active (r0108.6 = 1).
<6> Only if the “Spindle“ function module is active (r0108.11 = 1).
<7> Only for SINAMICS S120.

= Position encoder signal

1	2	3	4	5	6	7	8
DO: SERVO, VECTOR					fp_2420_54_eng.vsd	Function diagram	- 2420 -
PROFIdrive – Manufacturer-specific telegrams and process data 2					22.11.11 V04.05.00	S120/S150/G130/G150	

Fig. 2-29 2420 – Manufacturer-specific telegrams and process data 2

© Siemens AG 2012 All Rights Reserved

<1> <2> <4>
PD Telegram select
p0922 (999)

PROFIdrive sampling time
Refer to [1020.7]

Interconnection is made according to	[2440] [2450] automatically <8>								
Telegram	220		352		370		371		
Appl.- Class	1		1		-		-		
PZD1	STW1_BM	ZSW1_BM	STW1	ZSW1	E_STW1	E_ZSW1	E_STW1_BM	E_ZSW1_BM	
PZD2	NSOLL_B	NIST_A /NIST_A_GLATT user <3> <9>	NSOLL_A	NIST_A_GLATT			user <3>	IAIST	
PZD3		IAIST/IAIST_GLATT user <3> <9>	<5>	IAIST_GLATT			user <3>	WARN_CODE	
PZD4	STW2_BM	MIST/MIST_GLATT user <3> <9>	<5>	MIST_GLATT			user <3>	FAULT_CODE	
PZD5	M_ADD <7><10>	WARN_CODE	<5>	WARN_CODE			user <3>	user <3>	
PZD6	M_LIM <6> <7>	FAULT_CODE	<5>	FAULT_CODE				user <3>	
PZD7	user <3>	ZSW2_BM						user <3>	
PZD8	user <3>	r1482 user <3>						user <3>	
PZD9	user <3>	user <3>							
PZD10	user <3>	user <3>							
PZD11									
PZD12									
PZD13									
PZD14									
PZD15									
PZD16									
PZD17									
PZD18									
PZD19									
PZD20									
PZD21									
PZD22									
PZD23									
PZD24									
PZD25									
PZD26									
PZD27									
PZD28									
PZD29									
PZD30									
PZD31									
PZD32									

<1> Depending on the drive object, only specific telegrams can be used.
<2> If p0922 = 999 is changed to another value, the telegram is automatically assigned as specified in [2415] - [2423].
If p0922 ≠ 999 is changed to p0922 = 999, the "old" telegram assignment is maintained as specified in [2415] - [2423]!
<3> Freely interconn.
<4> The maximum number of PZD words depends on the drive object type.
<5> In order to comply with the PROFIdrive profile, PZD1 must be used as control word 1 (STW1) or status word 1 (ZSW1).
p2037 = 2 should be set if STW1 is not transferred with PZD1 as specified in the PROFIdrive profile.

<6> Not for U/f control.
<7> Preassignment, not disabled.
<9> Only if the "Spindle" function module is active (r0108.11 = 1).
<8> Only for S120/S150.
<9> Values smoothed at Vector, Values unsmooted at Servo.
<10> Not for SERVO.

1	2	3	4	5	6	7	8
DO: A_INF, B_INF, CU_G, CU_S, S_INF, SERVO, VECTOR					fp_2421_54_eng.vsd	Function diagram	- 2421 -
PROFIdrive - Manufacturer-specific telegrams and process data 3					22.11.11 V04.05.00	S120/S150/G130/G150	

Fig. 2-30 2421 – Manufacturer-specific telegrams and process data 3

© Siemens AG 2012 All Rights Reserved

<1> <2> <3>
PD Telegram select
p0922 (999)

PROFIdrive sampling time
Refer to [1020.7]

Interconnection is made according to	[2440] [2450] automatically <4>													
Telegram	390		391		392		393		394		395		396	
Appl.- Class	-		-		-		-		-		-		-	
PZD1	CU_STW1	CU_ZSW1	CU_STW1	CU_ZSW1	CU_STW1	CU_ZSW1	CU_STW1	CU_ZSW1	CU_STW1	CU_ZSW1	CU_STW1	CU_ZSW1	CU_STW1	CU_ZSW1
PZD2	A_DIGITAL	E_DIGITAL	A_DIGITAL	E_DIGITAL	A_DIGITAL	E_DIGITAL	A_DIGITAL	E_DIGITAL	A_DIGITAL	E_DIGITAL	A_DIGITAL	E_DIGITAL	A_DIGITAL	E_DIGITAL
PZD3			MT_STW	MT_ZSW	MT_STW	MT_ZSW	A_DIGITAL_1	E_DIGITAL_1	A_DIGITAL_1	E_DIGITAL_1	A_DIGITAL_1	E_DIGITAL_1	A_DIGITAL_1	E_DIGITAL_1
PZD4				MT1_ZS_F		MT1_ZS_F	MT_STW	MT_ZSW			MT_STW	MT_ZSW	MT_STW	MT_ZSW
PZD5				MT1_ZS_S		MT1_ZS_S		MT1_ZS_F				MT_DIAG	NOCKEN1_ZS_F	MT1_ZS_F
PZD6				MT2_ZS_F		MT2_ZS_F		MT1_ZS_S				MT_ZS_1	NOCKEN1_ZS_S	MT1_ZS_S
PZD7				MT2_ZS_S		MT2_ZS_S		MT2_ZS_F				MT_ZS_2	NOCKEN2_ZS_F	MT2_ZS_F
PZD8						MT3_ZS_F		MT2_ZS_S				MT_ZS_3	NOCKEN2_ZS_S	MT2_ZS_S
PZD9						MT3_ZS_S		MT3_ZS_F				MT_ZS_4	NOCKEN3_ZS_F	MT3_ZS_F
PZD10						MT4_ZS_F		MT3_ZS_S				MT_ZSB1	NOCKEN3_ZS_S	MT3_ZS_S
PZD11						MT4_ZS_S		MT4_ZS_F				MT_ZS_5	NOCKEN4_ZS_F	MT4_ZS_F
PZD12						MT5_ZS_F		MT4_ZS_S				MT_ZS_6	NOCKEN4_ZS_S	MT4_ZS_S
PZD13						MT5_ZS_S		MT5_ZS_F				MT_ZS_7	NOCKEN5_ZS_F	MT5_ZS_F
PZD14						MT6_ZS_F		MT5_ZS_S				MT_ZS_8	NOCKEN5_ZS_S	MT5_ZS_S
PZD15						MT6_ZS_S		MT6_ZS_F				MT_ZSB2	NOCKEN6_ZS_F	MT6_ZS_F
PZD16								MT6_ZS_S				MT_ZS_9	NOCKEN6_ZS_S	MT6_ZS_S
PZD17								MT7_ZS_F				MT_ZS_10	NOCKEN7_ZS_F	MT7_ZS_F
PZD18								MT7_ZS_S				MT_ZS_11	NOCKEN7_ZS_S	MT7_ZS_S
PZD19								MT8_ZS_F				MT_ZS_12	NOCKEN8_ZS_F	MT8_ZS_F
PZD20								MT8_ZS_S				MT_ZSB3	NOCKEN8_ZS_S	MT8_ZS_S
PZD21								E_ANALOG				MT_ZS_13		E_ANALOG
PZD22												MT_ZS_14		
PZD23												MT_ZS_15		
PZD24												MT_ZS_16		
PZD25												MT_ZSB4		
PZD26														
PZD27														
PZD28														
PZD29														
PZD30														
PZD31														
PZD32														

<1> Depending on the drive object, only specific telegrams can be used.
<2> If p0922 = 999 is changed to another value, the telegram is automatically assigned as specified in [2415] - [2423].
If p0922 ≠ 999 is changed to p0922 = 999, the "old" telegram assignment is maintained as specified in [2415] - [2423].
<3> The maximum number of PZD words depends on the drive object type.
<4> Only for CU_I_D410.
<5> Connected Only for CU_S_AC or CU_I_D410.

1	2	3	4	5	6	7	8
DO: A_INF, B_INF, CU_G, CU_S, S_INF, SERVO, VECTOR					fp_2422_54_eng.vsd	Function diagram	- 2422 -
PROFIdrive - Manufacturer-specific telegrams and process data 4					01.12.11 V04.05.00	S120/S150/G130/G150	

Fig. 2-31 2422 – Manufacturer-specific telegrams and process data 4

© Siemens AG 2012 All Rights Reserved

Fig. 2-32 2423 – Manufacturer-specific/free telegrams and process data

<1> <2> <4>
PD Telegram select
p0922 (999)

PROFIdrive sampling time
Refer to [1020.7]

Interconnection is made according to	[2440] [2450] automatically					[2481] [2483]	
Telegram	901		902			999	
Appl.- Class	-		-			<3> - <3>	
PZD1	S_STW2	S_ZSW2	S_STW2	S_ZTW2		STW1	ZSW1
PZD2						Receive telegram length freely selectable via central PROFIdrive configuration in the master <4>	Transmit telegram length freely selectable via central PROFIdrive configuration in the master <4>
PZD3	S_SLS_LIMIT_A	S_SLS_LIMIT_ACTIVE	S_SLS_LIMIT_A	S_SLS_LIMIT_A_ACTIVE			
PZD4		S_CYCLE_COUNT		S_CYCLE_COUNT			
PZD5		S_XIST16		S_XIST32			
PZD6							
PZD7							
PZD8							
PZD9							
PZD10							
PZD11							
PZD12							
PZD13							
PZD14							
PZD15							
PZD16							
PZD17							
PZD18							
PZD19							
PZD20							
PZD21							
PZD22							
PZD23							
PZD24							
PZD25							
PZD26							
PZD27							
PZD28							
PZD29							
PZD30							
PZD31							
PZD32							

<1> Depending on the drive object, only specific telegrams can be used.
<2> If p0922 = 999 is changed to another value, the telegram is automatically assigned as specified in [2415] - [2423].
If p0922 ≠ 999 is changed to p0922 = 999, the "old" telegram assignment is maintained as specified in [2415] - [2423].
<3> In order to comply with the PROFIdrive profile, PZD1 must be used as control word 1 (STW1) or status word 1 (ZSW1).
p2037 = 2 should be set if STW1 is not transferred with PZD1 as specified in the PROFIdrive profile.
<4> The maximum number of PZD words depends on the drive object type.

© Siemens AG 2012 All Rights Reserved

Signal targets for STW1_BM

<1>

PROFIdrive sampling time
Refer to [1020.7]

Signal	Meaning	Interconnection parameters	[Function diagram] internal control word	[Function diagram] signal target	Inverted
STW1.0	**0 = OFF (OFF1)** ↑ = ON	p0840[0] = r2090.0	[2501.3]	[2610]	-
STW1.1	**0 = OFF2** (immediate pulse suppression and switch on inhibit) 1 = No OFF2 (enable is possible)	p0844[0] = r2090.1	[2501.3]	[2610]	-
STW1.2	0 = OFF3 (braking along the OFF3 ramp (p1135), then pulse suppression and switch on inhibit) **1 = No OFF3** (enable is possible)	p0848[0] = r2090.2	[2501.3]	[2610]	-
STW1.3	0 = Inhibit operation **1 = Enable operation**	p2816[0] = r2090.3	[2501.3]	[2634.3]	-
STW1.4	0 = Inhibit ramp-function generator **1 = Operating condition**	p1140[0] = r2090.4	[2501.3]	[3060] [3070] [3080]	-
STW1.5	0 = Stop the ramp-function generator **1 = Enable the ramp-function generator**	p1141[0] = r2090.5	[2501.3]	[3060] [3070]	-
STW1.6	0 = Inhibit setpoint = 0 **1 = Enable setpoint**	p1142[0] = r2090.6	[2501.3]	[3060] [3070] [3080]	-
STW1.7	**↑ = Acknowledge faults**	p2103[0] = r2090.7	[2546.1]	[8060]	-
STW1.8	**Reserved**	-	-	-	-
STW1.9	**Reserved**	-	-	-	-
STW1.10	**1 = Control via PLC** <2>	p0854[0] = r2090.10	[2501.3]	[2501]	-
STW1.11	**Reserved**	-	-	-	-
STW1.12	**Reserved** <3>	<3>	-	-	-
STW1.13	**Reserved** <3>	<3>	-	-	-
STW1.14	**Reserved** <3>	<3>	-	-	-
STW1.15	**Reserved** <3>	<3>	-	-	-

<1> Used in telegram 220.
<2> STW1.10 must be set to ensure that the drive object accepts the process data (PZD).
<3> Interconnection is not disabled.

© Siemens AG 2012 All Rights Reserved

PROFIdrive sampling time
Refer to [1020.7]

Signal targets for STW2_BM <1>

Signal	Meaning	Interconnection parameters	[Function diagram] internal control word	[Function diagram] signal target	Inverted
STW2.0	**Command data set selection CDS, bit 0**	p0810 = r2093.0	-	[8560]	-
STW2.1	**Command data set selection CDS, bit 1** <3>	p0811 = r2093.1	-	[8560]	-
STW2.2	**Drive data set selection DDS, bit 0**	p0820[0] = r2093.2 <2>	-	[8565]	-
STW2.3	**Drive data set selection DDS, bit 1**	p0821[0] = r2093.3 <2>	-	[8565]	-
STW2.4	**Drive data set selection DDS, bit 2**	p0822[0] = r2093.4 <2>	-	[8565]	-
STW2.5	**1 = Bypass ramp-function generator** <4>	p1122[0] = r2093.5	-	-	-
STW2.6	**Reserved**	-	-	-	-
STW2.7	**1 = Speed controller set integrator value**	p1477[0] = r2093.7	-	-	-
STW2.8	**1 = Droop enabled** <3>	p1492[0] = r2093.8	-	[6030]	-
STW2.9	**1 = Speed controller enabled**	p0856[0] = r2093.9 <2>	-	-	-
STW2.10	**Reserved** <2>	<2>	-	-	-
STW2.11	**1 = Torque controlled operation** 0 = Speed controlled operation	p1501[0] = r2093.11	-	-	-
STW2.12	**Reserved** <2>	<2>	-	-	-
STW2.13	**Reserved** <2>	<2>	-	-	-
STW2.14	**Reserved** <2>	<2>	-	-	-
STW2.15	**Controller slave sign-of-life Toggle bit**	p2081[15] = r2093.15	-	-	-

<1> Used in telegram 220.
<2> Interconnection is not disabled.
<3> Only for Vector.
<4> Only for "extended setpoint channel".

Fig. 2-34 2426 – STW2_BM control word metal industry interconnection

© Siemens AG 2012 All Rights Reserved

PROFIdrive sampling time
Refer to [1020.7]

Signal targets for E_STW1_BM

<1> <7>

Signal	Meaning	Interconnection parameters	[Function diagram] internal control word			[Function diagram] signal target			Inverted
			A_INF	B_INF <7>	S_INF <5>	A_INF	B_INF <7>	S_INF <5>	
STW1.0	↑ **= ON** (close pre-charging/line contactor, pulses can be enabled) 0 = OFF1 (reduce Vdc along a ramp, suppress pulse and open pre-charging/line contactor)	p0840[0] = r2090.0	[8920.3]	[8720.3]	[8820.3]	[8932]	[8732]	[8832]	-
STW1.1	**1 = No OFF2 (enable is possible)** 0 = OFF2 (immediate pulse suppression and power-on inhibit)	p0844[0] = r2090.1	[8920.3]	[8720.3]	[8820.3]	[8932]	[8732]	[8832]	-
STW1.2	**Reserved**	-	-	-	-	-	-	-	-
STW1.3	**1 = Enable operation (pulses can be enabled)** <3> 0 = Inhibit operation (suppress pulses)	p0852[0] = r2090.3	[8920.3]	-	[8820.3]	[8932]	-	[8832]	-
STW1.4	**Reserved**	-	-	-	-	-	-	-	-
STW1.5	**1 = Infeed, inhibit motoring** <4>	p3532= r2090.5	[8920.3]	-	-	[8920]	-	-	-
STW1.6	**1 = Infeed, inhibit regenerative operation** <3>	p3533= r2090.6	[8920.3]	-	[8820.3]	[8920]	-	[8820]	-
STW1.7	↑ **= Acknowledge faults**	p2103[0] = r2090.7	[2546.3]			[8060]			-
STW1.8	**Reserved** <6>	<6>	-	-	-	-	-	-	-
STW1.9	**Reserved** <6>	<6>	-	-	-	-	-	-	-
STW1.10	**1 = Control via PLC** <2>	p0854[0] = r2090.10	[8920.3]	[8720.3]	[8820.3]	[8920]	[8720]	[8820]	-
STW1.11	**Reserved** <6>	<6>	-	-	-	-	-	-	-
STW1.12	**Reserved** <6>	<6>	-	-	-	-	-	-	-
STW1.13	**Reserved** <6>	<6>	-	-	-	-	-	-	-
STW1.14	**Reserved** <6>	<6>	-	-	-	-	-	-	-
STW1.15	**Controller-sign-of-life Toggle Bit**	p2080[15] = r2090.15	-	-	-	-	-	-	-

<1> Used in telegram 371.
<2> STW1.10 must be set to ensure that the drive object accepts the process data (PZD).
<3> Only for A_INF, S_INF
<4> Only for A_INF
<5> B_INF and S_INF only for S120.
<6> Interconnection is not disabled.
<7> Only for S120 and G150.
<8> Not for G130.

© Siemens AG 2012 All Rights Reserved

PROFIdrive Abtastzeit

Refer to [1020.7]

Signal sources for ZSW1_BM <1>

Signal	Meaning	Interconnection parameters	[Function diagram] Internal status word	[Function diagram] signal source	Inverted <2>
ZSW1.0	**1 = Ready for switching on**	p2080[0] = r0899.0	[2503.7]	[2610]	-
ZSW1.1	**1 = Ready for operation**	p2080[1] = r0899.1	[2503.7]	[2610]	-
ZSW1.2	**1 = Operation enabled**	p2080[2] = r2811.0	[2503.7]	[2610]	-
ZSW1.3	**1 = Fault present**	p2080[3] = r2139.3	[2548.7]	[8060]	-
ZSW1.4	**1 = No coast down active (OFF2 inactive)**	p2080[4] = r0899.4	[2503.7]	[2610]	-
ZSW1.5	**1 = No fast stop active (OFF3 inactive)**	p2080[5] = r0899.5	[2503.7]	[2610]	-
ZSW1.6	**1 = Switching on inhibited active**	p2080[6] = r0899.6	[2503.7]	[2610]	-
ZSW1.7	**1 = Alarm present**	p2080[7] = r2139.7	[2548.7]	[8065]	-
ZSW1.8	**1 = Speed setpoint - actual value deviation within tolerance t_off**	p2080[8] = r2197.7	[2534.7]	[8010]	-
ZSW1.9	**1 = Control requested** <3>	p2080[9] = r0899.9	[2503.7]	[2503]	-
ZSW1.10	**1 = f or n comparison value reached/exceeded**	p2080[10] = r2199.1	[2536.7]	[8010]	-
ZSW1.11	**1 = I, M, or P limit not reached** <4>	p2080[11] = r1407.7	[2522.7]	[5610] [6060] <5>	✔
ZSW1.12	**1 = Open the holding brake**	p2080[12] = r0899.12	[2503.7]	[2701]	-
ZSW1.13	**Reserved** <6>	<6>	-	-	-
ZSW1.14	**Reserved** <6>	<6>	-	-	-
ZSW1.15	**Reserved** <6>	<6>	-	-	-

<1> Used in telegram 220.
<2> The ZSW1 is generated using the binector-connector converter (BI: p2080[0...15], inversion: p2088[0].0...p2088[0].15)
<3> The drive object is ready to accept data.
<4> Not for VECTOR U/f.
<5> Only for SINAMICS S120.
<6> Interconnection is not disabled.

1	2	3	4	5	6	7	8
DO: SERVO, VECTOR					fp_2428_54_eng.vsd	Function diagram	- 2428 -
PROFIdrive - ZSW1_BM status word metal industry interconnection					06.12.10 V04.05.00	S120/S150/G130/G150	

Fig. 2-36 2428 – ZSW1_BM status word metal industry interconnection

© Siemens AG 2012 All Rights Reserved

PROFIdrive sampling time
Refer to [1020.7]

Signal sources for ZSW2_BM <1>

Signal	Meaning	Interconnection parameters	[Function diagram] internal status word	[Function diagram] signal source	Inverted
ZSW2.0	**Reserved** <3>	<3>	-	-	-
ZSW2.1	**Reserved** <3>	<3>	-	-	-
ZSW2.2	**Reserved** <3>	<3>	-	-	-
ZSW2.3	**Reserved** <3>	<3>	-	-	-
ZSW2.4	**Reserved** <3>	<3>	-	-	-
ZSW2.5	**1 = Alarm class bit 0**	p2081[5] = r2139.11	-	[2548]	-
ZSW2.6	**1 = Alarm class bit 1**	p2081[6] = r2139.12	-	[2548]	-
ZSW2.7	**Reserved**	-	-	-	-
ZSW2.8	**Reserved**	-	-	-	-
ZSW2.9	**1 = Speed setpoint limited** <2>	p2081[9] = r1407.11	-	-	-
ZSW2.10	**1 = Upper torque limit** <2>	p2081[10] = r1407.8	-	-	-
ZSW2.11	**1 = Lower torque limit** <2>	p2081[11] = r1407.9	-	-	-
ZSW2.12	**1 = Encoderless operation due to fault**	p2081[12] = r1407.13	-	-	-
ZSW2.13	**1 = SS1 delay time active in the drive**	p2081[13] = r9773.2	-	-	-
ZSW2.14	**1 = STO active in drive**	p2081[14] = r9773.1	-	-	-
ZSW2.15	**Controller slave sign-of-life Toggle bit**	p2081[15] = r2093.15	-	-	-

<1> Used in telegram 220.
<2> Not for VECTOR U/f.
<3> Interconnection is not disabled.

Fig. 2-37 2429 – ZSW2_BM status word metal industry interconnection

© Siemens AG 2012 All Rights Reserved
SINAMICS G130/G150 List Manual (LH2), 01/2012, A5E03263479A

PROFIdrive sampling time
Refer to [1020.7]

Signal sources for E_ZSW1_BM

<1> <6>

Signal	Meaning	Interconnection parameters	[Function diagram] signal source			[Function diagram] internal status word			Inverted
			A_INF	B_INF <5>	S_INF <3>	A_INF	B_INF <5>	S_INF <3>	
ZSW1.0	**1 = Ready for switching on**	p2080[0] = r0899.0	[8932]	[8732]	[8832]	[8926.7]	[8726.7]	[8826.7]	-
ZSW1.1	**1 = Ready for operation**	p2080[1] = r0899.1	[8932]	[8732]	[8832]	[8926.7]	[8726.7]	[8826.7]	-
ZSW1.2	**1 = Operation enabled**	p2080[2] = r0899.2	[8932]	[8732]	[8832]	[8926.7]	[8726.7]	[8826.7]	-
ZSW1.3	**1 = Fault present**	p2080[3] = r2139.3	[8060]			[2548.7]			-
ZSW1.4	**1 = No OFF2 effective**	p2080[4] = r0899.4	[8932]	[8732]	[8832]	[8926.7]	[8726.7]	[8826.7]	-
ZSW1.5	**Reserved**	-	-	-	-	-	-	-	-
ZSW1.6	**1 = Switching on inhibited**	p2080[6] = r0899.6	[8932]	[8732]	[8832]	[8926.7]	[8726.7]	[8826.7]	-
ZSW1.7	**1 = Alarm present**	p2080[7] = r2139.7	[8065]			[2548.7]			-
ZSW1.8	**Reserved** <4>	<4>	-	-	-	-	-	-	-
ZSW1.9	**1 = PLC requests control** <2>	p2080[9] = r0899.9	[8926]	[8726]	[8826]	[8926.7]	[8726.7]	[8826.7]	-
ZSW1.10	**Reserved** <4>	<4>	-	-	-	-	-	-	-
ZSW1.11	**1 = Pre-charging completed**	p2080[11] = r0899.11	[8950]	[8750]	[8850]	[8926.7]	[8726.7]	[8826.7]	-
ZSW1.12	**1 = Line contactor closed**	p2080[12] = r0899.12	[8934]	[8734]	[8834]	[8926.7]	[8726.7]	[8826.7]	-
ZSW1.13	**Reserved** <4>	<4>	-	-	-	-	-	-	-
ZSW1.14	**Reserved** <4>	<4>	-	-	-	-	-	-	-
ZSW1.15	**Controller sign-of-life Toggle bit**	r2080[15] = r2090.15	-	-	-	-	-	-	-

<1> Used in telegram 371.
<2> The drive object is ready to accept data.
<3> Only for S120.
<4> Interconnection is not disabled.
<5> Only for S120 and G150.
<6> Not for G130.

1	2	3	4	5	6	7	8
DO: A_INF, B_INF, S_INF					fp_2430_54_eng.vsd	Function diagram	- 2430 -
PROFIdrive - E_ZSW1_BM status word infeed metal industry interconnection					22.10.10 V04.05.00	S120/S150/G130/G150	

Fig. 2-38 2430 – E_ZSW1_BM control word infeed metal industry interconnection

© Siemens AG 2012 All Rights Reserved

PROFIdrive sampling time
Refer to [1020.7]

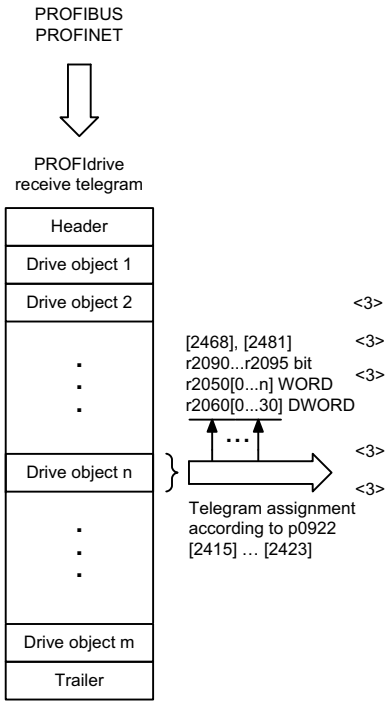

Signal receivers for PZD receive signals

	Signal	Meaning	PROFIdrive Signal No.	Interconnection parameter <1>	Function diagram	Data type <2>	Scaling
	STW1	Control word 1	1	(bitwise)	[2442][2443] <3> [2475] <3>	U16	-
	STW2	Control word 2	3	(bitwise)	[2444] [2445]	U16	-
	NSOLL_A	Speed setpoint A (16-bit)	5	p1070 (Erw. Soll.) p1155	[3030.2] [3080.4] <3>	I16	4000 hex ≙ p2000
	NSOLL_B	Speed setpoint B (32-bit)	7	p1070 (Erw. Soll.) p1155 p1430 (DSC) <3>	[3030.2] [3080.4] [3090.8] <3>	I32	4000 0000 hex ≙ p2000
<3>	G1_STW	Encoder 1 control word	9	p0480[0]	[4720]	U16	-
<3>	G2_STW	Encoder 2 control word	13	p0480[1]	[4720]	U16	-
<3>	G3_STW	Encoder 3 control word	17	p0480[2]	[4720]	U16	-
	A_DIGITAL	Digital output (16-bit)	22	(bitwise)	[2497]	U16	-
<3>	XERR	Position deviation	25	p1190	[3090.5]	I32	-
<3>	KPC	Position controller gain factor	26	p1191	[3090.5]	I32	-
	SATZANW	Pos block selection	32	(bitwise)	[2476]	U16	-
	MDI_TARPOS	MDI position	34	p2642	[3618]	I32	1 hex ≙ 1 LU
	MDI_VELOCITY	MDI velocity	35	p2643	[3618]	I32	1 hex ≙ 1000 LU/min
	MDI_ACC	MDI acceleration override	36	p2644	[3618]	I16	4000 hex ≙ 100%
	MDI_DEC	MDI deceleration override	37	p2645	[3618]	I16	4000 hex ≙ 100%
	MDI_MOD	MDI mode	38	(bitwise)	[2480]	U16	-
<4>	STW2_ENC	Control word 2 ENCODER	80	(bitwise)	[2433]	U16	-

<1> When selecting a standard telegram or a manufacturer-specific telegram via p0922, these interconnection parameters of the command data set CDS0 are automatically set.
<2> Data type according to to the PROFIdrive profile: I16 = Integer16, I32 = Integer32, U16 = Unsigned16, U32 = Unsigned32.
<3> Only for SINAMICS S120.
<4> Only for ENCODER.

Fig. 2-39 2439 – PZD receive signals, interconnection, profile-specific

© Siemens AG 2012 All Rights Reserved

PROFIdrive sampling time
Refer to [1020.7]

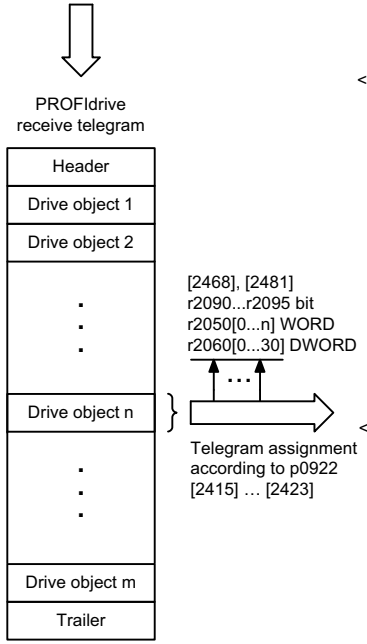

Signal receivers for PZD receive signals

	Signal	Meaning	PROFIdrive Signal No.	Interconnection parameter <1>	Function diagram	Data type <2>	Scaling
	MOMRED	Torque reduction	101	p1542	[5610.2]	I16	4000 hex ≙ p2003
	M_VST	Torque pre-control value	112	p1513[0]	[5060]	I16	4000 hex ≙ p2003
<3>	DSC_STW	DSC control word	114	p1194	[3090]	U16	
	T_SYMM	DSC Symmetrizing time constant	115	p1195	[3090]	U16	
	MT_STW	Measuring probe control word	130	p0682	-	U16	
	NOCKEN1_ZS_F	Nocken 1 Zeitstempel fallende Flanke	169	p0715[0]	-	U16	
	NOCKEN1_ZS_S	Nocken 1 Zeitstempel steigende Flanke	170	p0714[0]	-	U16	
	NOCKEN2_ZS_F	Nocken 1 Zeitstempel fallende Flanke	171	p0715[1]	-	U16	
	NOCKEN2_ZS_S	Nocken 1 Zeitstempel steigende Flanke	172	p0714[1]	-	U16	
	NOCKEN3_ZS_F	Nocken 1 Zeitstempel fallende Flanke	173	p0715[2]	-	U16	
	NOCKEN3_ZS_S	Nocken 1 Zeitstempel steigende Flanke	174	p0714[2]	-	U16	
	NOCKEN4_ZS_F	Nocken 1 Zeitstempel fallende Flanke	175	p0715[3]	-	U16	
	NOCKEN4_ZS_S	Nocken 1 Zeitstempel steigende Flanke	176	p0714[3]	-	U16	
	NOCKEN5_ZS_F	Nocken 1 Zeitstempel fallende Flanke	177	p0715[4]	-	U16	
	NOCKEN5_ZS_S	Nocken 1 Zeitstempel steigende Flanke	178	p0714[4]	-	U16	
<4>	NOCKEN6_ZS_F	Nocken 1 Zeitstempel fallende Flanke	179	p0715[5]	-	U16	
	NOCKEN6_ZS_S	Nocken 1 Zeitstempel steigende Flanke	180	p0714[5]	-	U16	
	NOCKEN7_ZS_F	Nocken 1 Zeitstempel fallende Flanke	181	p0715[6]	-	U16	
	NOCKEN7_ZS_S	Nocken 1 Zeitstempel steigende Flanke	182	p0714[6]	-	U16	
	NOCKEN8_ZS_F	Nocken 1 Zeitstempel fallende Flanke	183	p0715[7]	-	U16	
	NOCKEN8_ZS_S	Nocken 1 Zeitstempel steigende Flanke	184	p0714[7]	-	U16	
	POS_STW	Pos control word	203	(bitweise)	[2462]	U16	
	OVERRIDE	Pos velocity override	205	p2646	[3630]	I16	4000 hex ≙ 100%
	POS_STW1	Pos control word 1	220	(bitweise)	[2463]	U16	
	POS_STW2	Pos control word 2	222	(bitweise)	[2464]	U16	
	MDI_MODE	Pos MDI mode	229	p2654	[3620]	U16	
	A_DIGITAL_1	Digital output (16 bit)	307	(bitweise)	[2499]	U16	
<4>	M_LIM	Torque limit	310	p1503/p1552/p1554	-	U16	
<4>	M_ADD	Additional torque	311	p1495	-	U16	
	E_STW1	Control word 1 for Active Infeed (ALM, SMART)	320	(bitweise)	[2447]	U16	
	STW1_BM	Control word 1, variant for BM	322	(bitweise)	[2425]	U16	
	STW2_BM	Control word 2, variant for BM	324	(bitweise)	[2426]	U16	
	E_STW1_BM	Control word 1 for Active Infeed	326	(bitweise)	[2427]	U16	
	CU_STW1	Control word 1 for Control Unit	500	(bitweise)	[2495]	U16	

<1> When selecting a standard telegram or a manufacturer-specific telegram via p0922, these interconnection parameters of the command data set CDS0 are automatically set.
<2> Data type according to to the PROFIdrive profile: I16 = Integer16, I32 = Integer32, U16 = Unsigned16, U32 = Unsigned32.
<3> Only for S120.
<4> Only for S120/S150.

1	2	3	4	5	6	7	8
DO: A_INF, B_INF, CU_CX32, CU_G, CU_S, S_INF, SERVO, VECTOR					fp_2440_54_eng.vsd	Function diagram	- 2440 -
PROFIdrive - PZD receive signals, interconnection, manufacturer specific					23.11.11 V04.05.00	S120/S150/G130/G150	

Fig. 2-40 2440 – PZD receive signals, interconnection, manufacturer-specific

© Siemens AG 2012 All Rights Reserved

PROFIdrive sampling time
Refer to [1020.7]

Signal targets for STW1 in Interface Mode VIK-NAMUR (p2038 = 2) <1>

Signal	Meaning	Interconnection parameters	[Function diagram] internal control word	[Function diagram] signal target	Inverted
STW1.0	↑ = ON (pulses can be enabled) **0 = OFF1** (braking with ramp-function generator, then pulse suppression & ready for switching on)	p0840[0] = r2090.0	[2501.3]	[2610]	-
STW1.1	**1 = No OFF2** (enable is possible) <3> 0 = OFF2 (immediate pulse suppression and switching on inhibited)	p0844[0] = r2090.1	[2501.3]	[2610]	-
STW1.2	**1 = No OFF3** (enable possible) <3> 0 = OFF3 (braking with the OFF3 ramp p1135, then pulse suppression and switching on inhibited)	p0848[0] = r2090.2	[2501.3]	[2610]	-
STW1.3	**1 = Enable operation** (pulses can be enabled) 0 = Inhibit operation (suppress pulses)	p0852[0] = r2090.3	[2501.3]	[2610]	-
STW1.4	**1 = Operating condition** (the ramp-function generator can be enabled) 0 = Inhibit ramp-function generator (set the ramp-function generator output to zero)	p1140[0] = r2090.4	[2501.3]	[3060] [3070] [3080]	-
STW1.5	**1 = Enable the ramp-function generator** 0 = Stop the ramp-function generator (freeze the ramp-function generator output)	p1141[0] = r2090.5	[2501.3]	[3060] [3070]	-
STW1.6	**1 = Enable setpoint** 0 = Inhibit setpoint (set the ramp-function generator input to zero)	p1142[0] = r2090.6	[2501.3]	[3060] [3070] [3080]	-
STW1.7	↑ **= Acknowledge faults**	p2103[0] = r2090.7	[2546.1]	[8060]	-
STW1.8	**Reserved**	-	-	-	-
STW1.9	**Reserved**	-	-	-	-
STW1.10	**1 = Control via PLC** <2>	p0854[0] = r2090.10	[2501.3]	[2501]	-
STW1.11	**1 = Direction reversal**	p1113[0] = r2090.11	[2505.3]	[3040]	-
STW1.12	**1 = Unconditionally open the holding brake**	p0855[0] = r2090.12	[2501.3]	[2701]	-
STW1.13	**Reserved**	-	-	-	-
STW1.14	**Reserved**	-	-	-	-
STW1.15	**1 = Command Data Set selection CDS bit 0**	<4> p0810[0] = 2090.15	-	[8560]	-

<1> Used in telegram 20.
<2> STW1.10 must be set to ensure that the drive object accepts the process data (PZD).
<3> OC = Operating condition.
<4> Interconnection is not disabled.

© Siemens AG 2012 All Rights Reserved

PROFIdrive sampling time
Refer to [1020.7]

Signal targets for STW1 in Interface Mode SINAMICS (p2038 = 0) <1>

Signal	Meaning	Interconnection parameters	[Function diagram] internal control word	[Function diagram] signal target	Inverted
STW1.0	↑ = ON (pulses can be enabled) **0 = OFF1** (braking with ramp-function generator, then pulse suppression & ready for switching on)	p0840[0] = r2090.0	[2501.3]	[2610]	-
STW1.1	**1 = No OFF2** (enable is possible) 0 = OFF2 (immediate pulse suppression and switching on inhibited)	p0844[0] = r2090.1	[2501.3]	[2610]	-
STW1.2	**1 = No OFF3** (enable possible) 0 = OFF3 (braking with the OFF3 ramp p1135, then pulse suppression and switching on inhibited)	p0848[0] = r2090.2	[2501.3]	[2610]	-
STW1.3	**1 = Enable operation** (pulses can be enabled) 0 = Inhibit operation (suppress pulses)	p0852[0] = r2090.3	[2501.3]	[2610]	-
STW1.4	**1 = Operating condition** (the ramp-function generator can be enabled) 0 = Inhibit ramp-function generator (set the ramp-function generator output to zero)	p1140[0] = r2090.4	[2501.3]	[3060] [3070] [3080]	-
STW1.5	**1 = Continue ramp-function generator** 0 = Freeze ramp-function generator (freeze the ramp-function generator output)	p1141[0] = r2090.5	[2501.3]	[3060] [3070]	-
STW1.6	**1 = Enable setpoint** 0 = Inhibit setpoint (set the ramp-function generator input to zero)	p1142[0] = r2090.6	[2501.3]	[3060] [3070] [3080]	-
STW1.7	↑ **= 1. Acknowledge faults**	p2103[0] = r2090.7	[2546.1]	[8060]	-
STW1.8	**Reserved**	-	-	-	-
STW1.9	**Reserved**	-	-	-	-
STW1.10	**1 = Control via PLC** <2>	p0854[0] = r2090.10	[2501.3]	[2501]	-
STW1.11	**1 = Setpoint inversion** <3>	p1113[0] = r2090.11	[2505.3]	[3040]	-
STW1.12	**1 = Unconditionally open the holding brake**	p0855[0] = r2090.12	[2501.3]	[2701]	-
STW1.13	**1 = Motorized potentiometer setpoint raise** <3>	p1035[0] = r2090.13	[2505.3]	[3020]	-
STW1.14	**1 = Motorized potentiometer setpoint lower** <3>	p1036[0] = r2090.14	[2505.3]	[3020]	-
STW1.15	**Reserved**	-	-	-	-

<1> Used in telegrams 1, 2, 3, 4, 5 <5>, 6, 352.
<2> STW1.10 must be set to ensure that the drive object accepts the process data (PZD).
<3> Only for "expanded setpoint channel" and "extended ramp-function generator".
<4> OC = Operating condition.
<5> Only for SINAMICS S120.

1	2	3	4	5	6	7	8
DO: SERVO, VECTOR					fp_2442_54_eng.vsd	Function diagram	- 2442 -
PROFIdrive - STW1 control word interconnection (p2038 = 0)					07.11.11 V04.05.00	S120/S150/G130/G150	

Fig. 2-42 2442 – STW1 control word interconnection (p2038 = 0)

© Siemens AG 2012 All Rights Reserved

PROFIdrive sampling time
Refer to [1020.7]

Signal targets for STW2 in Interface Mode SINAMICS (p2038 = 0) <1>

Signal	Meaning	Interconnection parameters	[Function diagram] internal control word	[Function diagram] signal target	Inverted
STW2.0	**Drive data set selection DDS, bit 0**	p0820[0] = r2093.0 <4> r2092.0	-	[8565]	-
STW2.1	**Drive data set selection DDS, bit 1**	p0821[0] = r2093.1 <4> r2092.1	-	[8565]	-
STW2.2	**Drive data set selection DDS, bit 2**	p0822[0] = r2093.2 <4> r2092.2	-	[8565]	-
STW2.3	**Drive data set selection DDS, bit 3**	p0823[0] = r2093.3 <4> r2092.3	-	[8565]	-
STW2.4	**Drive data set selection DDS, bit 4**	p0824[0] = r2093.4 <4> r2092.4	-	[8565]	-
STW2.5	**Reserved**	-	-	-	-
STW2.6	**Reserved**	-	-	-	-
STW2.7	**1 = Parking axis**	p0897 = r2093.7 <4> r2092.7	-	-	-
STW2.8	**1 = Traverse to fixed endstop** <2> <3> <5>	p1545[0] = r2093.8	[2520.2]	[8012]	-
STW2.9	**Reserved**	-	-	-	-
STW2.10	**Reserved**	-	-	-	-
STW2.11	**1 = Motor changeover, feedback Signal**	p0828[0] = r2093.11 <4> r2092.11	-	-	-
STW2.12	**Master sign-of-life, bit 0** <5>	p2045 = r2050[3] <4> r2050[2]	-	[2410]	-
STW2.13	**Master sign-of-life, bit 1** <5>				
STW2.14	**Master sign-of-life, bit 2** <5>				
STW2.15	**Master sign-of-life, bit 3** <5>				

<1> Used in telegrams 2, 3, 4, 5, 6, 9, 110 and 111. <3> <2> Not for telegrams 9, 110 and 111. <3> Only for SINAMICS S120. <4> Only for telegram 9. <5> Not for Vector U/f.

1	2	3	4	5	6	7	8
DO: SERVO, VECTOR					fp_2444_54_eng.vsd	Function diagram	- 2444 -
PROFIdrive - STW2 control word interconnection (p2038 = 0)					14.01.10 V04.05.00	S120/S150/G130/G150	

Fig. 2-43 2444 – STW2 control word interconnection (p2038 = 0)

© Siemens AG 2012 All Rights Reserved

PROFIdrive sampling time
Refer to [1020.7]

Signal targets for E_STW1

<1> <7>

Signal	Meaning	Interconnection parameters	[Function diagram] internal control word			[Function diagram] signal target			Inverted
			A_INF	B_INF <6>	S_INF <5>	A_INF	B_INF <6>	S_INF <5>	
STW1.0	↑ **= ON** (close pre-charging/line contactor, pulses can be enabled) 0 = OFF1 (reduce Vdc along a ramp, suppress pulse and open pre-charging/line contactor)	p0840[0] = r2090.0	[8920.3]	[8720.3]	[8820.3]	[8932]	[8732]	[8832]	-
STW1.1	**1 = No OFF2 (enable is possible)** 0 = OFF2 (immediate pulse suppression and switching on inhibited)	p0844[0] = r2090.1	[8920.3]	[8720.3]	[8820.3]	[8932]	[8732]	[8832]	-
STW1.2	**Reserved**		-	-	-	-	-	-	-
STW1.3	**1 = Enable operation (pulses can be enabled)** <3> 0 = Inhibit operation (suppress pulses)	p0852[0] = r2090.3	[8920.3]	-	[8820.3]	[8932]	-	[8832]	-
STW1.4	**Reserved**	-	-	-	-	-	-	-	-
STW1.5	**1 = Infeed, inhibit motoring operation** <4>	p3532= r2090.5	[8920.3]	-	-	[8920]	-	-	-
STW1.6	**1 = Infeed, inhibit regenerative operation** <3>	p3533= r2090.6	[8920.3]	-	[8820.3]	[8920]	-	[8820]	-
STW1.7	↑ **= Acknowledge faults**	p2103[0] = r2090.7	[2546.3]			[8060]			-
STW1.8	**Reserved**	-	-	-	-	-	-	-	-
STW1.9	**Reserved**	-	-	-	-	-	-	-	-
STW1.10	**1 = Control via PLC** <2>	p0854[0] = r2090.10	[8920.3]	[8720.3]	[8820.3]	[8920]	[8720]	[8820]	-
STW1.11	**Reserved**	-	-	-	-	-	-	-	-
STW1.12	**Reserved**	-	-	-	-	-	-	-	-
STW1.13	**Reserved**	-	-	-	-	-	-	-	-
STW1.14	**Reserved**	-	-	-	-	-	-	-	-
STW1.15	**Reserved**	-	-	-	-	-	-	-	-

<1> Used in telegram 370.
<2> STW1.10 must be set to ensure that the drive object accepts the process data (PZD).
<3> Only for A_INF, S_INF
<4> Only for A_INF
<5> B_INF and S_INF only for S120.
<6> Only for S120 and G150
<7> Not for G130.

1	2	3	4	5	6	7	8
DO: A_INF, B_INF, S_INF					fp_2447_54_eng.vsd	Function diagram	- 2447 -
PROFIdrive - E_STW1 control word infeed interconnection					22.10.10 V04.05.00	S120/S150/G130/G150	

Fig. 2-44 2447 – E_STW1 control word infeed interconnection

© Siemens AG 2012 All Rights Reserved

Signal sources for PZD send signals

<1>

	Signal	Description	PROFIdrive Signal No.	Interconnection parameter	Function diagram	Data type	Scaling
	ZSW1	Status word 1	2	r2089[0]	[2452][2453][2479] <2>	U16	-
	ZSW2	Status word 2	4	r2089[1]	[2454][2455] <2>	U16	-
	NIST_A	Speed setpoint A (16 bit)	6	r0063 SERVO r0063[0] VECTOR r0061 ENCODER	[4710] <2> [4715] [4710]	I16	4000 hex ≙ p2000
	NIST_B	Speed setpoint B (32 bit)	8	r0063 SERVO r0063[0] VECTOR r0061 ENCODER	[4710] <2> [4715] [4710]	I32	4000 0000 hex ≙ p2000
	G1_ZSW	Encoder 1 status word	10	r0481[0]	[4730]	U16	-
	G1_XIST1	Encoder 1 actual position 1	11	r0482[0]	[4704]	U32	-
	G1_XIST2	Encoder 1 actual position 2	12	r0483[0]	[4704]	U32	-
	G2_ZSW	Encoder 2 status word	14	r0481[1]	[4730]	U16	-
<2>	G2_XIST1	Encoder 2 actual position 1	15	r0482[1]	[4704]	U32	-
	G2_XIST2	Encoder 2 actual position 2	16	r0483[1]	[4704]	U32	-
	G3_ZSW	Encoder 3 status word	18	r0481[2]	[4730]	U16	-
	G3_XIST1	Encoder 3 actual position 1	19	r0482[2]	[4704]	U32	-
	G3_XIST2	Encoder 3 actual position 2	20	r0483[2]	[4704]	U32	-
	E_DIGITAL	Digital inputs	21	r2089[2]	[2459]	U16	-
	E_ANALOG	Analog inputs	23	p2051[20]	-	U16	-
<2>	XIST_A	Position actual value A	28	r2521[0]	[4010]	I32	1 hex ≙ 1 LU
<2>	AKTSATZ	Pos selected block	33	r2670	[3650]	U16	-
	IAIST_GLATT	Absolute actual current, smoothed	51	r0068[1]	[6714]	I16	4000 hex ≙ p2002
	ITIST_GLATT	Current actual value, torque-generating	52	r0078[1]	[6714]	I16	4000 hex ≙ p2002
	MIST_GLATT	Actual torque smoothed	53	r0080[1]	[6714]	I16	4000 hex ≙ p2003
	PIST_GLATT	Power factor, smoothed	54	r0082[1]	[6714]	I16	4000 hex ≙ p2004
	NIST_A_GLATT	Actual speed, smoothed	57	r0063[1]	[4715]	I16	4000 hex ≙ p2000
	MELD_NAMUR	VIK-NAMUR message bit bar	58	r3113	-	U16	-
	IAIST	Absolute actual current	59	r0068[0]	[6714]	I16	4000 hex ≙ p2002
	MIST	Actual torque	60	r0080[0]	[6714]	I16	4000 hex ≙ p2003
<3>	ZSW2_ENC	Status word 2 ENCODER	81	(bitwise)	[2434]	U16	-

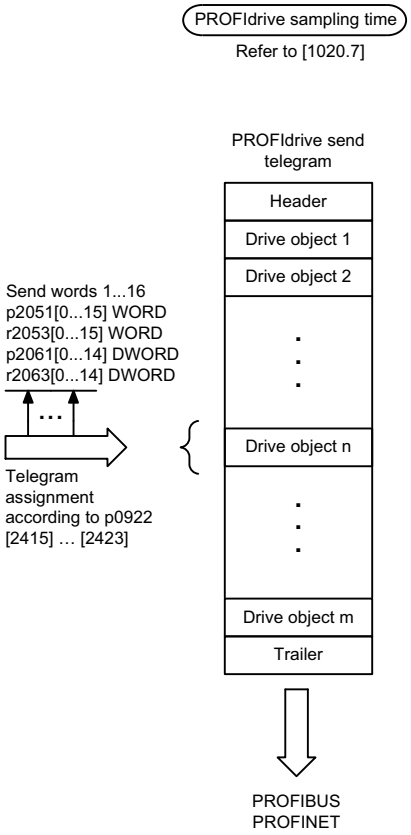

<1> Data type according to the PROFIdrive profile: I16 = Integer16, I32 = Integer32, U16 = Unsigned16, U32 = Unsigned32.
<2> Only for SINAMICS S120.
<3> Only for ENCODER.

1	2	3	4	5	6	7	8
DO: A_INF, B_INF, ENC, S_INF, SERVO, VECTOR					fp_2449_54_eng.vsd	Function diagram	- 2449 -
PROFIdrive - PZD send signals interconnection, profile-specific					23.11.11 V04.05.00	S120/S150/G130/G150	

Fig. 2-45 2449 – PZD send signals, interconnection, profile-specific

© Siemens AG 2012 All Rights Reserved

Signal sources for PZD send signals

<1>

	Signal	Description	PROFIdrive Signal No.	Interconnection parameter	Function diagram	Data type	Scaling
	MELDW	Message word	102	r2089[2]	[2456]	U16	-
	MSOLL_GLATT	Total speed setpoint smoothed	120	r0079[1]	[5610] <2>	I16	4000 hex ≙ p2003
	AIST_GLATT	Torque utilization smoothed	121	r0081	[8012]	I16	4000 hex ≙ 100%
	MT_ZSW	Measuring probe status word	131	r0688	-	U16	-
	MT1_ZS_F	Measuring probe 1 measuring time falling edge	132	r0687[0]	-	U16	-
	MT1_ZS_S	Measuring probe 1 measuring time rising edge	133	r0686[0]	-	U16	-
	MT2_ZS_F	Measuring probe 2 measuring time falling edge	134	r0687[1]	-	U16	-
	MT2_ZS_S	Measuring probe 2 measuring time rising edge	135	r0686[1]	-	U16	-
	MT3_ZS_F	Measuring probe 3 measuring time falling edge	136	r0687[2]	-	U16	-
	MT3_ZS_S	Measuring probe 3 measuring time rising edge	137	r0686[2]	-	U16	-
	MT4_ZS_F	Measuring probe 4 measuring time falling edge	138	r0687[3]	-	U16	-
	MT4_ZS_S	Measuring probe 4 measuring time rising edge	139	r0686[3]	-	U16	-
	MT5_ZS_F	Measuring probe 5 measuring time falling edge	140	r0687[4]	-	U16	-
	MT5_ZS_S	Measuring probe 5 measuring time rising edge	141	r0686[4]	-	U16	-
	MT6_ZS_F	Measuring probe 6 measuring time falling edge	142	r0687[5]	-	U16	-
	MT6_ZS_S	Measuring probe 6 measuring time rising edge	143	r0686[5]	-	U16	-
	MT7_ZS_F	Measuring probe 7 measuring time falling edge	144	r0687[6]	-	U16	-
	MT7_ZS_S	Measuring probe 7 measuring time rising edge	145	r0686[6]	-	U16	-
<2>	MT8_ZS_F	Measuring probe 8 measuring time falling edge	146	r0687[7]	-	U16	-
	MT8_ZS_S	Measuring probe 8 measuring time rising edge	147	r0686[7]	-	U16	-
	MT_DIAG	Measuring probe (stage 3) diagnostics word	148	r0567	-	U16	-
	MT_ZS1	Measuring probe (stage 3) measuring time 1	149	r0565[0]	-	U16	-
	• • •	• • •	• • •	• • •	• • •	• • •	• • •
	MT_ZS16	Measuring probe (Stufe 3) measuring time 16	164	r0565[15]	-	U16	-
	MT_ZSB1	Measuring probe (Stufe 3) measuring timebezug 1	165	r0566[0]	-	U16	-
	MT_ZSB2	Measuring probe (Stufe 3) measuring timebezug 2	166	r0566[1]	-	U16	-
	MT_ZSB3	Measuring probe (Stufe 3) measuring timebezug 3	167	r0566[2]	-	U16	-
	MT_ZSB4	Measuring probe (Stufe 3) measuring timebezug 4	168	r0566[3]	-	U16	-
	POS_ZSW	Pos status word	204	r2683	[3645]	U16	-
	POS_ZSW1	Pos status word 1	221	r2089[3]	[2466]	U16	-
	POS_ZSW2	Pos status word 2	223	r2089[4]	[2467]	U16	-
	FAULT_CODE	Fault code	301	r2131	[8060]	U16	-
	WARN_CODE	Alarm code	303	r2132	[8065]	U16	-
	E_DIGITAL_1	Digital input (16 Bit)	307	r2089[3]	[2500]	U16	-
<2>	E_ZSW1	Status word 1 for Active Infeed	321	r2089[1]	[2457]	U16	-
	ZSW1_BM	Status word 1, variant for BM	323	r2089[0]	[2428]	U16	-
	ZSW2_BM	Status word 2, variant for BM	325	r2089[1]	[2429]	U16	-
	E_ZSW1_BM	Status word 1 for Infeed, variant for BM (ALM, BLM, SLM)	327	r2080	[2430]	U16	-
	CU_ZSW1	Status word 1 for Control Unit	501	r2089[1]	[2496]	U16	-

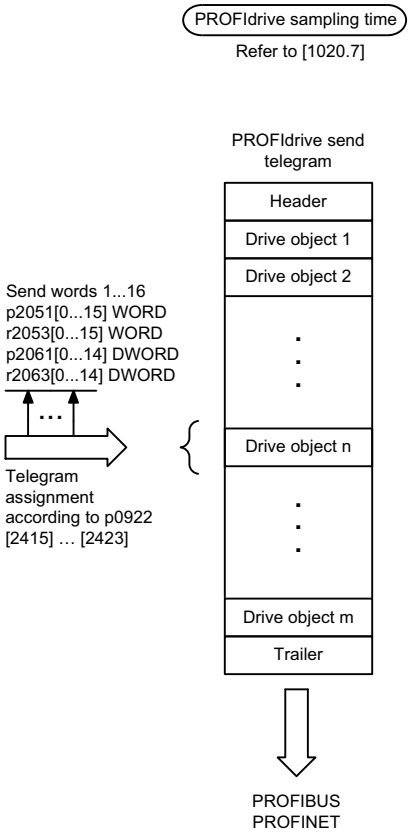

<1> Data type according to the PROFIdrive profile: I16 = Integer16, I32 = Integer32, U16 = Unsigned16, U32 = Unsigned32
<2> Only for SINAMICS S120.

1	2	3	4	5	6	7	8
DO: A_INF, B_INF, S_INF, SERVO, TM41, VECTOR					fp_2450_54_eng.vsd	Function diagram	- 2450 -
PROFIdrive - PZD send signals, interconnection, manufacture specific					23.11.11 V04.05.00	S120/S150/G130/G150	

Fig. 2-46 2450 – PZD send signals interconnection manufacturer-specific

© Siemens AG 2012 All Rights Reserved

PROFIdrive sampling time
Refer to [1020.7]

Signal sources for ZSW1 in Interface Mode VIK-NAMUR (p2038 = 2) <1>

Signal	Meaning	Interconnection parameters	[Function diagram] Internal status word	[Function diagram] Signal source	Inverted <2>
ZSW1.0	**1 = Ready for switching on**	p2080[0] = r0899.0	[2503.7]	[2610]	-
ZSW1.1	**1 = Ready for operation** (DC link loaded, pulses inhibited)	p2080[1] = r0899.1	[2503.7]	[2610]	-
ZSW1.2	**1 = Operation enabled** (drive follows n_set)	p2080[2] = r0899.2	[2503.7]	[2610]	-
ZSW1.3	**1 = Fault present**	p2080[3] = r2139.3	[2548.7]	[8060]	-
ZSW1.4	**1 = No coast down active (OFF2 inactive)**	p2080[4] = r0899.4	[2503.7]	[2610]	-
ZSW1.5	**1 = No fast stop active (OFF3 inactive)**	p2080[5] = r0899.5	[2503.7]	[2610]	-
ZSW1.6	**1 = Power-on inhibit active**	p2080[6] = r0899.6	[2503.7]	[2610]	-
ZSW1.7	**1 = Alarm present**	p2080[7] = r2139.7	[2548.7]	[8065]	-
ZSW1.8	**1 = Speed setpoint - actual value deviation within tolerance t_off**	p2080[8] = r2197.7	[2534.7]	[8010]	-
ZSW1.9	**1 = Control requested** <3>	p2080[9] = r0899.9	[2503.7]	[2503]	-
ZSW1.10	**1 = f or n comparison value reached/exceeded**	p2080[10] = r2199.1	[2536.7]	[8010]	-
ZSW1.11	**1 = I, M, or P limit not reached**	p2080[11] = r0056.13	[2522.7]	[6060]	✔
ZSW1.12	**Reserved**	-	-	-	-
ZSW1.13	**1 = No motor overtemperature alarm**	p2080[13] = r2135.14	[2548.7]	[8016]	✔
ZSW1.14	**1 = Motor rotates forwards (n_act ≥ 0)** **0 = Motor rotates backwards (n_act < 0)**	p2080[14] = r2197.3	[2534.7]	[8010]	-
ZSW1.15	**1 = Command Data Set selection CDS bit 0**	<4> p2080[15] = r0836.0	-	-	-

<1> Used in telegram 20.
<2> The ZSW1 is generated using the binector-connector converter (BI: p2080[0...15], inversion: p2088[0].0...p2088[0].15)
<3> The drive object is ready to accept data.
<4> Interconnection is not disabled.

1	2	3	4	5	6	7	8
DO: VECTOR					fp_2451_54_eng.vsd	Function diagram	- 2451 -
PROFIdrive - ZSW1 status word interconnection (p2038 = 2)					14.01.10 V04.05.00	S120/S150/G130/G150	

Fig. 2-47 2451 – ZSW1 status word interconnection (p2038 = 2)

© Siemens AG 2012 All Rights Reserved

PROFIdrive Abtastzeit
siehe [1020.7]

Signal sources for ZSW1 im Interface Mode SINAMICS (p2038 = 0) <1>

Signal	Meaning	Interconnection parameters	[Function diagram] Internal status word	[Function diagram] signal source	Inverted <2>
ZSW1.0	**1 = Ready for switching on**	p2080[0] = r0899.0	[2503.7]	[2610]	-
ZSW1.1	**1 = Ready for operation**	p2080[1] = r0899.1	[2503.7]	[2610]	-
ZSW1.2	**1 = Operation enabled**	p2080[2] = r0899.2	[2503.7]	[2610]	-
ZSW1.3	**1 = Fault present**	p2080[3] = r2139.3	[2548.7]	[8060]	-
ZSW1.4	**1 = No coast down active (OFF2 inactive)**	p2080[4] = r0899.4	[2503.7]	[2610]	-
ZSW1.5	**1 = No fast stop active (OFF3 inactive)**	p2080[5] = r0899.5	[2503.7]	[2610]	-
ZSW1.6	**1 = Switching on inhibited active**	p2080[6] = r0899.6	[2503.7]	[2610]	-
ZSW1.7	**1 = Alarm present**	p2080[7] = r2139.7	[2548.7]	[8065]	-
ZSW1.8	**1 = Speed setpoint - actual value deviation within tolerance t_off**	p2080[8] = r2197.7	[2534.7]	[8010]	-
ZSW1.9	**1 = Control requested** <3>	p2080[9] = r0899.9	[2503.7]	[2503]	-
ZSW1.10	**1 = f or n comparison value reached/exceeded**	p2080[10] = r2199.1	[2536.7]	[8010]	-
ZSW1.11	**1 = I, M, or P limit reached** <4>	p2080[11] = r1407.7	[2522.7]	[5610] [6060] <5>	✔
ZSW1.12	**1 = Open the holding brake**	p2080[12] = r0899.12	[2503.7]	[2701]	-
ZSW1.13	**1 = No motor overtemperature alarm**	p2080[13] = r2135.14	[2548.7]	[8016]	✔
ZSW1.14	**1 = Motor rotates forwards (n_act ≥ 0)** **0 = Motor rotates backwards (n_act < 0)**	p2080[14] = r2197.3	[2534.7]	[8010]	-
ZSW1.15	**1 = No alarm, thermal overload, power unit**	p2080[15] = r2135.15	[2548.7]	[8014]	✔

<1> Used in telegrams 1, 2, 3, 4, 5, 6, 352. (<5>)
<2> The ZSW1 is generated using the binector-connector converter (BI: p2080[0...15], inversion: p2088[0].0...p2088[0].15)
<3> The drive object is ready to accept data.
<4> Not for VECTOR U/f.
<5> Only for SINAMICS S120.

1	2	3	4	5	6	7	8
DO: SERVO, VECTOR					fp_2452_54_eng.vsd	Function diagram	- 2452 -
PROFIdrive - ZSW1 status word interconnection (p2038 = 0)					26.07.11 V04.05.00	S120/S150/G130/G150	

Fig. 2-48 2452 – ZSW1 status word interconnection (p2038 = 0)

© Siemens AG 2012 All Rights Reserved

PROFIdrive sampling time
Refer to [1020.7]

Signal sources for ZSW2 in Interface Mode SINAMICS (p2038 = 0) <1>

	Signal	Meaning	Interconnection parameters	[Function diagram] internal status word	[Function diagram] signal source	Inverted
	ZSW2.0	**1 = Drive data set DDS effective, bit 0**	p2081[0] = r0051.0	-	[8565]	-
	ZSW2.1	**1 = Drive data set DDS effective, bit 1**	p2081[1] = r0051.1	-	[8565]	-
	ZSW2.2	**1 = Drive data set DDS effective, bit 2**	p2081[2] = r0051.2	-	[8565]	-
	ZSW2.3	**1 = Drive data set DDS effective, bit 3**	p2081[3] = r0051.3	-	[8565]	-
	ZSW2.4	**1 = Drive data set DDS effective, bit 4**	p2081[4] = r0051.4	-	[8565]	-
	ZSW2.5	**1 = Alarm class bit 0**	p2081[5] = r2139.11	-	[2548]	-
	ZSW2.6	**1 = Alarm class bit 1**	p2081[6] = r2139.12	-	[2548]	-
	ZSW2.7	**1 = Parking axis active**	p2081[7] = r0896.0	-	-	-
<3> <4>	ZSW2.8	**1 = Traverse to fixed endstop**	p2081[8] = r1406.8	-	[2520]	-
	ZSW2.9	**Reserved**	-	-	-	-
	ZSW2.10	**1 = Pulses enabled**	p2082[13] = r0899.11	[2503.7]	[2610]	-
	ZSW2.11	**1 = Motor data set changeover active**	p2081[11] = r0835.0	-	-	-
<2> <4>	ZSW2.12	**Slave sign-of-life bit 0**	Implicitly interconnected	-	-	-
	ZSW2.13	**Slave sign-of-life bit 1**				
	ZSW2.14	**Slave sign-of-life bit 2**				
	ZSW2.15	**Slave sign-of-life bit 3**				

<1> Used in telegrams 2, 3, 4, <3>5, 6, 9, 110, 111.
<2> These signals are automatically interconnected for clock-cycle synchronous operation.
<3> Only for SINAMICS S120.
<4> Not for Vector U/f.

1	2	3	4	5	6	7	8
DO: SERVO, VECTOR					fp_2454_54_eng.vsd	Function diagram	- 2454 -
PROFIdrive - ZSW2 status word interconnection (p2038 = 0)					15.01.10 V04.05.00	S120/S150/G130/G150	

Fig. 2-49 2454 – ZSW2 status word interconnection (p2038 = 0)

© Siemens AG 2012 All Rights Reserved

PROFIdrive sampling time
Refer to [1020.7]

Signal sources for E_ZSW1

<1> <5>

Signal	Meaning	Interconnection parameters	[Function diagram] signal source			[Function diagram] internal status word			Inverted
			A_INF	B_INF <4>	S_INF <3>	A_INF	B_INF <4>	S_INF <3>	
ZSW1.0	**1 = Ready for switching on**	p2080[0] = r0899.0	[8932]	[8732]	[8832]	[8926.7]	[8726.7]	[8826.7]	-
ZSW1.1	**1 = Ready for operation**	p2080[1] = r0899.1	[8932]	[8732]	[8832]	[8926.7]	[8726.7]	[8826.7]	-
ZSW1.2	**1 = Operation enabled**	p2080[2] = r0899.2	[8932]	[8732]	[8832]	[8926.7]	[8726.7]	[8826.7]	-
ZSW1.3	**1 = Fault present**	p2080[3] = r2139.3	[8060]			[2548.7]			-
ZSW1.4	**1 = No OFF2 effective**	p2080[4] = r0899.4	[8932]	[8732]	[8832]	[8926.7]	[8726.7]	[8826.7]	-
ZSW1.5	**Reserved**	-	-	-	-	-	-	-	-
ZSW1.6	**1 = Switching on inhibited**	p2080[6] = r0899.6	[8932]	[8732]	[8832]	[8926.7]	[8726.7]	[8826.7]	-
ZSW1.7	**1 = Alarm present**	p2080[7] = r2139.7	[8065]			[2548.7]			-
ZSW1.8	**Reserved**	-	-	-	-	-	-	-	-
ZSW1.9	**1 = PLC requests control** <2>	p2080[9] = r0899.9	[8926]	[8726]	[8826]	[8926.7]	[8726.7]	[8826.7]	-
ZSW1.10	**Reserved**	-	-	-	-	-	-	-	-
ZSW1.11	**1 = Pre-charging completed**	p2080[11] = r0899.11	[8950]	[8750]	[8850]	[8926.7]	[8726.7]	[8826.7]	-
ZSW1.12	**1 = Line contactor closed**	p2080[12] = r0899.12	[8934]	[8734]	[8834]	[8926.7]	[8726.7]	[8826.7]	-
ZSW1.13	**Reserved**	-	-	-	-	-	-	-	-
ZSW1.14	**Reserved**	-	-	-	-	-	-	-	-
ZSW1.15	**Reserved**	-	-	-	-	-	-	-	-

<1> Used in telegram 370.
<2> The drive object is ready to accept data.
<3> Only for S120.
<4> Only for S120 and G150.
<5> Not for G130.

1	2	3	4	5	6	7	8
DO: A_INF, B_INF, S_INF					fp_2457_54_eng.vsd	Function diagram	- 2457 -
PROFIdrive - E_ZSW1 status word infeed interconnection					22.10.10 V04.05.00	S120/S150/G130/G150	

Fig. 2-50 2457 – E_ZSW1 status word infeed interconnection

© Siemens AG 2012 All Rights Reserved

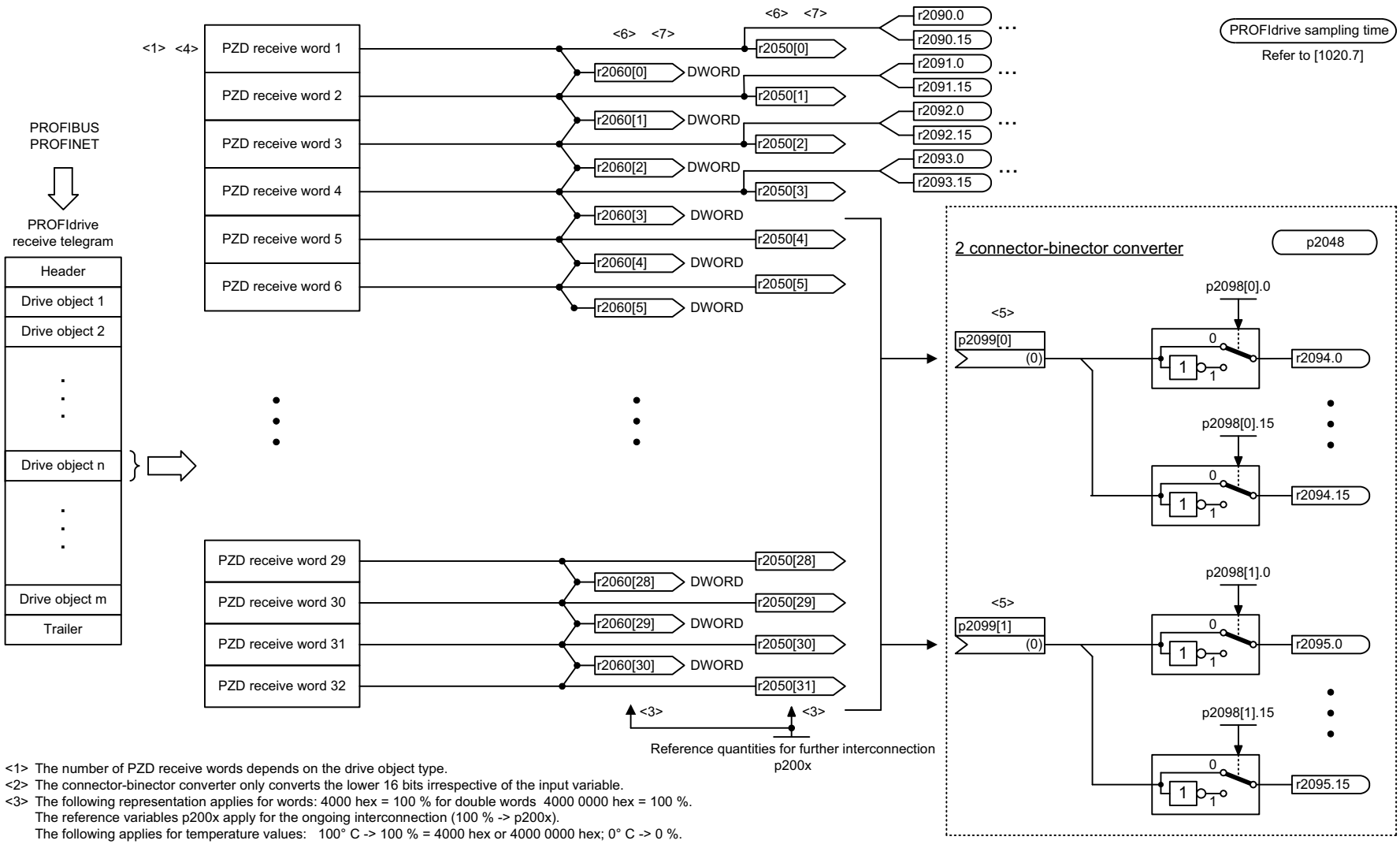

<1> The number of PZD receive words depends on the drive object type.
<2> The connector-binector converter only converts the lower 16 bits irrespective of the input variable.
<3> The following representation applies for words: 4000 hex = 100 % for double words 4000 0000 hex = 100 %.
The reference variables p200x apply for the ongoing interconnection (100 % -> p200x).
The following applies for temperature values: 100° C -> 100 % = 4000 hex or 4000 0000 hex; 0° C -> 0 %.
<4> In order to maintain the PROFIdrive profile, receive word 1 must be used as control word (STW1) (due to bit 10 "control requested").
<5> Using the connector-binector converters, the bits can be extracted from two of the PZD receive words 5 to 32 and used as binectors.
<6> Every PZD word can be assigned a word or a double word. Only one of the 2 interconnection parameters r2050 or r2060 can have a value ≠ 0 for a PZD word.
<7> When interconnecting a connector output multiple times all the connector inputs must have either Integer or FloatingPoint data type.

1	2	3	4	5	6	7	8
DO: ENC, SERVO, TM41, VECTOR					fp_2468_54_eng.vsd	Function diagram	- 2468 -
PROFIdrive - IF1 receive telegram, free interconnection via BICO (p0922 = 999)					27.05.10 V04.05.00	S120/S150/G130/G150	

Fig. 2-51 2468 – IF1 receive telegram, free interconnection via BICO (p0922 = 999)

© Siemens AG 2012 All Rights Reserved

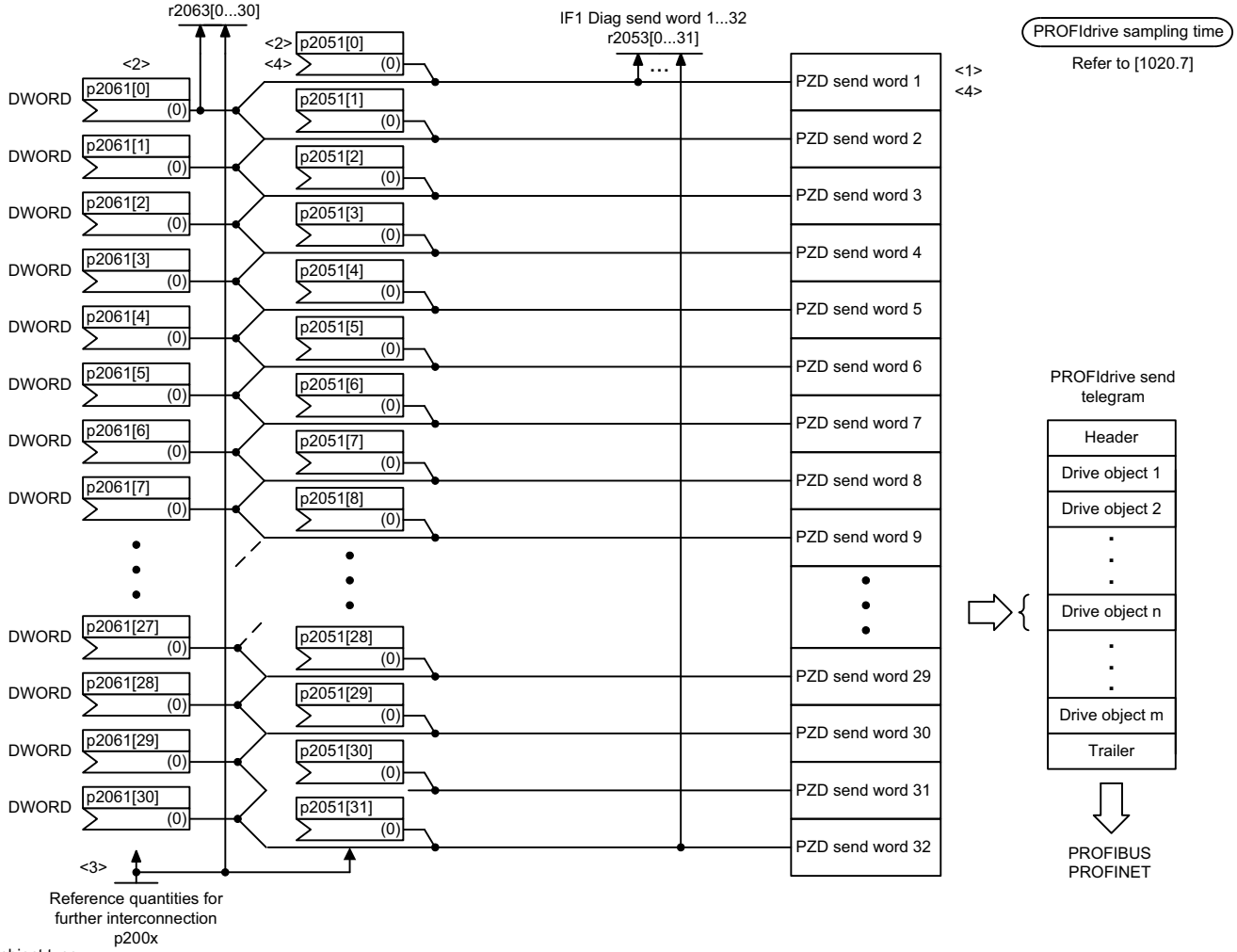

<1> The number of PZD send words depends on the drive object type.
<2> A PZD send word can either be supplied via connector input p2051[x] (WORD) or via p2061[x] (DWORD).
The two corresponding connector inputs cannot be interconnected.
<3> Physical word and double word values are inserted in the telegram as referenced variables. p200x apply as reference variables (telegram contents = 4000 hex or 4000 0000 hex in the case of double words, if the input variable has the value p200x).
The following applies for temperature values: 100° C -> 100 % = 4000 hex or 4000 0000 hex; 0° C -> 0%.
<4> To comply with the PROFIdrive profile, send word 1 must be used as status word 1 (ZSW1), not as DWORD.

1	2	3	4	5	6	7	8
DO: ENC, SERVO, TM41, VECTOR					fp_2470_54_eng.vsd	Function diagram	- 2470 -
PROFIdrive - IF1 send telegram, free interconnection via BICO (p0922 = 999)					09.12.11 V04.05.00	S120/S150/G130/G150	

Fig. 2-52 2470 – IF1 send telegram, free interconnection via BICO (p0922 = 999)

© Siemens AG 2012 All Rights Reserved

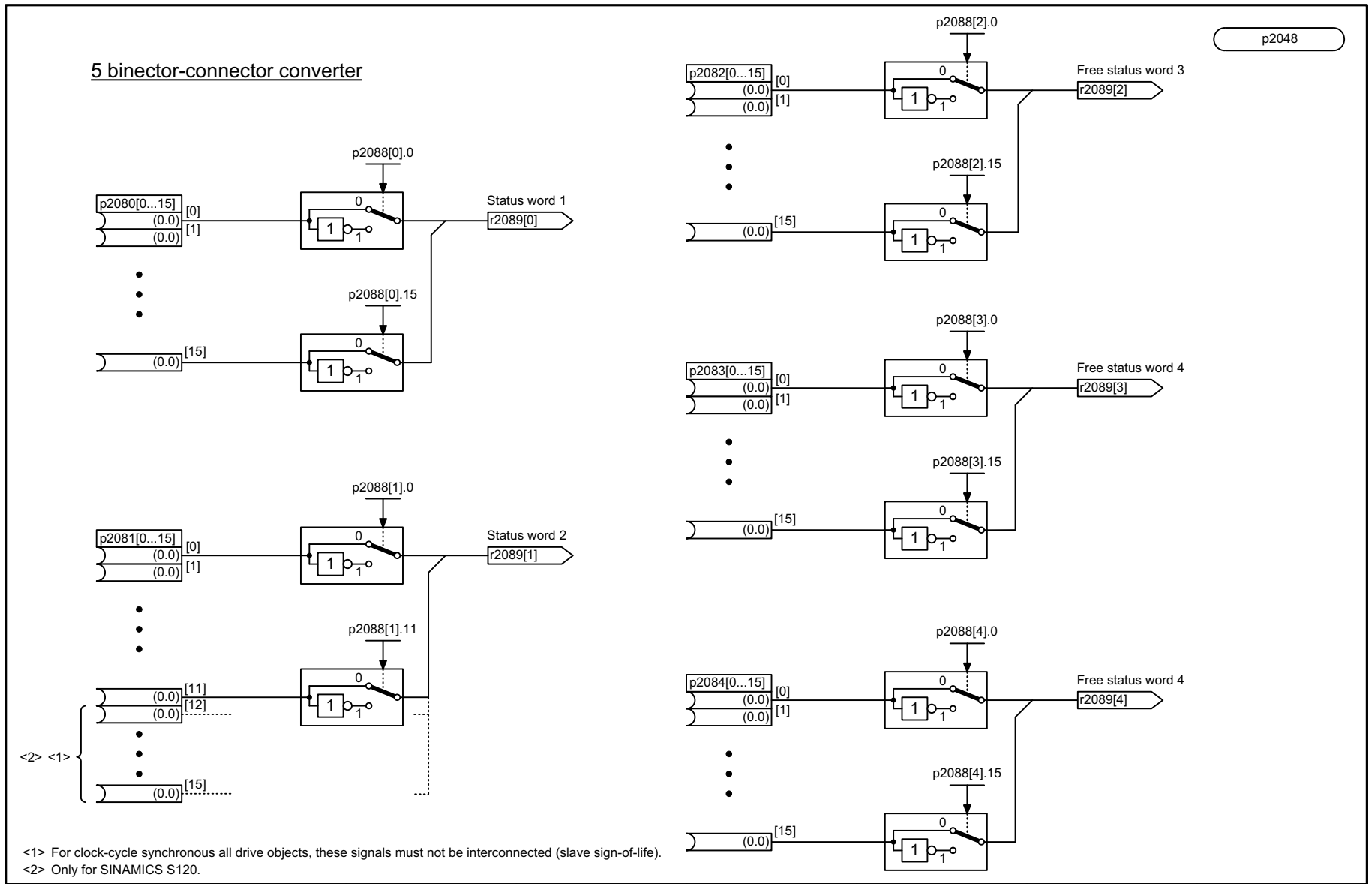

<1> For clock-cycle synchronous all drive objects, these signals must not be interconnected (slave sign-of-life).
<2> Only for SINAMICS S120.

1	2	3	4	5	6	7	8
DO: All objects					fp_2472_54_eng.vsd	Function diagram	- 2472 -
PROFIdrive - IF1 status words, free interconnection					15.01.10 V04.05.00	S120/S150/G130/G150	

Fig. 2-53 2472 – IF1 status words, free interconnection

© Siemens AG 2012 All Rights Reserved

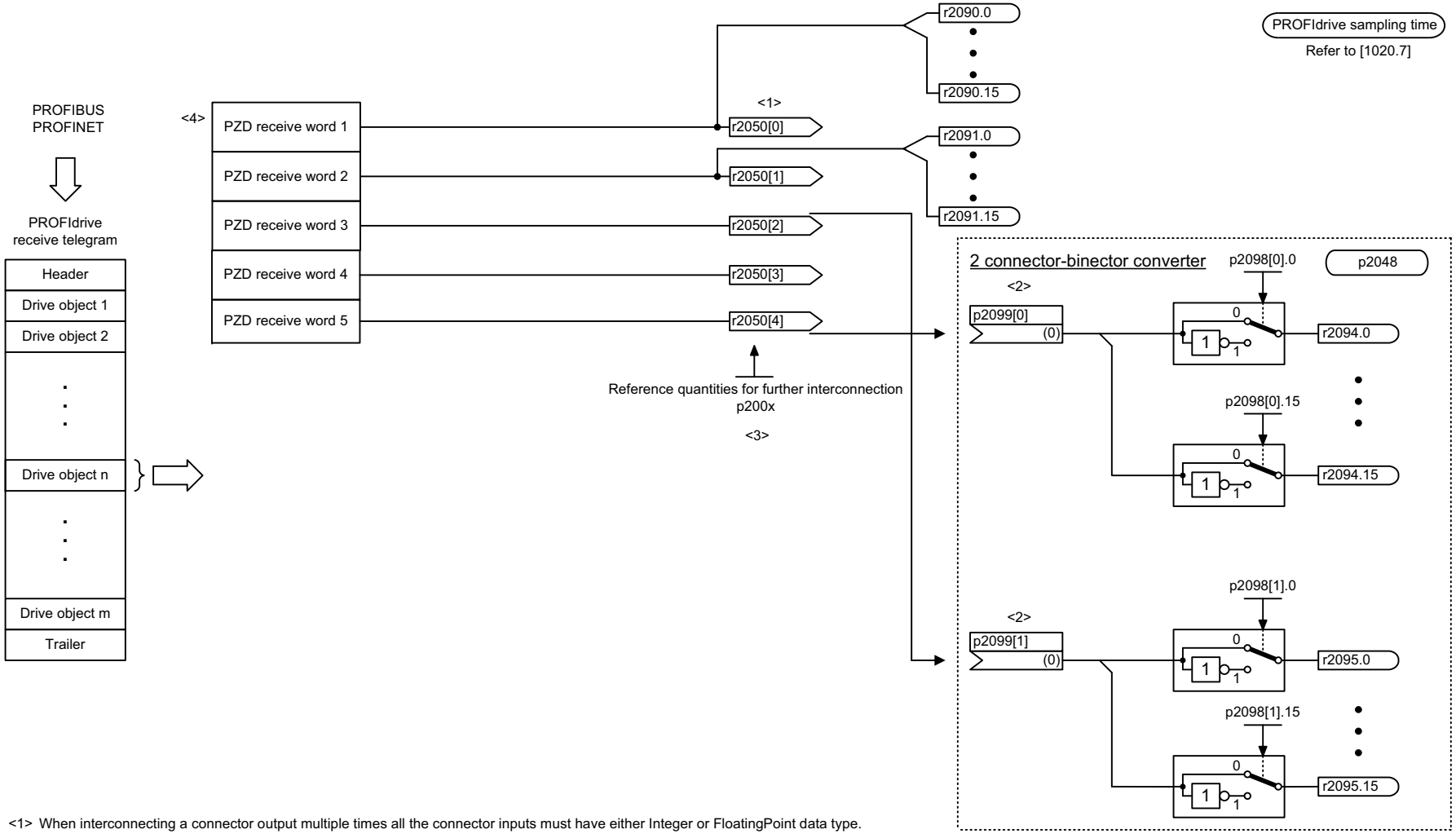

<1> When interconnecting a connector output multiple times all the connector inputs must have either Integer or FloatingPoint data type.
<2> Using the two connector-binector converters, two of the PZD receive words 3 to 5 can be converted into binectors for continued interconnection.
<3> The following representation applies for words: 4000 hex = 100 %.
The reference variables p200x apply for the ongoing interconnection (100 % -> p200x).
The following applies for temperature values: 100 °C -> 100 % = 4000 hex; 0 °C -> 0 %.
<4> To comply with the PROFIdrive profile, receive word 1 for A_INF, B_INF, S_INF and CU_S must be used as control word (STW1) (due to bit 10 "control requested").

1	2	3	4	5	6	7	8
DO: A_INF, B_INF, S_INF, CU_G, CU_S, TB30, TM15DI_DO, TM31, TM120					fp_2481_54_eng.vsd	Function diagram	- 2481 -
PROFIdrive - IF1 receive telegram, free interconnection via BICO (p0922 = 999)					21.01.11 V04.05.00	S120/S150/G130/G150	

Fig. 2-54 2481 – IF1 receive telegram, free interconnection via BICO (p0922 = 999)

© Siemens AG 2012 All Rights Reserved

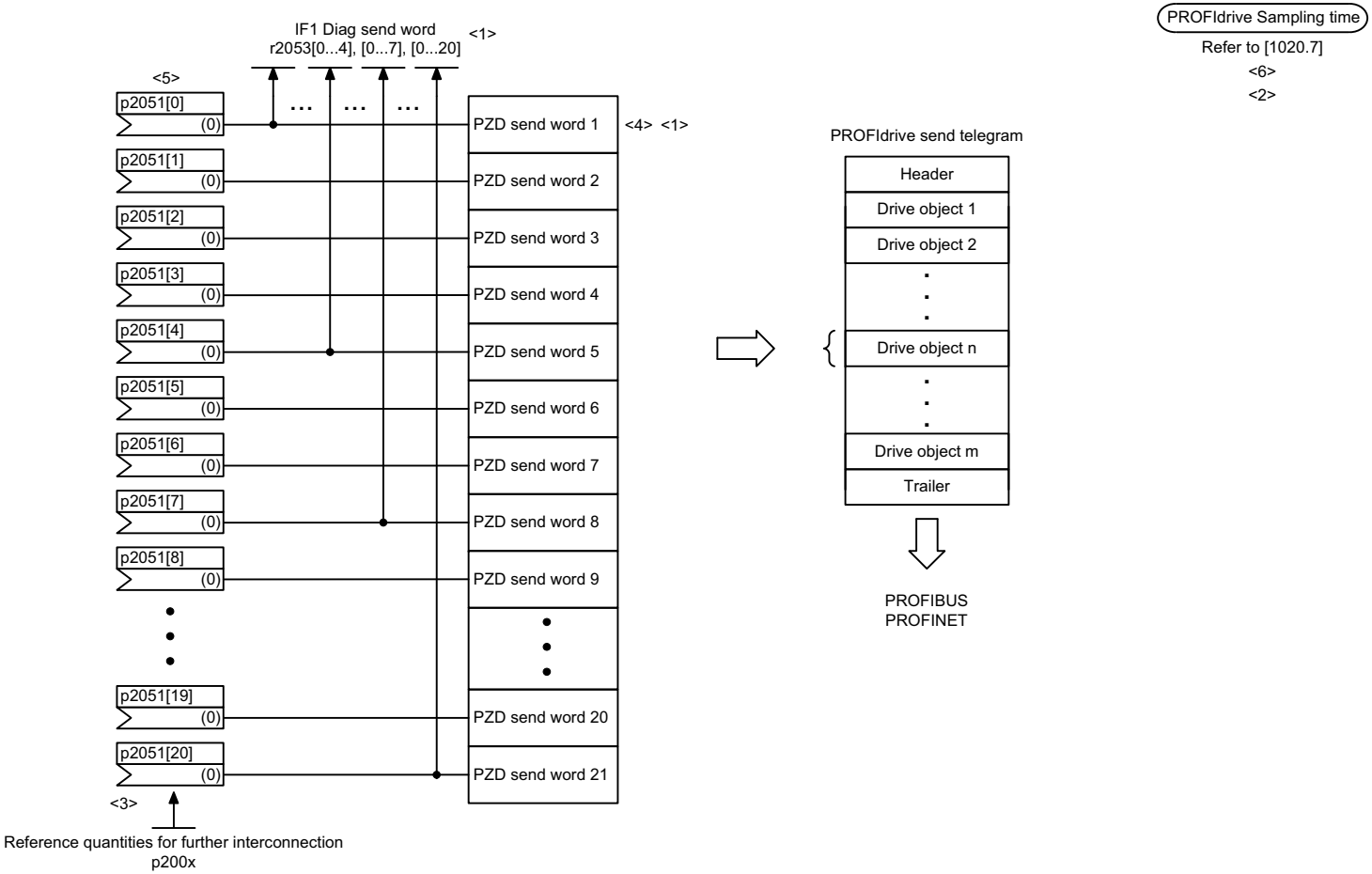

<1> The number of PZD receive words depends on the drive object type.
<2> TM15DI_DO, TM120 not for G130/G150.
<3> The following representation applies for words: 4000 hex = 100 %.
The reference variables p200x apply for the ongoing interconnection (100 % -> p200x).
The following applies for temperature values: 100 °C -> 100 % = 4000 hex; 0 °C -> 0 %.
<4> In order to maintain the PROFIdrive profile, send word 1 must be used as status word 1 (ZSW1) for A_INF, B_INF, S_INF and CU_S.
<5> Using the binector/connector converters at [2472], bits of 4 send words can be interconnected with any binectors.
<6> A_INF and S_INF not for G130/G150.

1	2	3	4	5	6	7	8
DO: A_INF, B_INF, CU_G, CU_S, S_INF, TB30, TM15DI_DO, TM31, TM120					fp_2483_54_eng.vsd	Function diagram	- 2483 -
PROFIdrive - IF1 send telegram, free interconnection via BICO (p0922 = 999)					21.01.11 V04.05.00	S120/S150/G130/G150	

Fig. 2-55 2483 – IF1 send telegram, free interconnection via BICO (p0922 = 999)

© Siemens AG 2012 All Rights Reserved

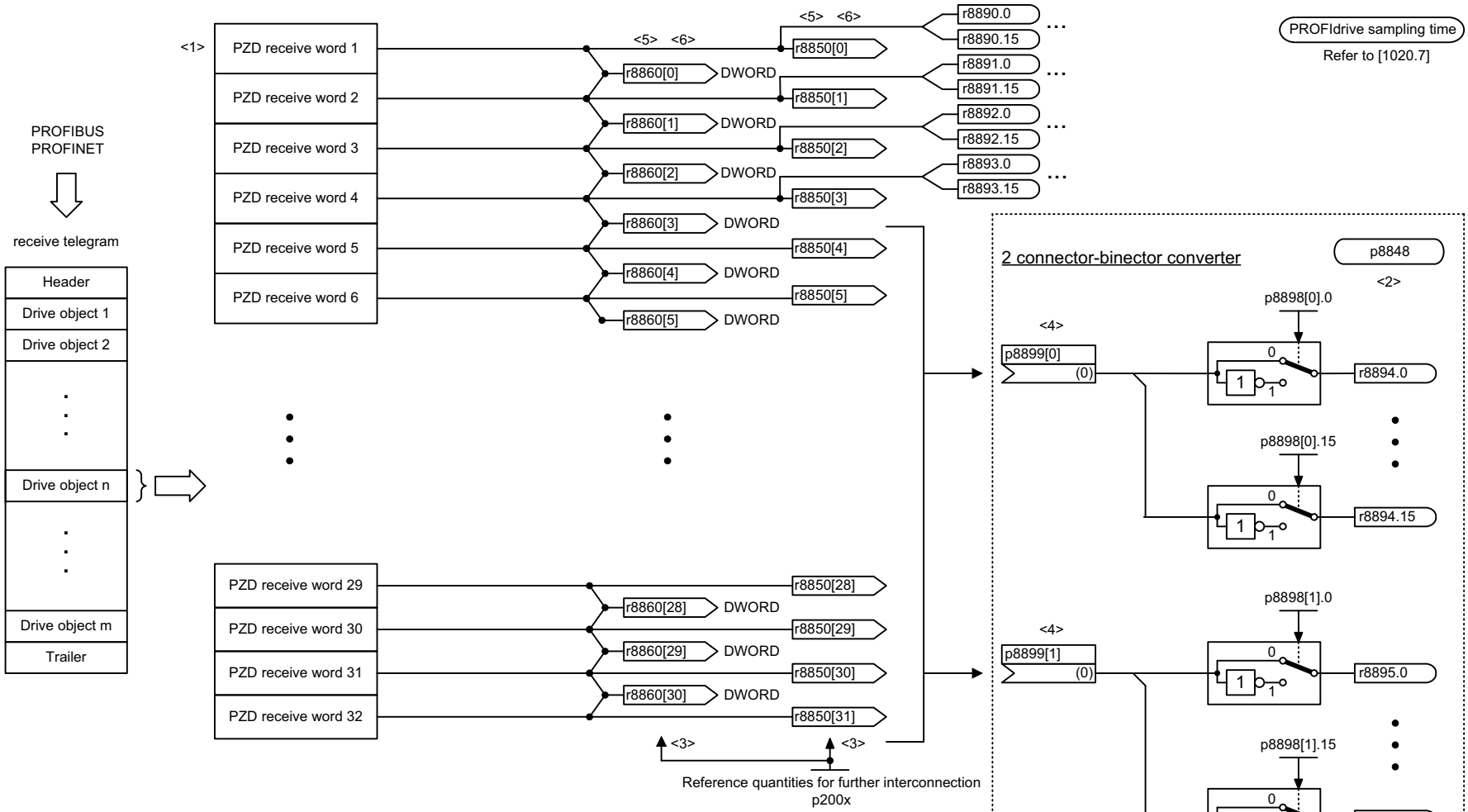

<1> The number of PZD receive words depends on the drive object type.
<2> The connector-binector converter only converts the lower 16 bits irrespective of the input variable.
<3> The following representation applies for words: 4000 hex = 100 % for double words 40000 0000 hex = 100 %.
The reference variables p200x apply for the ongoing interconnection (100 % -> p200x).
The following applies for temperature values: 100 °C -> 100 % = 4000 hex or 40000 0000 hex; 0 °C -> 0 %.
<4> Using the connector-binector converters, the bits can be extracted from two of the PZD receive words 5 to 16 and used as binectors.
<5> Every PZD word can be assigned a word or a double word. Only one of the 2 interconnection parameters r8850 or r8860 can have a value ≠ 0 for a PZD word.
<6> When interconnecting a connector output multiple times all the connector inputs must have either Integer or FloatingPoint data type.

1	2	3	4	5	6	7	8
DO: ENC, SERVO, TM41, VECTOR					fp_2485_54_eng.vsd	Function diagram	- 2485 -
PROFIdrive - IF2 receive telegram, free interconnection					11.05.11 V04.05.00	S120/S150/G130/G150	

Fig. 2-56 2485 – IF2 receive telegram, free interconnection via BICO

© Siemens AG 2012 All Rights Reserved

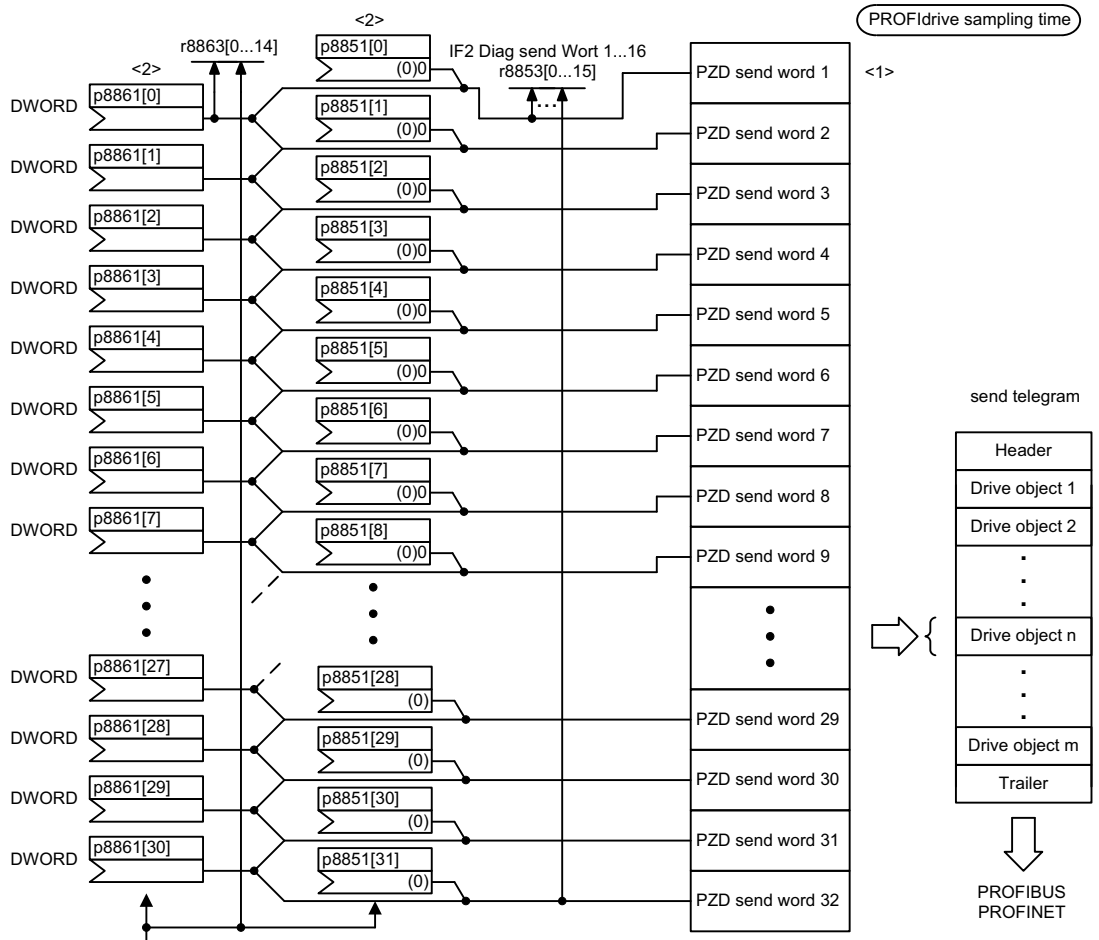

<1> The number of PZD send words depends on the drive object type.
<2> A PZD send word can either be supplied via connector input p8851[x] (WORD) or via p8861[x] (DWORD).
The two corresponding connector inputs cannot be interconnected.
<3> Physical word and double word values are inserted in the telegram as referenced variables. p200x apply as reference variables (telegram contents = 4000 hex or 4000 0000 hex in the case of double words, if the input variable has the value p200x).
The following applies for temperature values: 100 °C -> 100 % = 4000 hex;
0 °C -> 0% = 4000 0000 hex.

1	2	3	4	5	6	7	8
DO: ENC, SERVO, TM41, VECTOR					fp_2487_54_eng.vsd	Function diagram	- 2487 -
PROFIdrive - IF2 send telegram, free interconnection					11.05.11 V04.05.00	S120/S150/G130/G150	

Fig. 2-57 2487 – IF2 send telegram, free interconnection

© Siemens AG 2012 All Rights Reserved

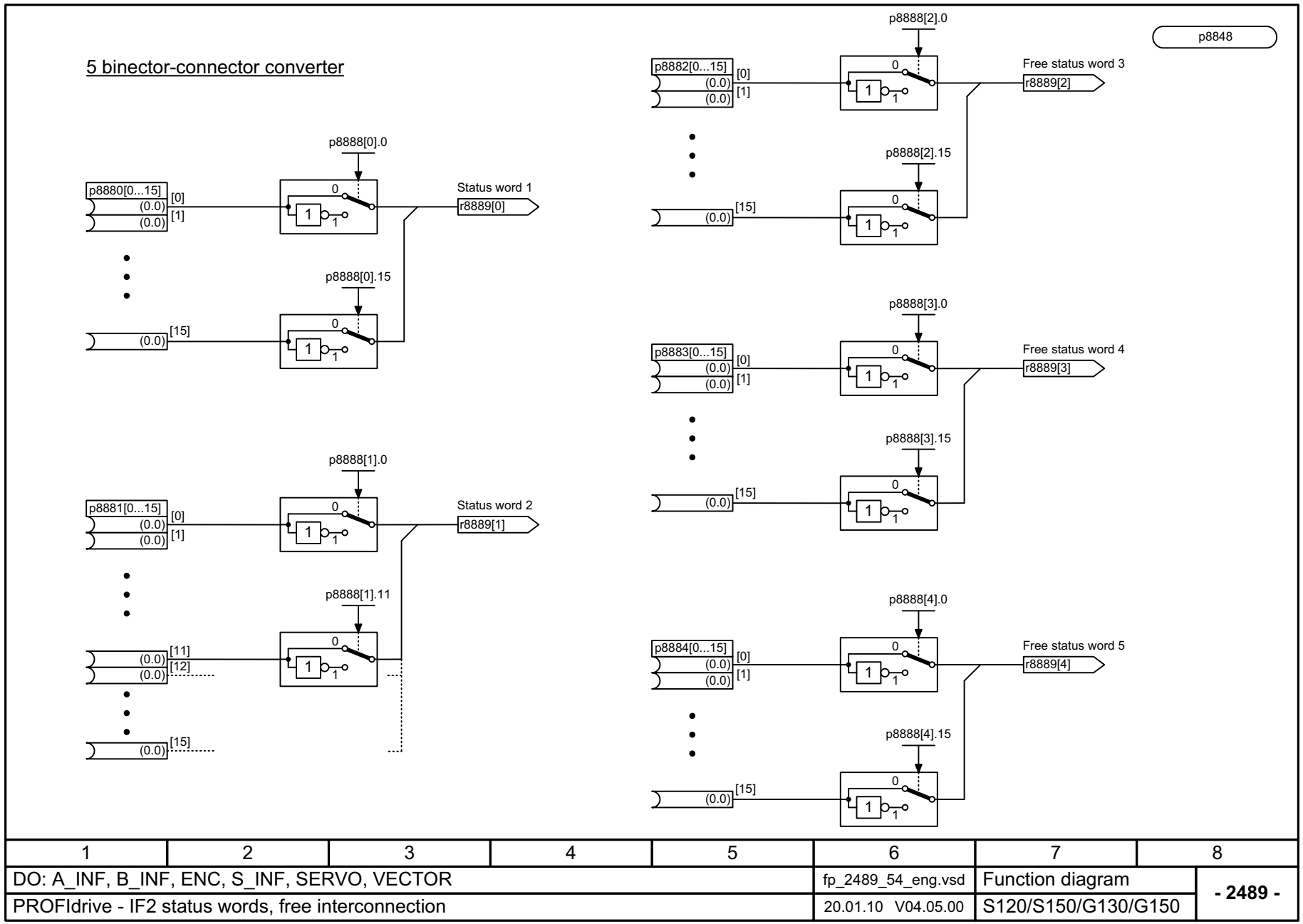

Fig. 2-58 2489 – IF2 status words, free interconnection

1	2	3	4	5	6	7	8
DO: A_INF, B_INF, ENC, S_INF, SERVO, VECTOR					fp_2489_54_eng.vsd	Function diagram	- 2489 -
PROFIdrive - IF2 status words, free interconnection					20.01.10 V04.05.00	S120/S150/G130/G150	

© Siemens AG 2012 All Rights Reserved

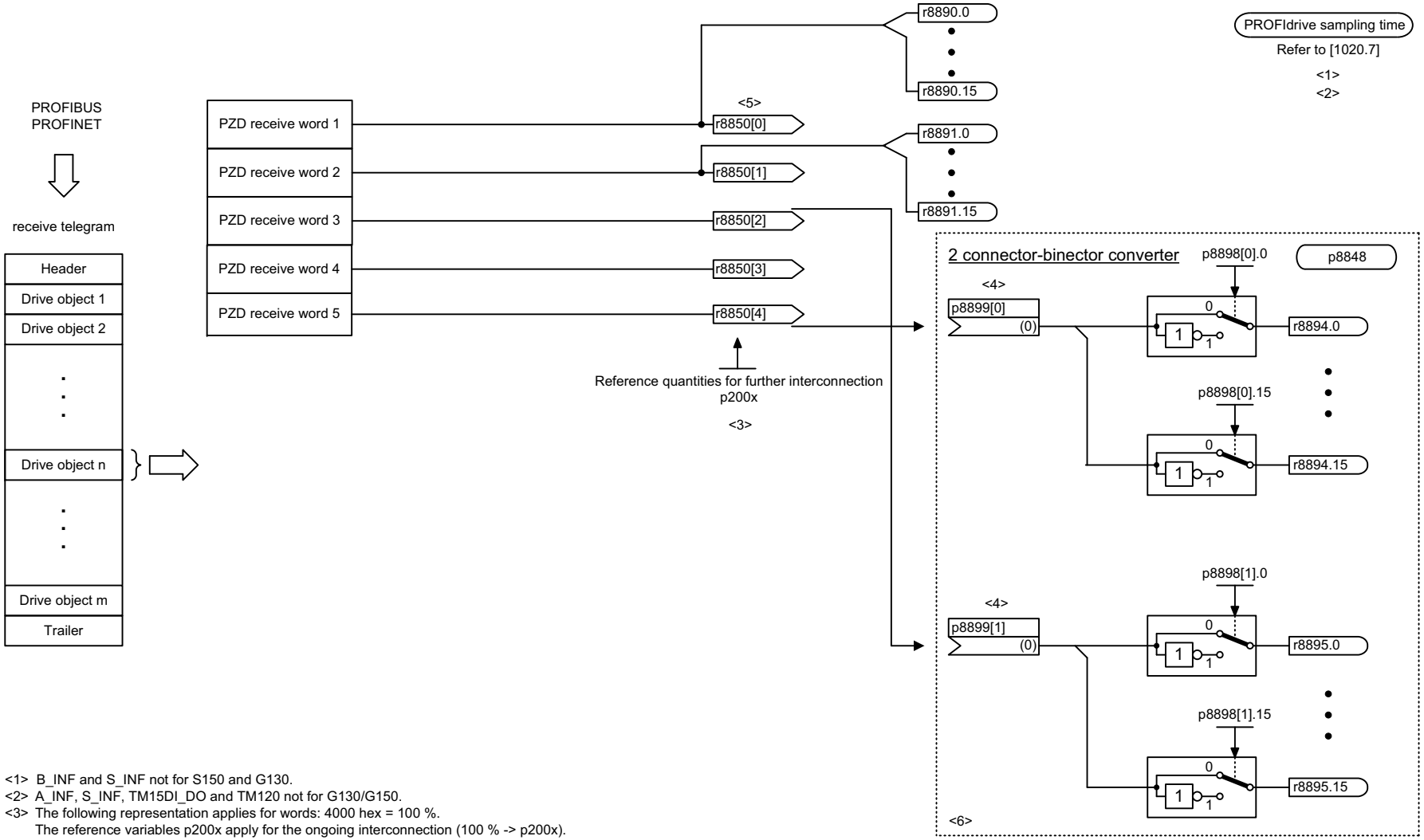

<1> B_INF and S_INF not for S150 and G130.
<2> A_INF, S_INF, TM15DI_DO and TM120 not for G130/G150.
<3> The following representation applies for words: 4000 hex = 100 %.
The reference variables p200x apply for the ongoing interconnection (100 % -> p200x).
The following applies for temperature values: 100 °C -> 100 % = 4000 hex; 0 °C -> 0 %.
<4> Using the two connector-binector converters, two of the PZD receive words 3 to 5 can be converted into binectors for continued interconnection.
<5> When interconnecting a connector output multiple times all the connector inputs must have either Integer or FloatingPoint data type.
<6> Not for TB30, TM15DI_DO, TM31 and TM120.

1	2	3	4	5	6	7	8
DO: A_INF, B_INF, CU_G, CU_S, S_INF, TB30, TM15DI_DO, TM31, TM120					fp_2491_54_eng.vsd	Function diagram	- 2491 -
PROFIdrive - IF2 receive telegram, free interconnection					11.05.10 V04.05.00	S120/S150/G130/G150	

Fig. 2-59 2491 – IF2 receive telegram, free interconnection

© Siemens AG 2012 All Rights Reserved

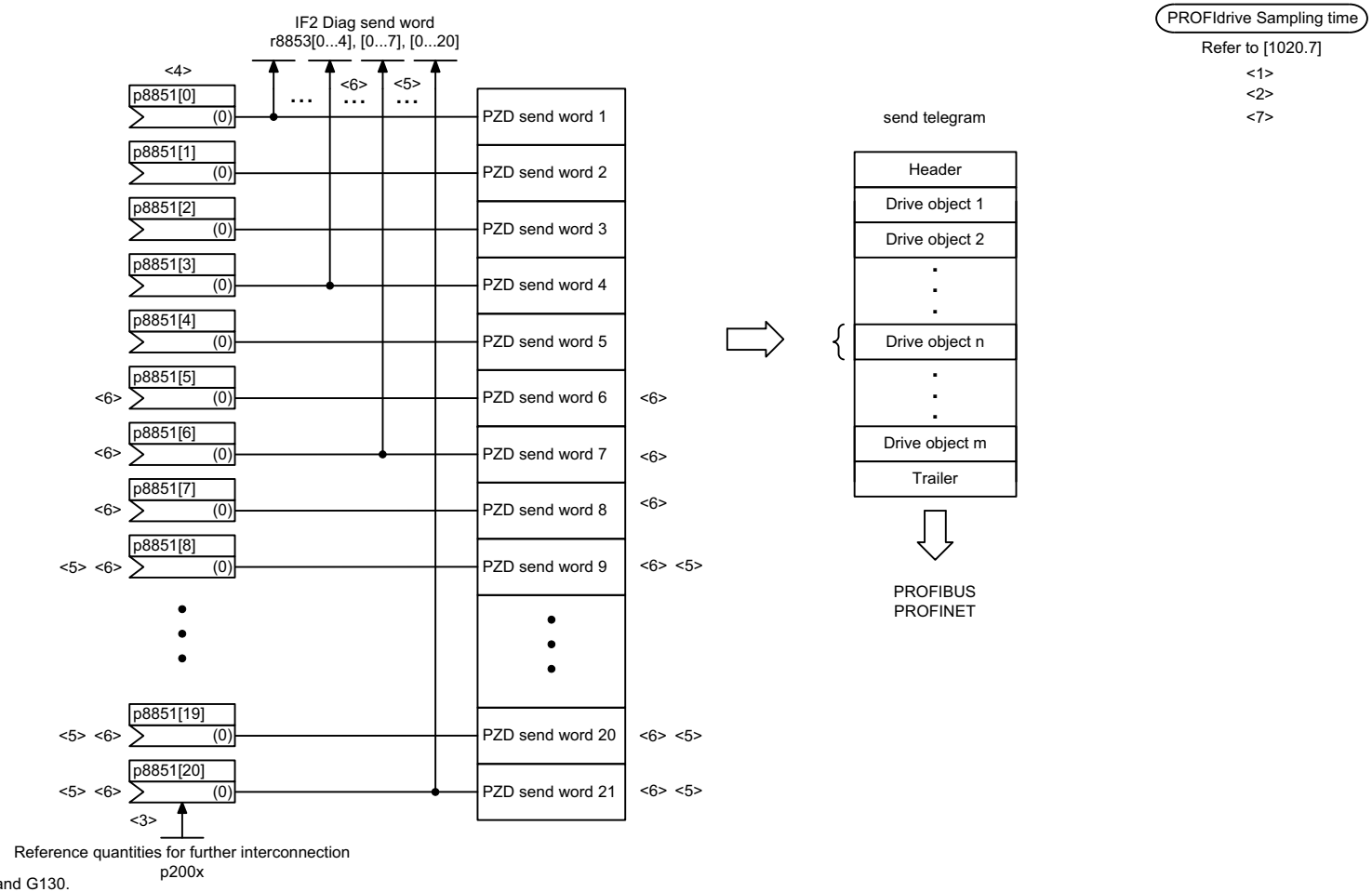

<1> B_INF and S_INF not for S150 and G130.
<2> A_INF and S_INF not for G130/G150.
<3> The following representation applies for words: 4000 hex = 100 %.
The reference variables p200x apply for the ongoing interconnection (100 % -> p200x).
The following applies for temperature values: 100 °C -> 100 % = 4000 hex; 0 °C -> 0 %.
<4> Using the binector/connector converters at [2472], bits of 4 send words can be interconnected with any binectors.
<5> Only for CU_S and CU_G
<6> Not for TB30, TM15DI_DO, TM31 and TM120.
<7> TM15DI_DO and TM120 not for G130/G150.

1	2	3	4	5	6	7	8
DO: A_INF, B_INF, CU_G, CU_S, S_INF,TB30, TM15DI_DO, TM31, TM120					fp_2493_54_eng.vsd	Function diagram	- 2493 -
PROFIdrive - IF2 send telegram, free interconnection					11.05.11 V04.05.00	S120/S150/G130/G150	

Fig. 2-60 2493 – IF2 send telegram, free interconnection

© Siemens AG 2012 All Rights Reserved

PROFIdrive sampling time
Refer to [1020.7]

Signal targets for CU_STW1

<1>

Signal	Meaning	Interconnection parameters	[Function diagram] internal control word	[Function diagram] signal target	Inverted
CU_STW1.0	**Central measuring probe, synchronizing signal source**	p0681[0] = r2090.0	-	-	-
CU_STW1.1	**RTC real time synchronization PING**	p3104 = r2090.1	-	-	-
CU_STW1.2	**ESR-Trigger** <2>	p0890.0 = r2090.2	-	-	-
CU_STW1.3	**Reserved**	-	-	-	-
CU_STW1.4	**Reserved**	-	-	-	-
CU_STW1.5	**Reserved**	-	-	-	-
CU_STW1.6	**Reserved**	-	-	-	-
CU_STW1.7	**1. Acknowledge faults**	p2103[0] = r2090.7	-	-	-
CU_STW1.8	**Reserved**	-	-	-	-
CU_STW1.9	**Reserved**	-	-	-	-
CU_STW1.10	**Control via PLC**	p3116 = r2090.10	-	-	-
CU_STW1.11	**Reserved**	-	-	-	-
CU_STW1.12	**Master sign-of-life bit 0**	p2045 =r2050[0]	-	-	-
CU_STW1.13	**Master sign-of-life bit 1**				
CU_STW1.14	**Master sign-of-life bit 2**				
CU_STW1.15	**Master sign-of-life bit 3**				

<1> Used in telegrams 390 to 394.
<2> Only available when the function module "extended setpoint channel" is active (r0108.9 = 1).

1	2	3	4	5	6	7	8
DO: CU_G, CU_S					fp_2495_54_eng.vsd	Function diagram	- 2495 -
PROFIdrive - CU_STW1 control word 1 Control Unit interconnection					07.12.10 V04.05.00	S120/S150/G130/G150	

Fig. 2-61 2495 – CU_STW1 control word 1, Control Unit interconnection

© Siemens AG 2012 All Rights Reserved

PROFIdrive sampling time
Refer to [1020.7]

Signal sources for CU_ZSW1

<1>

Signal	Meaning	Interconnection parameters	[Function diagram] Internal status word	[Function diagram] signal source	Inverted <2>
CU_ZSW1.0	**Reserved**	-	-	-	-
CU_ZSW1.1	**Reserved**	-	-	-	-
CU_ZSW1.2	**Reserved**	-	-	-	-
CU_ZSW1.3	**1 = Fault present**	p2081[3] = r2139.3	-	-	-
CU_ZSW1.4	**Reserved**	-	-	-	-
CU_ZSW1.5	**Reserved**	-	-	-	-
CU_ZSW1.6	**Reserved**	-	-	-	-
CU_ZSW1.7	**1 = Alarm present**	p2081[7] = r2139.7	-	-	-
CU_ZSW1.8	**1 = System time synchronized (SYNC)**	p2081[8] = r0899.8	-	-	-
CU_ZSW1.9	**1 = No alarm present**	p2081[9] = r3114.9	-	-	✔
CU_ZSW1.10	**1 = No fault present**	p2081[10] = r3114.10	-	-	✔
CU_ZSW1.11	**1 = No safety message present**	p2081[11] = r3114.11	-	-	✔
CU_ZSW1.12	**Slave sign-of-life bit 0**	Implicitly interconnected	-	-	-
CU_ZSW1.13	**Slave sign-of-life bit 1**				
CU_ZSW1.14	**Slave sign-of-life bit 2**				
CU_ZSW1.15	**Slave sign-of-life bit 3**				

<1> Used in telegrams 390 to 394.

<2> The ZSW1 is generated using the binector-connector converter (BI: p2080[0...15], inversion: p2088[0].0...p2088[0].15)

1	2	3	4	5	6	7	8
DO: CU_G, CU_S					fp_2496_54_eng.vsd	Function diagram	- 2496 -
PROFIdrive - CU_ZSW1 status word 1 Control Unit interconnection					07.12.10 V04.05.00	S120/S150/G130/G150	

Fig. 2-62 2496 – CU_ZSW1 status word 1, Control Unit interconnection

© Siemens AG 2012 All Rights Reserved

PROFIdrive sampling time
Refer to [1020.7]

Signal targets for A_DIGITAL <1>

Signal	Meaning	Interconnection parameters <3>	[Function diagram] internal status word	[Function diagram] signal target	Inverted
A_DIGITAL.0	**Digital output 8 (DI/DO 8)** <2>	p0738 = r2091.0	-	-	-
A_DIGITAL.1	**Digital output 9 (DI/DO 9)** <2>	p0739 = r2091.1	-	-	-
A_DIGITAL.2	**Digital output 10 (DI/DO 10)** <2>	p0740 = r2091.2	-	-	-
A_DIGITAL.3	**Digital output 11 (DI/DO 11)** <2>	p0741 = r2091.3	-	-	-
A_DIGITAL.4	**Digital output 12 (DI/DO 12)** <2>	p0742 = r2091.4	-	-	-
A_DIGITAL.5	**Digital output 13 (DI/DO 13)** <2>	p0743 = r2091.5	-	-	-
A_DIGITAL.6	**Digital output 14 (DI/DO 14)** <2>	p0744 = r2091.6	-	-	-
A_DIGITAL.7	**Digital output 15 (DI/DO 15)** <2>	p0745 = r2091.7	-	-	-
A_DIGITAL.8	**Reserved**	-	-	-	-
A_DIGITAL.9	**Reserved**	-	-	-	-
A_DIGITAL.10	**Reserved**	-	-	-	-
A_DIGITAL.11	**Reserved**	-	-	-	-
A_DIGITAL.12	**Reserved**	-	-	-	-
A_DIGITAL.13	**Reserved**	-	-	-	-
A_DIGITAL.14	**Reserved**	-	-	-	-
A_DIGITAL.15	**Reserved**	-	-	-	-

<1> Used in telegrams 390 to 396.
<2> Can be set via p0728 as input (DI) or output (DO).
<3> Pre-assignment, can be freely changed.

1	2	3	4	5	6	7	8
DO: CU_G, CU_S					fp_2497_54_eng.vsd	Function diagram	- 2497 -
PROFIdrive - A_DIGITAL interconnection					20.09.11 V04.05.00	S120/S150/G130/G150	

Fig. 2-63 2497 – A_DIGITAL interconnection

© Siemens AG 2012 All Rights Reserved

PROFIdrive sampling time
Refer to [1020.7]

Signal targets for E_DIGITAL <1>

Signal	Meaning		Interconnection parameters<3>	[Function diagram] Internal status word	[Function diagram] signal target	Inverted
E_DIGITAL.0	**Digital input 8 (DI/DO 8)**	<2>	p2081[0] = r0722.8	-	-	-
E_DIGITAL.1	**Digital input 9 (DI/DO 9)**	<2>	p2081[1] = r0722.9	-	-	-
E_DIGITAL.2	**Digital input 10 (DI/DO 10)**	<2>	p2081[2] = r0722.10	-	-	-
E_DIGITAL.3	**Digital input 11 (DI/DO 11)**	<2>	p2081[3] = r0722.11	-	-	-
E_DIGITAL.4	**Digital input 12 (DI/DO 12)**	<2>	p2081[4] = r0722.12	-	-	-
E_DIGITAL.5	**Digital input 13 (DI/DO 13)**	<2>	p2081[5] = r0722.13	-	-	-
E_DIGITAL.6	**Digital input 14 (DI/DO 14)**	<2>	p2081[6] = r0722.14	-	-	-
E_DIGITAL.7	**Digital input 15 (DI/DO 15)**	<2>	p2081[7] = r0722.15	-	-	-
E_DIGITAL.8	**Digital input 0 (DI 0)**		p2081[8] = r0722.0	-	-	-
E_DIGITAL.9	**Digital input 1 (DI 1)**		p2081[9] = r0722.1	-	-	-
E_DIGITAL.10	**Digital input 2 (DI 2)**		p2081[10] = r0722.2	-	-	-
E_DIGITAL.11	**Digital input 3 (DI 3)**		p2081[11] = r0722.3	-	-	-
E_DIGITAL.12	**Digital input 4 (DI 4)**	<4>	p2081[12] = r0722.4	-	-	-
E_DIGITAL.13	**Digital input 5 (DI 5)**	<4>	p2081[13] = r0722.5	-	-	-
E_DIGITAL.14	**Digital input 6 (DI 6)**	<4>	p2081[14] = r0722.6	-	-	-
E_DIGITAL.15	**Digital input 7 (DI 7)**	<4>	p2081[15] = r0722.7	-	-	-

<1> Used in telegrams 390 to 396. <2> Can be set via p0728 as input (DI) or output (DO). <3> Pre-assignment, can be freely changed. <4> Only for CU320-2.

1	2	3	4	5	6	7	8
DO: CU_G, CU_S					fp_2498_54_eng.vsd	Function diagram	- 2498 -
PROFIdrive - E_DIGITAL interconnection					20.09.11 V04.05.00	S120/S150/G130/G150	

Fig. 2-64 2498 – E_DIGITAL interconnection

© Siemens AG 2012 All Rights Reserved

PROFIdrive sampling time
Refer to [1020.7]

Signal targets for A_DIGITAL_1 <1>

Signal	Meaning	Interconnection parameters <2>	[Function diagram] internal status word	[Function diagram] signal target	Inverted
A_DIGITAL_1.0	**Reserved**	-	-	-	-
A_DIGITAL_1.1	**Reserved**	-	-	-	-
A_DIGITAL_1.2	**Reserved**	-	-	-	-
A_DIGITAL_1.3	**Reserved**	-	-	-	-
A_DIGITAL_1.4	**Reserved**	-	-	-	-
A_DIGITAL_1.5	**Reserved**	-	-	-	-
A_DIGITAL_1.6	**Reserved**	-	-	-	-
A_DIGITAL_1.7	**Reserved**	-	-	-	-
A_DIGITAL_1.8	**Digital output 16 (DI/DO 16)** <3>	p0746 = r2092.8	-	-	-
A_DIGITAL_1.9	**Reserved**	-	-	-	-
A_DIGITAL_1.10	**Reserved**	-	-	-	-
A_DIGITAL_1.11	**Reserved**	-	-	-	-
A_DIGITAL_1.12	**Reserved**	-	-	-	-
A_DIGITAL_1.13	**Reserved**	-	-	-	-
A_DIGITAL_1.14	**Reserved**	-	-	-	-
A_DIGITAL_1.15	**Reserved**	-	-	-	-

<1> Used in telegrams 393 to 396. <2> Pre-assignment, can be freely changed. <3> Only for CU_S_AC or CU_I_D410..

Fig. 2-65 2499 – A_DIGITAL_1 interconnection

© Siemens AG 2012 All Rights Reserved

PROFIdrive sampling time
Refer to [1020.7]

Signal targets for E_DIGITAL_1 <1>

Signal	Meaning	Interconnection parameters<3>	[Function diagram] Internal status word	[Function diagram] signal target	Inverted
E_DIGITAL_1.0	**Reserved**	-	-	-	-
E_DIGITAL_1.1	**Reserved**	-	-	-	-
E_DIGITAL_1.2	**Reserved**	-	-	-	-
E_DIGITAL_1.3	**Reserved**	-	-	-	-
E_DIGITAL_1.4	**Reserved**	-	-	-	-
E_DIGITAL_1.5	**Reserved**	-	-	-	-
E_DIGITAL_1.6	**Reserved**	-	-	-	-
E_DIGITAL_1.7	**Reserved**	-	-	-	-
E_DIGITAL_1.8	**Digital input 16 (DI 16)**	p2083[8] = r0722.16	-	-	-
E_DIGITAL_1.9	**Digital input 17 (DI 17)**	p2083[9] = r0722.17	-	-	-
E_DIGITAL_1.10	**Digital input 18 (DI 18)** <2>	p2083[10] = r0722.18	-	-	-
E_DIGITAL_1.11	**Digital input 19 (DI 19)** <2>	p2083[11] = r0722.19	-	-	-
E_DIGITAL_1.12	**Digital input 20 (DI 20)**	p2083[12] = r0722.20	-	-	-
E_DIGITAL_1.13	**Digital input 21 (DI 21)**	p2083[13] = r0722.21	-	-	-
E_DIGITAL_1.14	**Digital input 22 (DI 22)** <2>	p2083[14] = r0722.22	-	-	-
E_DIGITAL_1.15	**Reserved**	-	-	-	-

<1> Used in telegrams 393 to 396. <2> Not for CU320-2. <3> Pre-assignment, can be freely changed.

Fig. 2-66 2500 – E_DIGITAL_1 interconnection

© Siemens AG 2012 All Rights Reserved

2.7 Internal control/status words

Function diagrams

2501 – Control word, sequence control	2-1053
2503 – Status word, sequence control	2-1054
2505 – Control word, setpoint channel	2-1055
2520 – Control word, speed controller	2-1056
2522 – Status word, speed controller	2-1057
2526 – Status word, closed-loop control	2-1058
2530 – Status word, current control	2-1059
2534 – Status word, monitoring functions 1	2-1060
2536 – Status word, monitoring functions 2	2-1061
2537 – Status word, monitoring functions 3	2-1062
2546 – Control word, faults/alarms	2-1063
2548 – Status word, faults/alarms 1 and 2	2-1064

© Siemens AG 2012 All Rights Reserved

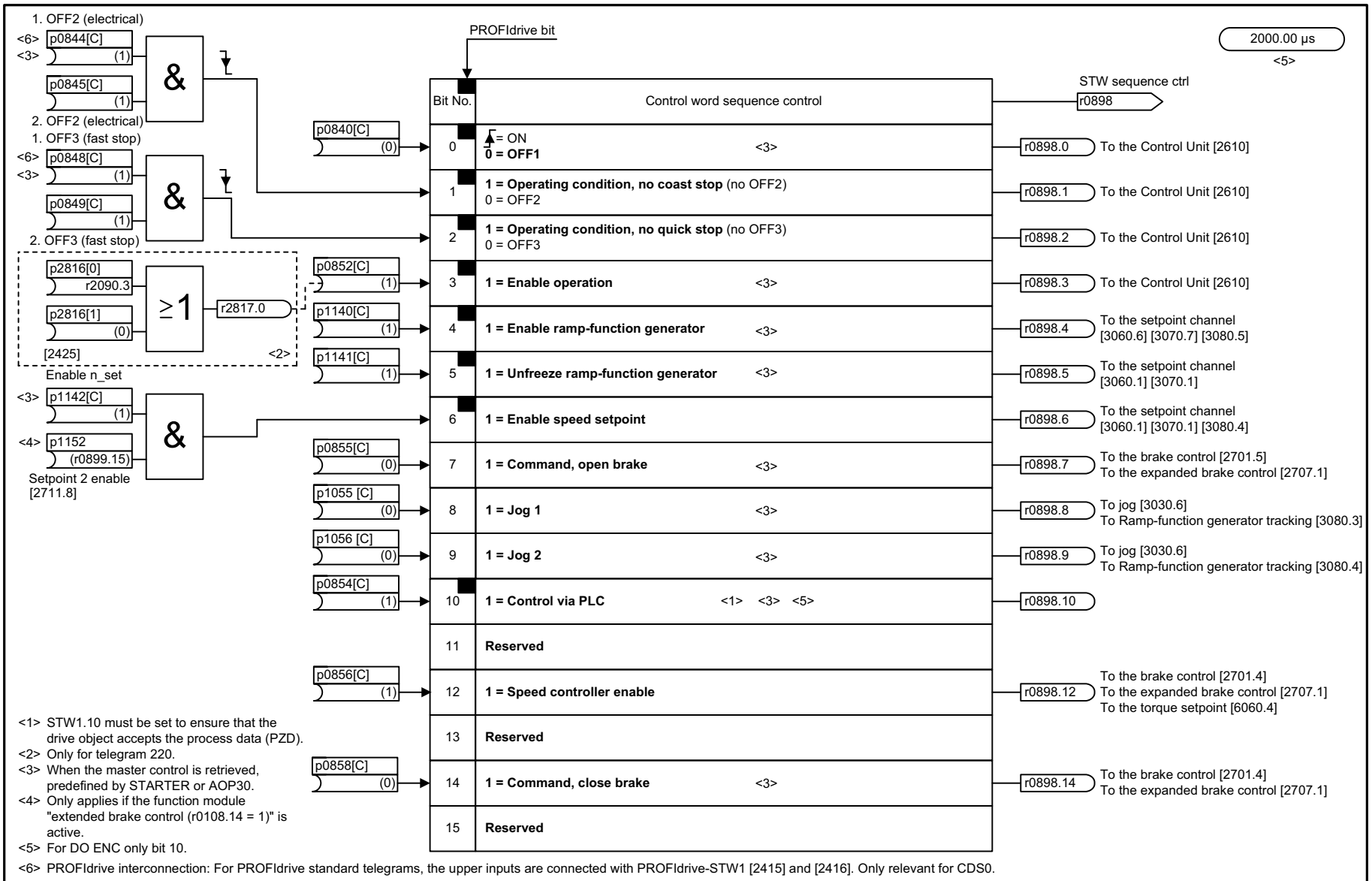

1	2	3	4	5	6	7	8
DO: ENC, SERVO, VECTOR					fp_2501_54_eng.vsd	Function diagram	- 2501 -
Internal control/status words - Control word, sequence control					24.11.11 V04.05.00	S120/S150/G130/G150	

Fig. 2-67 2501 – Control word, sequence control

© Siemens AG 2012 All Rights Reserved

Fig. 2-68 2503 – Status word, sequence control

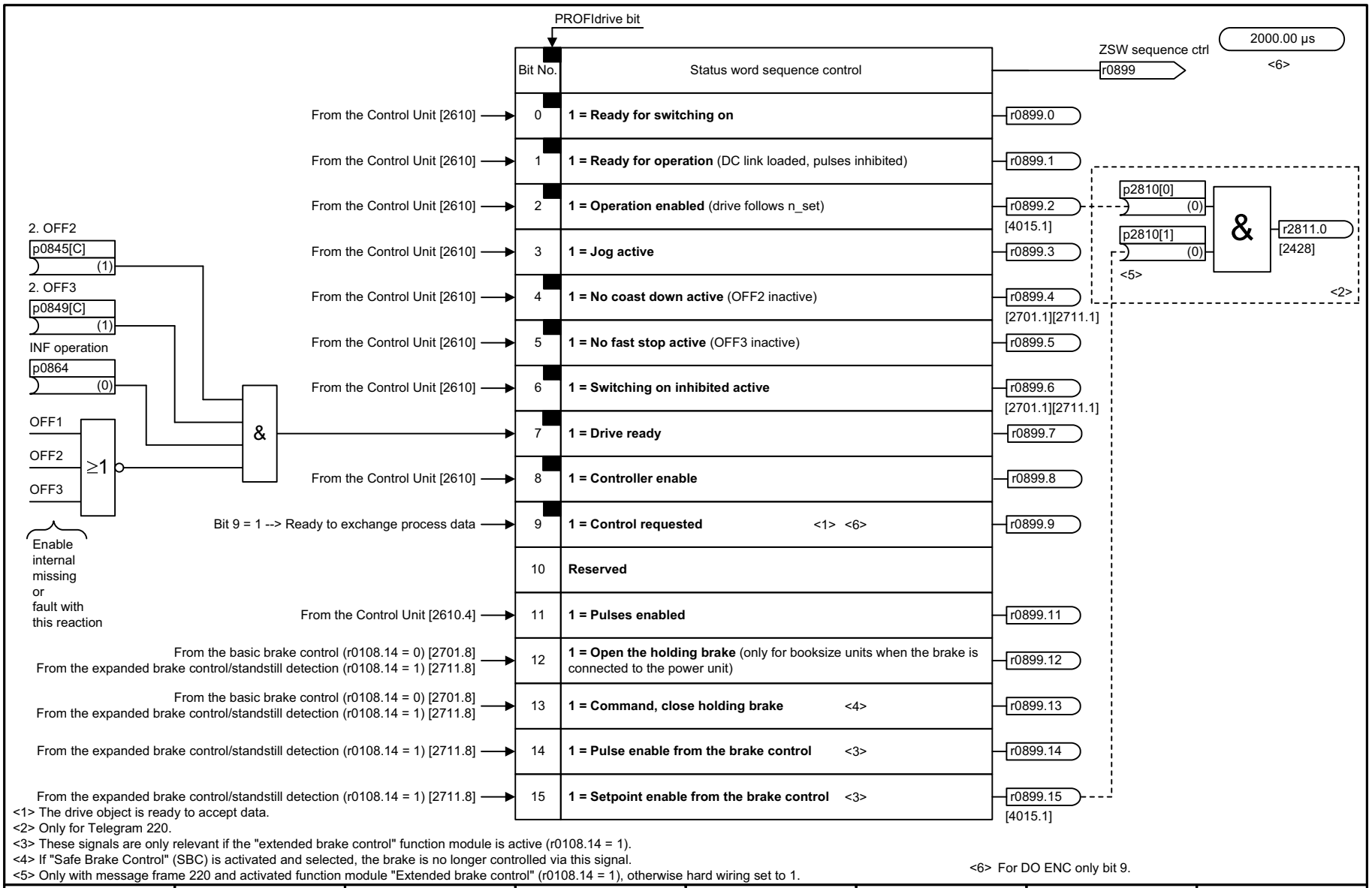

<1> The drive object is ready to accept data.
<2> Only for Telegram 220.
<3> These signals are only relevant if the "extended brake control" function module is active (r0108.14 = 1).
<4> If "Safe Brake Control" (SBC) is activated and selected, the brake is no longer controlled via this signal.
<5> Only with message frame 220 and activated function module "Extended brake control" (r0108.14 = 1), otherwise hard wiring set to 1.

<6> For DO ENC only bit 9.

1	2	3	4	5	6	7	8
DO: ENC, SERVO, VECTOR					fp_2503_54_eng.vsd	Function diagram	- 2503 -
Internal control/status words - Status word, sequence control					24.11.11 V04.05.00	S120/S150/G130/G150	

© Siemens AG 2012 All Rights Reserved
SINAMICS G130/G150 List Manual (LH2), 01/2012, A5E03263479A

Fig. 2-69 2505 – Control word, setpoint channel

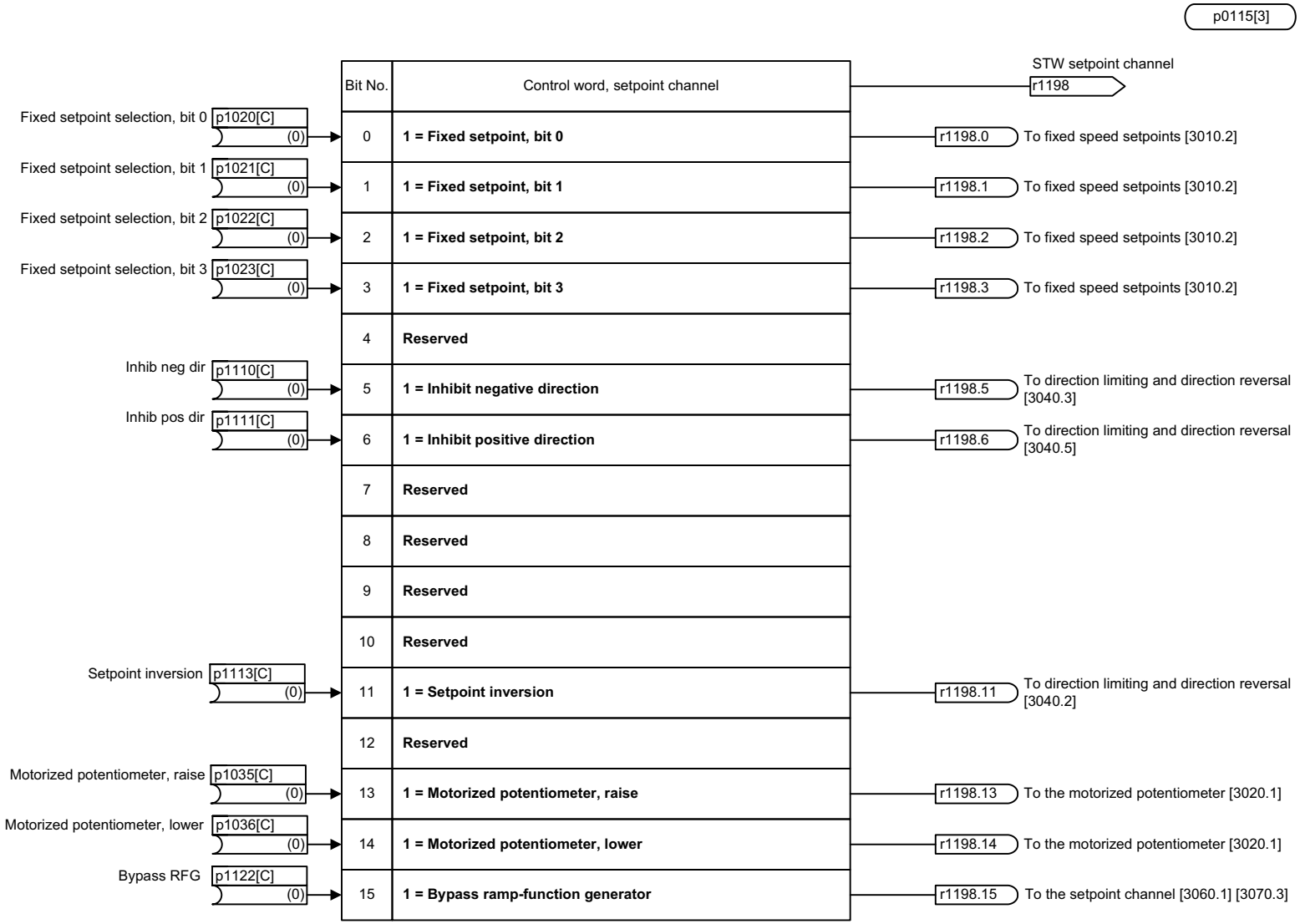

1	2	3	4	5	6	7	8
DO: SERVO, VECTOR, VECTORGL, VECTORMV					fp_2505_51_eng.vsd	Function diagram	- 2505 -
Internal control/status words - Control word, setpoint channel					20.06.08 V04.05.00	SINAMICS	

© Siemens AG 2012 All Rights Reserved

p0115[1] (Motor Modules)
1000.00 µs

STW n_ctrl r1406 <1> <2>

Bit No.	Control word, speed controller	Servo <1> <2>	Vector	
0	**Reserved**	-	-	
1	**Reserved**	-	-	
2	**Reserved**	-	-	
3	**Reserved**	-	-	
4	**1 = speed controller, hold I component**	-	✔	r1406.4 To the speed controller [6040.4]
5	**1 = speed controller, set I component**	-	✔	r1406.5 To the speed controller [6040.4]
6	**Reserved**	-	-	
7	**Reserved**	-	-	
8	**1 = Travel to fixed stop** <2>	✔	✔	r1406.8 To torque signals, Motor locked/stalled [8012.5] <2>
9	**Reserved**	-	-	
10	**Reserved**	-	-	
11	**1 = Droop enable**	-	✔	r1406.11 To the speed setpoint, droop [6030.1]
12	**1 = Closed-loop torque control active**	✔	✔	r1406.12 To the closed-loop speed control [5060.1 and 6060.1] <2>
13	**Reserved**	-	-	
14	**Reserved**	-	-	
15	**Set speed adaptation controller I component**	-	✔	r1406.15

n_ctrl integ stop p1476[C] (0) → Bit 4
n_ctrl integ set p1477[C] (0) → Bit 5
TfS activation <2> p1545[C] (0) → Bit 8
Enables droop p1492[C] (0) → Bit 11
Changeov n/M_ctrl p1501[C] (0) → Bit 12

<1> Only for Servo.
<2> Only for SINAMICS S120.

1	2	3	4	5	6	7	8
DO: SERVO, VECTOR					fp_2520_54_eng.vsd	Function diagram	- 2520 -
Internal control/status words - Control word, speed controller					27.02.08 V04.05.00	S120/S150/G130/G150	

Fig. 2-70 2520 – Control word, speed controller

© Siemens AG 2012 All Rights Reserved

Fig. 2-71 2522 – Status word, speed controller

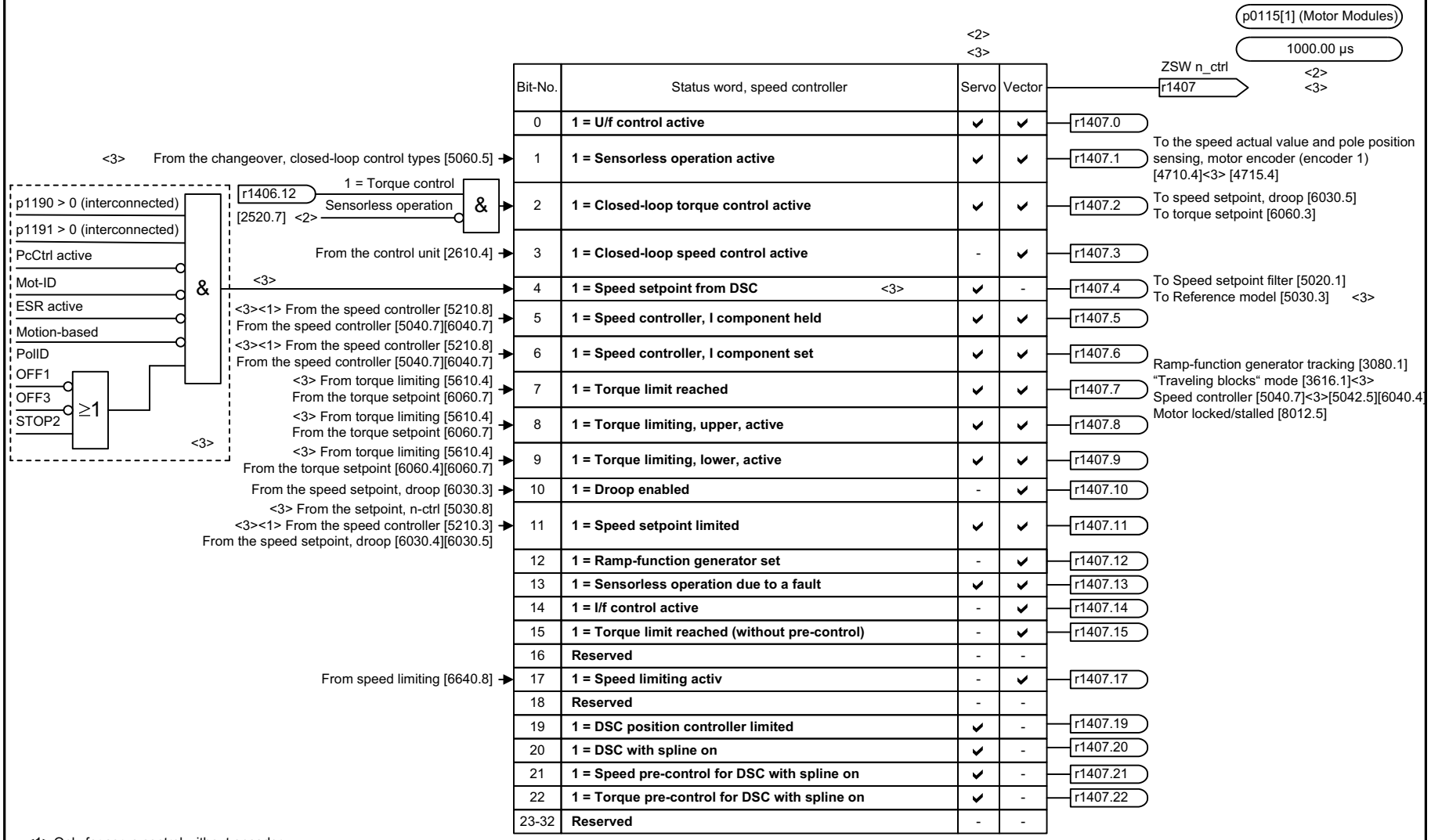

Bit-No.	Status word, speed controller	Servo	Vector	
0	**1 = U/f control active**	✔	✔	r1407.0
1	**1 = Sensorless operation active**	✔	✔	r1407.1
2	**1 = Closed-loop torque control active**	✔	✔	r1407.2
3	**1 = Closed-loop speed control active**	-	✔	r1407.3
4	**1 = Speed setpoint from DSC** <3>	✔	-	r1407.4
5	**1 = Speed controller, I component held**	✔	✔	r1407.5
6	**1 = Speed controller, I component set**	✔	✔	r1407.6
7	**1 = Torque limit reached**	✔	✔	r1407.7
8	**1 = Torque limiting, upper, active**	✔	✔	r1407.8
9	**1 = Torque limiting, lower, active**	✔	✔	r1407.9
10	**1 = Droop enabled**	-	✔	r1407.10
11	**1 = Speed setpoint limited**	✔	✔	r1407.11
12	**1 = Ramp-function generator set**	-	✔	r1407.12
13	**1 = Sensorless operation due to a fault**	✔	✔	r1407.13
14	**1 = I/f control active**	-	✔	r1407.14
15	**1 = Torque limit reached (without pre-control)**	-	✔	r1407.15
16	**Reserved**	-	-	
17	**1 = Speed limiting activ**	-	✔	r1407.17
18	**Reserved**	-	-	
19	**1 = DSC position controller limited**	✔	-	r1407.19
20	**1 = DSC with spline on**	✔	-	r1407.20
21	**1 = Speed pre-control for DSC with spline on**	✔	-	r1407.21
22	**1 = Torque pre-control for DSC with spline on**	✔	-	r1407.22
23-32	**Reserved**	-	-	

<1> Only for servo control without encoder.
<2> Only for SERVO.
<3> Only for SINAMICS S120.

1	2	3	4	5	6	7	8
DO: SERVO, VECTOR					fp_2522_54_eng.vsd	Function diagram	- 2522 -
Internal control/status words - Status word, speed controller					14.11.11 V04.05.00	S120/S150/G130/G150	

© Siemens AG 2012 All Rights Reserved

Status word closed-loop control

p0115[1] (Motor Modules)
Refer to [1020.7]

ZSW closed-loop control: r0056

	Bit No.	Meaning		
	0	**1 = Initialization completed** <2>	r0056.0	
	1	**1 = De-magnetization completed**	r0056.1	
	2	**1 = Pulses enabled** <2>	r0056.2	
	3	**1 = Soft starting available** <1> <2>	r0056.3	
<3> [6722.6][6725.6]	4	**1 = Magnetization completed**	r0056.4	[2701.1][2707.1]
	5	**Reserved**	r0056.5	
	6	**1 = Acceleration voltage active** <1> <2>	r0056.6	
<3> [6725.4][6730.5] <3> [6731.5][6732.4]	7	**1 = Frequency, negative** <2>	r0056.7	[6710.5]
<3> [6722.3][6725.4]	8	**1 = Field weakening active**	r0056.8	
[6714.8]	9	**1 = Voltage limit active** <2>	r0056.9	
[6310.8]	10	**1 = Slip limiting active** <1> <2>	r0056.10	
<3> [6730.5][6731.5][6732.4]	11	**1 = Frequency limit active** <2>	r0056.11	<3> [8018.1]
	12	**1 = Current limiting controller, voltage output active** <1> <2>	r0056.12	[8012.5]
[6060.7]	13	**1 = Current/torque limiting active** <1> <2>	r0056.13	
[6220.8][6320.8]	14	**1 = Vdc_max controller active**	r0056.14	[6031.6][6710.2]
[6220.8][6320.8]	15	**1 = Vdc_min controller active**	r0056.15	[6031.6][6710.2]

<1> Only for U/f control.
<2> Not for SERVO.
<3> Only for SINAMICS S120.

1	2	3	4	5	6	7	8
DO: SERVO, VECTOR					fp_2526_54_eng.vsd	Function diagram	- 2526 -
Internal control/status words - Status word, closed-loop control					04.08.11 V04.05.00	S120/S150/G130/G150	

Fig. 2-72 2526 – Status word, closed-loop control

© Siemens AG 2012 All Rights Reserved

Status word closed-loop current control

p0115[0] (Motor Modules)
Refer to [1020.7]

ZSW closed-loop current control: r1408

	Bit No.	Meaning		
	0	**1 = Closed-loop current control active**		
[6714.5]	1	**1 = Lim. I comp. Id-R active**	<2>	r1408.1
	2	**Reserved**		
[6714.7]	3	**1 = Limiting U active**	<2>	r1408.3
	4	**1 = Limiting Ud active**	<1> <3>	r1408.4
	5	**1 = Limiting Uq active**	<1> <3>	r1408.5 [5040.7][5042.5]
	6	**1 = Pos. limit. Iq active**	<1> <3>	r1408.6 [5714.5] <3>
	7	**1 = Neg. limit. Iq active**	<1> <3>	r1408.7 [5714.4] <3>
	8	**1 = Iq setpoint limit. active**	<1> <3>	r1408.8 [5714.4] <3>
	9	**1 = Id setpoint limit. active**	<1> <3>	r1408.9 [5722.7] <3>
[6730.3]	10	**1 = Lim. EMF/Obs-ctrl. active**	<2>	r1408.10
	11	**1 = Error EMF/Obs-N active**	<2>	r1408.11
	12	**1 = Motor stalled active**	<2>	r1408.12
	13	**Reserved**		
	14	**Reserved**		
	15	**Reserved**		

<1> Only for SERVO.
<2> Only for VECTOR.
<3> Only for SINAMICS S120.

1	2	3	4	5	6	7	8
DO: SERVO, VECTOR					fp_2530_54_eng.vsd	Function diagram	- 2530 -
Internal control/status words - Status word, current control					24.10.08 V04.05.00	S120/S150/G130/G150	

Fig. 2-73 2530 – Status word, current control

© Siemens AG 2012 All Rights Reserved

p0115[3]

ZSW monitoring functions 1 r2197

Bit No.	Status word, monitoring functions 1		
0	**Reserved**		
1	**|n_act| <= speed threshold value 2** (p2155)	<1>	r2197.1
2	**|n_act| > speed threshold value 2** (p2155)	<1>	r2197.2
3	**1 = n_act >= 0**		r2197.3
4	**Reserved**		
5	**Reserved**		
6	**n_act > n_max**		r2197.6
7	**1 = Speed setpoint - actual value deviation within tolerance t_off**		r2197.7
8	**Reserved**		
9	**Reserved**		
10	**Reserved**		
11	**Reserved**		
12	**Reserved**		
13	**Reserved**		
14	**Reserved**		
15	**Reserved**		

From speed signals 1 [8010.8] → 1
From speed signals 1 [8010.8] → 2
1 → 2
From speed signals 2 [8011.8] → 3
From speed signals 1 [8010.6] → 6
From speed signals 2 [8011.8] → 7

<1> n_{act} = smoothed speed actual value r2169 [8010.2].

1	2	3	4	5	6	7	8
DO: SERVO, VECTOR, VECTORGL, VECTORMV, VECTORSL					fp_2534_51_eng.vsd	Function diagram	- 2534 -
Internal control/status words - Status word, monitoring functions 1					08.07.09 V04.05.00	SINAMICS	

Fig. 2-74 2534 – Status word, monitoring functions 1

© Siemens AG 2012 All Rights Reserved

p0115[3] (4000.00 µs)

ZSW monitoring functions 2 — r2198

	Bit No.	Status word, monitoring functions 2	
	0	**Reserved**	
	1	**Reserved**	
	2	**Reserved**	
	3	**Reserved**	
<1> From speed signals 2 [8011.8]	4	**1 = |n_set| < p2161**	r2198.4
<1> From speed signals 2 [8011.8]	5	**1 = n_set ≥ 0**	r2198.5
From torque messages, motor locked/stalled [8012.8]	6	**1 = Motor blocked**	r2198.6
From torque messages, motor locked/stalled [8012.8]	7	**1 = Motor stalled**	r2198.7
	8	**Reserved**	
	9	**Reserved**	
From torque messages, motor locked/stalled [8012.3]	10	**1 = Torque setpoint < torque threshold value 1 (p2174)**	r2198.10
From load monitoring [8013.8]	11	**1 = Load monitoring signals an alarm**	r2198.11
From load monitoring [8013.8]	12	**1 = Load monitoring signals a fault**	r2198.12
	13	**Reserved**	
	14	**Reserved**	
	15	**Reserved**	

<1> Only relevant if the function module "extended signals/ monitoring functions" (r0108.17 = 1) is active.

1	2	3	4	5	6	7	8
DO: SERVO, VECTOR					fp_2536_54_eng.vsd	Function diagram	- 2536 -
Internal control/status words - Status word, monitoring functions 2					04.11.09 V04.05.00	S120/S150/G130/G150	

Fig. 2-75 2536 – Status word, monitoring functions 2

© Siemens AG 2012 All Rights Reserved

P0115[4]

PROFIdrive bit

ZSW monitoring functions 3 r2199

	Bit No.	Status word, monitoring functions 3	
From speed signals 1 [8010.8]	0	**1 = |n_act| < speed threshold value 3** (p2161) <1>	r2199.0
From speed signals 1 [8010.8]	1	**1 = f or n comparison value reached or exceeded** (p2141)	r2199.1
	2	**Reserved**	
	3	**Reserved**	
From speed signals 2 [8011.8]	4	**1 = Speed setpoint - actual value deviation within tolerance t_on**	r2199.4
From speed signals 2 [8011.8]	5	**1 = Ramp-up/ramp-down completed** 0 = Ramp-function generator active	r2199.5 [8012.1]
	6	**1 = Current below residual current threshold**	r2199.6
	7	**Reserved**	
	8	**Reserved**	
	9	**Reserved**	
	10	**Reserved**	
From torque signals [8012.5]	11	**1 = Torque utilization < torque threshold value 2 (p2194)**	r2199.11
	12	**Reserved**	
	13	**Reserved**	
	14	**Reserved**	
	15	**Reserved**	

<1>n_act = smoothed speed actual value r2169 [8010.2].

1	2	3	4	5	6	7	8
DO: SERVO, VECTOR, VECTORGL, VECTORMV, VECTORSL					fp_2537_51_eng.vsd	Function diagram	- 2537 -
Internal control/status words - Status word, monitoring functions 3					29.06.09 V04.05.00	SINAMICS	

Fig. 2-76 2537 – Status word, monitoring functions 3

© Siemens AG 2012 All Rights Reserved

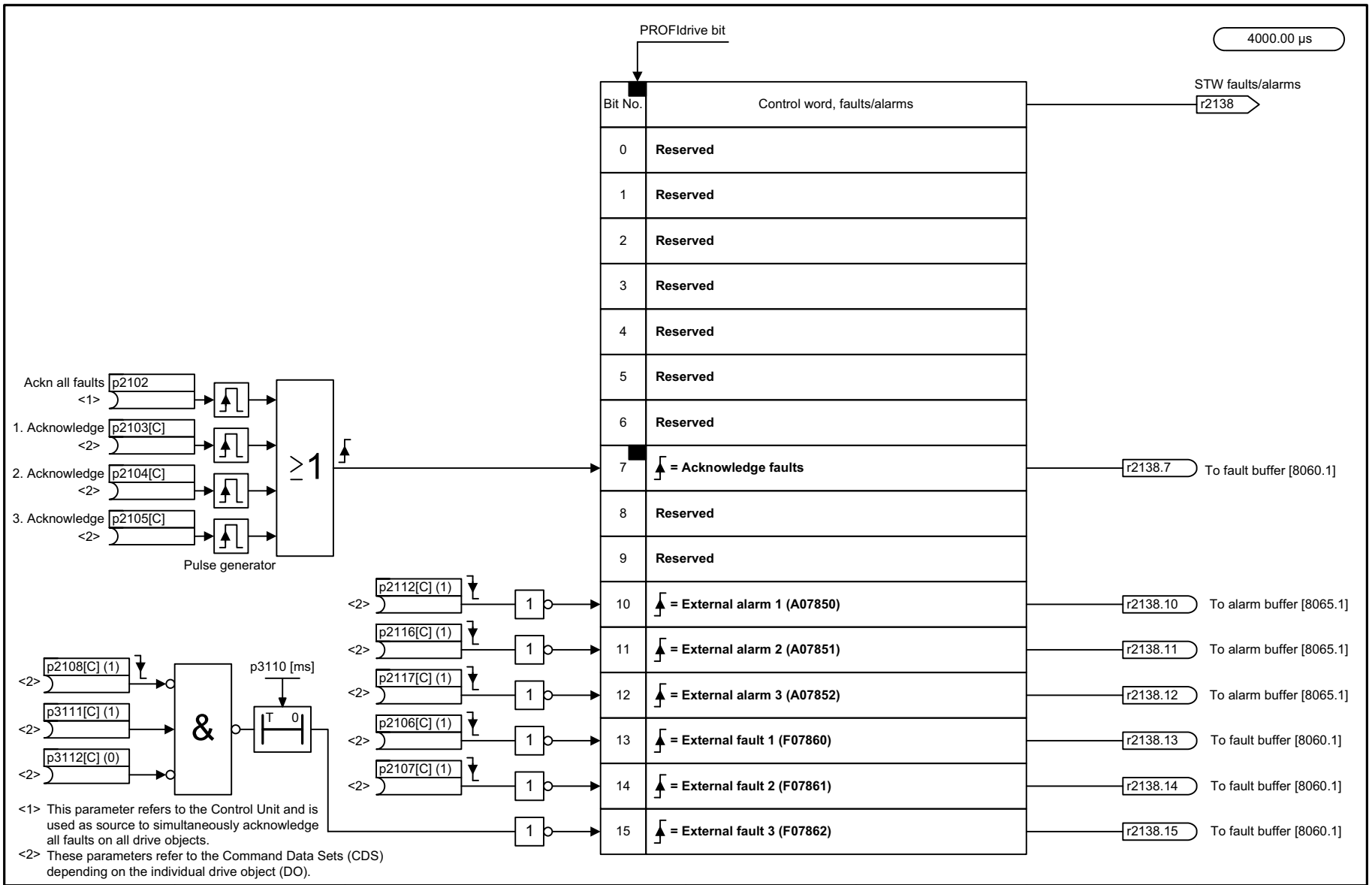

1	2	3	4	5	6	7	8
DO: All objects					fp_2546_51_eng.vsd	Function diagram	- 2546 -
Internal control/status words - Control word, faults/alarms					08.05.08 V04.05.00	SINAMICS	

Fig. 2-77 2546 – Control word, faults/alarms

© Siemens AG 2012 All Rights Reserved

Fig. 2-78 2548 – Status word, faults/alarms 1 and 2

ZSW faults/alarms 1 — r2139

Source sampling time
Refer to [1020.7]

Bit No.	Status word, faults/alarms 1	
0	1 = Acknowledgement running	r2139.0
1	1 = Acknowledgement required	r2139.1
2	Reserved	
3	1 = Fault present	r2139.3
4	Reserved	
5	1 = Safety message present	r2139.5
6	1 = Internal message 1 present	r2139.6
7	1 = Alarm present	r2139.7
8	1 = Internal message 2 present	r2139.8
9	Reserved	
10	Reserved	
11	1 = Alarm class bit 0	r2139.11
12	1 = Alarm class bit 1	r2139.12
13	Reserved	
14	Reserved	
15	Reserved	

From the fault buffer [8060.6] → Bit 3

From the alarm buffer [8065.4] → Bit 7

ZSW faults/alarms 2 — r2135

Bit No.	Status word, faults/alarms 2		
0	1 = Fault encoder 1	r2135.0	
1	1 = Fault encoder 2	r2135.1	
2	1 = Fault encoder 3	r2135.2	
3 ... 9	Reserved		
10	1 = Fault transformer overtemperature <1>	r2135.10	<1>
11	1 = Alarm transformer overtemperature <1>	r2135.11	<1>
12	1 = Fault motor overtemperature	r2135.12	
13	1 = Fault power unit thermal overload	r2135.13	
14	1 = Alarm motor overtemperature	r2135.14	
15	1 = Alarm power unit thermal overload	r2135.15	

<1> From the thermal monitoring, infeed [8770.6] [8970.6] → Bits 10, 11

From the thermal monitoring, motor [8016.8] → Bit 12

From the thermal monitoring, power module [8014.8] → Bit 13

From the thermal monitoring, motor [8016.8] → Bit 14

From the thermal monitoring, power module [8014.8] → Bit 15

<1> Only for A_INFMV, B_INFMV, VECTORMV, VECTORSL.

1	2	3	4	5	6	7	8
DO: All objects					fp_2548_51_eng.vsd	Function diagram	- 2548 -
Internal control/status words - Status word, faults/alarms 1 and 2					06.12.10 V04.05.00	SINAMICS	

© Siemens AG 2012 All Rights Reserved

2.8 Sequence control

Function diagrams

2610 – Sequencer	2-1066
2634 – Missing enable signals, line contactor control, logic operation	2-1067

© Siemens AG 2012 All Rights Reserved

Fig. 2-79 2610 – Sequencer

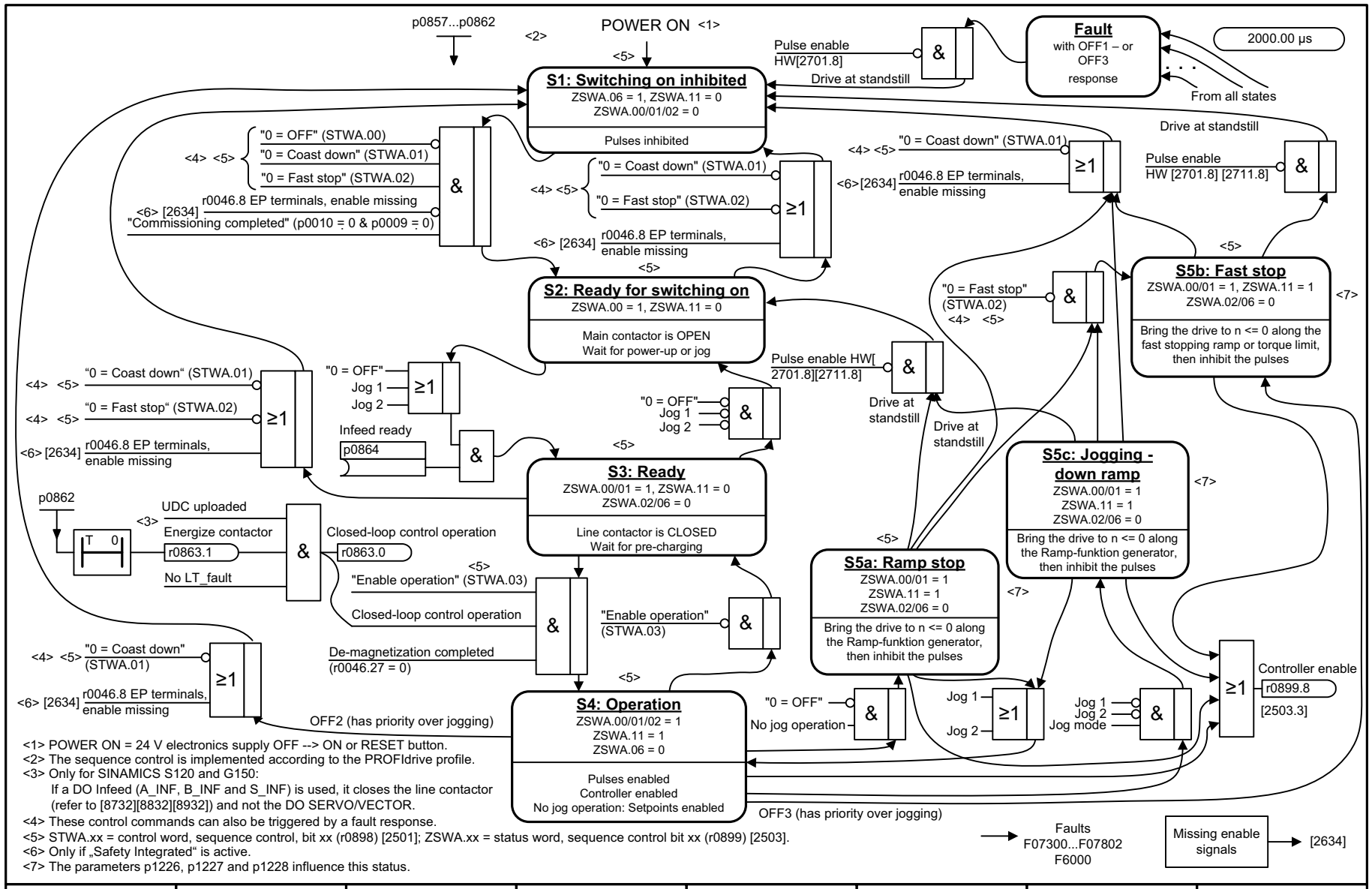

<1> POWER ON = 24 V electronics supply OFF --> ON or RESET button.
<2> The sequence control is implemented according to the PROFIdrive profile.
<3> Only for SINAMICS S120 and G150:
If a DO Infeed (A_INF, B_INF and S_INF) is used, it closes the line contactor (refer to [8732][8832][8932]) and not the DO SERVO/VECTOR.
<4> These control commands can also be triggered by a fault response.
<5> STWA.xx = control word, sequence control, bit xx (r0898) [2501]; ZSWA.xx = status word, sequence control bit xx (r0899) [2503].
<6> Only if „Safety Integrated" is active.
<7> The parameters p1226, p1227 and p1228 influence this status.

1	2	3	4	5	6	7	8
DO: SERVO, VECTOR					fp_2610_54_eng.vsd	Function diagram	- 2610 -
Sequence control - Sequencer					23.11.10 V04.05.00	S120/S150/G130/G150	

© Siemens AG 2012 All Rights Reserved

Fig. 2-80 2634 – Missing enable signals, line contactor control, logic operation

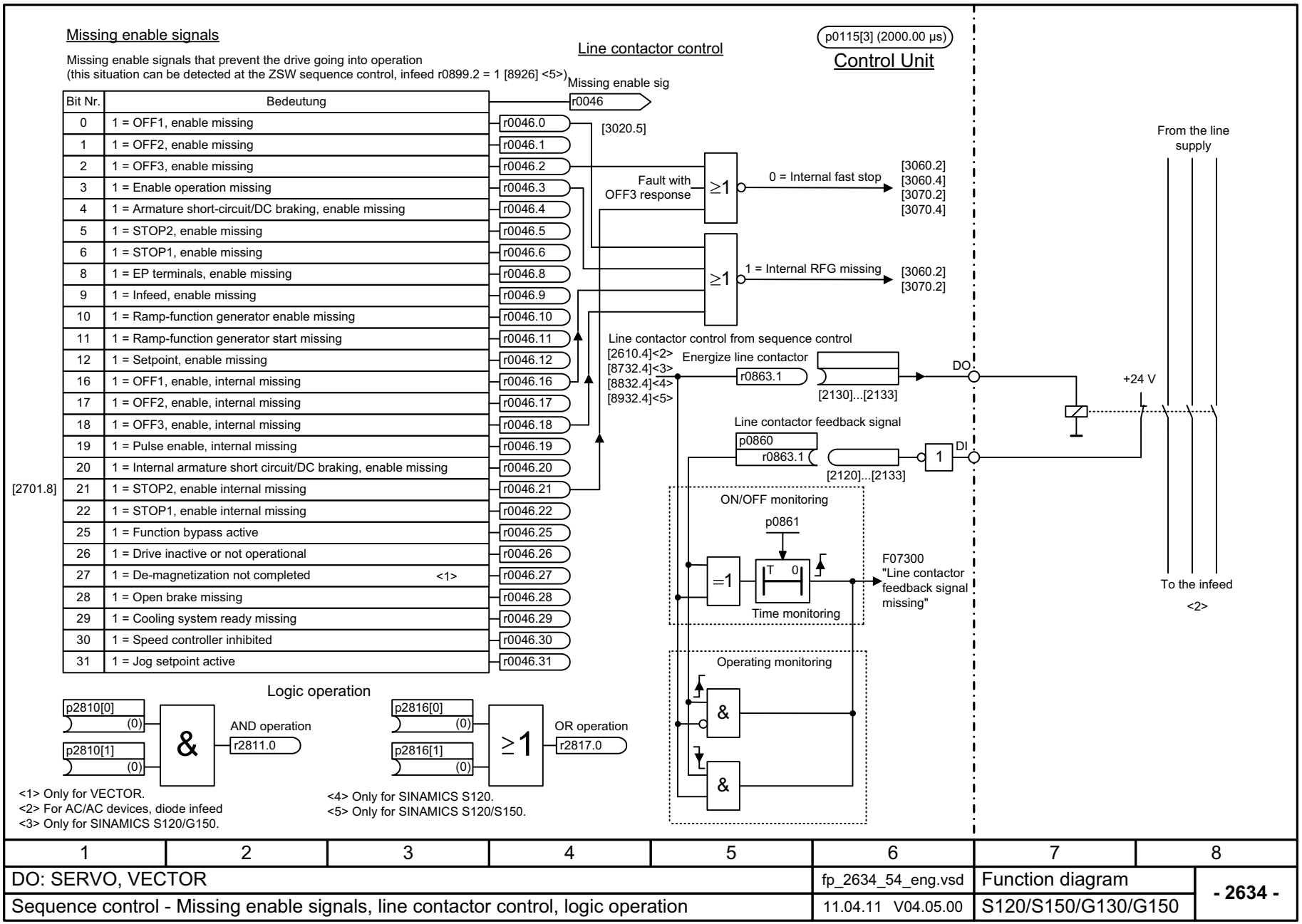

1	2	3	4	5	6	7	8
DO: SERVO, VECTOR					fp_2634_54_eng.vsd	Function diagram	- 2634 -
Sequence control - Missing enable signals, line contactor control, logic operation					11.04.11 V04.05.00	S120/S150/G130/G150	

© Siemens AG 2012 All Rights Reserved

2.9 Brake control

Function diagrams

2701 – Basic brake control (r0108.14 = 0)	2-1069
2704 – Extended brake control, zero-speed detection (r0108.14 = 1)	2-1070
2707 – Extended brake control, open/close brake (r0108.14 = 1)	2-1071
2711 – Extended brake control, signal outputs (r0108.14 = 1)	2-1072

© Siemens AG 2012 All Rights Reserved

Fig. 2-81 2701 – Basic brake control (r0108.14 = 0)

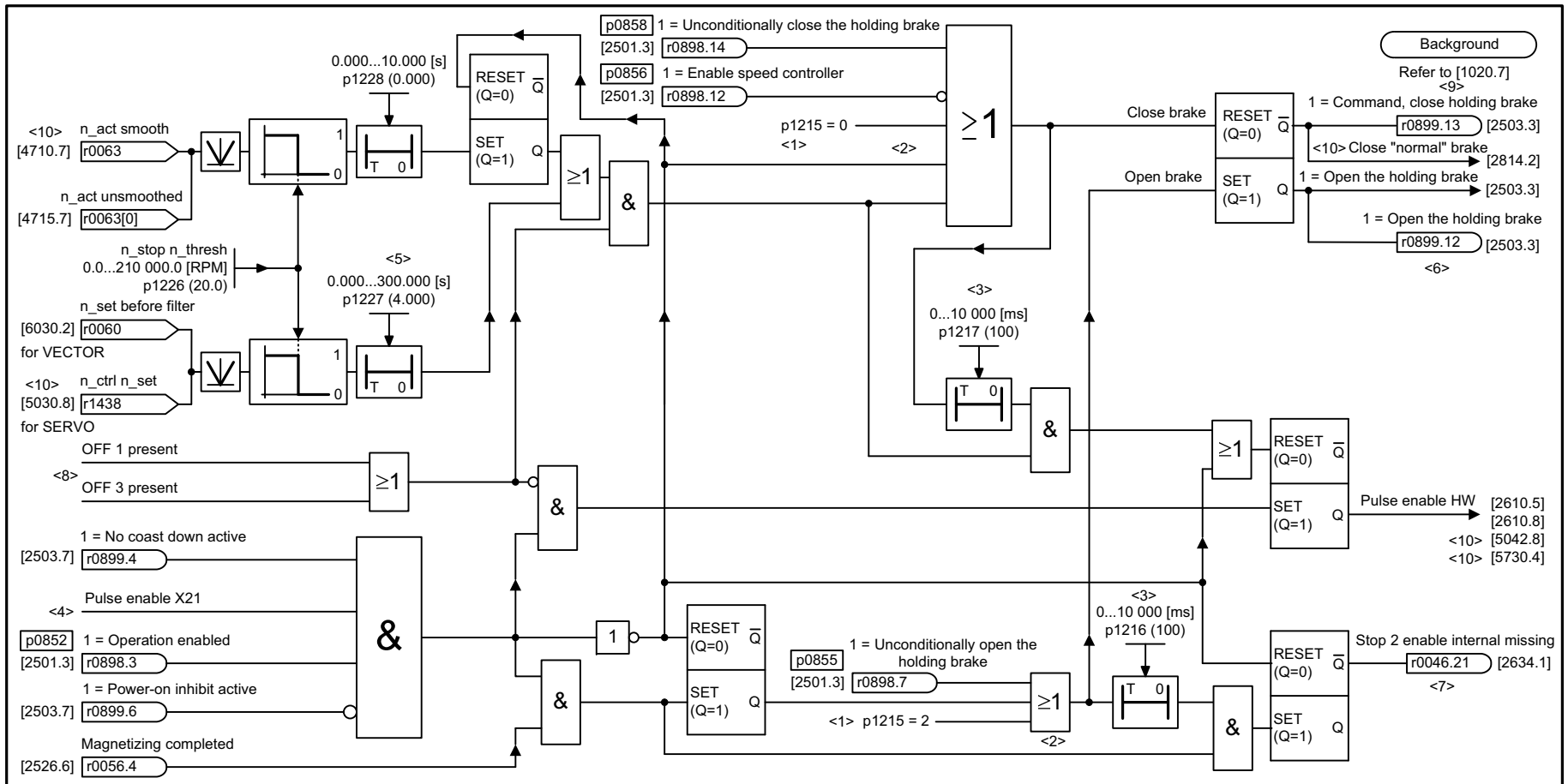

<1> Motor holding brake configuration (p1215)
0 = No motor holding brake being used.
1 = Motor holding brake acc. to sequence control.
2 = Motor holding brake always released.
3 = Motor holding brake like sequence control, connection via BICO.
<2> Priority assignment (high -> low): p1215, p0858, p0855, p0856, sequence control.
<3> If p1215 = 0, 2 -> t = 0 ms.
<4> Only if Safety Integrated is active (Double Motor Module: X22, Chassis: X41).
<5> For p1227 = 300 s, the monitoring function is deactivated.
<6> If an external motor holding brake is used, p1215 should be set to 3 and r0899.12 should be interconnected as control signal.
<7> r0046.21 = 0, as long as r0046.0 = 1 (OFF1 enable missing or power-on inhibit).
r0046.21 = 1, if p0858 = 1 or p0856 = 0.
The signal generation is shown simplified.
<8> The internal signal includes signals that lead to OFF1 or OFF3 (e. g. BICO or fault response).
<9> If the brake is permanently applied or released (p0855, p0858 or p1215), the drive does not wait while the brake is released or applied.
<10> Only for SINAMICS S120.

Note: Braking signal diagnostic evaluation (p1278) only applies for SBC (Safe Brake Control) (controls the Safe Brake Relay). <10>
Note: With VECTOR with activated "parallel circuit" Function Module (r0108.15 = 1), the holding brake may only be connected to a power unit (p7015).

1	2	3	4	5	6	7	8
DO: SERVO, VECTOR					fp_2701_54_eng.vsd	Function diagram	- 2701 -
Brake control - Basic brake control (r0108.14 = 0)					30.03.11 V04.05.00	S120/S150/G130/G150	

© Siemens AG 2012 All Rights Reserved

Fig. 2-82 2704 – Extended brake control, zero-speed detection (r0108.14 = 1)

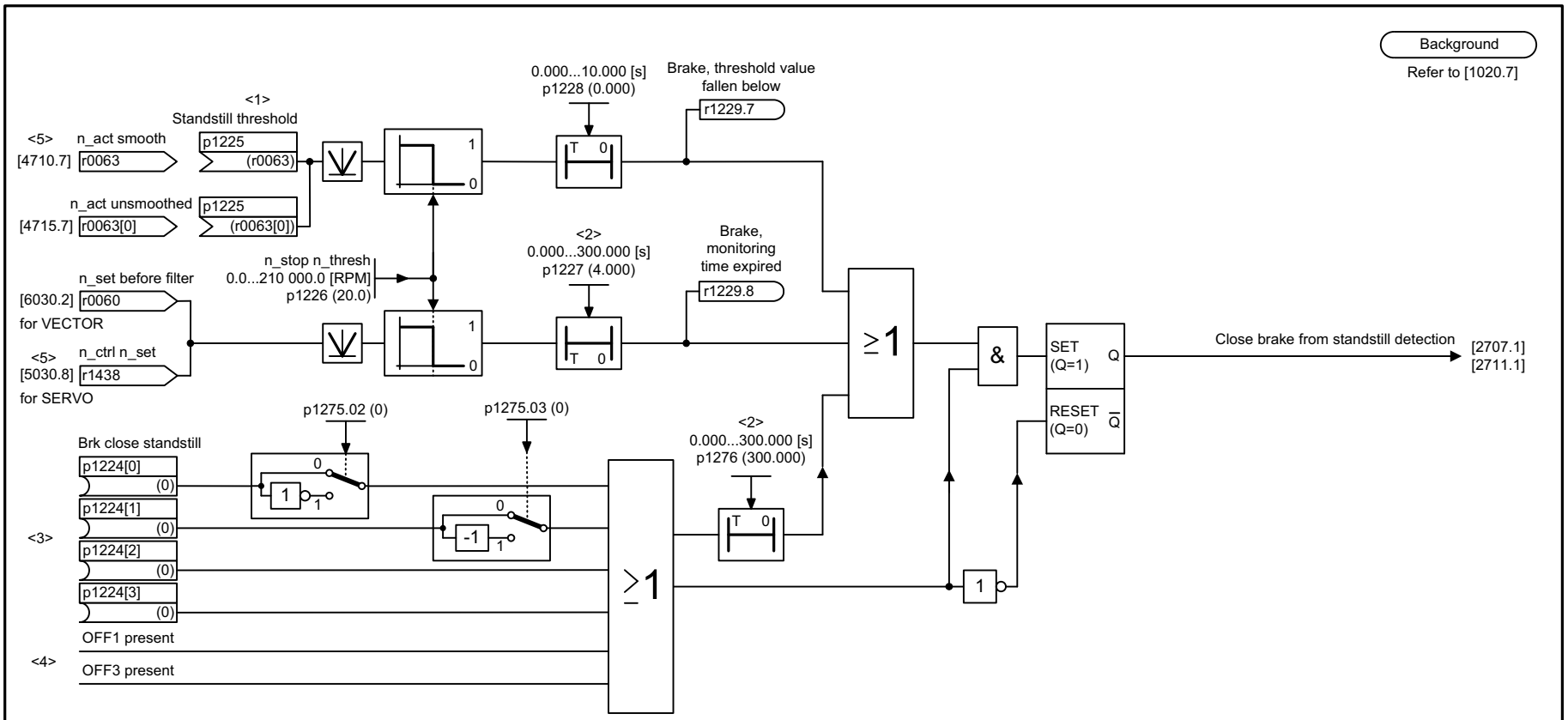

<1> Shutdown threshold of the standstill detection. In this case (e.g. when using a brake), another criterion than the speed actual value can be selected to clear the pulses. Otherwise, we recommend to keep the factory setting.

<2> For p1276 = 300.000 s, the timer is de-activated, i.e. the timer output is always 0. Note: When operating a motor with a brake which must not be applied while the motor is rotating, the monitoring time of both timers must be set to 300 s.

<3> For operation without brake, p1224[0...3] must be 0 (factory setting) in order to avoid undesirable interaction with the sequence control.

<4> The internal signal comprises signals that lead to OFF1 or OFF3, e.g. BICO or fault response.

<5> Only for SINAMICS S120.

1	2	3	4	5	6	7	8
DO: SERVO, VECTOR					fp_2704_54_eng.vsd	Function diagram	- 2704 -
Brake control - Extended brake control, zero-speed detection (r0108.14 = 1)					12.10.10 V04.05.00	S120/S150/G130/G150	

© Siemens AG 2012 All Rights Reserved

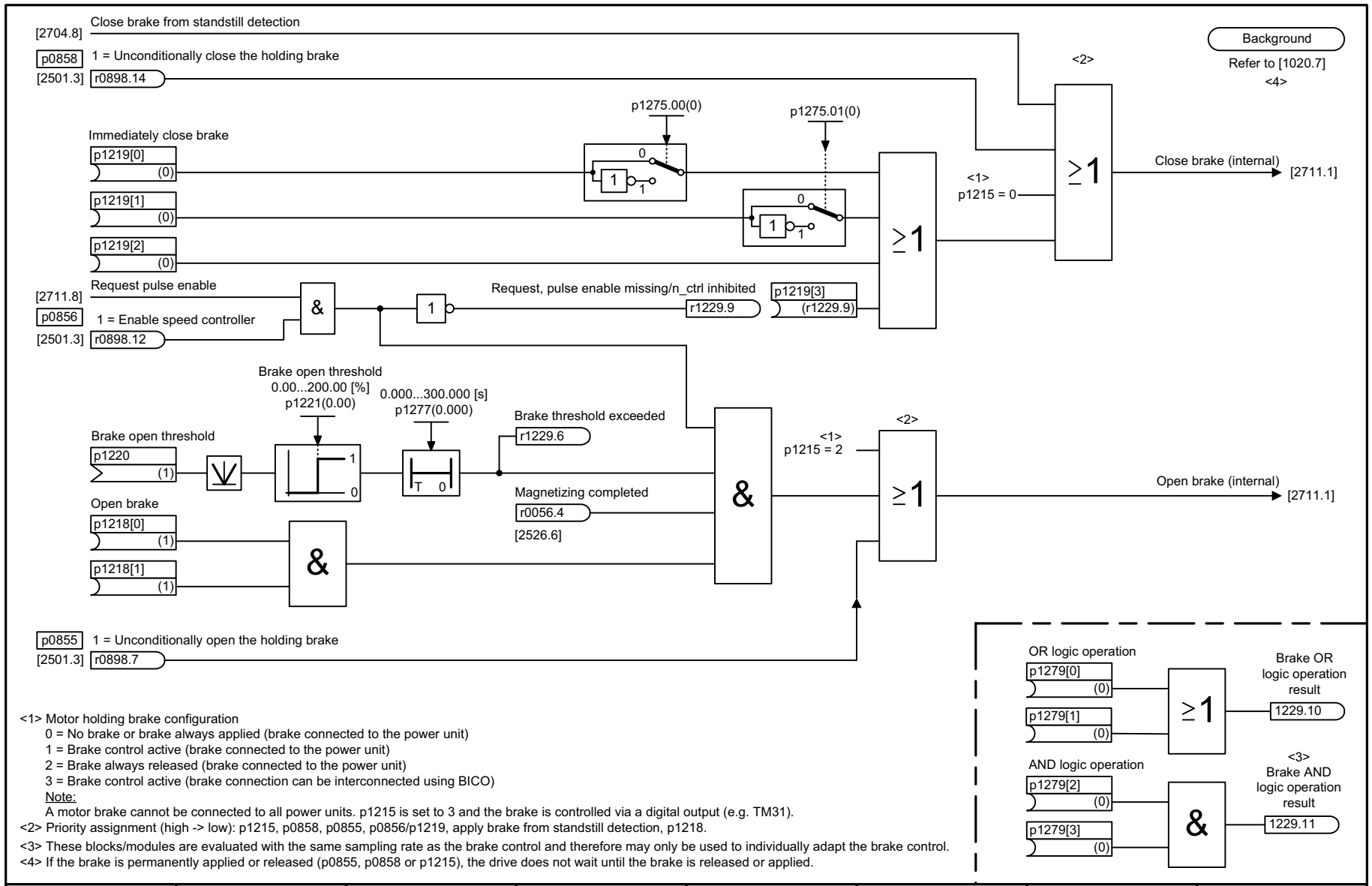

<1> Motor holding brake configuration
0 = No brake or brake always applied (brake connected to the power unit)
1 = Brake control active (brake connected to the power unit)
2 = Brake always released (brake connected to the power unit)
3 = Brake control active (brake connection can be interconnected using BICO)
Note:
A motor brake cannot be connected to all power units. p1215 is set to 3 and the brake is controlled via a digital output (e.g. TM31).
<2> Priority assignment (high -> low): p1215, p0858, p0855, p0856/p1219, apply brake from standstill detection, p1218.
<3> These blocks/modules are evaluated with the same sampling rate as the brake control and therefore may only be used to individually adapt the brake control.
<4> If the brake is permanently applied or released (p0855, p0858 or p1215), the drive does not wait until the brake is released or applied.

1	2	3	4	5	6	7	8
DO: SERVO, VECTOR					fp_2707_54_eng.vsd	Function diagram	- 2707 -
Brake control - Extended brake control, open/close brake (r0108.14 = 1)					13.10.10 V04.05.00	S120/S150/G130/G150	

Fig. 2-83 2707 – Extended brake control, open/close brake (r0108.14 = 1)

© Siemens AG 2012 All Rights Reserved

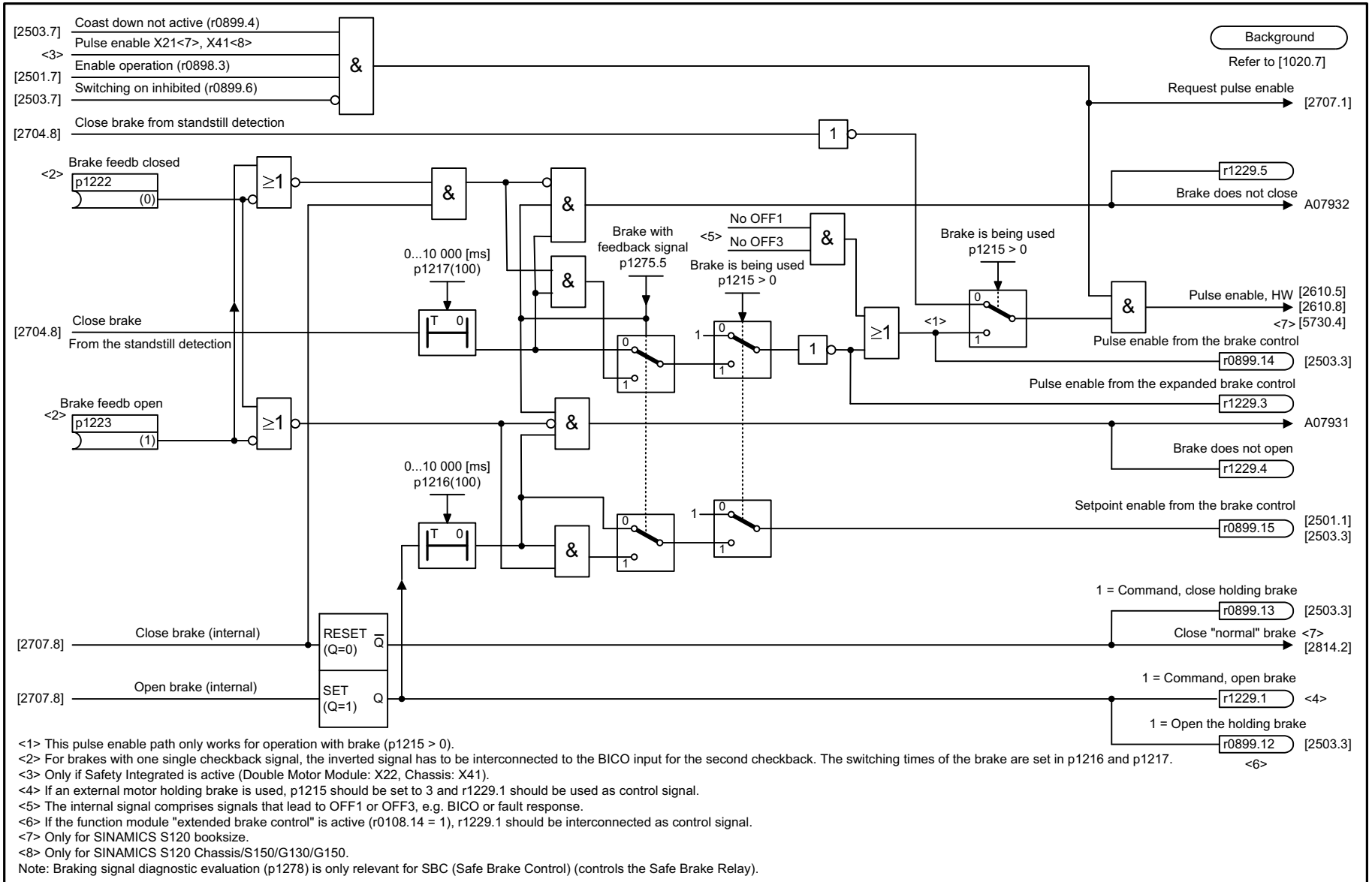

<1> This pulse enable path only works for operation with brake (p1215 > 0).
<2> For brakes with one single checkback signal, the inverted signal has to be interconnected to the BICO input for the second checkback. The switching times of the brake are set in p1216 and p1217.
<3> Only if Safety Integrated is active (Double Motor Module: X22, Chassis: X41).
<4> If an external motor holding brake is used, p1215 should be set to 3 and r1229.1 should be used as control signal.
<5> The internal signal comprises signals that lead to OFF1 or OFF3, e.g. BICO or fault response.
<6> If the function module "extended brake control" is active (r0108.14 = 1), r1229.1 should be interconnected as control signal.
<7> Only for SINAMICS S120 booksize.
<8> Only for SINAMICS S120 Chassis/S150/G130/G150.
Note: Braking signal diagnostic evaluation (p1278) is only relevant for SBC (Safe Brake Control) (controls the Safe Brake Relay).

1	2	3	4	5	6	7	8
DO: SERVO, VECTOR					fp_2711_54_eng.vsd	Function diagram	- 2711 -
Brake control - Extended brake control, signal outputs (r0108.14 = 1)					06.12.10 V04.05.00	S120/S150/G130/G150	

Fig. 2-84 2711 – Extended brake control, signal outputs (r0108.14 = 1)

© Siemens AG 2012 All Rights Reserved

2.10 Safety Integrated Basic Functions

Function diagrams

2800 – Parameter manager	2-1074
2802 – Monitoring and faults/alarms	2-1075
2804 – Status words	2-1076
2810 – STO (Safe Torque Off), SS1 (Safe Stop 1)	2-1077
2811 – STO (Safe Torque Off), safe pulse suppression	2-1078
2814 – SBC (Safe Brake Control), SBA (Safe Brake Adapter)	2-1079

© Siemens AG 2012 All Rights Reserved

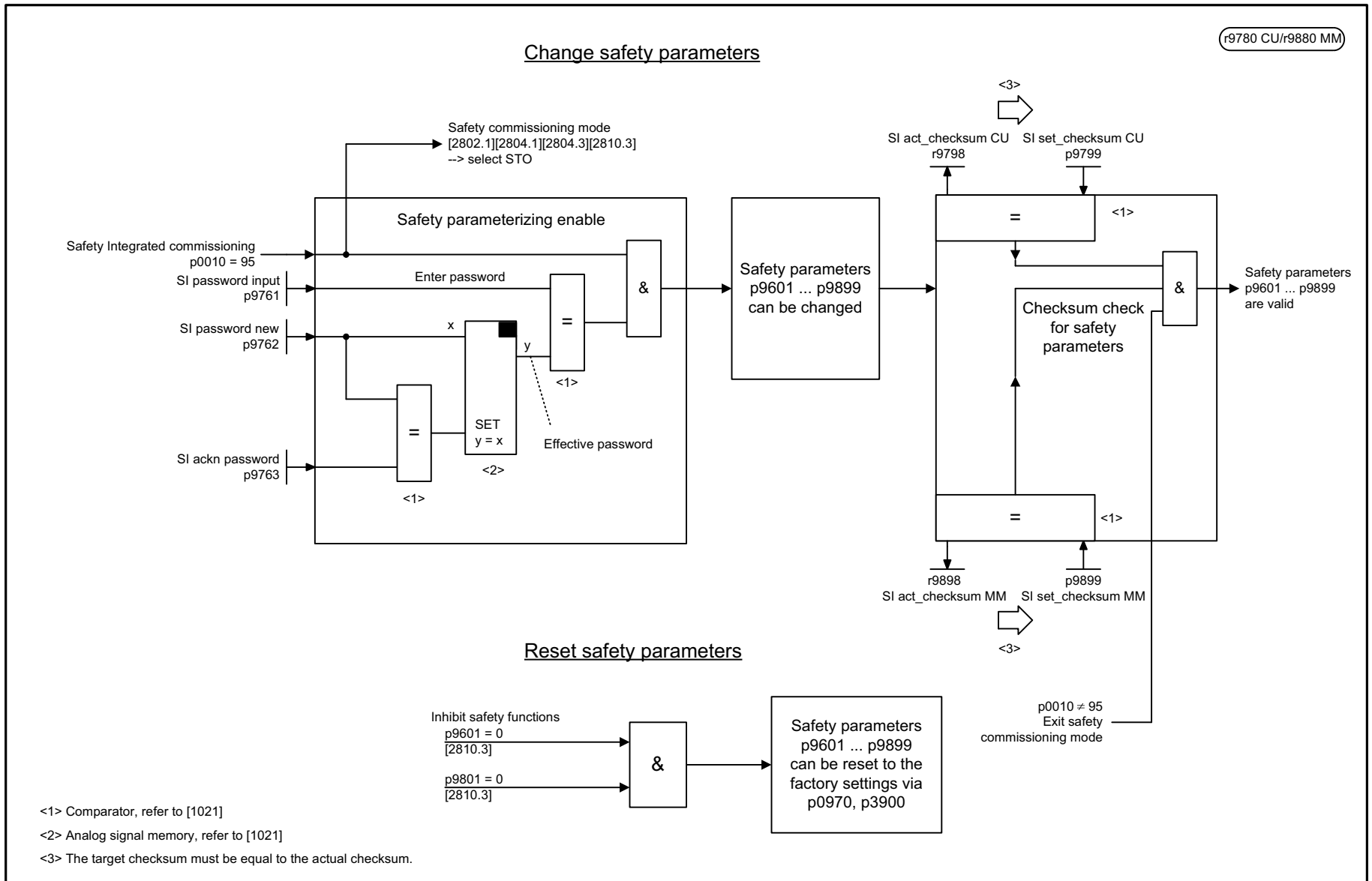

1	2	3	4	5	6	7	8
DO: SERVO, VECTOR					fp_2800_54_eng.vsd	Function diagram	- 2800 -
SI Basic Functions - Parameter manager					15.11.11 V04.05.00	S120/S150/G130/G150	

Fig. 2-85 2800 – Parameter manager

© Siemens AG 2012 All Rights Reserved

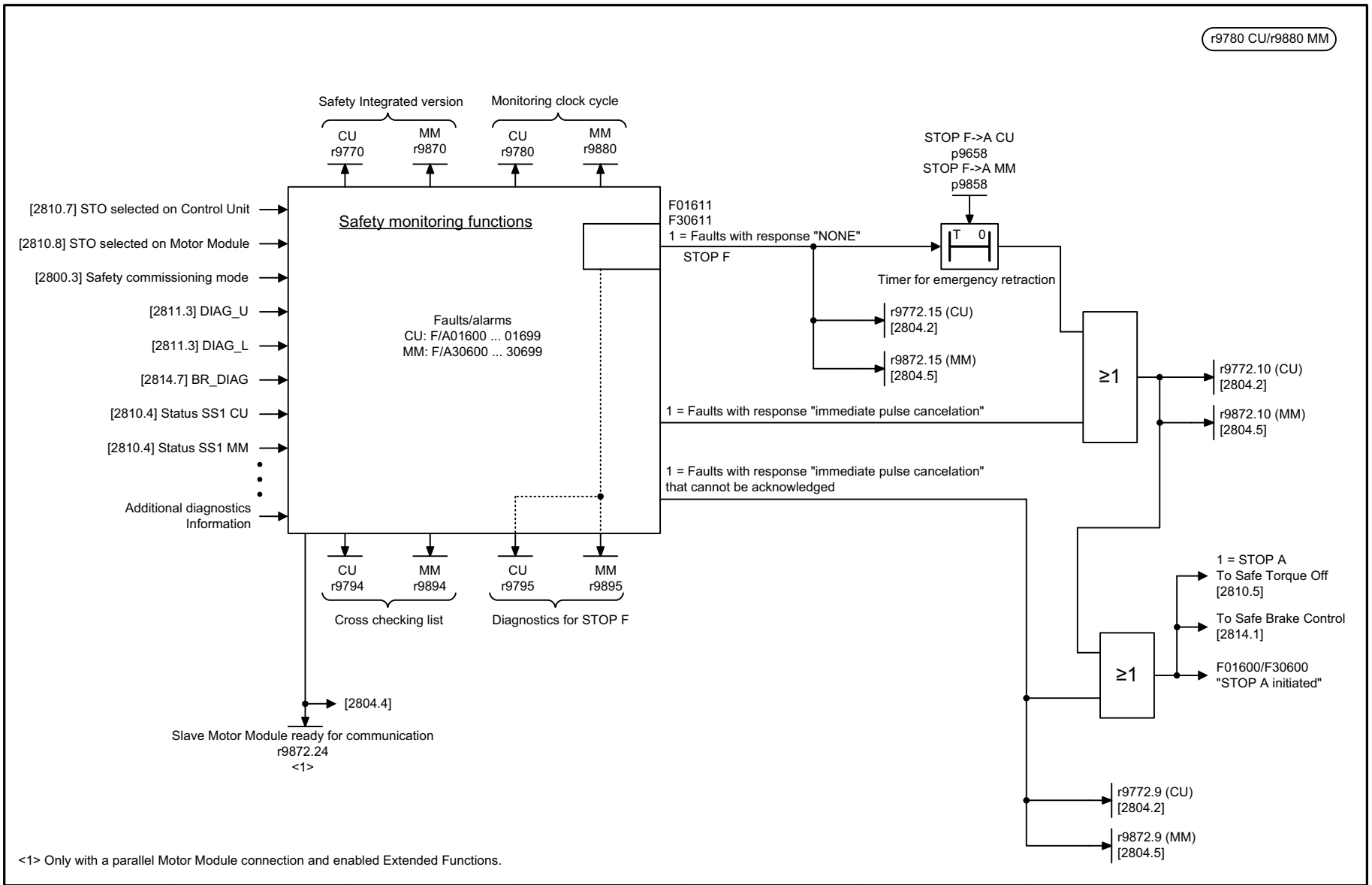

<1> Only with a parallel Motor Module connection and enabled Extended Functions.

1	2	3	4	5	6	7	8
DO: SERVO, VECTOR					fp_2802_54_eng.vsd	Function diagram	- 2802 -
SI Basic Functions - Monitoring functions and faults/alarms					15.11.11 V04.05.00	S120/S150/G130/G150	

© Siemens AG 2012 All Rights Reserved

Fig. 2-87 2804 – Status words

Status word Safety Integrated Control Unit → r9772

	Bit No.	Status (Control Unit)
[2810.7]	0	1 = STO selected on Control Unit
[2811.6]	1	1 = STO active on Control Unit
[2810.5]	2	1 = SS1 delay time active on the Control Unit
	▪ ▪ ▪	Reserved
[2814.3]	4	1 = SBC requested
[2814.4]	5	1 = SS1 selected on the Control Unit (Basic Functions)
[2814.5]	6	1 = SS1 active on the Control Unit (Basic Functions)
	▪ ▪ ▪	Reserved
[2802.7]	9	1 = STOP A cannot be acknowledged, active
[2802.8]	10	1 = STOP A active
	▪ ▪ ▪	Reserviert
[2802.5]	15	1 = STOP F active
[2810.6]	16	1 = STO cause: Safety comm. mode
[2810.3]	17	1 = STO cause selection via terminal (Basic Functions)
[2825.8]	18	1 = STO cause: selection via SMM
[2810.3]	19	1 = STO cause actual value missing
[2810.6]	20	1 = STO cause selection PROFIsafe (Basic Functions)
	21	Reserved
[2810.3]	22	1 = SS1 cause selection terminal (Basic Functions)
[2810.4]	23	1 = SS1 cause selection PROFIsafe (Basic Functions)
	▪ ▪ ▪	Reserved

Status word Safety Integrated Motor Module → r9872

	Bit No.	Status (Motor Module)
[2810.7]	0	1 = STO on Motor Module selected
[2811.3]	1	1 = STO on Motor Module active
[2810.5]	2	1 = SS1 delay time on Motor Module active
	3	1 = Safe Brake Adapter feedback signal
[2814.3]	4	1 = SBC requested
[2814.4]	5	1 = SS1 selected on the Motor Module (Basic Functions)
[2814.5]	6	1 = SS1 active on the Motor Module (Basic Functions)
	▪ ▪ ▪	Reserved
[2802.7]	9	1 = STOP A cannot be acknowledged, active
[2802.8]	10	1 = STOP A active
	▪ ▪ ▪	Reserved
[2802.5]	15	1 = STOP F active
[2810.6]	16	1 = STO cause: Safety comm. mode
[2810.3]	17	1 = STO cause selection via terminal (Basic Functions)
[2825.8]	18	1 = STO cause: selection via SMM
	19	Reserved
[2810.6]	20	1 = STO cause selection PROFIsafe (Basic Functions)
	21	Reserved
[2810.3]	22	1 = SS1 cause selection terminal (Basic Functions)
[2810.4]	23	1 = SS1 cause selection PROFIsafe (Basic Functions)
[2802.3]	24	1 = Slave Motor Module ready for communication
	▪ ▪ ▪	Reserved

Status word Safety Integrated Control Unit and Motor Module (r9780 CU/r9880 MM) → r9773

	Bit No.	Status (Control Unit + Motor Module)
&	0	1 = STO selected in drive
&	1	1 = STO active in drive
&	2	1 = SS1 delay time active in the drive
	▪ ▪ ▪	Reserved
&	4	1 = SBC requested
&	5	1 = SS1 selected in the drive (Basic Functions)
&	6	1 = SS1 active in the drive (Basic Functions)
	▪ ▪ ▪	Reserved
[2810.5]	31	1 = Shutdown paths must be tested

Status word Safety Integrated Safe Torque Off group → r9774

	Bit No.	Status (Safe Torque Off group)
r9773.0 Group n &	0	1 = STO selected in group
r9773.1 Group n &	1	1 = STO active in group
r9773.2 Group n &	2	1 = SS1 delay time active in group
	3	Reserved
r9773.4 Group n &	4	1 = SBC requested in group
r9773.5 Group n &	5	1 = SS1 selected in group (Basic Functions)
r9773.5 Group n &	6	1 = SS1 active in group (Basic Functions)
	▪ ▪ ▪	Reserved
r9773.31 Group n &	31	1 = Shutdown paths of the group must be tested

1	2	3	4	5	6	7	8
DO: SERVO, VECTOR					fp_2804_54_eng.vsd	Function diagram	- 2804 -
SI Basic functions - Status words					15.11.11 V04.05.00	S120/S150/G130/G150	

© Siemens AG 2012 All Rights Reserved

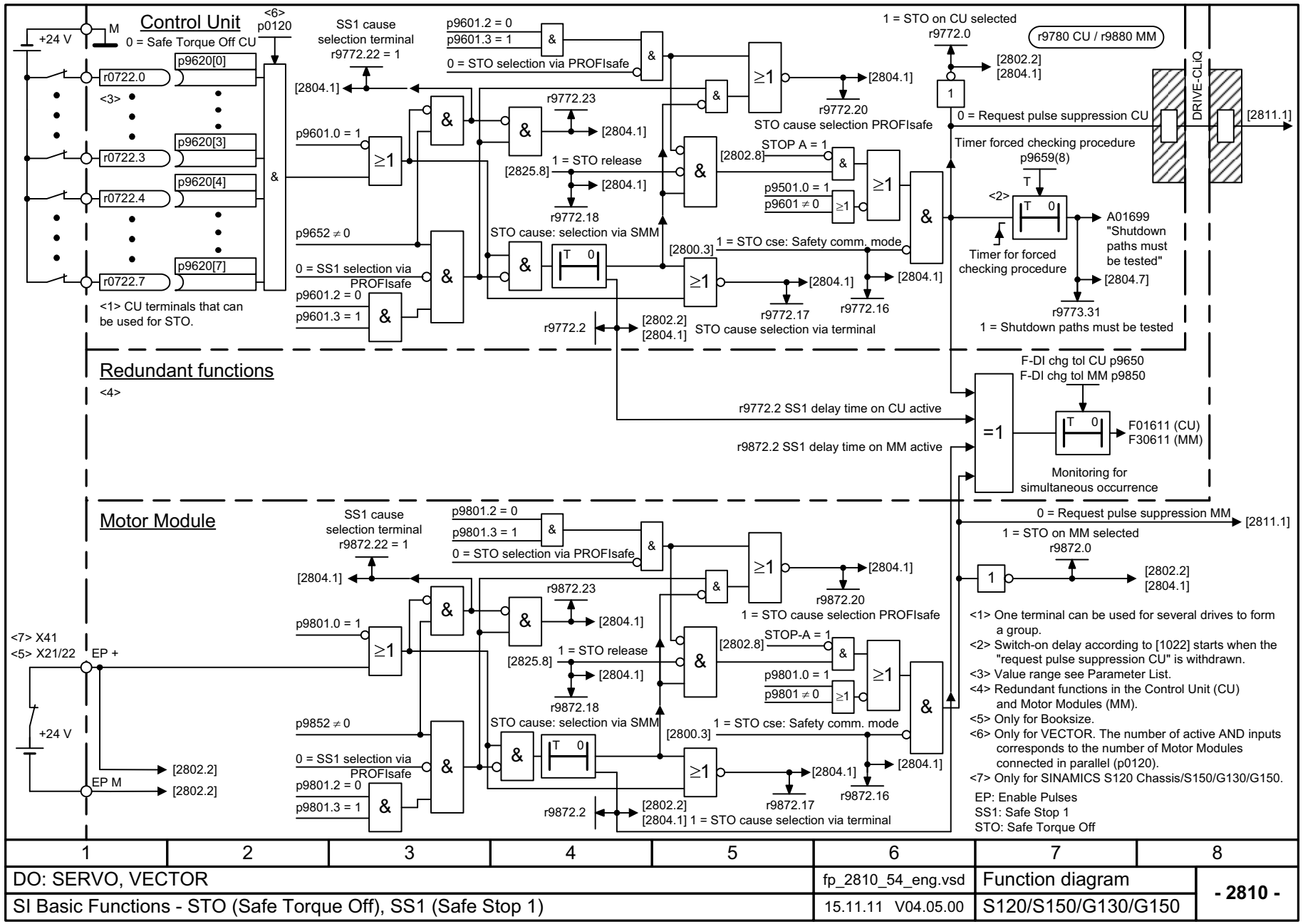

1	2	3	4	5	6	7	8
DO: SERVO, VECTOR					fp_2810_54_eng.vsd	Function diagram	- 2810 -
SI Basic Functions - STO (Safe Torque Off), SS1 (Safe Stop 1)					15.11.11 V04.05.00	S120/S150/G130/G150	

Fig. 2-88 2810 – STO (Safe Torque Off), SS1 (Safe Stop 1)

© Siemens AG 2012 All Rights Reserved

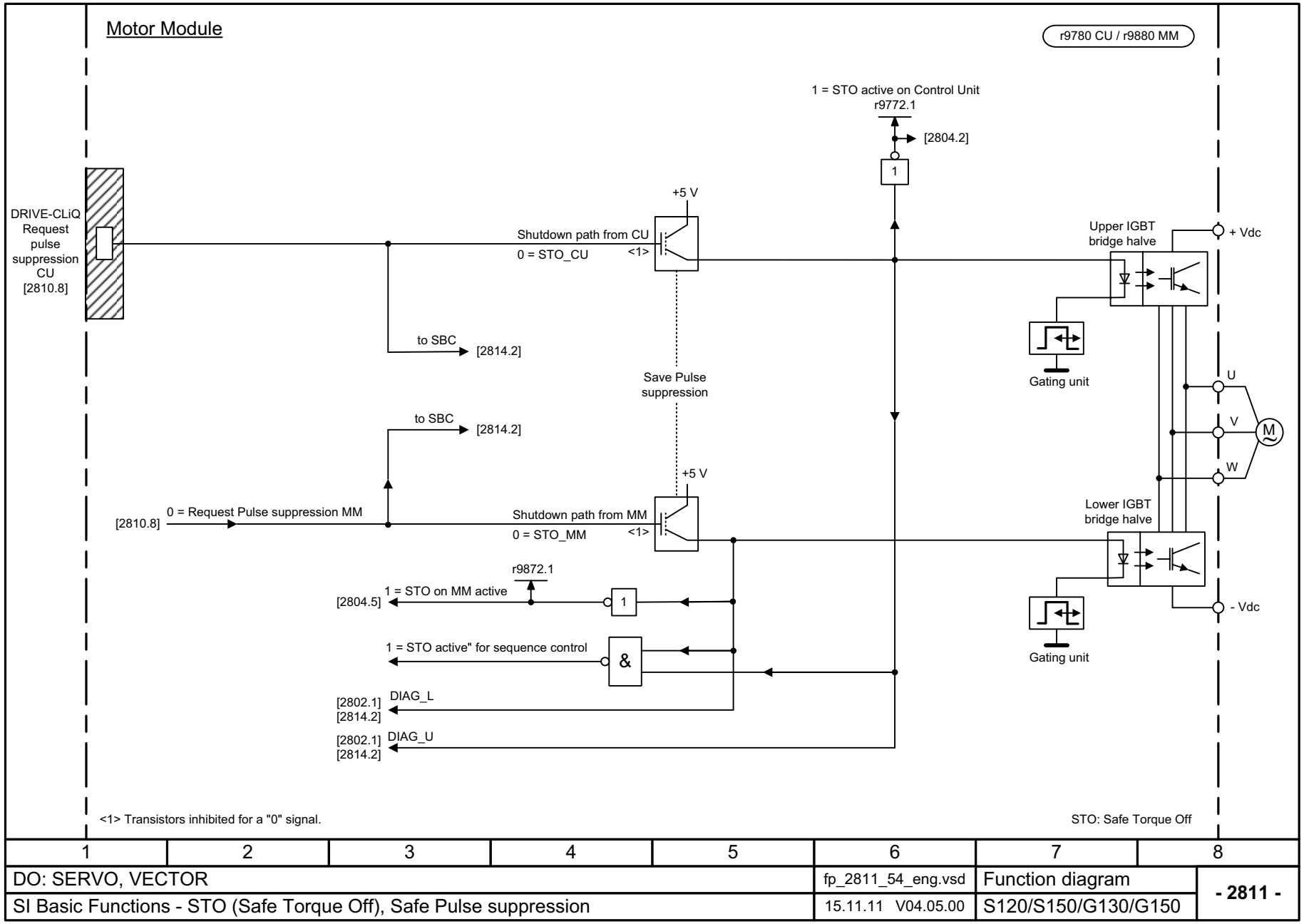

1	2	3	4	5	6	7	8
DO: SERVO, VECTOR					fp_2811_54_eng.vsd	Function diagram	- 2811 -
SI Basic Functions - STO (Safe Torque Off), Safe Pulse suppression					15.11.11 V04.05.00	S120/S150/G130/G150	

Fig. 2-89 2811 – STO (Safe Torque Off), safe pulse suppression

© Siemens AG 2012 All Rights Reserved

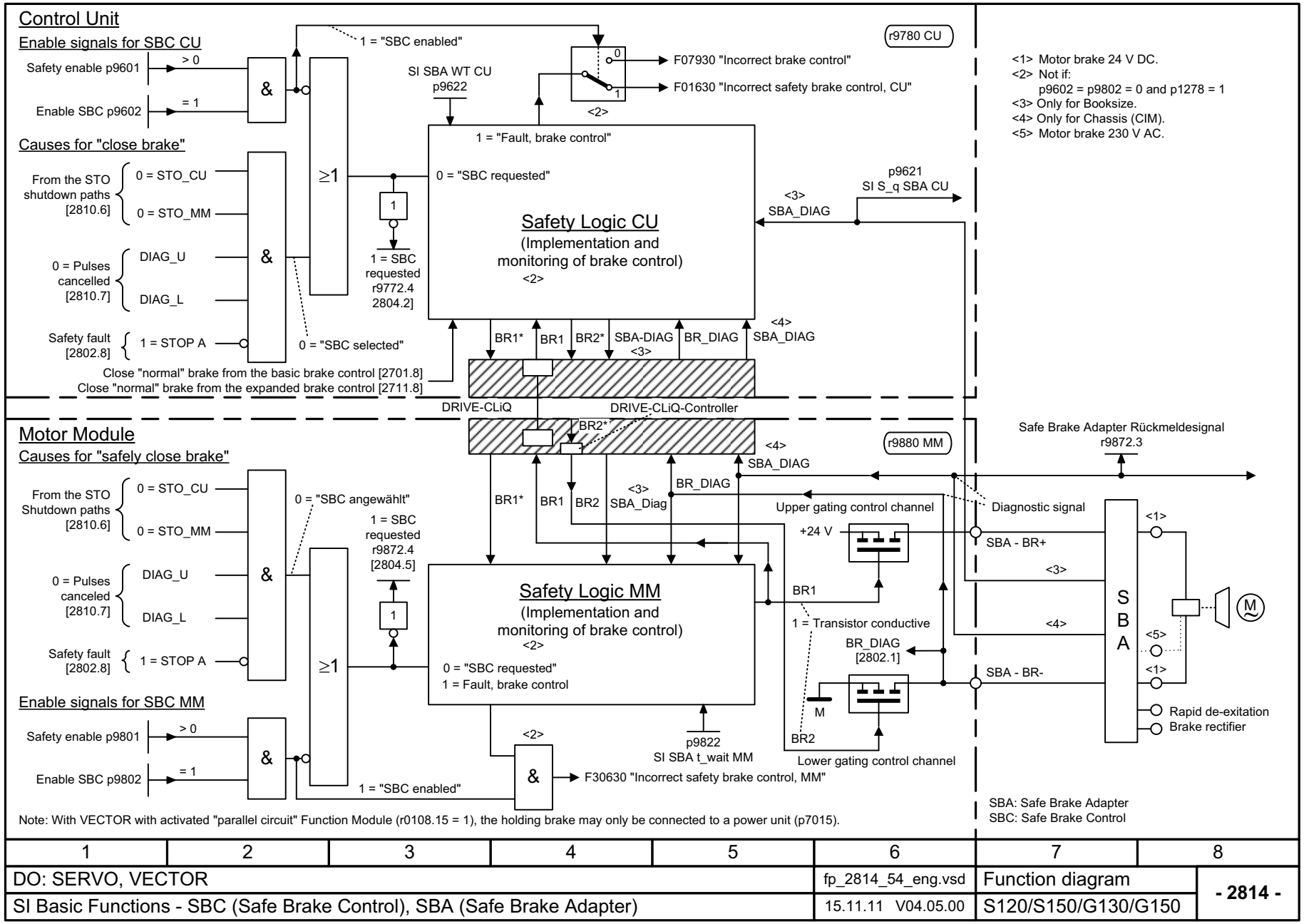

1	2	3	4	5	6	7	8
DO: SERVO, VECTOR					fp_2814_54_eng.vsd	Function diagram	- 2814 -
SI Basic Functions - SBC (Safe Brake Control), SBA (Safe Brake Adapter)					15.11.11 V04.05.00	S120/S150/G130/G150	

Fig. 2-90 2814 – SBC (Safe Brake Control), SBA (Safe Brake Adapter)

© Siemens AG 2012 All Rights Reserved

2.11 Safety Integrated Extended Functions

Function diagrams

2820 – SLS (Safely-Limited Speed)	2-1081
2822 – SLP (Safely-Limited Position)	2-1082
2825 – SS1, SS2, SOS, internal STOP B, C, D, F	2-1083
2840 – Control word and status word	2-1084
2846 – Parameter manager	2-1085
2847 – TM54F parameter manager	2-1086
2848 – TM54F configuration, F-DI/F-DO test	2-1087
2850 – TM54F (F-DI 0 ... F-DI 4)	2-1088
2851 – TM54F (F-DI 5 ... F-DI 9)	2-1089
2853 – TM54F (F-DO 0 ... F-DO 3, DI 20 ... DI 23)	2-1090
2855 – TM54F control interface (p9601.2 = 1 & p9601.3 = 0)	2-1091
2856 – TM54F Safe State selection	2-1092
2857 – TM54F assignment (F-DO 0 ... F-DO 3)	2-1093
2860 – SSM (Safe Speed Monitor)	2-1094
2861 – SDI (Safe Direction)	2-1095

© Siemens AG 2012 All Rights Reserved

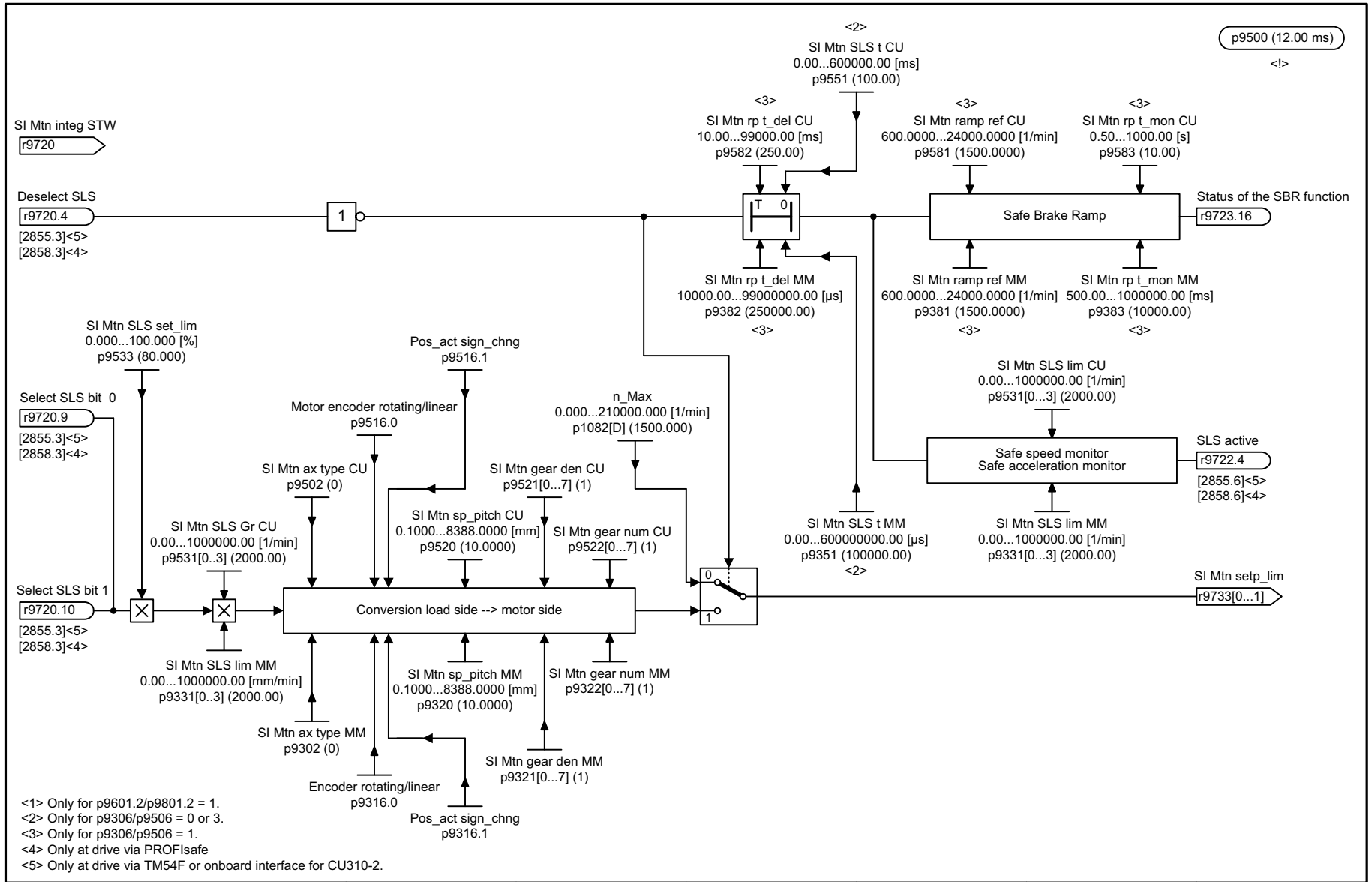

1	2	3	4	5	6	7	8
DO: SERVO, VECTOR					fp_2820_54_eng.vsd	Function diagram	- 2820 -
SI Extended Functions - SLS (Safely-Limited Speed)					15.11.11 V04.05.00	S120/S150/G130/G150	

Fig. 2-91 2820 – SLS (Safely-Limited Speed)

© Siemens AG 2012 All Rights Reserved

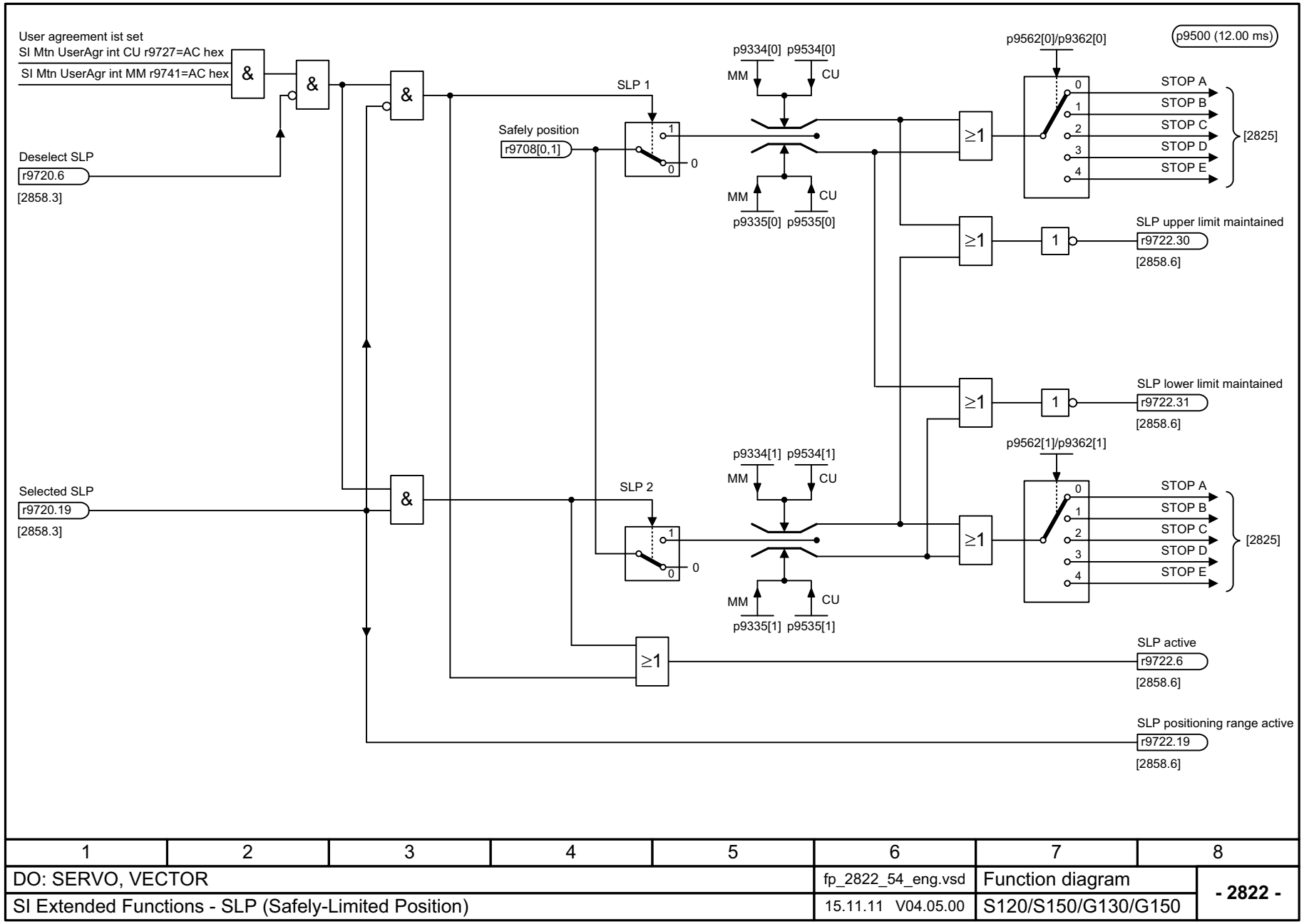

1	2	3	4	5	6	7	8
DO: SERVO, VECTOR					fp_2822_54_eng.vsd	Function diagram	- 2822 -
SI Extended Functions - SLP (Safely-Limited Position)					15.11.11 V04.05.00	S120/S150/G130/G150	

Fig. 2-92 2822 – SLP (Safely-Limited Position)

© Siemens AG 2012 All Rights Reserved

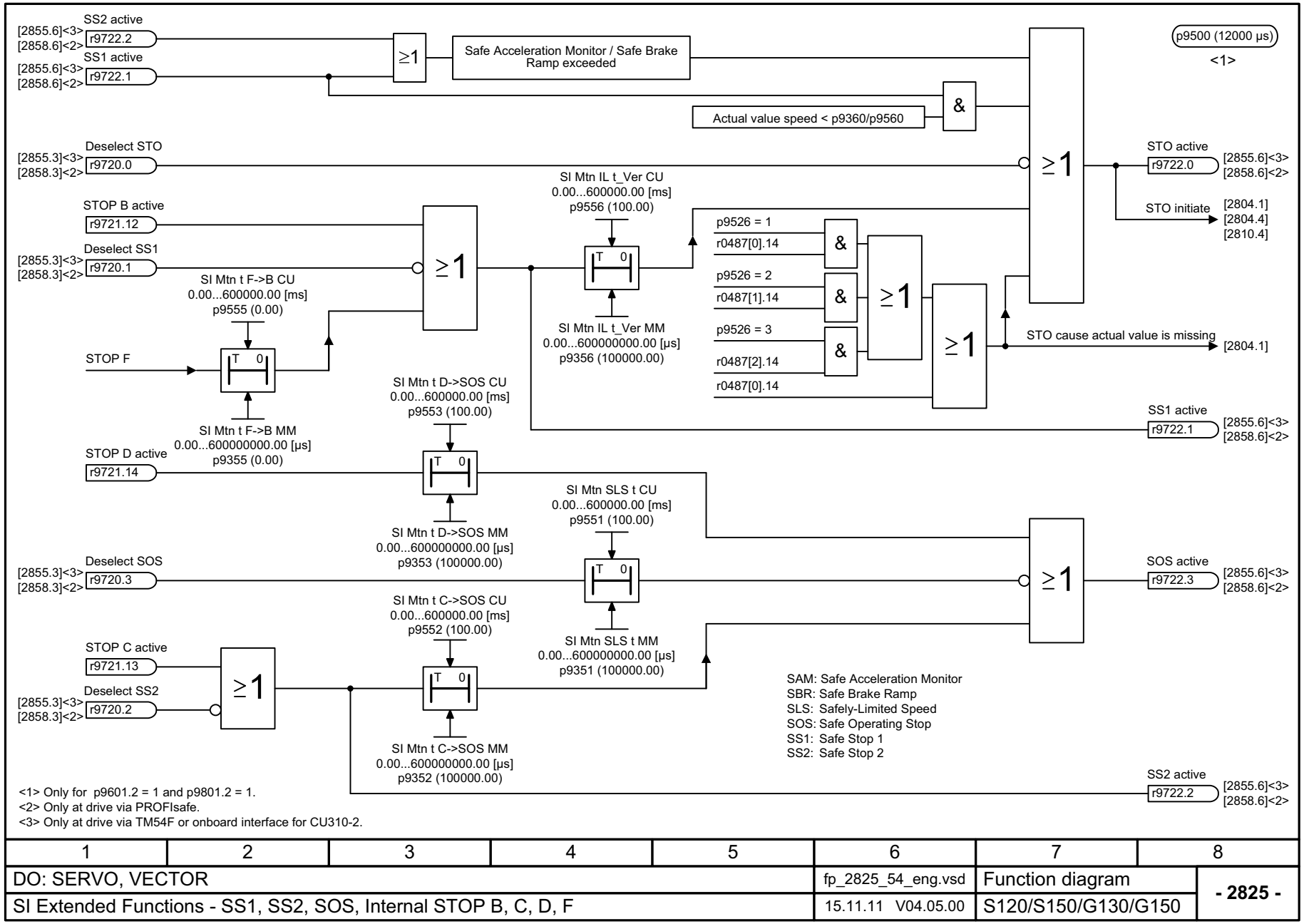

1	2	3	4	5	6	7	8
DO: SERVO, VECTOR					fp_2825_54_eng.vsd	Function diagram	- 2825 -
SI Extended Functions - SS1, SS2, SOS, Internal STOP B, C, D, F					15.11.11 V04.05.00	S120/S150/G130/G150	

Fig. 2-93 2825 – SS1, SS2, SOS, internal STOP B, C, D, F

© Siemens AG 2012 All Rights Reserved

Fig. 2-94 2840 – Control word and status word

Motion PROFIsafe control word

Mtn integ STW r9720

	Bit No.	Motion PROFIsafe control word
<1> [2855.3] <2> [2858.3]	0	1 = STO deselection
<1> [2855.3] <2> [2858.3]	1	1 = SS1 deselection
<1> [2855.3] <2> [2858.3]	2	1 = SS2 deselection
<1> [2855.3] <2> [2858.3]	3	1 = SOS deselection
<1> [2855.3] <2> [2858.3]	4	1 = SLS deselection
	5	Reserved
<1> [2855.3] <2> [2858.3]	6	1 = SLP deselection
<1> [2855.3] <2> [2858.3]	7	1/0 = Acknowledgement
	8	Reserved
<1> [2855.3] <2> [2858.3]	9	1 = SLS selection bit 0 active
<1> [2855.3] <2> [2858.3]	10	1 = SLS selection bit 1 active
	11	Reserved
<1> [2855.3] <2> [2858.3]	12	1 = Deselect SDI positive
<1> [2855.3] <2> [2858.3]	13	1 = Deselect SDI negative
	14-18	Reserved
<1> [2855.3] <2> [2858.3]	19	1 = Auswahl SLP
	20-31	Reserviert

Motion PROFIsafe status word

p9500 (12.00 ms)

Mtn integ Stat r9722

	Bit No.	Motion PROFIsafe status word	
<1> [2855.6] <2> [2858.6]	0	1 = STO active	
<1> [2855.6] <2> [2858.6]	1	1 = SS1 active	
<1> [2855.6] <2> [2858.6]	2	1 = SS2 active	
<1> [2855.6] <2> [2858.6]	3	1 = SOS active	
<1> [2855.6] <2> [2858.6]	4	1 = SLS active	
	5	Reserved	
<1> [2855.6] <2> [2858.6]	6	1 = SLP active	
<1> [2855.6] <2> [2858.6]	7	1 = Not an internal event	
	8	Reserved	
<1> [2855.6] <2> [2858.6]	9	SLS stage active bit 0	0 = SLS1 1 = SLS2 2 = SLS3 3 = SLS4
<1> [2855.6] <2> [2858.6]	10	SLS stage active bit 1	
<1> [2855.6] <2> [2858.6]	11	1 = SOS selected <3>	
<1> [2855.6] <2> [2858.6]	12	1 = SDI positive active	
<1> [2855.6] <2> [2858.6]	13	1 = SDI negative active	
	14	Reserved	
<1> [2855.6] <2> [2858.6]	15	1 = SSM (Speed below limit)	
	16-18	Reserved	
<1> [2855.6] <2> [2858.6]	19	SLP positioning range active	0 = SLS1 1 = SLS2
	20-21	Reserved	
<1> [2855.6] <2> [2858.6]	22	1 = SP is valid	
<1> [2855.6] <2> [2858.6]	23	1 = Safely referenced	
	24-29	Reserved	
<1> [2855.6] <2> [2858.6]	30	1 = SLP upper limit maintained	
<1> [2855.6] <2> [2858.6]	31	1 = SLP lower limit maintained	

<1> Only at drive of the Extended Functions via TM54F or onboard interface for CU310-2 .
<2> Only at drive of the Extended Functions via PROFIsafe
<3> S_ZSW1.11 only at drive of the Extended Functions via TM54F or onboard interface for CU310-2 or S_ZSW2.29 only at drive of the Extended Functions via PROFIsafe

1	2	3	4	5	6	7	8
DO: SERVO, VECTOR					fp_2840_54_eng.vsd	Function diagram	- 2840 -
SI Extended Functions - Control word and status word					15.11.11 V04.05.00	S120/S150/G130/G150	

© Siemens AG 2012 All Rights Reserved

Fig. 2-95 2846 – Parameter manager

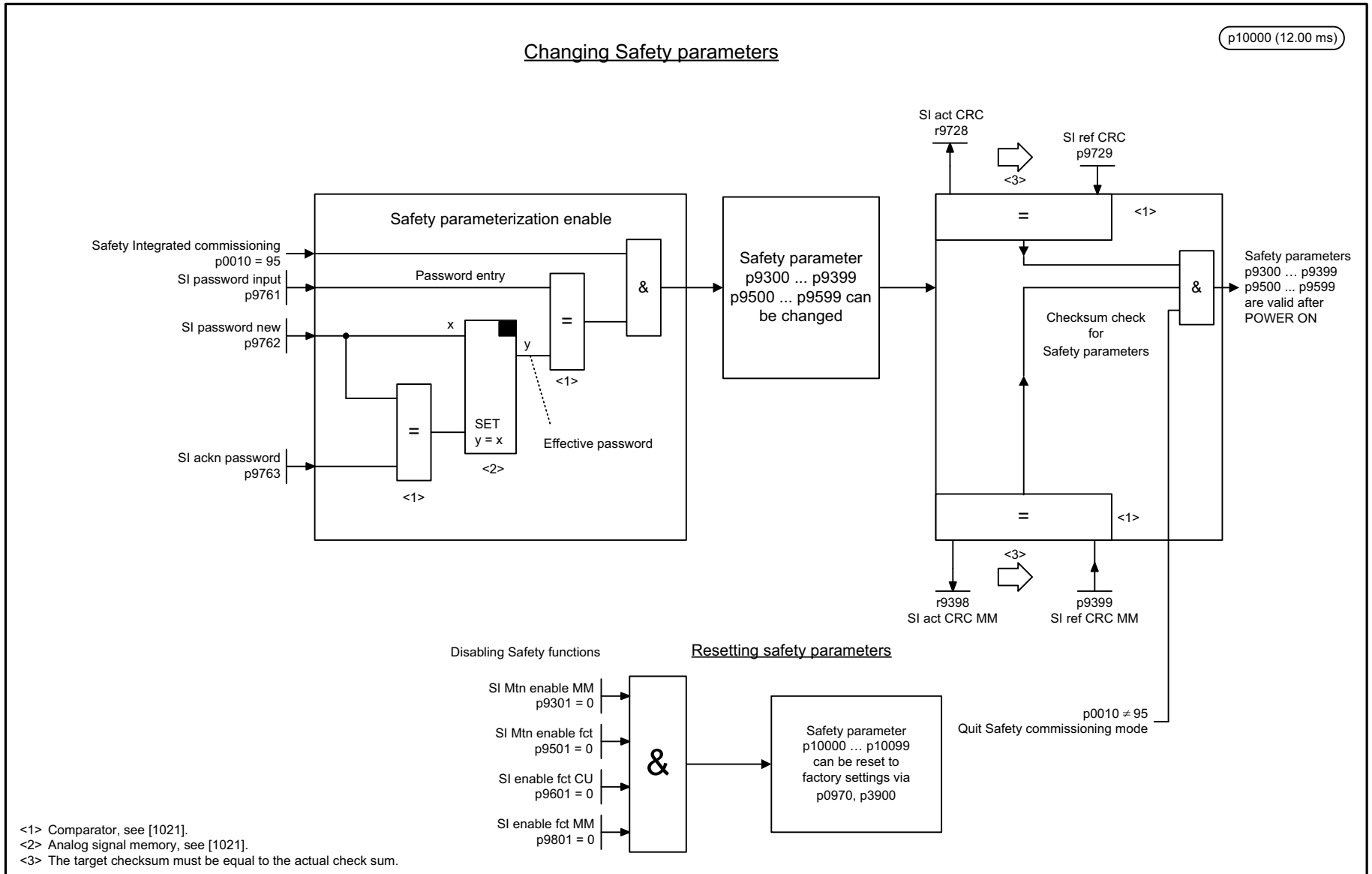

<1> Comparator, see [1021].
<2> Analog signal memory, see [1021].
<3> The target checksum must be equal to the actual check sum.

1	2	3	4	5	6	7	8
DO: SERVO, VECTOR					fp_2846_54_eng.vsd	Function diagram	- 2846 -
SI Extended Functions - Parameter manager					15.11.11 V04.05.00	S120/S150/G130/G150	

© Siemens AG 2012 All Rights Reserved

Fig. 2-96 2847 – TM54F parameter manager

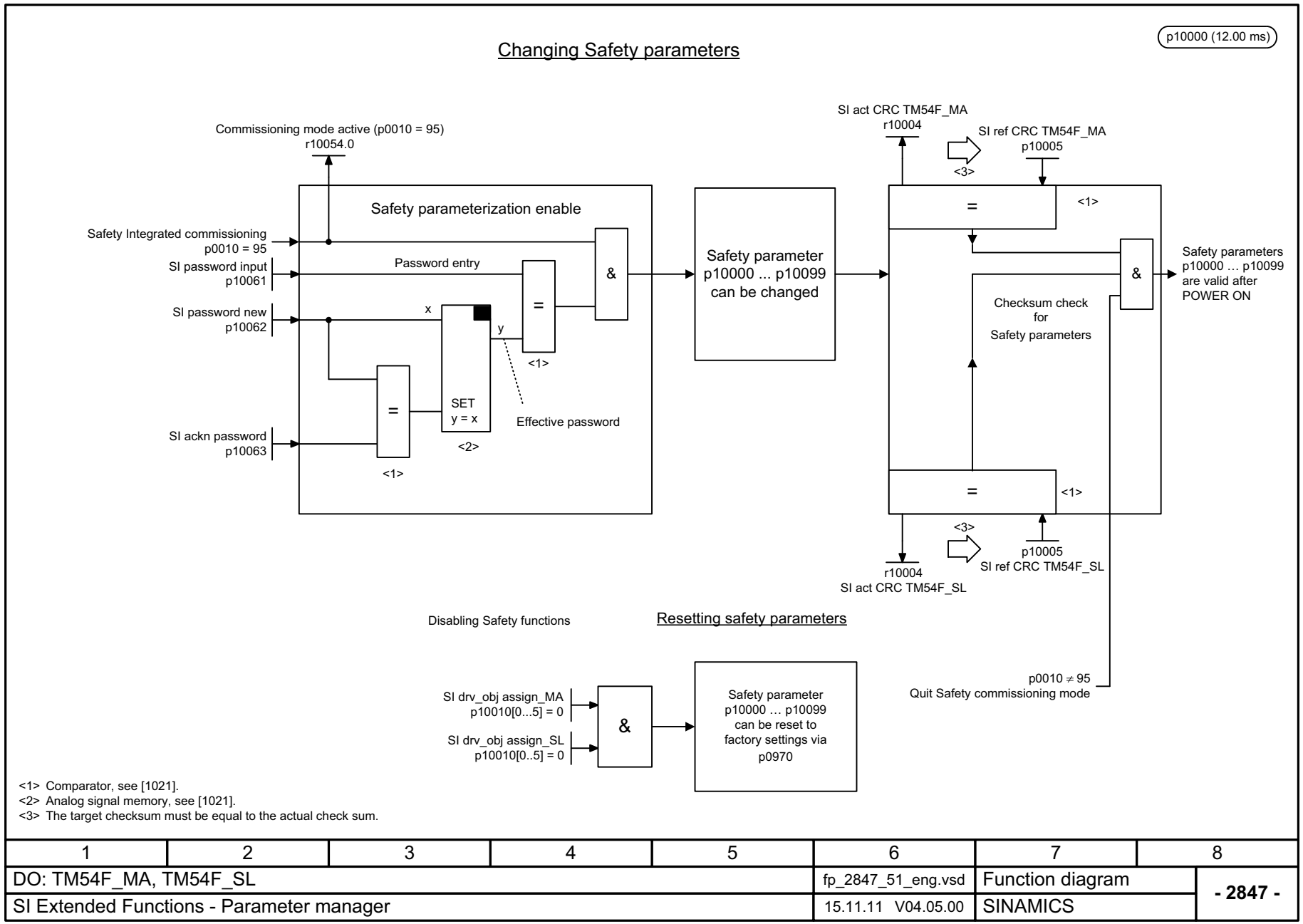

<1> Comparator, see [1021].
<2> Analog signal memory, see [1021].
<3> The target checksum must be equal to the actual check sum.

1	2	3	4	5	6	7	8
DO: TM54F_MA, TM54F_SL					fp_2847_51_eng.vsd	Function diagram	- 2847 -
SI Extended Functions - Parameter manager					15.11.11 V04.05.00	SINAMICS	

© Siemens AG 2012 All Rights Reserved

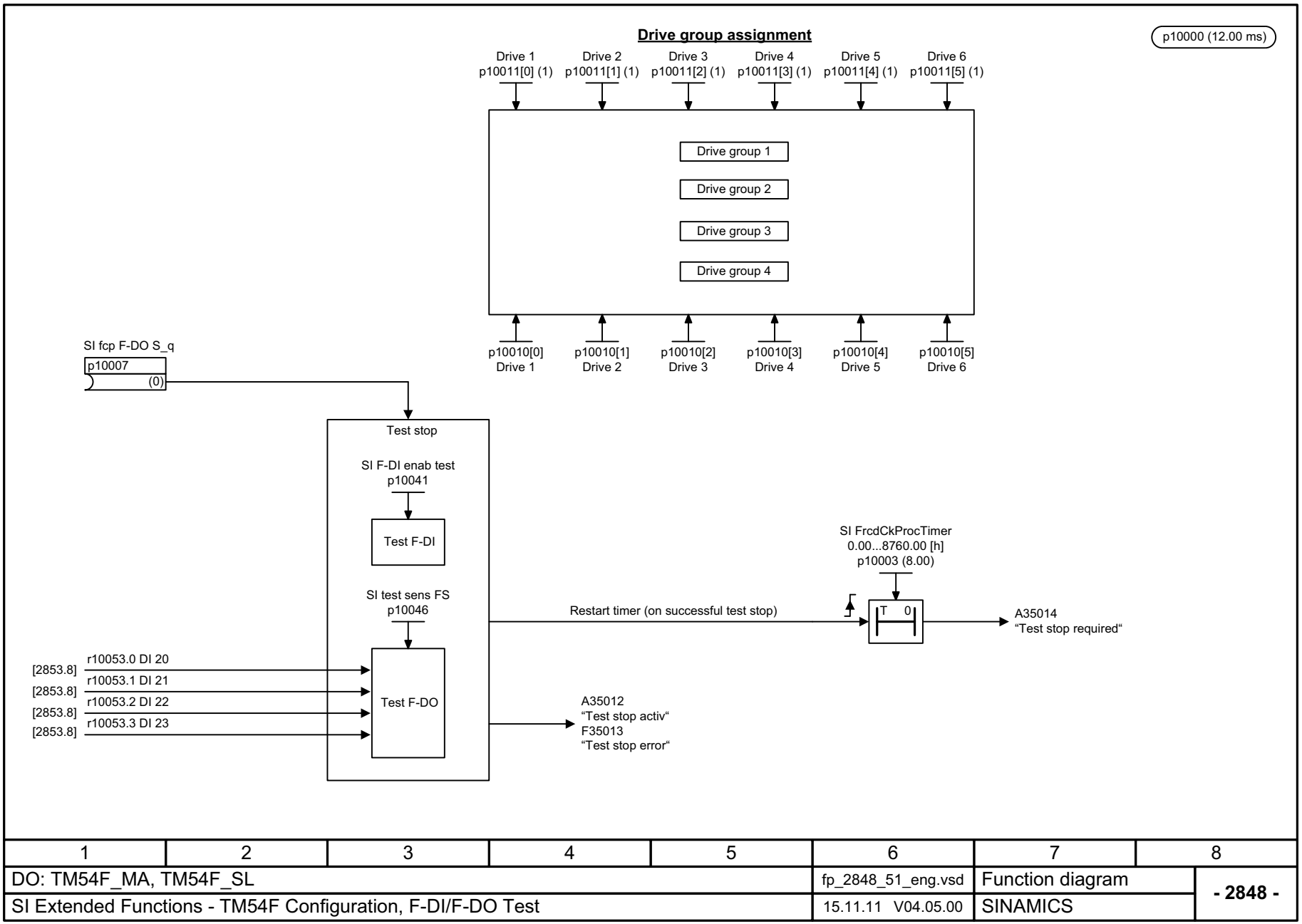

1	2	3	4	5	6	7	8
DO: TM54F_MA, TM54F_SL					fp_2848_51_eng.vsd	Function diagram	- 2848 -
SI Extended Functions - TM54F Configuration, F-DI/F-DO Test					15.11.11 V04.05.00	SINAMICS	

Fig. 2-97 2848 – TM54F configuration, F-DI/F-DO test

© Siemens AG 2012 All Rights Reserved

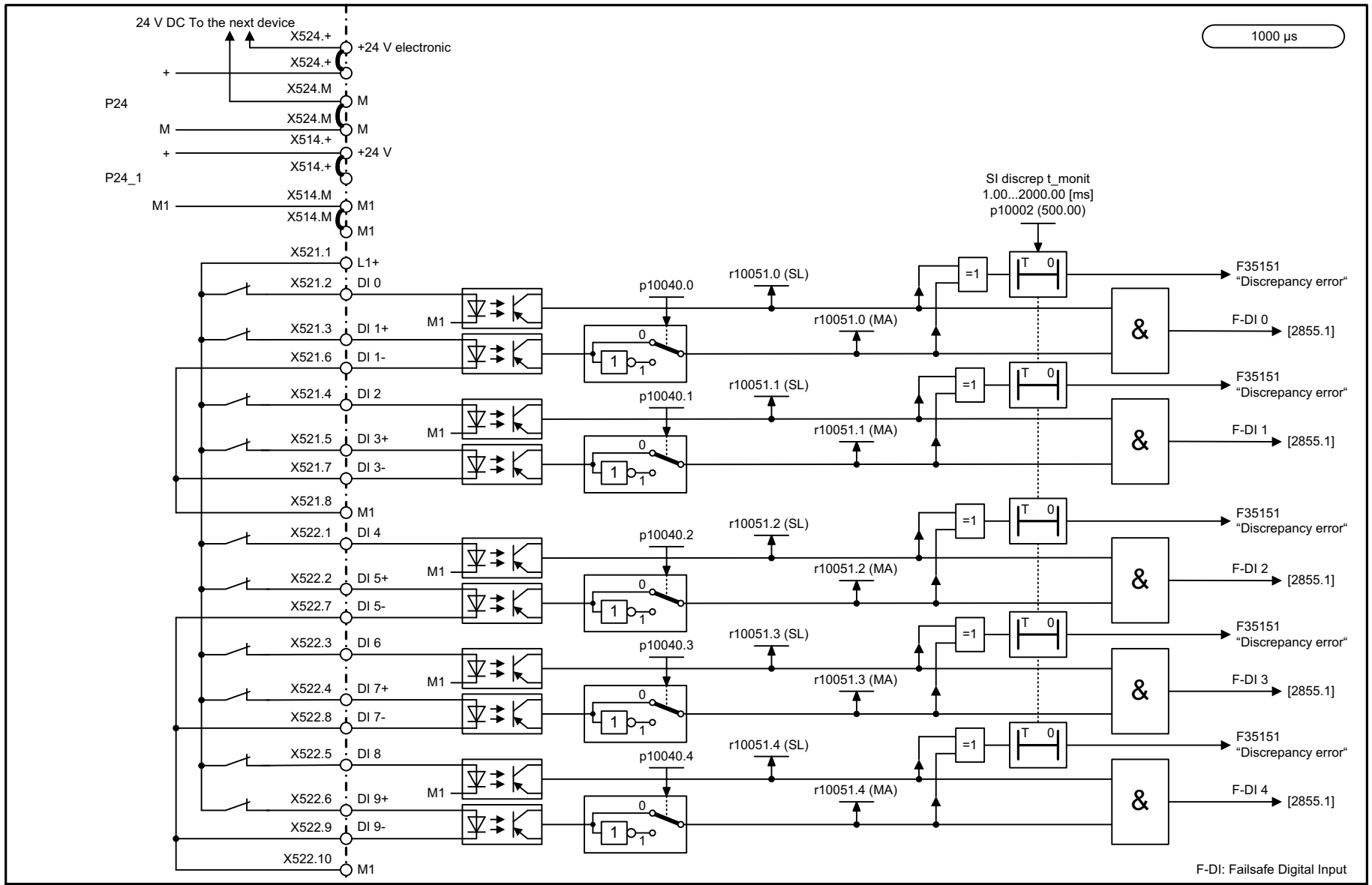

1	2	3	4	5	6	7	8
DO: TM54F_MA, TM54F_SL					fp_2850_51_eng.vsd	Function diagram	- 2850 -
SI Extended Functions - TM54F (F-DI 0 ... F-DI 4)					15.11.11 V04.05.00	SINAMICS	

Fig. 2-98 2850 – TM54F (F-DI 0 ... F-DI 4)

© Siemens AG 2012 All Rights Reserved

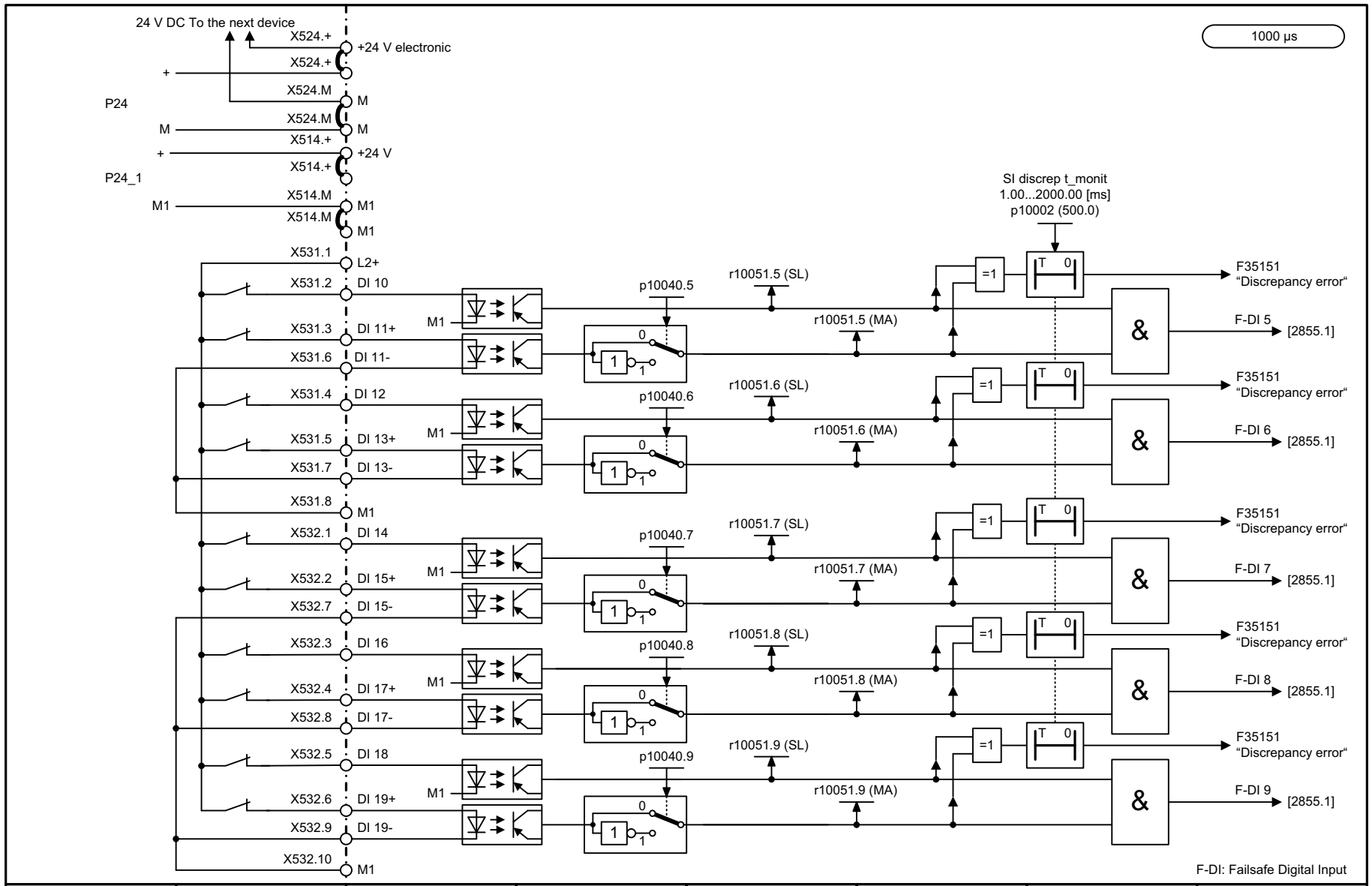

1	2	3	4	5	6	7	8
DO: TM54F_MA, TM54F_SL					fp_2851_51_eng.vsd	Function diagram	- 2851 -
SI Extended Functions - TM54F (F-DI 5 ... F-DI 9)					14.11.11 V04.05.00	SINAMICS	

Fig. 2-99 2851 – TM54F (F-DI 5 ... F-DI 9)

© Siemens AG 2012 All Rights Reserved

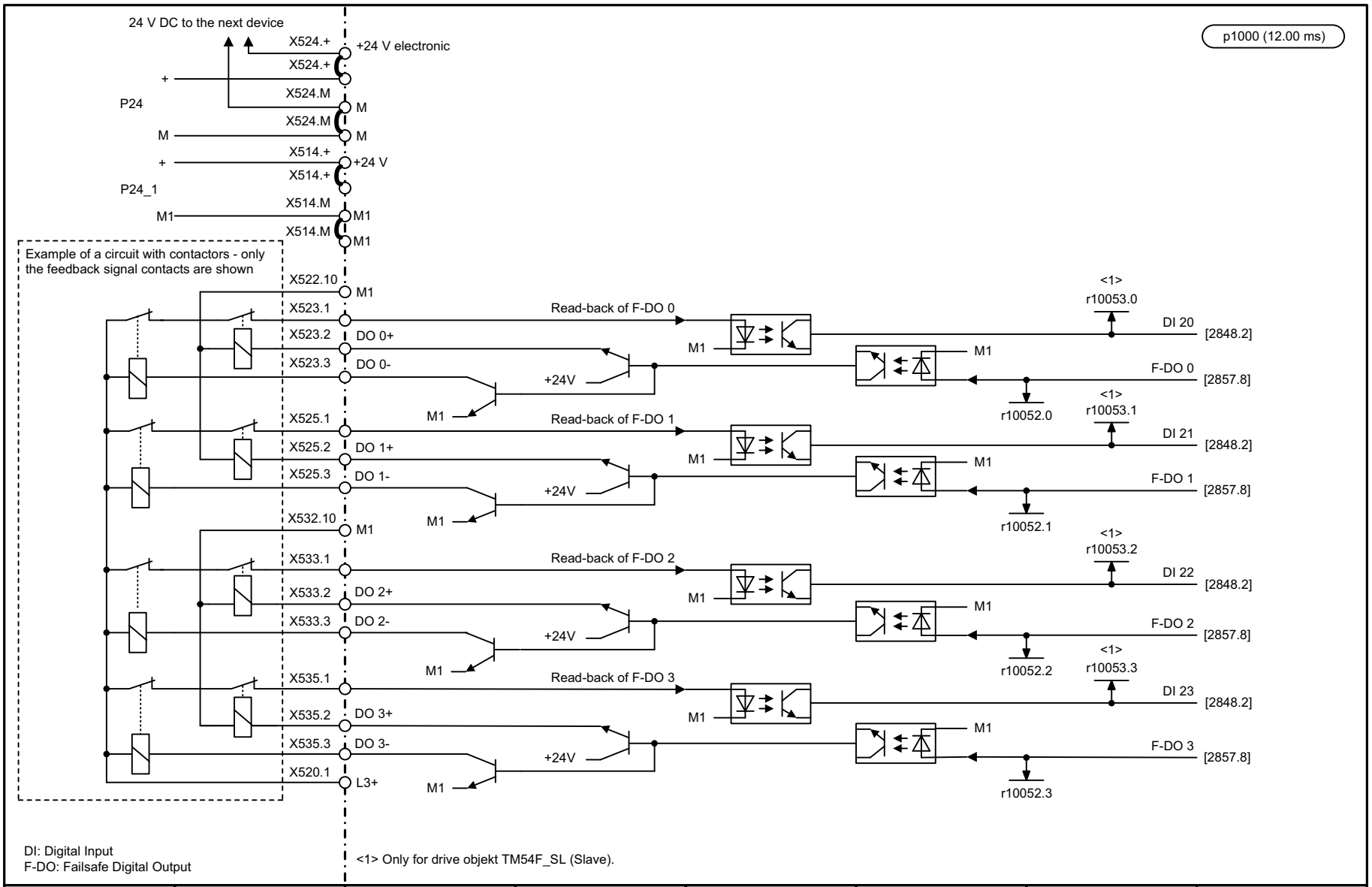

1	2	3	4	5	6	7	8
DO: TM54F_MA, TM54F_SL					fp_2853_51_eng.vsd	Function diagram	- 2853 -
SI Extended Functions - TM54F (F-DO 0 ... F-DO 3, DI 20 ... DI 23)					14.11.11 V04.05.00	SINAMICS	

Fig. 2-100 2853 – TM54F (F-DO 0 ... F-DO 3, DI 20 ... DI 23)

© Siemens AG 2012 All Rights Reserved

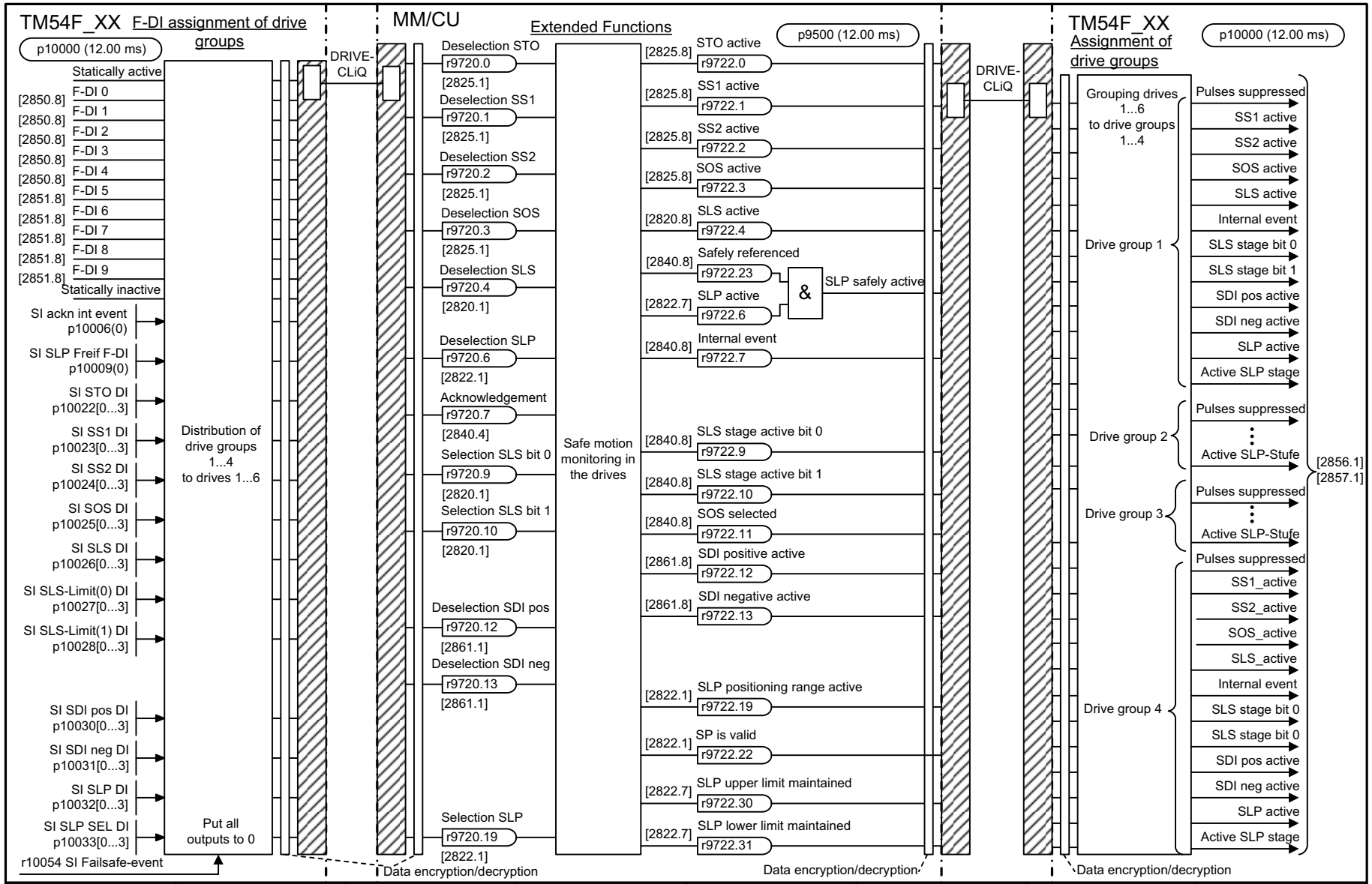

1	2	3	4	5	6	7	8
DO: TM54F_MA, TM54F_SL					fp_2855_51_eng.vsd	Function diagram	- 2855 -
SI Extended Functions - TM54F control interface (p9601.2 = 1 & p9601.3 = 0)					14.11.11 V04.05.00	SINAMICS	

Fig. 2-101 2855 – TM54F control interface (p9601.2 = 1 & p9601.3 = 0)

© Siemens AG 2012 All Rights Reserved

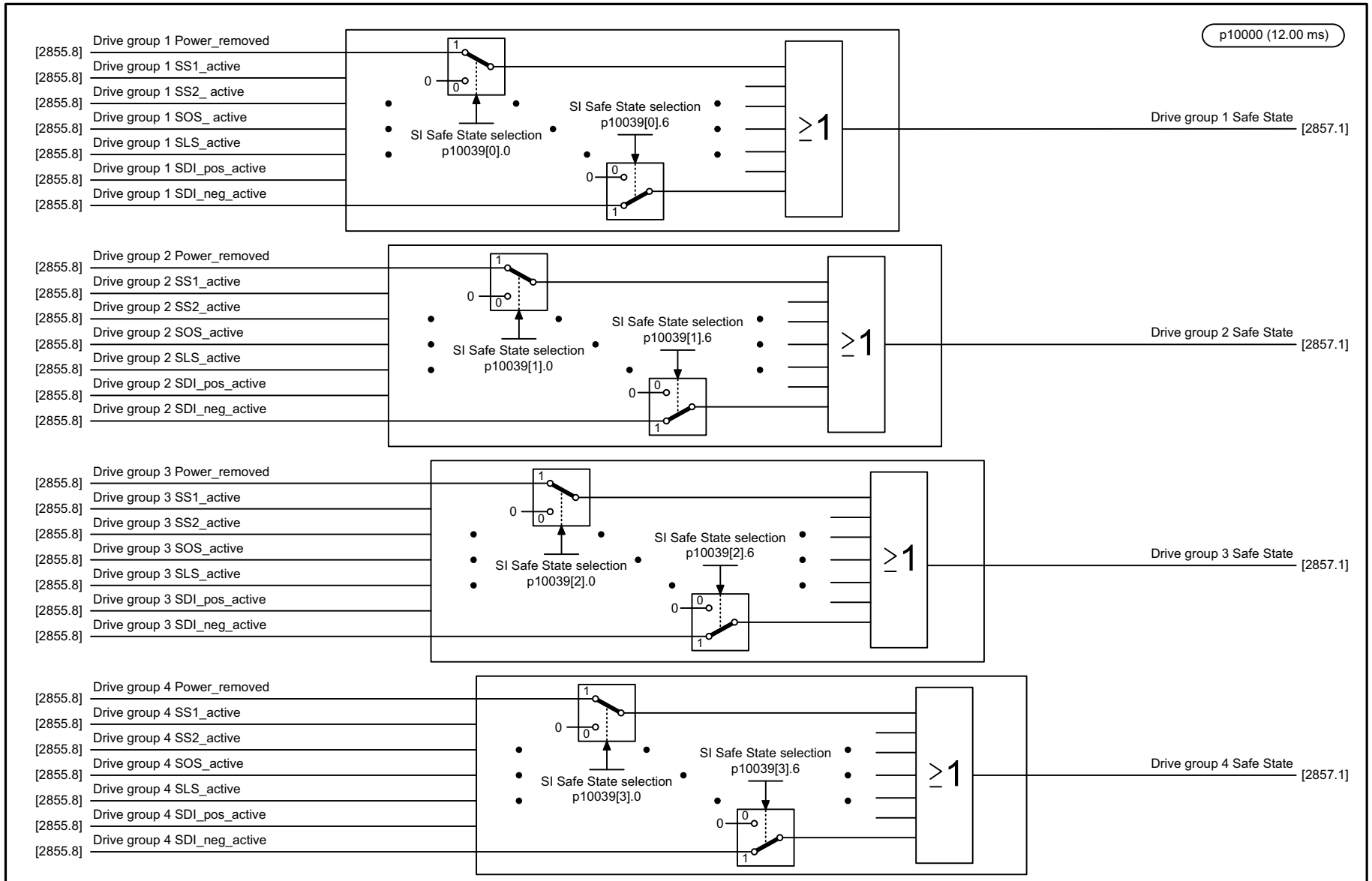

Fig. 2-102 2856 – TM54F Safe State selection

1	2	3	4	5	6	7	8
DO: TM54F_MA, TM54F_SL					fp_2856_51_eng.vsd	Function diagram	- 2856 -
SI Extended Functions - TM54F Safe State selection					14.11.11 V04.05.00	SINAMICS	

© Siemens AG 2012 All Rights Reserved

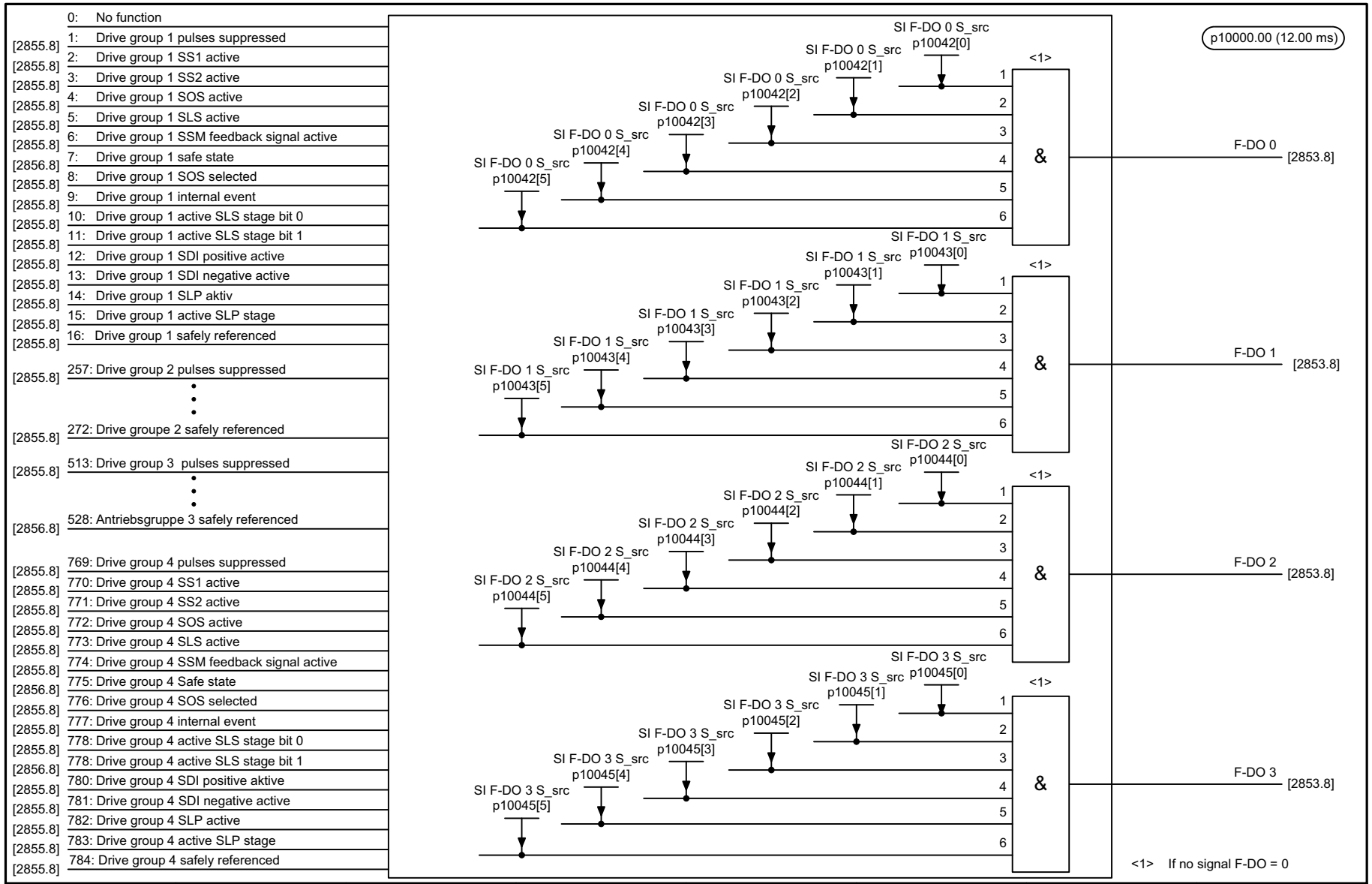

Fig. 2-103 2857 – TM54F assignment (F-DO 0 ... F-DO 3)

1	2	3	4	5	6	7	8
DO: TM54F_MA, TM54F_SL					fp_2857_51_eng.vsd	Function diagram	- 2857 -
SI Extended Functions - TM54F assignment (F-DO 0 ... F-DO 3)					14.11.11 V04.05.00	SINAMICS	

© Siemens AG 2012 All Rights Reserved

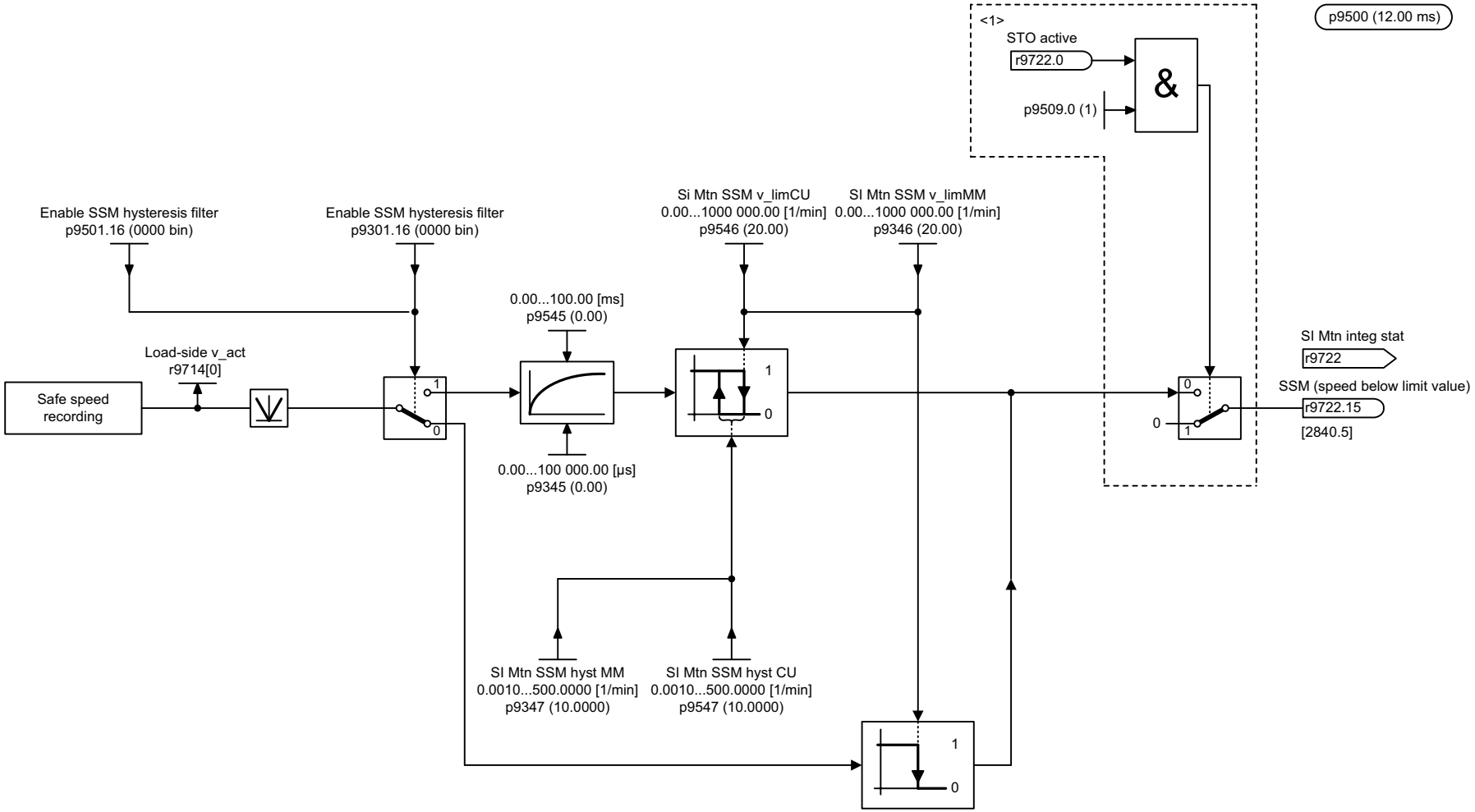

<1> Only for p9506 = 1 or 3 “Safety without encoder“.

1	2	3	4	5	6	7	8
DO: SERVO, VECTOR					fp_2860_54_eng.vsd	Function diagram	- 2860 -
SI Extended Functions - SSM (Safe Speed Monitor)					14.11.11 V04.05.00	S120/S150/G130/G150	

Fig. 2-104 2860 – SSM (Safe Speed Monitor)

© Siemens AG 2012 All Rights Reserved

Fig. 2-105 2861 – SDI (Safe Direction)

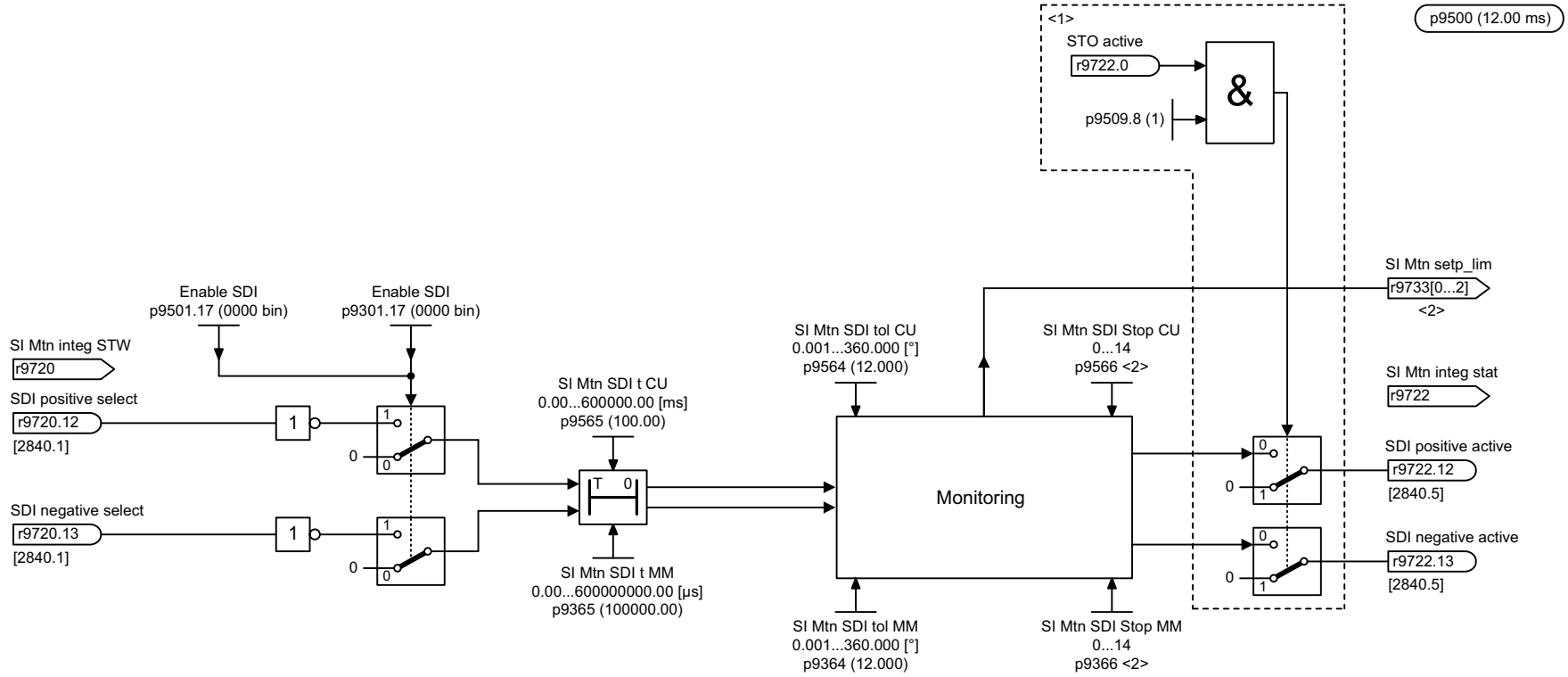

<1> Only for p9506 = 1 or 3 “Safety without encoder“.

<2>

Selected SI-Function	r9733[0] Setpoint limiting positive	r9733[1] Setpoint limiting negative	r9733[2] Setpoint limit absolute
SDI positive	p1082	0	|p1082|
SDI negative	0	–p1082	|p1082|
SDI positive + SLSx	p9531[x] x p9533	0	|p9531[x] x p9533|
SDI negativ + SLSx	0	–p9531[x] x p9533	|p9531[x] x p9533|

1	2	3	4	5	6	7	8
DO: SERVO, VECTOR					fp_2861_54_eng.vsd	Function diagram	- 2861 -
SI Extended Functions - SDI (Safe Direction)					14.11.11 V04.05.00	S120/S150/G130/G150	

© Siemens AG 2012 All Rights Reserved

2.12 Setpoint channel

Function diagrams

3010 – Fixed speed setpoints	2-1097
3020 – Motorized potentiometer	2-1098
3030 – Main/supplementary setpoint, setpoint scaling, jogging	2-1099
3040 – Direction limitation and direction reversal	2-1100
3050 – Skip frequency bands and speed limitations	2-1101
3060 – Basic ramp-function generator	2-1102
3070 – Extended ramp-function generator	2-1103
3080 – Ramp-function generator selection, status word, tracking	2-1104

© Siemens AG 2012 All Rights Reserved

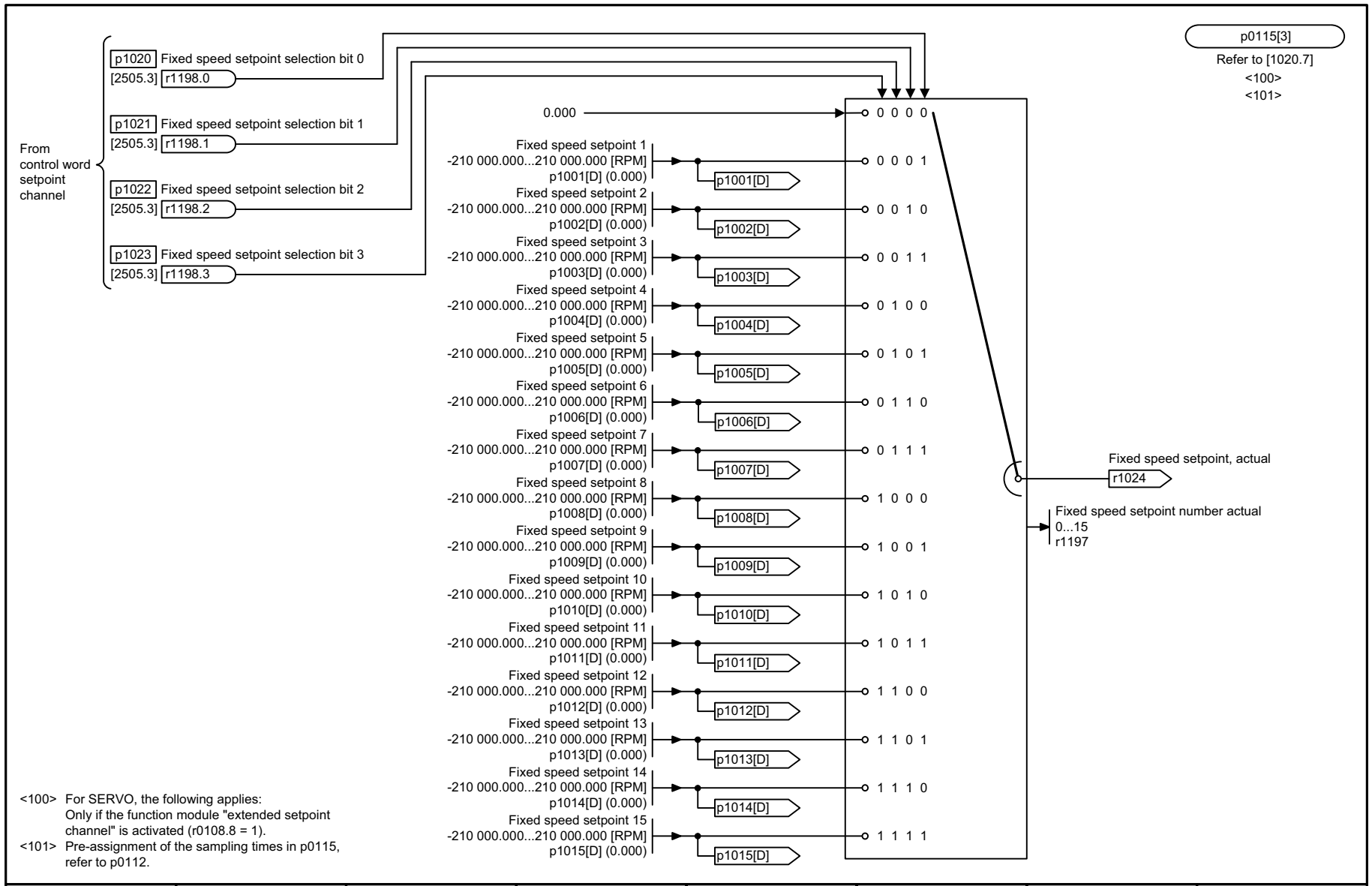

<100> For SERVO, the following applies:
Only if the function module "extended setpoint channel" is activated (r0108.8 = 1).

<101> Pre-assignment of the sampling times in p0115, refer to p0112.

1	2	3	4	5	6	7	8
DO: SERVO, VECTOR, VECTORGL, VECTORMV, VECTORSL					fp_3010_51_eng.vsd	Function diagram	- 3010 -
Setpoint channel - Fixed speed setpoints					29.06.09 V04.05.00	SINAMICS	

Fig. 2-106 3010 – Fixed speed setpoints

© Siemens AG 2012 All Rights Reserved

Fig. 2-107 3020 – Motorized potentiometer

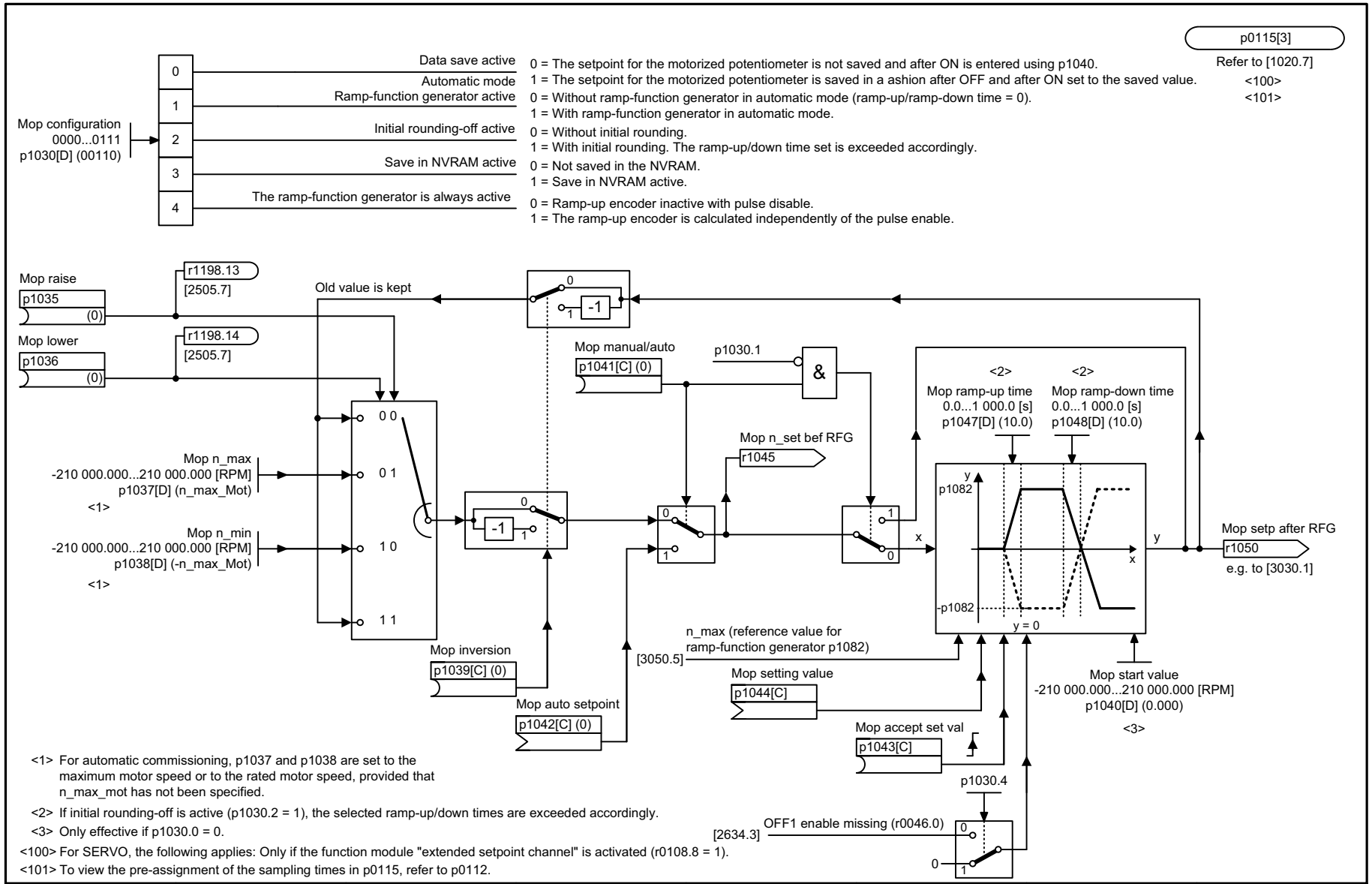

<1> For automatic commissioning, p1037 and p1038 are set to the maximum motor speed or to the rated motor speed, provided that n_max_mot has not been specified.

<2> If initial rounding-off is active (p1030.2 = 1), the selected ramp-up/down times are exceeded accordingly.

<3> Only effective if p1030.0 = 0.

<100> For SERVO, the following applies: Only if the function module "extended setpoint channel" is activated (r0108.8 = 1).

<101> To view the pre-assignment of the sampling times in p0115, refer to p0112.

1	2	3	4	5	6	7	8
DO: SERVO, VECTOR, VECTORGL, VECTORMV, VECTORSL					fp_3020_51_eng.vsd	Function diagram	- 3020 -
Setpoint channel - Motorized potentiometer					29.10.10 V04.05.00	SINAMICS	

© Siemens AG 2012 All Rights Reserved

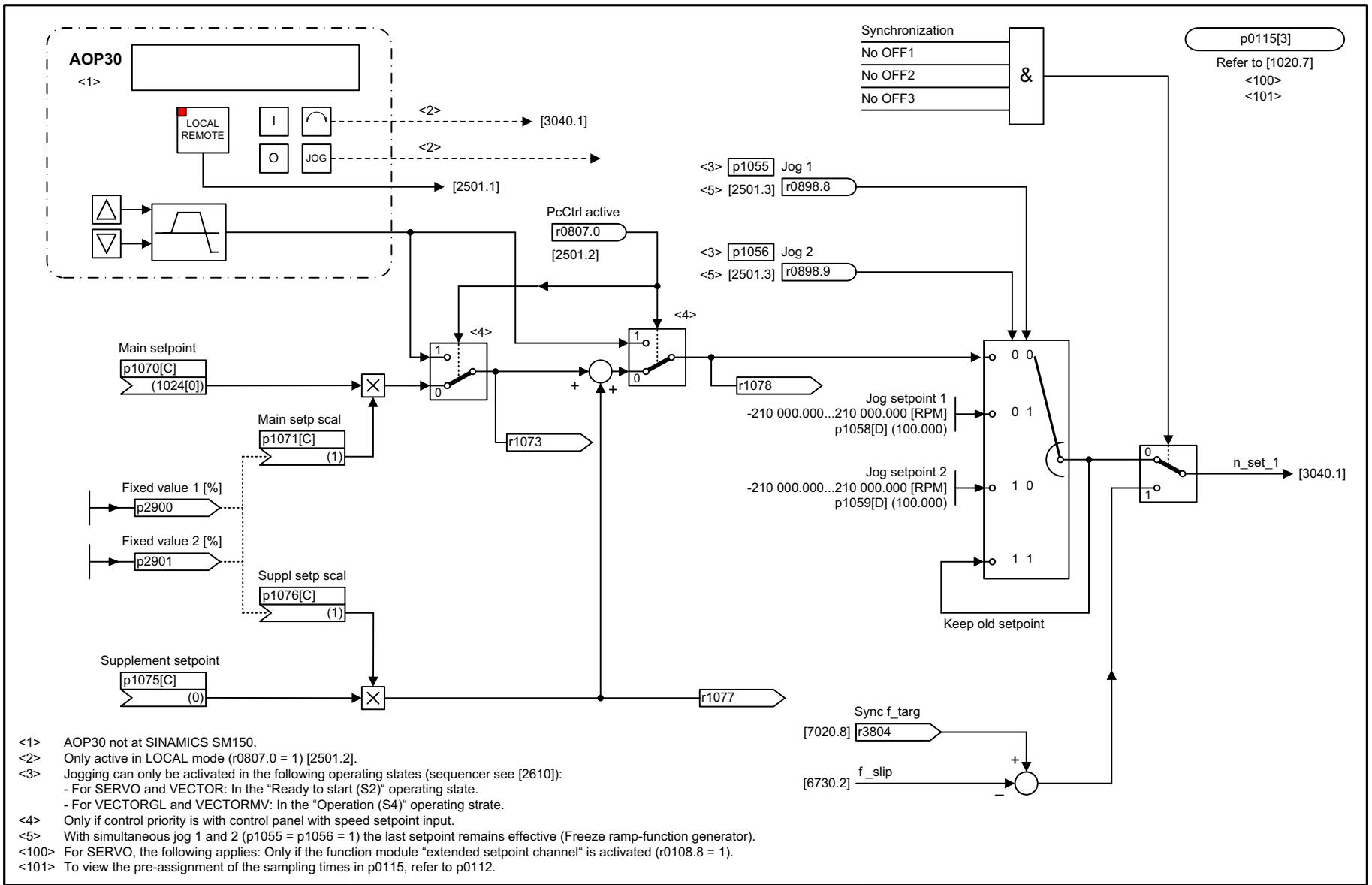

<1> AOP30 not at SINAMICS SM150.
<2> Only active in LOCAL mode (r0807.0 = 1) [2501.2].
<3> Jogging can only be activated in the following operating states (sequencer see [2610]):
- For SERVO and VECTOR: In the “Ready to start (S2)“ operating state.
- For VECTORGL and VECTORMV: In the “Operation (S4)“ operating strate.
<4> Only if control priority is with control panel with speed setpoint input.
<5> With simultaneous jog 1 and 2 (p1055 = p1056 = 1) the last setpoint remains effective (Freeze ramp-function generator).
<100> For SERVO, the following applies: Only if the function module “extended setpoint channel“ is activated (r0108.8 = 1).
<101> To view the pre-assignment of the sampling times in p0115, refer to p0112.

1	2	3	4	5	6	7	8
DO: SERVO, VECTOR, VECTORGL, VECTORMV, VECTORSL					fp_3030_51_eng.vsd	Function diagram	- 3030 -
Setpoint channel - Main setpoint/supplementary setpoint, setpoint scaling, jogging					14.11.11 V04.05.00	SINAMICS	

Fig. 2-108 3030 – Main/supplementary setpoint, setpoint scaling, jogging

© Siemens AG 2012 All Rights Reserved

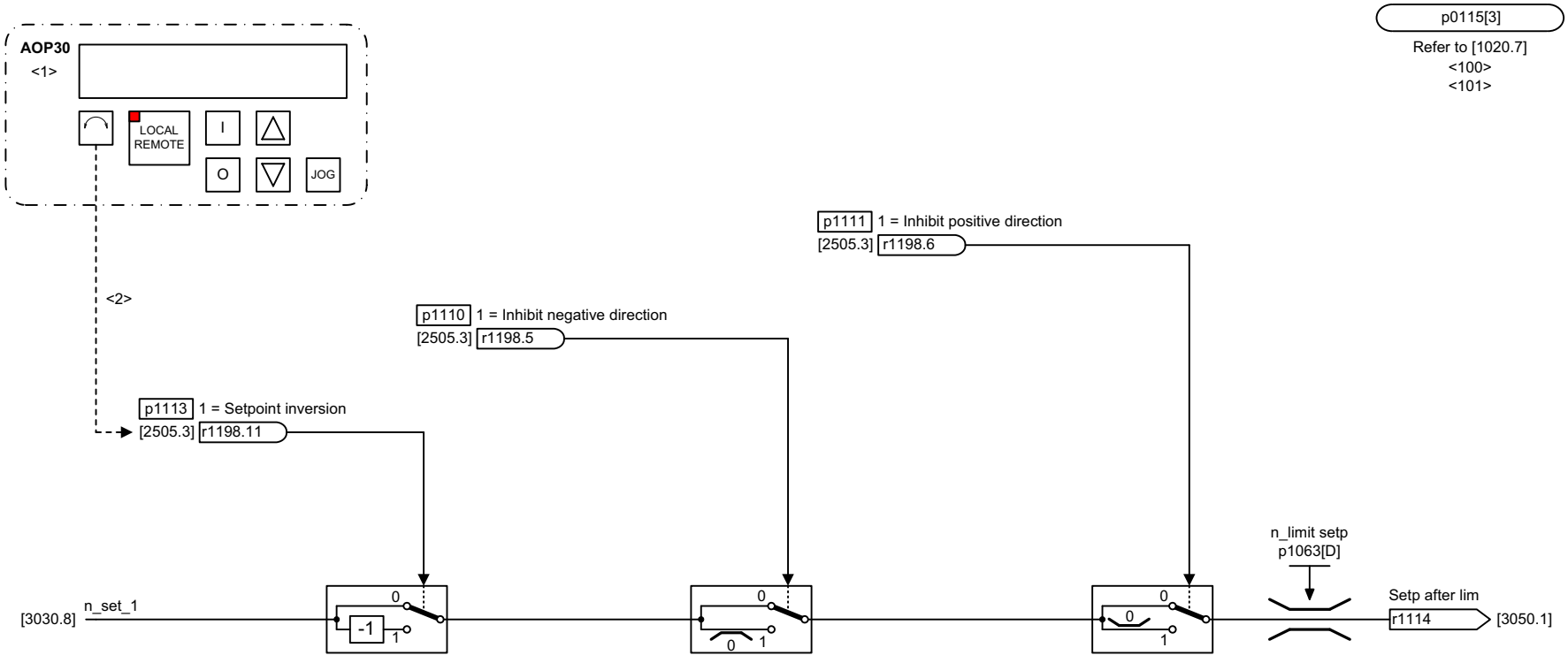

<1> AOP30 not at SINAMICS SM150.
<2> Only active in LOCAL mode (r0807.0 = 1) [2501.2]
<100> For SERVO, the following applies: Only if the function module “extended setpoint channel“ is activated (r0108.8 = 1).
<101> To view the pre-assignment of the sampling times in p0115, refer to p0112.

1	2	3	4	5	6	7	8
DO: SERVO, VECTOR, VECTORGL, VECTORMV, VECTORSL					fp_3040_51_eng.vsd	Function diagram	- 3040 -
Setpoint channel - Direction limitation and direction reversal					29.06.09 V04.05.00	SINAMICS	

Fig. 2-109 3040 – Direction limitation and direction reversal

© Siemens AG 2012 All Rights Reserved

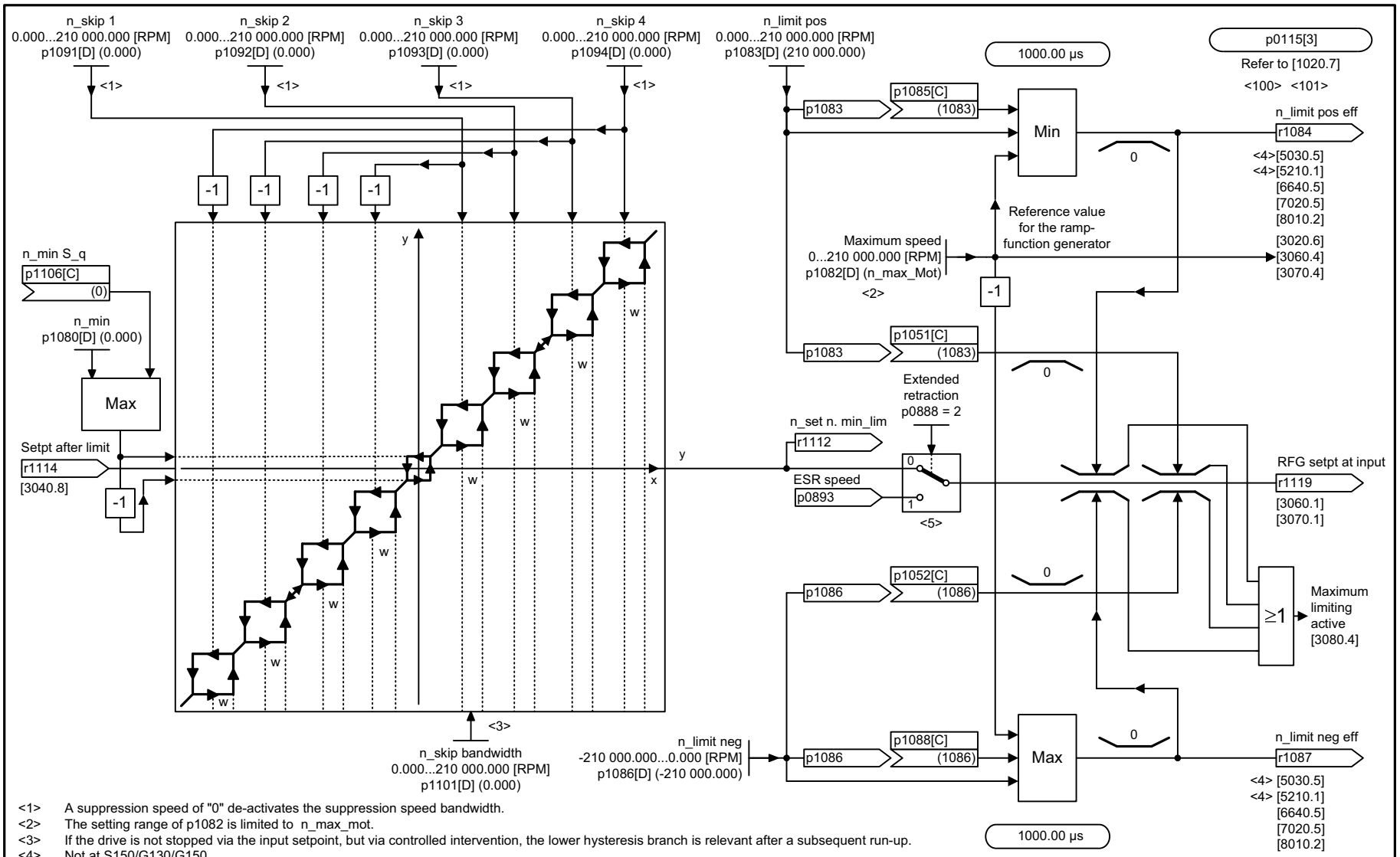

<1> A suppression speed of "0" de-activates the suppression speed bandwidth.
<2> The setting range of p1082 is limited to n_max_mot.
<3> If the drive is not stopped via the input setpoint, but via controlled intervention, the lower hysteresis branch is relevant after a subsequent run-up.
<4> Not at S150/G130/G150.
<5> For SERVO, the following applies: Only if the function module "Extended Stop and Retract" is activated (r0108.9 = 1).
<100> For SERVO, the following applies: Only if the function module "Extended setpoint channel" is activated (r0108.8 = 1). For r0108.8 = 0, [3095] applies for the generation of the speed limits.
<101> To view the pre-assignment of the sampling times in p0115, refer to p0112.

1	2	3	4	5	6	7	8
DO: SERVO, VECTOR, VECTORGL, VECTORMV, VECTORSL					fp_3050_51_eng.vsd	Function diagram	- 3050 -
Setpoint channel - Skip frequency bands and speed limitations					22.11.11 V04.05.00	SINAMICS	

Fig. 2-110 3050 – Skip frequency bands and speed limitations

© Siemens AG 2012 All Rights Reserved

Fig. 2-111 3060 – Basic ramp-function generator

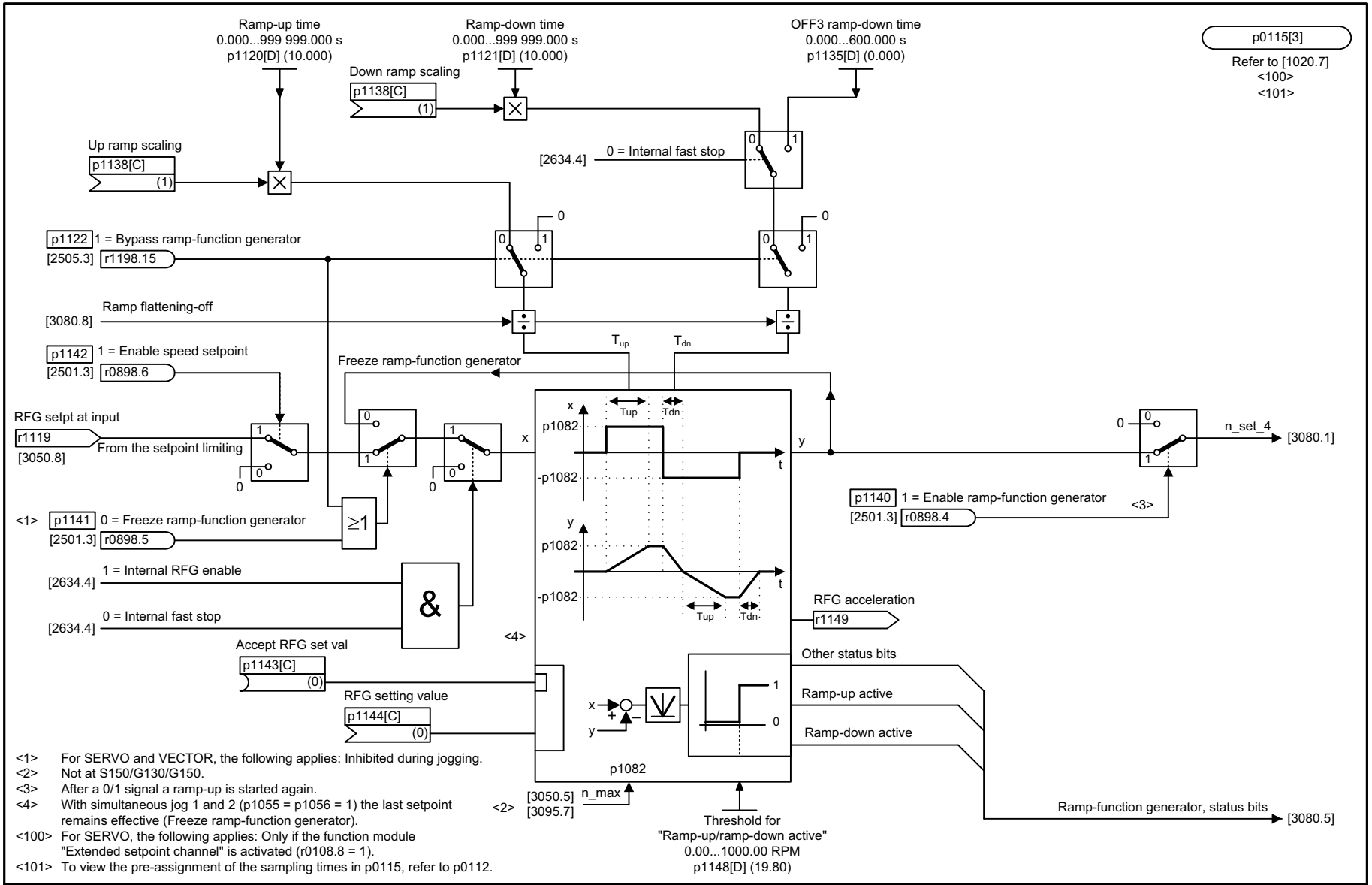

<1> For SERVO and VECTOR, the following applies: Inhibited during jogging.
<2> Not at S150/G130/G150.
<3> After a 0/1 signal a ramp-up is started again.
<4> With simultaneous jog 1 and 2 (p1055 = p1056 = 1) the last setpoint remains effective (Freeze ramp-function generator).
<100> For SERVO, the following applies: Only if the function module "Extended setpoint channel" is activated (r0108.8 = 1).
<101> To view the pre-assignment of the sampling times in p0115, refer to p0112.

1	2	3	4	5	6	7	8
DO: SERVO, VECTOR, VECTORGL, VECTORMV, VECTORSL					fp_3060_51_eng.vsd	Function diagram	- 3060 -
Setpoint channel - Basic ramp-function generator					24.10.11 V04.05.00	SINAMICS	

© Siemens AG 2012 All Rights Reserved

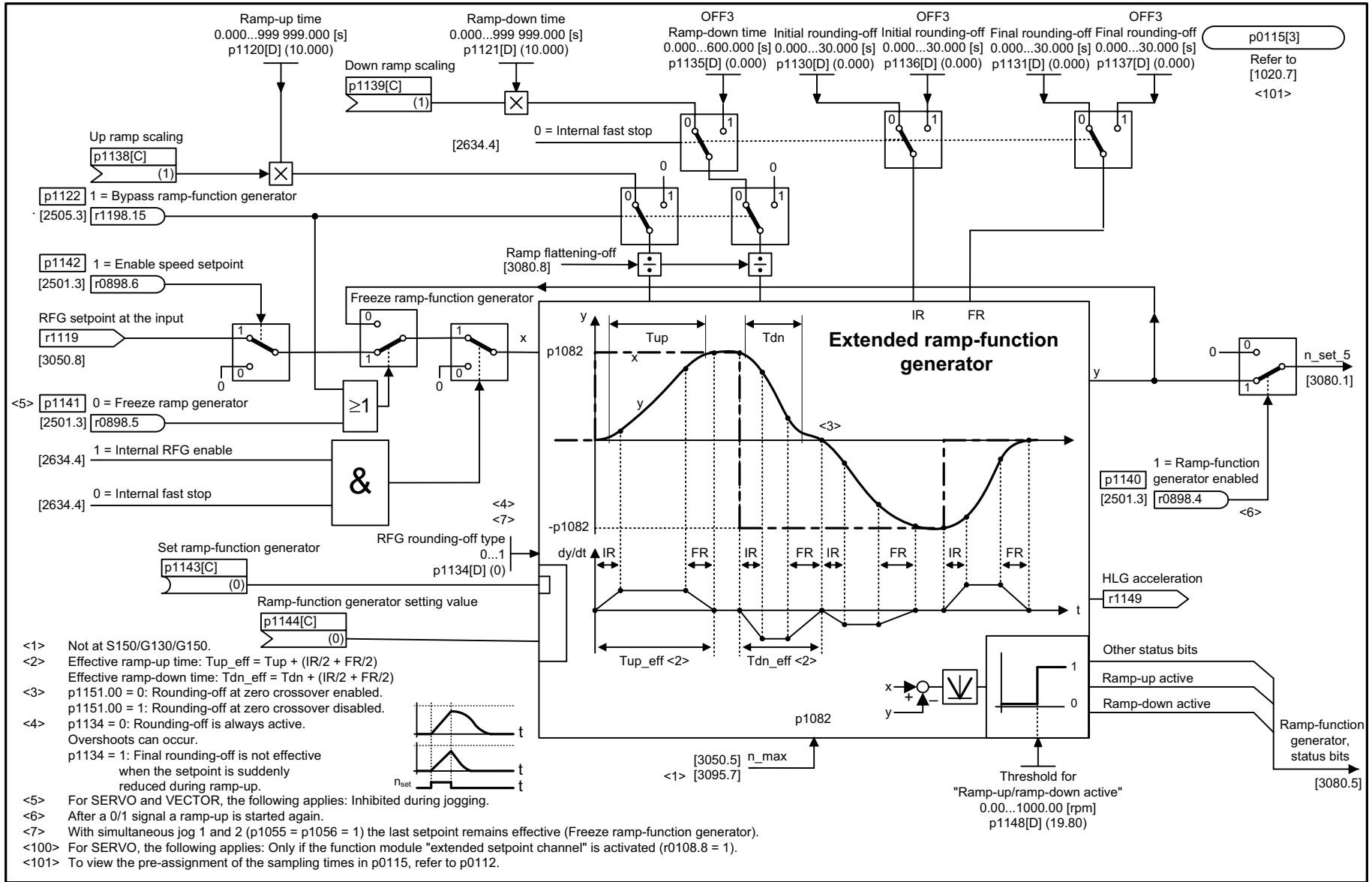

<1> Not at S150/G130/G150.
<2> Effective ramp-up time: Tup_eff = Tup + (IR/2 + FR/2)
Effective ramp-down time: Tdn_eff = Tdn + (IR/2 + FR/2)
<3> p1151.00 = 0: Rounding-off at zero crossover enabled.
p1151.00 = 1: Rounding-off at zero crossover disabled.
<4> p1134 = 0: Rounding-off is always active.
Overshoots can occur.
p1134 = 1: Final rounding-off is not effective when the setpoint is suddenly reduced during ramp-up.
<5> For SERVO and VECTOR, the following applies: Inhibited during jogging.
<6> After a 0/1 signal a ramp-up is started again.
<7> With simultaneous jog 1 and 2 (p1055 = p1056 = 1) the last setpoint remains effective (Freeze ramp-function generator).
<100> For SERVO, the following applies: Only if the function module "extended setpoint channel" is activated (r0108.8 = 1).
<101> To view the pre-assignment of the sampling times in p0115, refer to p0112.

1	2	3	4	5	6	7	8
DO: SERVO, VECTOR, VECTORGL, VECTORMV, VECTORSL					fp_3070_51_eng.vsd	Function diagram	- 3070 -
Setpoint channel - Extended ramp-function generator					24.10.11 V04.05.00	SINAMICS	

Fig. 2-112 3070 – Extended ramp-function generator

© Siemens AG 2012 All Rights Reserved

Fig. 2-113 3080 – Ramp-function generator selection, status word, tracking

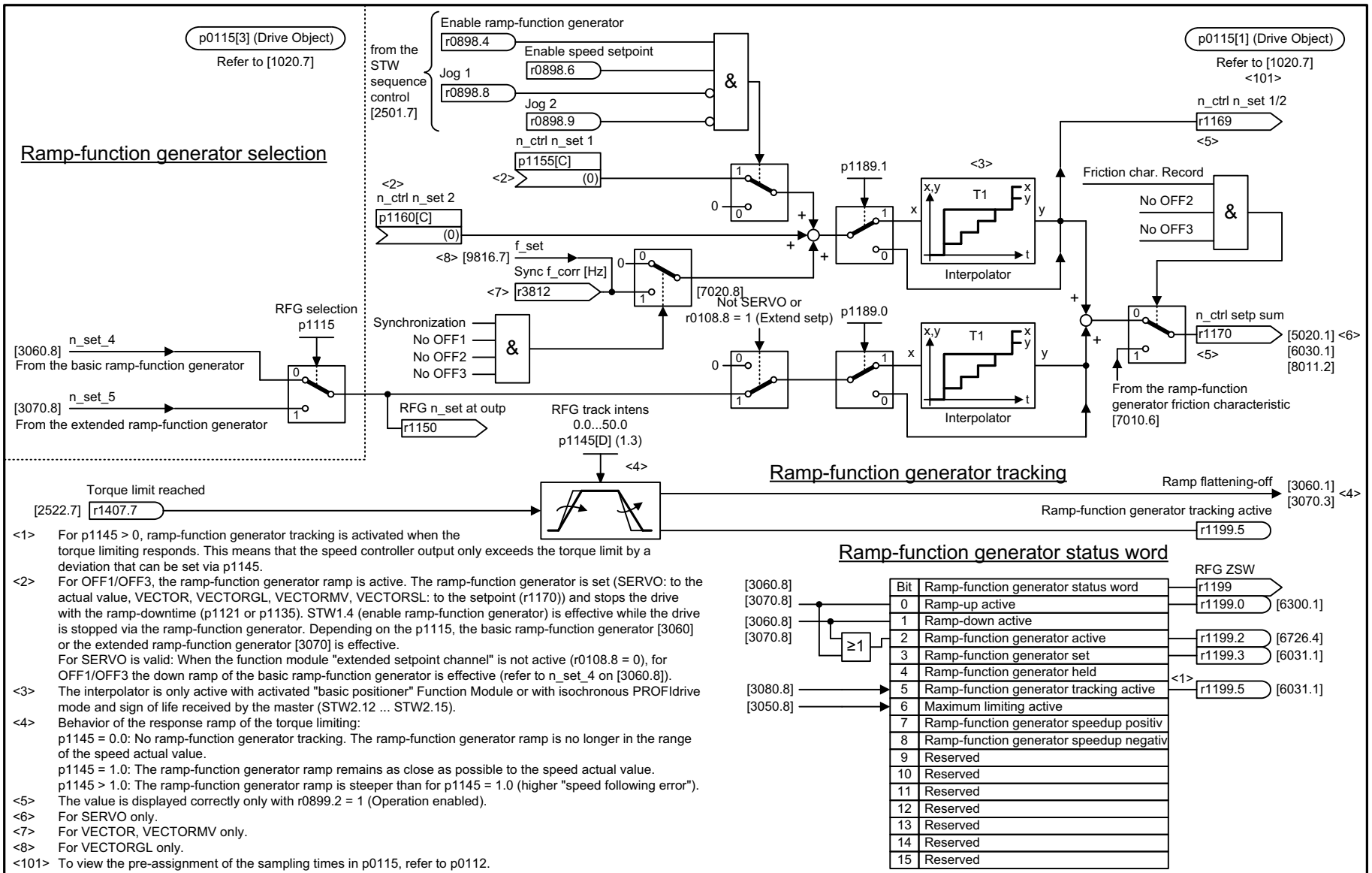

Bit	Ramp-function generator status word
0	Ramp-up active
1	Ramp-down active
2	Ramp-function generator active
3	Ramp-function generator set
4	Ramp-function generator held
5	Ramp-function generator tracking active
6	Maximum limiting active
7	Ramp-function generator speedup positiv
8	Ramp-function generator speedup negativ
9	Reserved
10	Reserved
11	Reserved
12	Reserved
13	Reserved
14	Reserved
15	Reserved

<1> For p1145 > 0, ramp-function generator tracking is activated when the torque limiting responds. This means that the speed controller output only exceeds the torque limit by a deviation that can be set via p1145.

<2> For OFF1/OFF3, the ramp-function generator ramp is active. The ramp-function generator is set (SERVO: to the actual value, VECTOR, VECTORGL, VECTORMV, VECTORSL: to the setpoint (r1170)) and stops the drive with the ramp-downtime (p1121 or p1135). STW1.4 (enable ramp-function generator) is effective while the drive is stopped via the ramp-function generator. Depending on the p1115, the basic ramp-function generator [3060] or the extended ramp-function generator [3070] is effective.
For SERVO is valid: When the function module "extended setpoint channel" is not active (r0108.8 = 0), for OFF1/OFF3 the down ramp of the basic ramp-function generator is effective (refer to n_set_4 on [3060.8]).

<3> The interpolator is only active with activated "basic positioner" Function Module or with isochronous PROFIdrive mode and sign of life received by the master (STW2.12 ... STW2.15).

<4> Behavior of the response ramp of the torque limiting:
p1145 = 0.0: No ramp-function generator tracking. The ramp-function generator ramp is no longer in the range of the speed actual value.
p1145 = 1.0: The ramp-function generator ramp remains as close as possible to the speed actual value.
p1145 > 1.0: The ramp-function generator ramp is steeper than for p1145 = 1.0 (higher "speed following error").

<5> The value is displayed correctly only with r0899.2 = 1 (Operation enabled).

<6> For SERVO only.

<7> For VECTOR, VECTORMV only.

<8> For VECTORGL only.

<101> To view the pre-assignment of the sampling times in p0115, refer to p0112.

1	2	3	4	5	6	7	8
DO: SERVO, VECTOR, VECTORGL, VECTORMV, VECTORSL					fp_3080_51_eng.vsd	Function diagram	- 3080 -
Setpoint channel - Ramp-function generator selection, status word, tracking					04.08.11 V04.05.00	SINAMICS	

© Siemens AG 2012 All Rights Reserved
SINAMICS G130/G150 List Manual (LH2), 01/2012, A5E03263479A

2.13 Encoder evaluation

Function diagrams

4704 – Raw signal sensing	2-1106
4715 – Speed actual value and pole position sensing, motor encoder ASM/SM (encoder 1)	2-1107

© Siemens AG 2012 All Rights Reserved

Fig. 2-114 4704 – Raw signal sensing

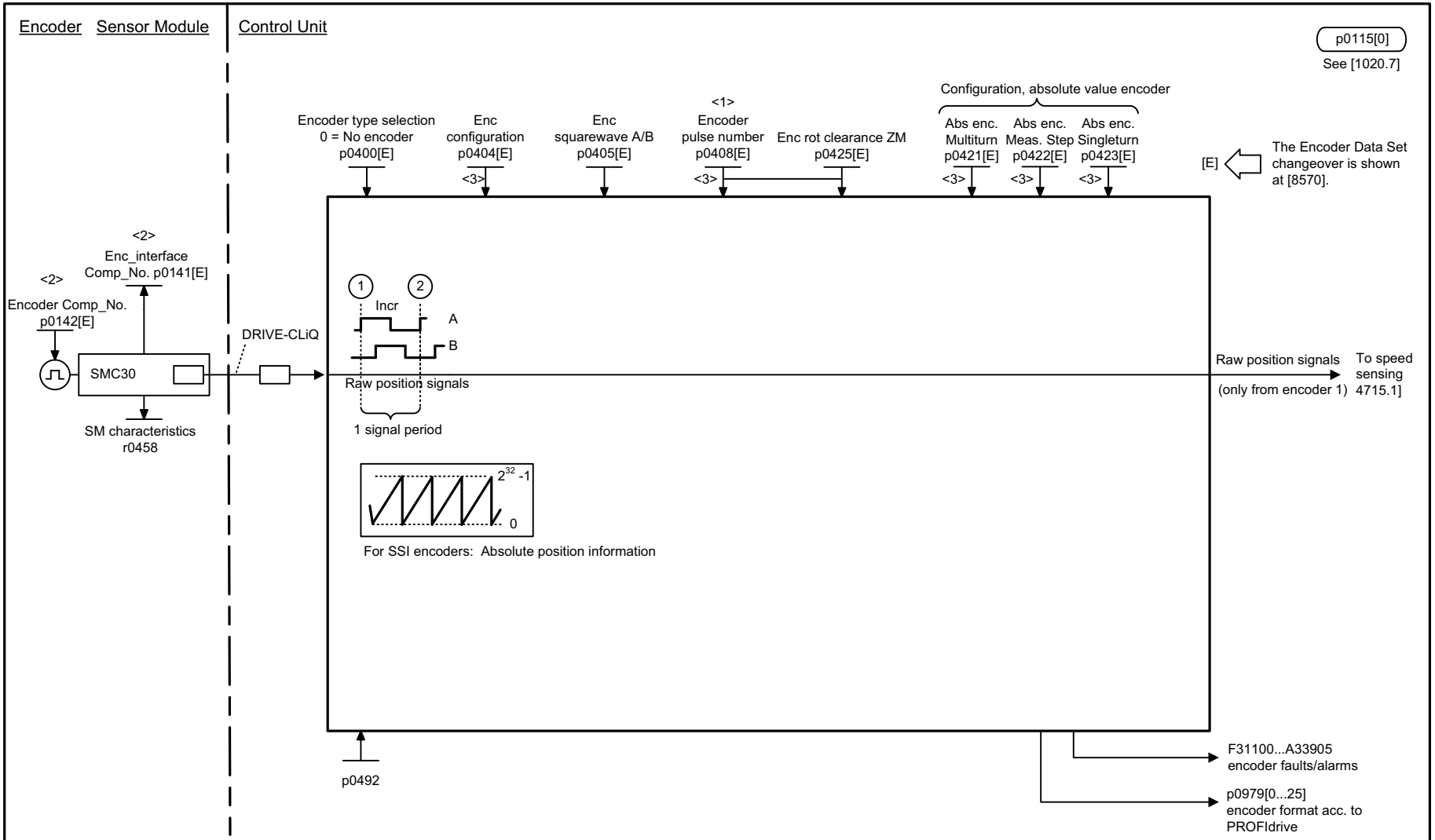

<1> For rotary encoders = pulse number setting.
For resolvers = pole pair number setting.
<2> p0142 = p0141 for motors with DRIVE-CLiQ.
<3> These parameters are automatically set.

1	2	3	4	5	6	7	8
DO: VECTOR					fp_4704_56_eng.vsd	Function diagram	- 4704 -
Encoder evaluation - Raw signal sensing					24.10.08 V04.05.00	SINAMICS G130/G150	

© Siemens AG 2012 All Rights Reserved

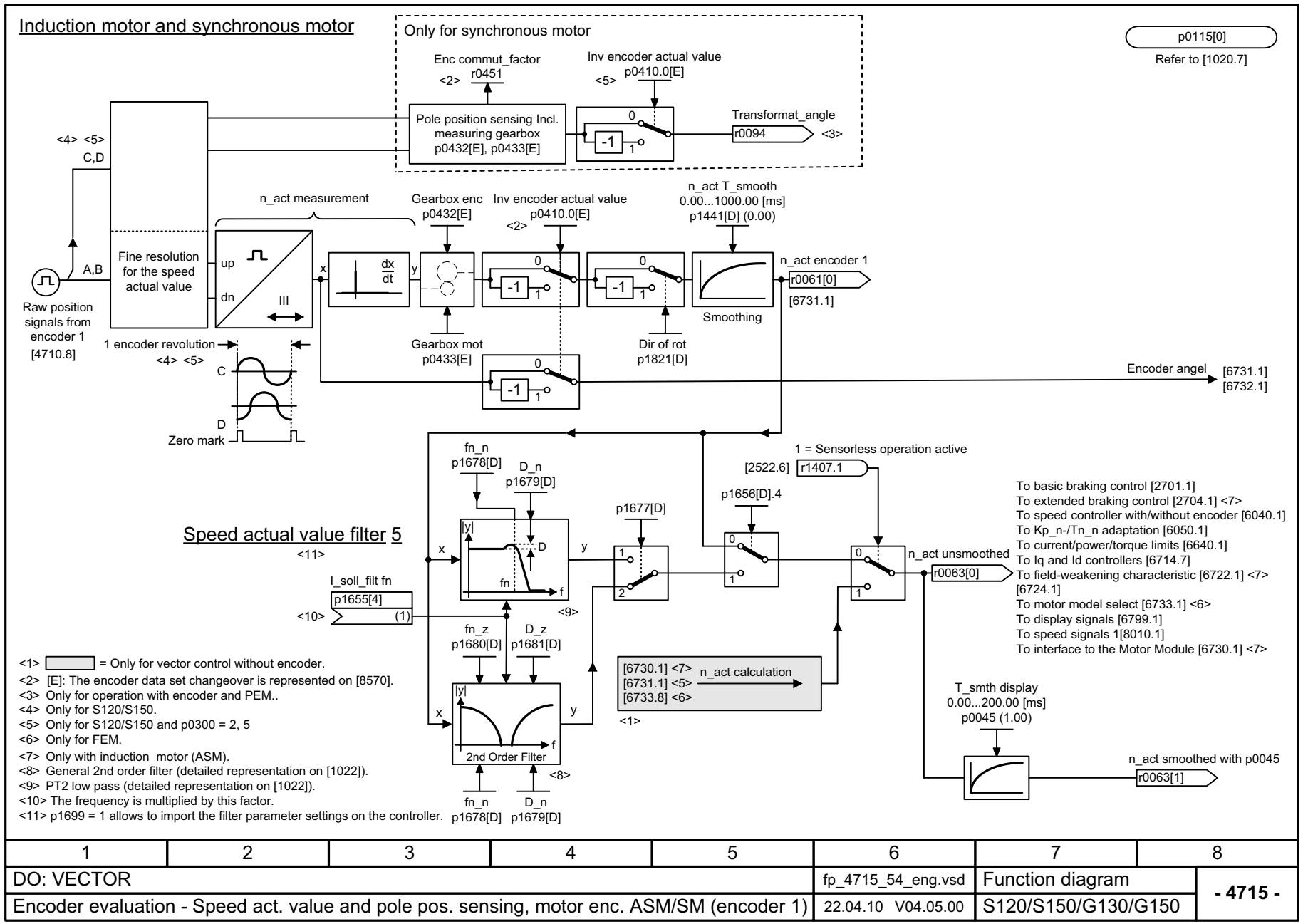

1	2	3	4	5	6	7	8
DO: VECTOR					fp_4715_54_eng.vsd	Function diagram	- 4715 -
Encoder evaluation - Speed act. value and pole pos. sensing, motor enc. ASM/SM (encoder 1)					22.04.10 V04.05.00	S120/S150/G130/G150	

Fig. 2-115 4715 – Speed actual value and pole position sensing, motor encoder ASM/SM (encoder 1)

© Siemens AG 2012 All Rights Reserved

2.14 Vector control

Function diagrams

6030 – Speed setpoint, droop	2-1109
6031 – Pre-control balancing, reference/acceleration model	2-1110
6040 – Speed controller with/without encoder	2-1111
6050 – Speed controller adaptation (Kp_n/Tn_n adaptation)	2-1112
6060 – Torque setpoint	2-1113
6220 – Vdc_max controller and Vdc_min controller	2-1114
6300 – V/f characteristic and voltage boost	2-1115
6310 – Resonance damping and slip compensation	2-1116
6320 – Vdc_max controller and Vdc_min controller (U/f)	2-1117
6490 – Speed control configuration	2-1118
6491 – Flux control configuration	2-1119
6630 – Upper/lower torque limit	2-1120
6640 – Current/power/torque limits	2-1121
6710 – Current setpoint filter	2-1122
6714 – Iq and Id controller	2-1123
6721 – Id setpoint (PEM, p0300 = 2)	2-1124
6722 – Field weakening characteristic, Id setpoint (ASM, p0300 = 1)	2-1125
6723 – Field weakening controller, flux controller (ASM, p0300 = 1)	2-1126
6724 – Field weakening controller (PEM, p0300 = 2)	2-1127
6730 – Interface to the Motor Module (ASM, p0300 = 1)	2-1128
6731 – Interface to the Motor Module (PEM, p0300 = 2)	2-1129
6799 – Display signals	2-1130

© Siemens AG 2012 All Rights Reserved

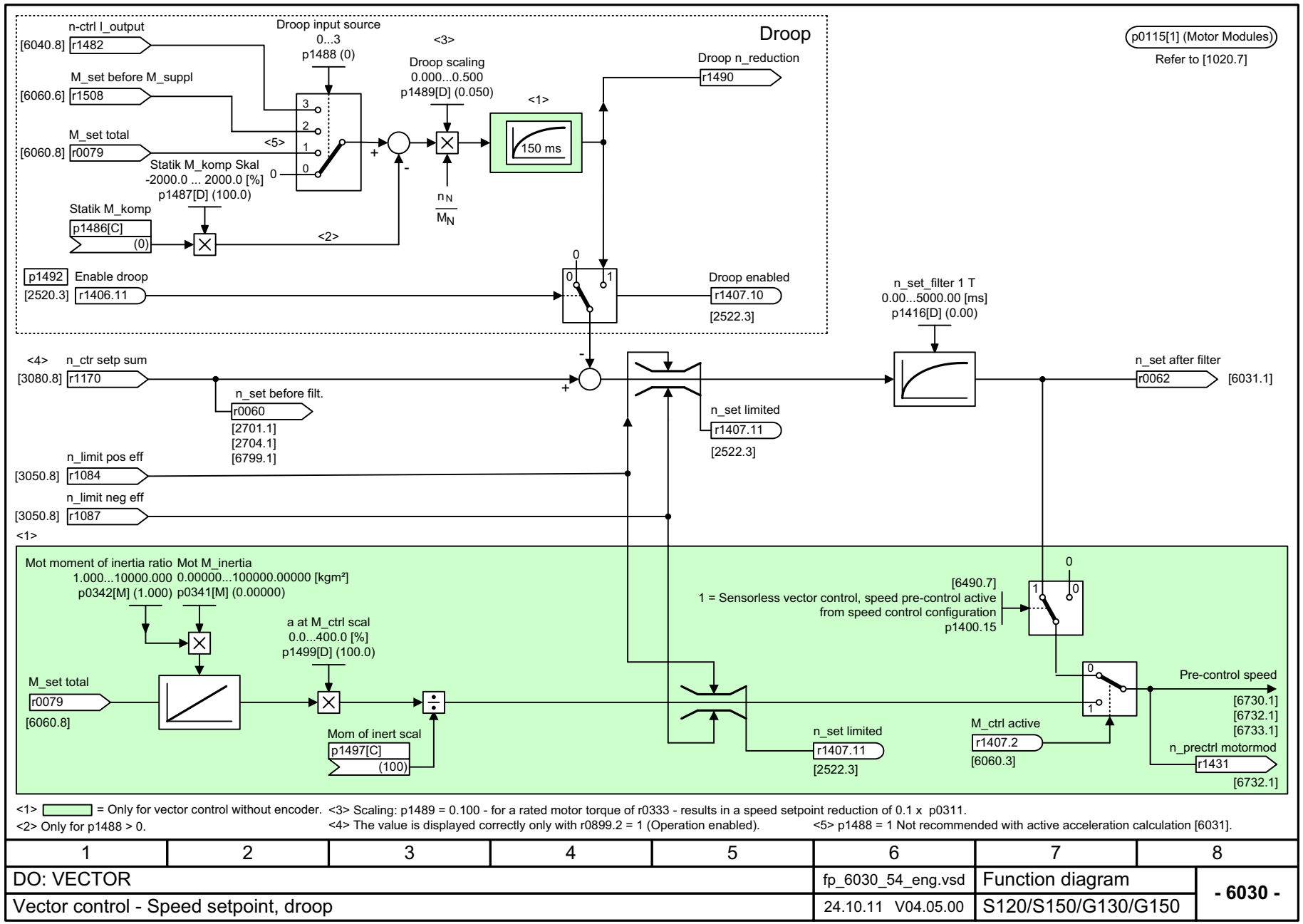

1	2	3	4	5	6	7	8
DO: VECTOR					fp_6030_54_eng.vsd	Function diagram	- 6030 -
Vector control - Speed setpoint, droop					24.10.11 V04.05.00	S120/S150/G130/G150	

Fig. 2-116 6030 – Speed setpoint, droop

© Siemens AG 2012 All Rights Reserved

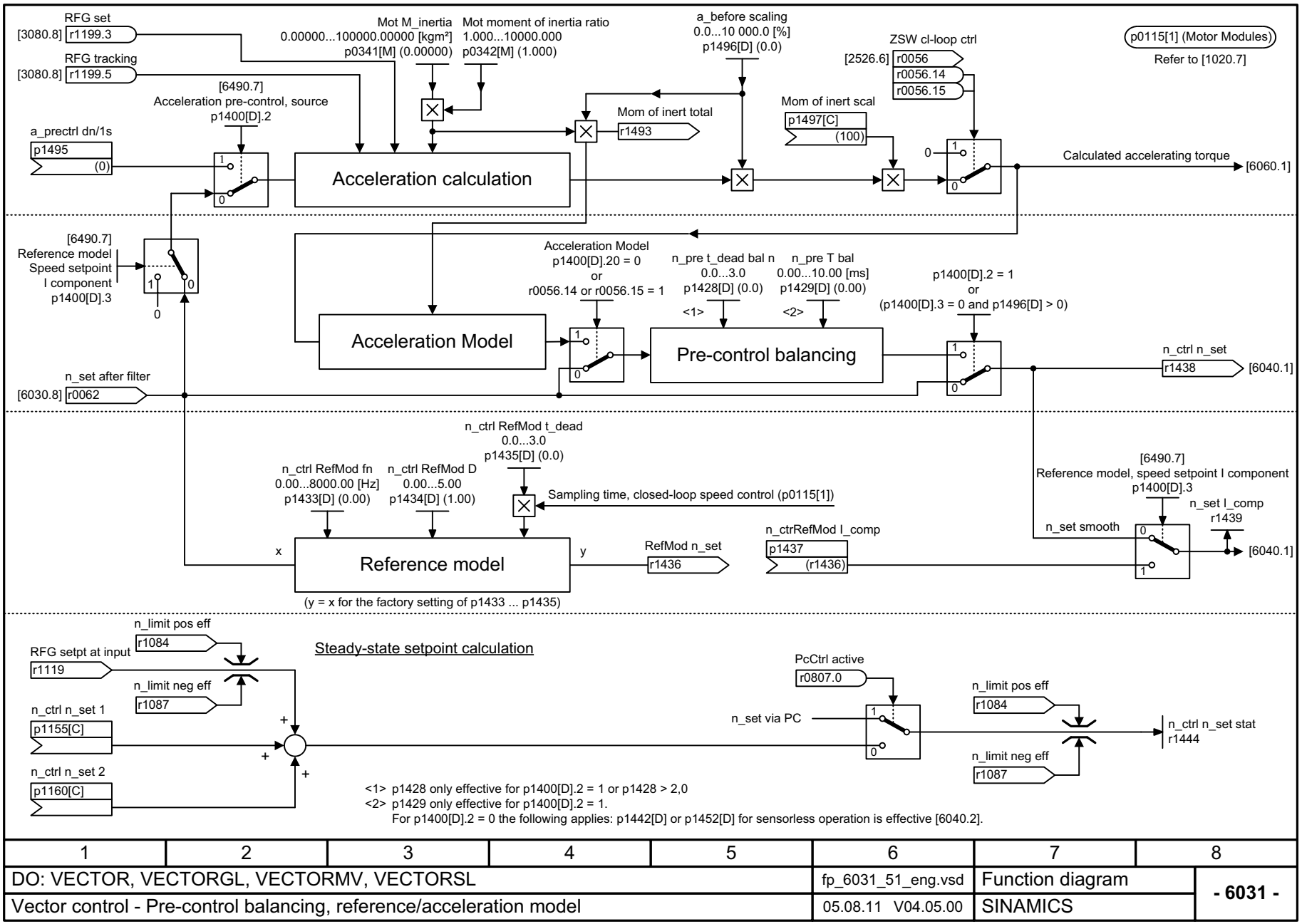

1	2	3	4	5	6	7	8
DO: VECTOR, VECTORGL, VECTORMV, VECTORSL					fp_6031_51_eng.vsd	Function diagram	- 6031 -
Vector control - Pre-control balancing, reference/acceleration model					05.08.11 V04.05.00	SINAMICS	

Fig. 2-117 6031 – Pre-control balancing, reference/acceleration model

© Siemens AG 2012 All Rights Reserved

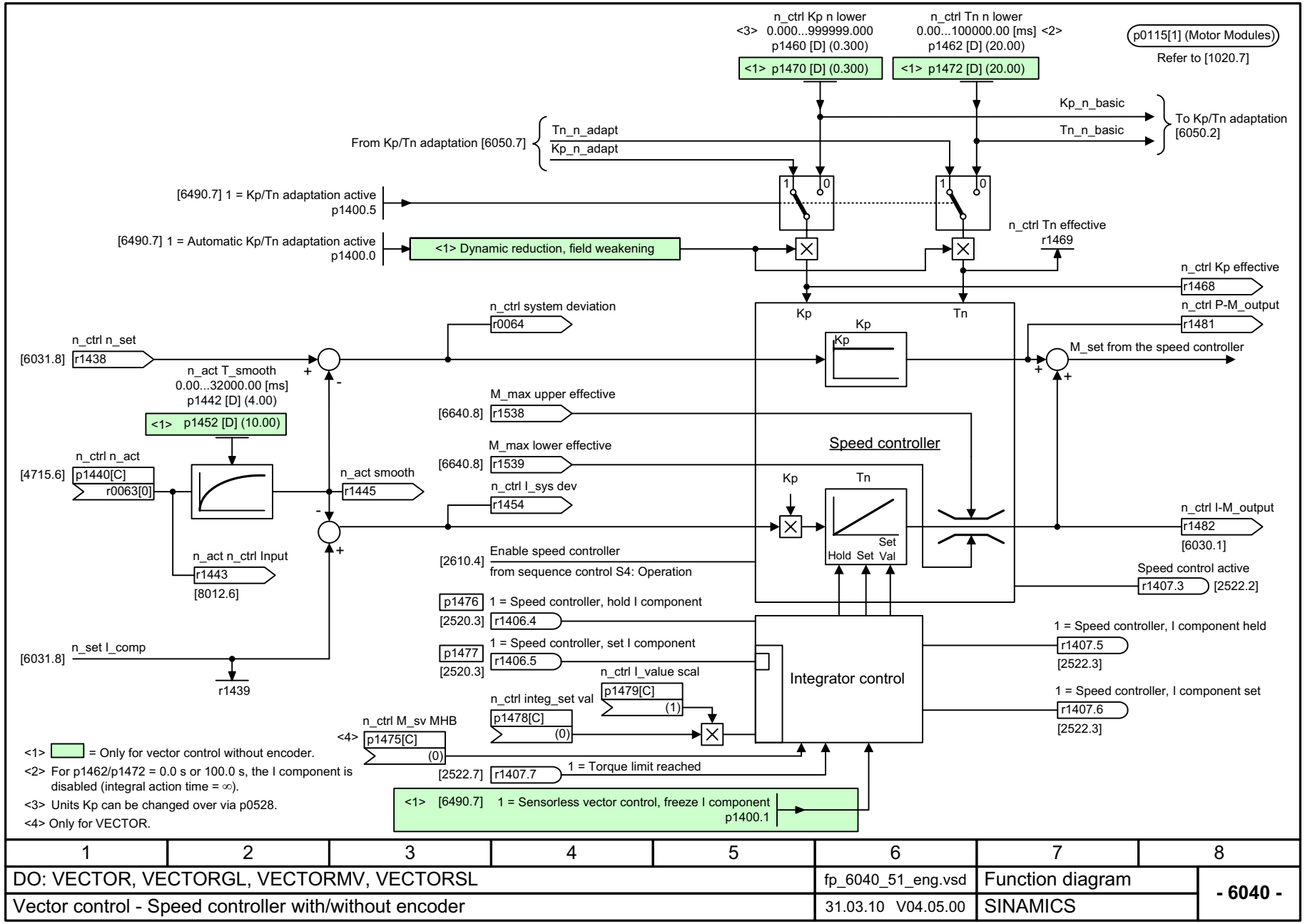

1	2	3	4	5	6	7	8
DO: VECTOR, VECTORGL, VECTORMV, VECTORSL					fp_6040_51_eng.vsd	Function diagram	- 6040 -
Vector control - Speed controller with/without encoder					31.03.10 V04.05.00	SINAMICS	

Fig. 2-118 6040 – Speed controller with/without encoder

© Siemens AG 2012 All Rights Reserved

Fig. 2-119 6050 – Speed controller adaptation (Kp_n/Tn_n adaptation)

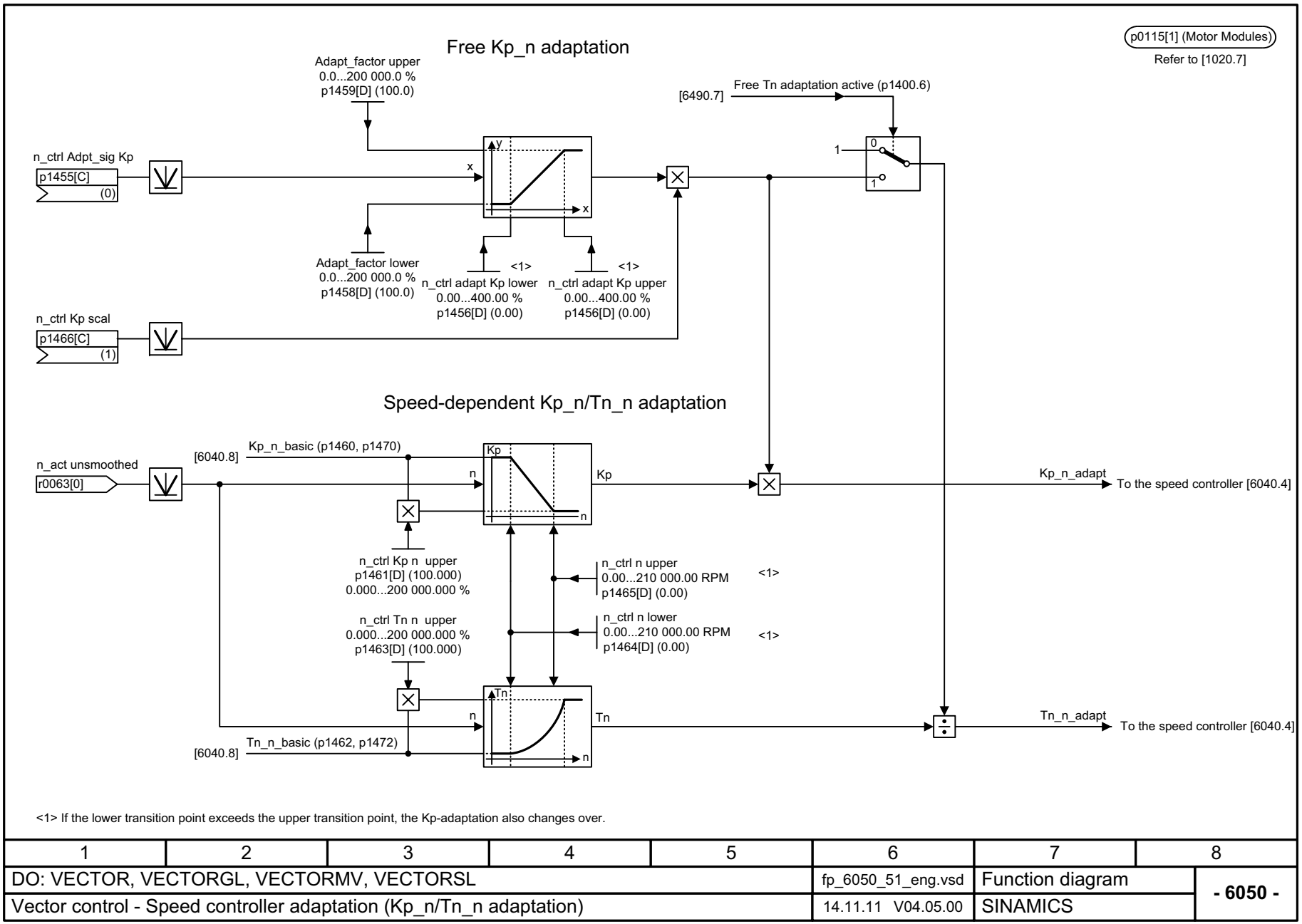

<1> If the lower transition point exceeds the upper transition point, the Kp-adaptation also changes over.

1	2	3	4	5	6	7	8
DO: VECTOR, VECTORGL, VECTORMV, VECTORSL					fp_6050_51_eng.vsd	Function diagram	- 6050 -
Vector control - Speed controller adaptation (Kp_n/Tn_n adaptation)					14.11.11 V04.05.00	SINAMICS	

© Siemens AG 2012 All Rights Reserved

Fig. 2-120 6060 – Torque setpoint

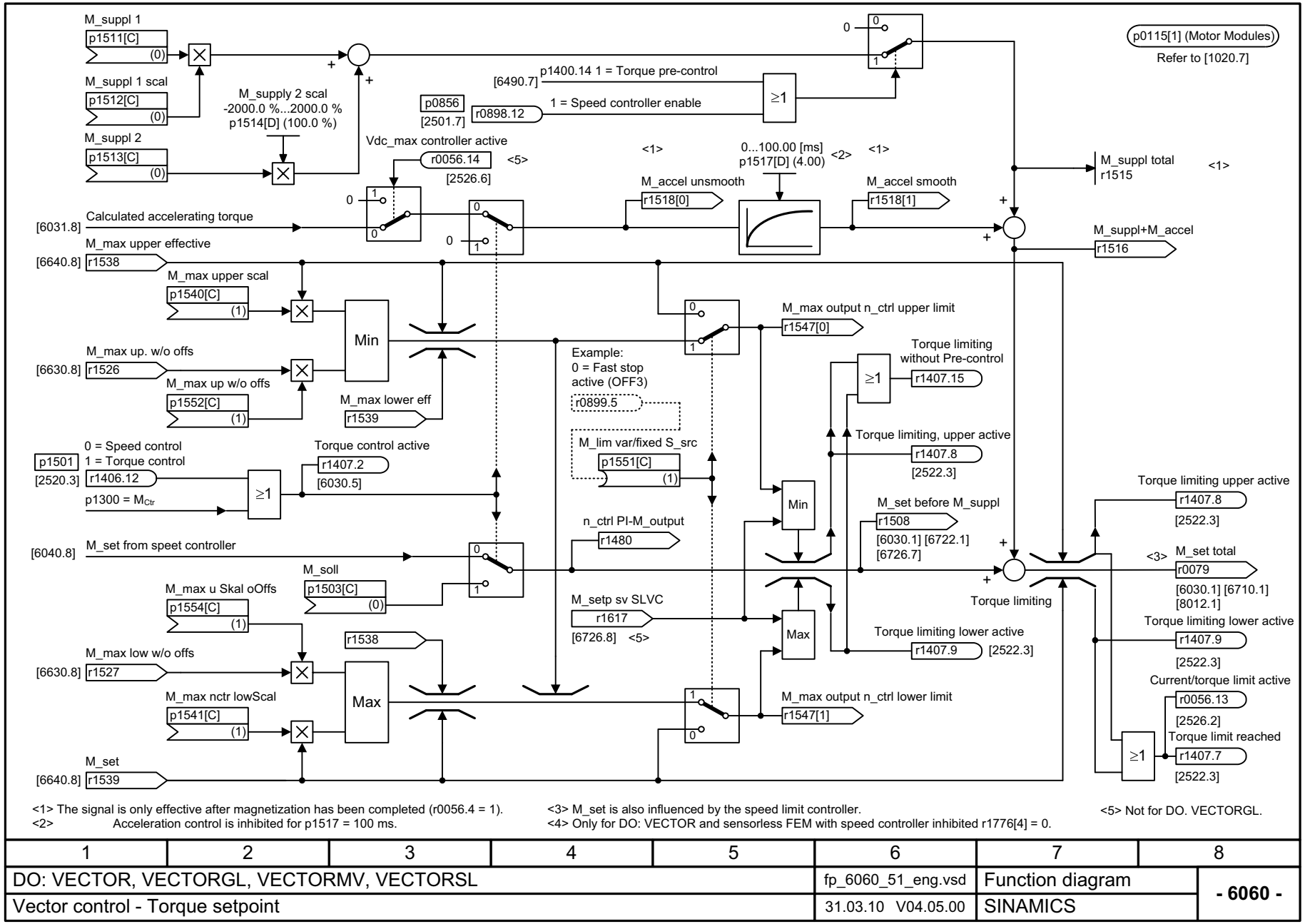

<1> The signal is only effective after magnetization has been completed (r0056.4 = 1).
<2> Acceleration control is inhibited for p1517 = 100 ms.
<3> M_set is also influenced by the speed limit controller.
<4> Only for DO: VECTOR and sensorless FEM with speed controller inhibited r1776[4] = 0.
<5> Not for DO. VECTORGL.

1	2	3	4	5	6	7	8
DO: VECTOR, VECTORGL, VECTORMV, VECTORSL					fp_6060_51_eng.vsd	Function diagram	- 6060 -
Vector control - Torque setpoint					31.03.10 V04.05.00	SINAMICS	

© Siemens AG 2012 All Rights Reserved

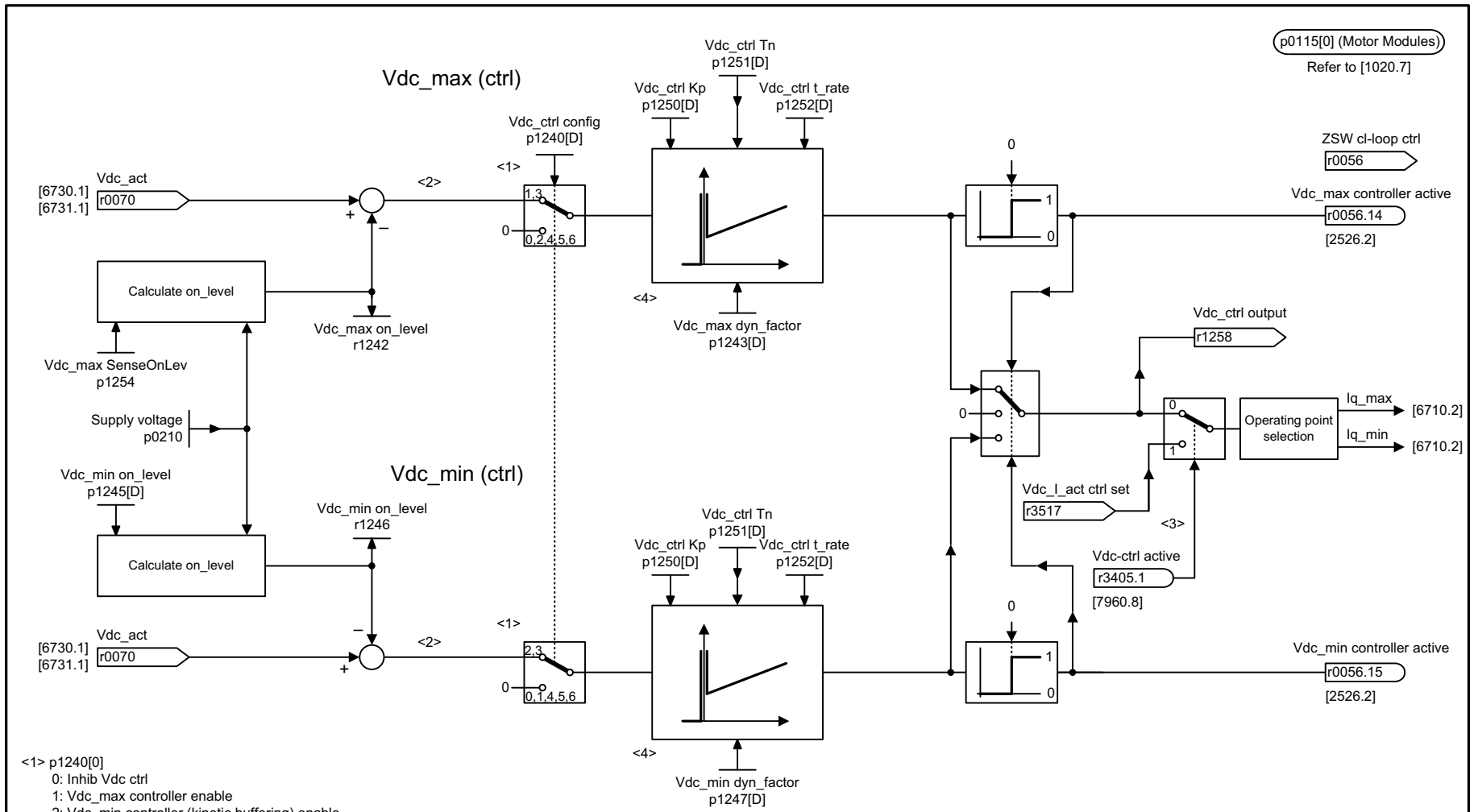

<1> p1240[0]
0: Inhib Vdc ctrl
1: Vdc_max controller enable
2: Vdc_min controller (kinetic buffering) enable
3: Vdc_min controller and Vdc_max controller enable
4: Vdc_Activates Vdc_max monitoring
5: Vdc_Activates Vdc_min monitoring
6: Vdc_Activates Vdc_min monitoring and Vdc_max monitoring

<2> The Vdc controller is switched on when reaching the threshold value. The switch-off hysteresis is 5% of the switch-on level.

<3> Only for VECTOR and if the “technology controller“ function module is active (r0108.16 = 1).

<4> As standard, the controller is designed as a P controller.

1	2	3	4	5	6	7	8
DO: VECTOR, VECTORMV					fp_6220_51_eng.vsd	Function diagram	- 6220 -
Vector control - Vdc_max controller and Vdc_min controller					14.02.11 V04.05.00	SINAMICS	

Fig. 2-121 6220 – Vdc_max controller and Vdc_min controller

© Siemens AG 2012 All Rights Reserved

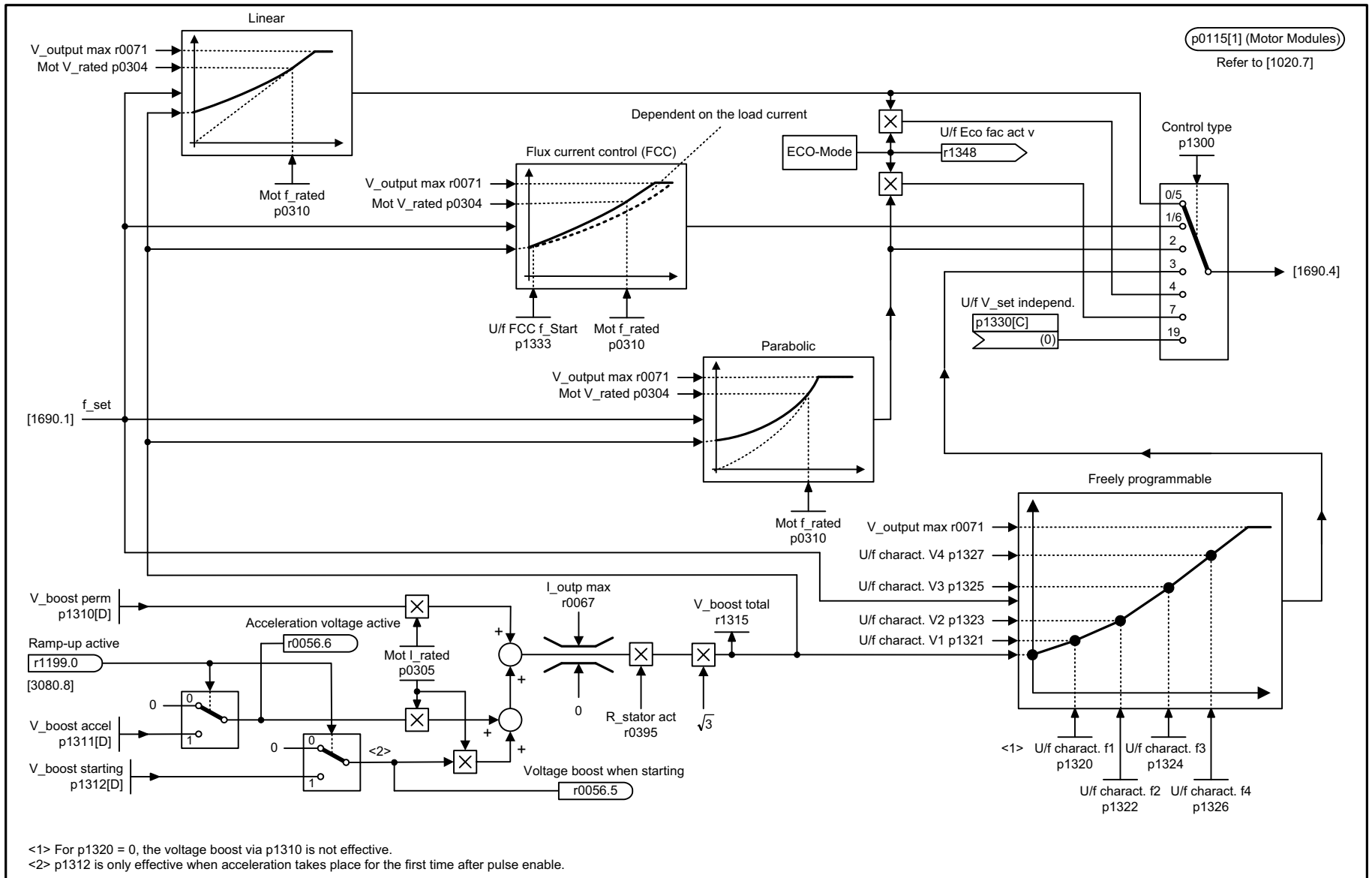

<1> For p1320 = 0, the voltage boost via p1310 is not effective.
<2> p1312 is only effective when acceleration takes place for the first time after pulse enable.

1	2	3	4	5	6	7	8
DO: VECTOR					fp_6300_54_eng.vsd	Function diagram	- 6300 -
Vector control - U/f characteristic and voltage boost					13.12.11 V04.05.00	S120/S150/G130/G150	

Fig. 2-122 6300 – V/f characteristic and voltage boost

© Siemens AG 2012 All Rights Reserved

Fig. 2-123 6310 – Resonance damping and slip compensation

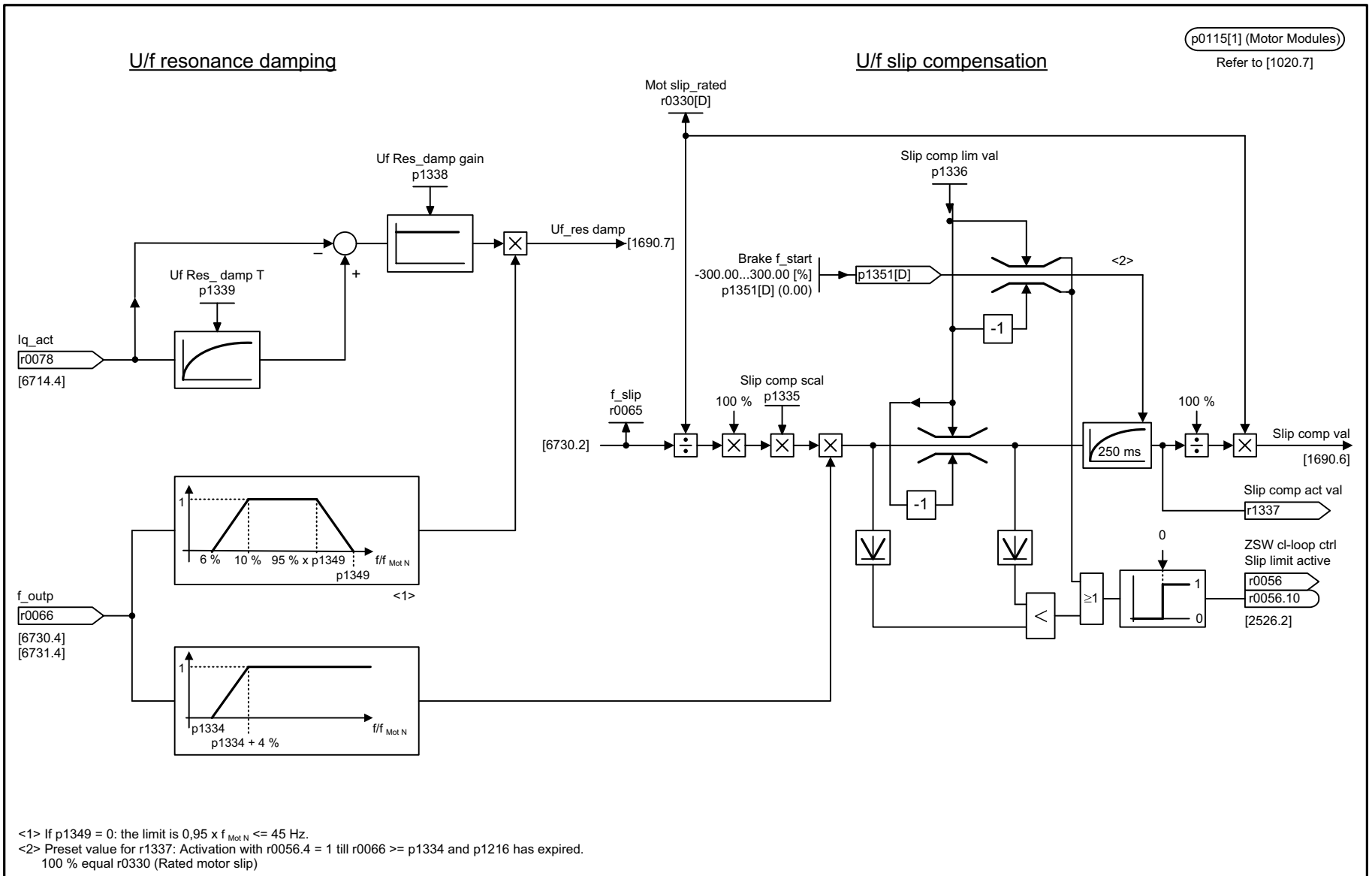

<1> If p1349 = 0: the limit is 0,95 x $f_{Mot\ N}$ <= 45 Hz.
<2> Preset value for r1337: Activation with r0056.4 = 1 till r0066 >= p1334 and p1216 has expired.
100 % equal r0330 (Rated motor slip)

1	2	3	4	5	6	7	8
DO: VECTOR					fp_6310_54_eng.vsd	Function diagram	- 6310 -
Vector control - Resonance damping and slip compensation					17.03.11 V04.05.00	S120/S150/G130/G150	

© Siemens AG 2012 All Rights Reserved
SINAMICS G130/G150 List Manual (LH2), 01/2012, A5E03263479A

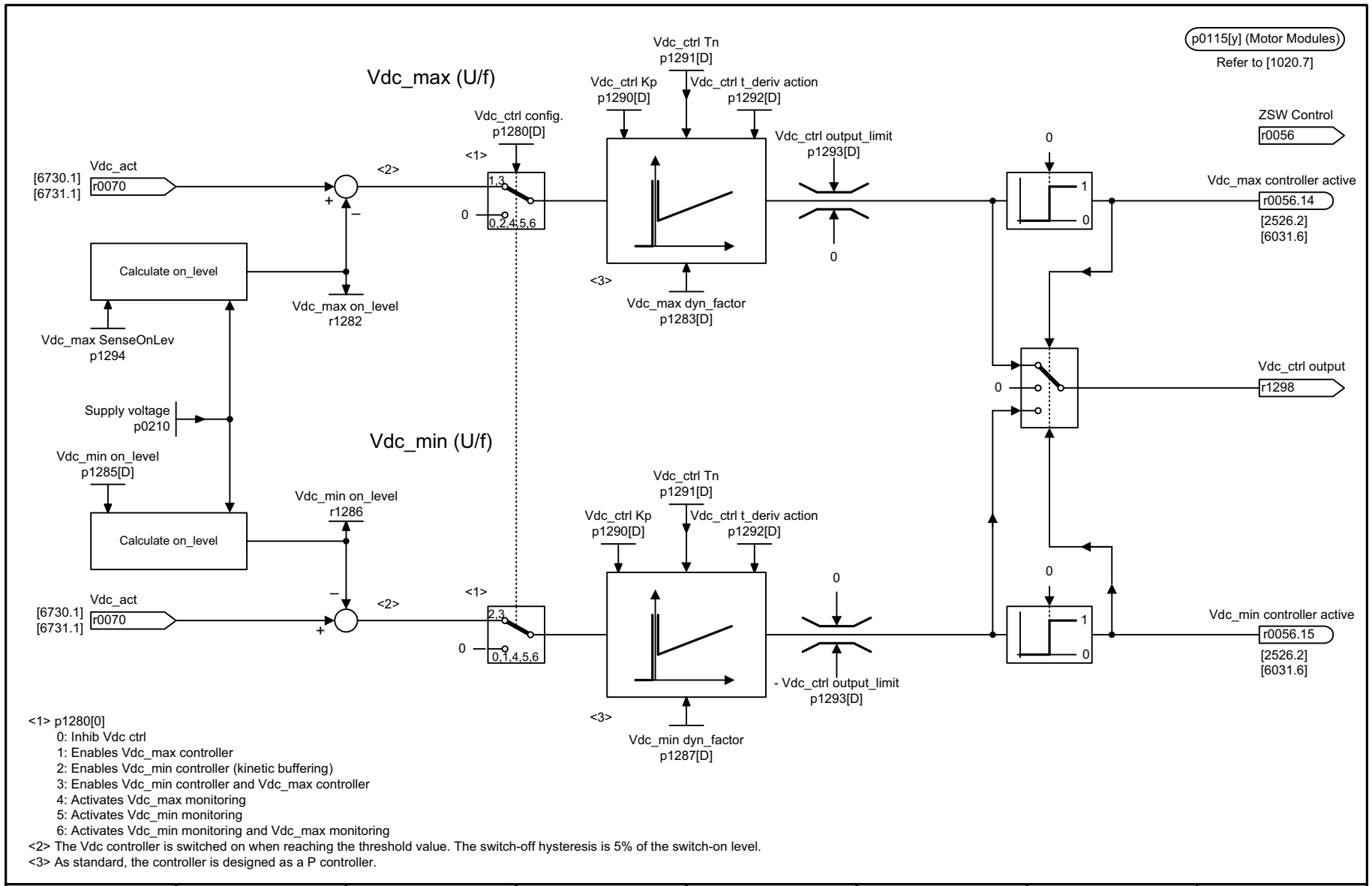

<1> p1280[0]
0: Inhib Vdc ctrl
1: Enables Vdc_max controller
2: Enables Vdc_min controller (kinetic buffering)
3: Enables Vdc_min controller and Vdc_max controller
4: Activates Vdc_max monitoring
5: Activates Vdc_min monitoring
6: Activates Vdc_min monitoring and Vdc_max monitoring

<2> The Vdc controller is switched on when reaching the threshold value. The switch-off hysteresis is 5% of the switch-on level.

<3> As standard, the controller is designed as a P controller.

1	2	3	4	5	6	7	8
DO: VECTOR					fp_6320_54_eng.vsd	Function diagram	- 6320 -
Vector control - Vdc_max controller and Vdc_min controller (U/f)					03.11.11 V04.05.00	S120/S150/G130/G150	

Fig. 2-124 6320 – Vdc_max controller and Vdc_min controller (U/f)

© Siemens AG 2012 All Rights Reserved

p0115[1] (Motor Modules)
Refer to [1020.7]

n_ctrl config
p1400[D]

Speed control configuration

Factory setting

Bit No.	Meaning		
0	**1 = Automatic Kp/Tn adaptation active**	1	[6040.3]
1	**1 = Sensorless vector control, freeze I component**	0	[6040.3]
2	**1 = Acceleration pre-control, external source (p1495)** **0 = Acceleration pre-control, internal source (n_set)**	0	[6031.2]
3	**1 = Reference model, speed setpoint I component ON**	0	[6031.1][6031.7]
4	**Reserved**		
5	**1 = Kp/Tn adaptation active**	1	[6040.3]
6	**1 = Free Tn adaptation active**	0	[6050.6]
7	**Reserved**		
8	**Reserved**		
9	**Reserved**		
10	**Reserved**		
11	**Reserved**		
12	**Reserved**		
13	**Reserved**		
14	**1 = Torque pre-control always active** **0 = Torque pre-control for n_ctrl enabled**	0	[6060.4]
15	**1 = Sensorless vector control, speed pre-control active**	1	[6030.5]

Fig. 2-125 6490 – Speed control configuration

1	2	3	4	5	6	7	8
DO: VECTOR, VECTORGL, VECTORMV, VECTORSL					fp_6490_51_eng.vsd	Function diagram	- 6490 -
Vector control - Speed control configuration					29.06.09 V04.05.00	SINAMICS	

© Siemens AG 2012 All Rights Reserved

Fig. 2-126 6491 – Flux control configuration

p1401[D]

Flux control, configuration

Factory setting

p0115[2] (Motor Modules)
Refer to [1020.7]

F_ctrl config
p1401[D]

Bit No.	Meaning	Factory setting	
0	**1 = Flux setpoint, soft starting active**	0	[6722.3]
1	**1 = Flux setpoint, differentiation active**	1	[6723.7]
2	**1 = Flux build-up control active**	1	[6723.6]
3	**1 = Flux characteristic, load-dependent**	1	[6725.2]
4	**1 = Flux controller (ASM with encoder)**	1	
5	**1 = Flux impression with model chngov (ASM with encoder)** 0 = Flux impression from 30 % n_rated (ASM with encoder)	1	
6	**1 = Quick magnetizing**	1	[6722.5]
7	**Reserved**		
8	**Reserved**		
9	**Reserved**		
10	**Reserved**		
11	**Reserved**		
12	**Reserved**		
13	**Reserved**		
14	**Reserved**		
15	**Reserved**		

© Siemens AG 2012 All Rights Reserved

Fig. 2-127 6630 – Upper/lower torque limit

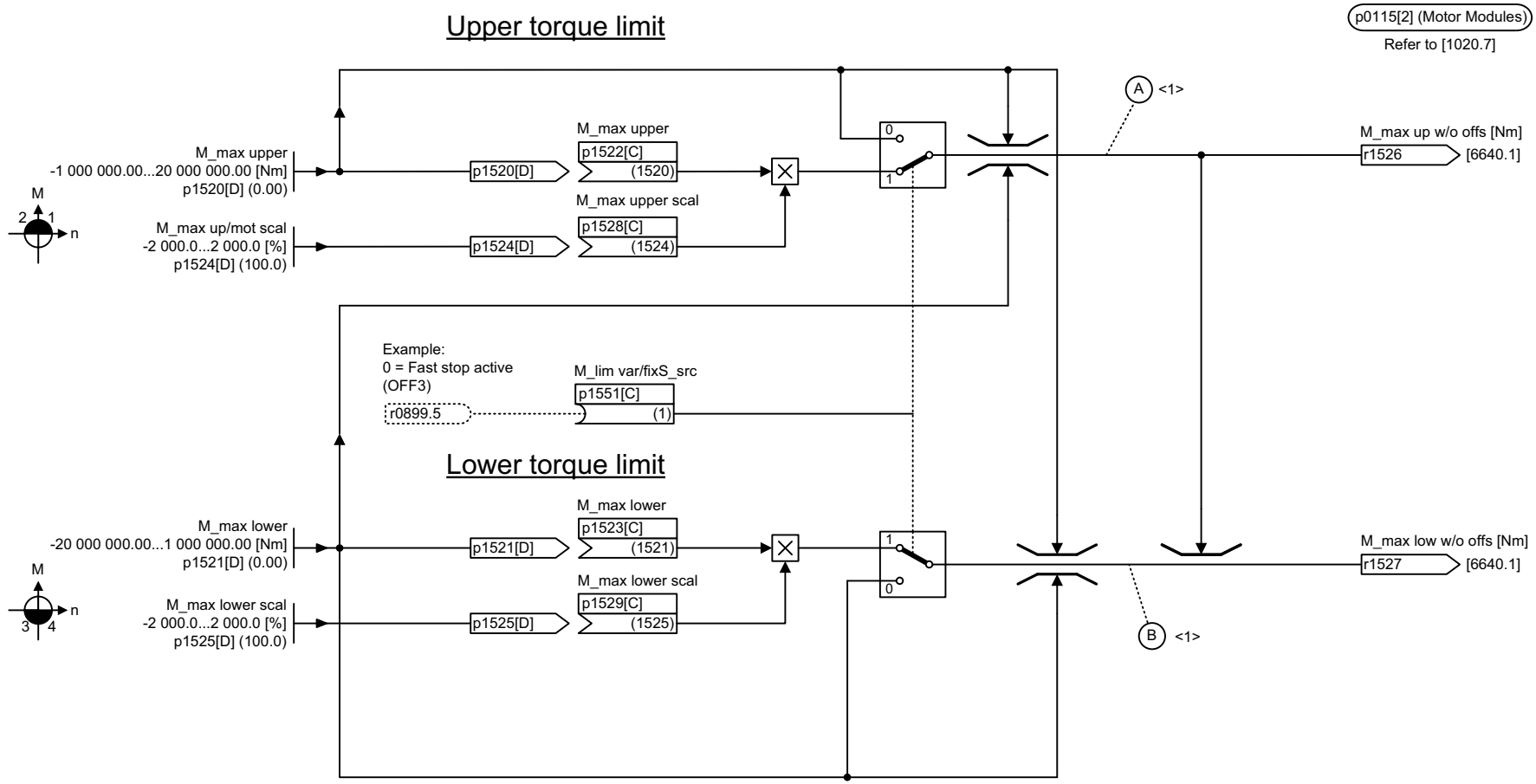

<1> Danger: Negative values at (A) or positive values at (B) represent a minimum torque for the other torque direction and can cause the motor to accelerate uncontrollably.

1	2	3	4	5	6	7	8
DO: VECTOR, VECTORGL, VECTORMV, VECTORSL					fp_6630_51_eng.vsd	Function diagram	- 6630 -
Vector control - Upper/lower torque limit					19.08.09 V04.05.00	SINAMICS	

© Siemens AG 2012 All Rights Reserved

Fig. 2-128 6640 – Current/power/torque limits

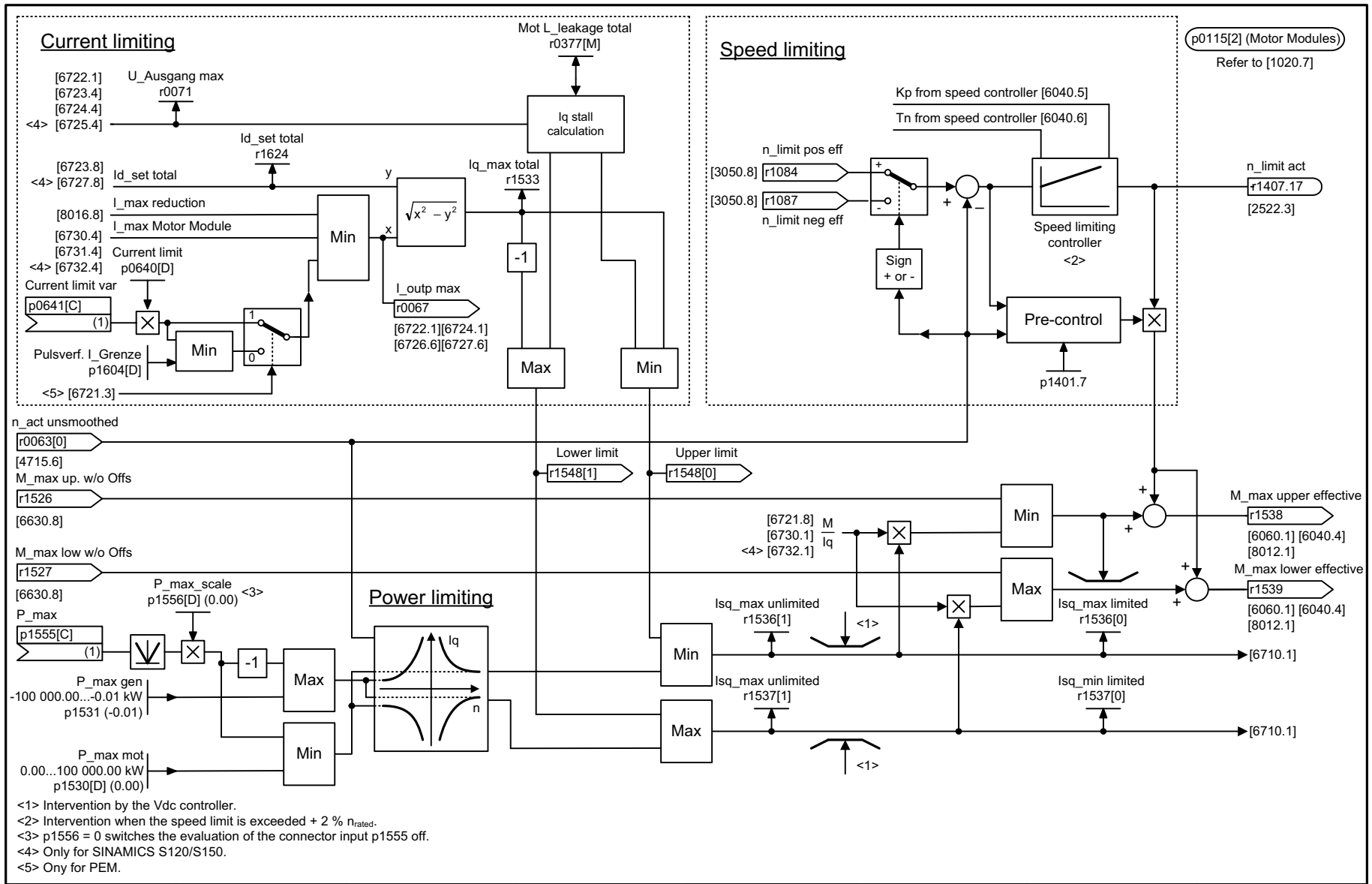

1	2	3	4	5	6	7	8
DO: VECTOR					fp_6640_54_eng.vsd	Function diagram	- 6640 -
Vector control - Current/power/torque limits					11.11.11 V04.05.00	S120/S150/G130/G150	

© Siemens AG 2012 All Rights Reserved

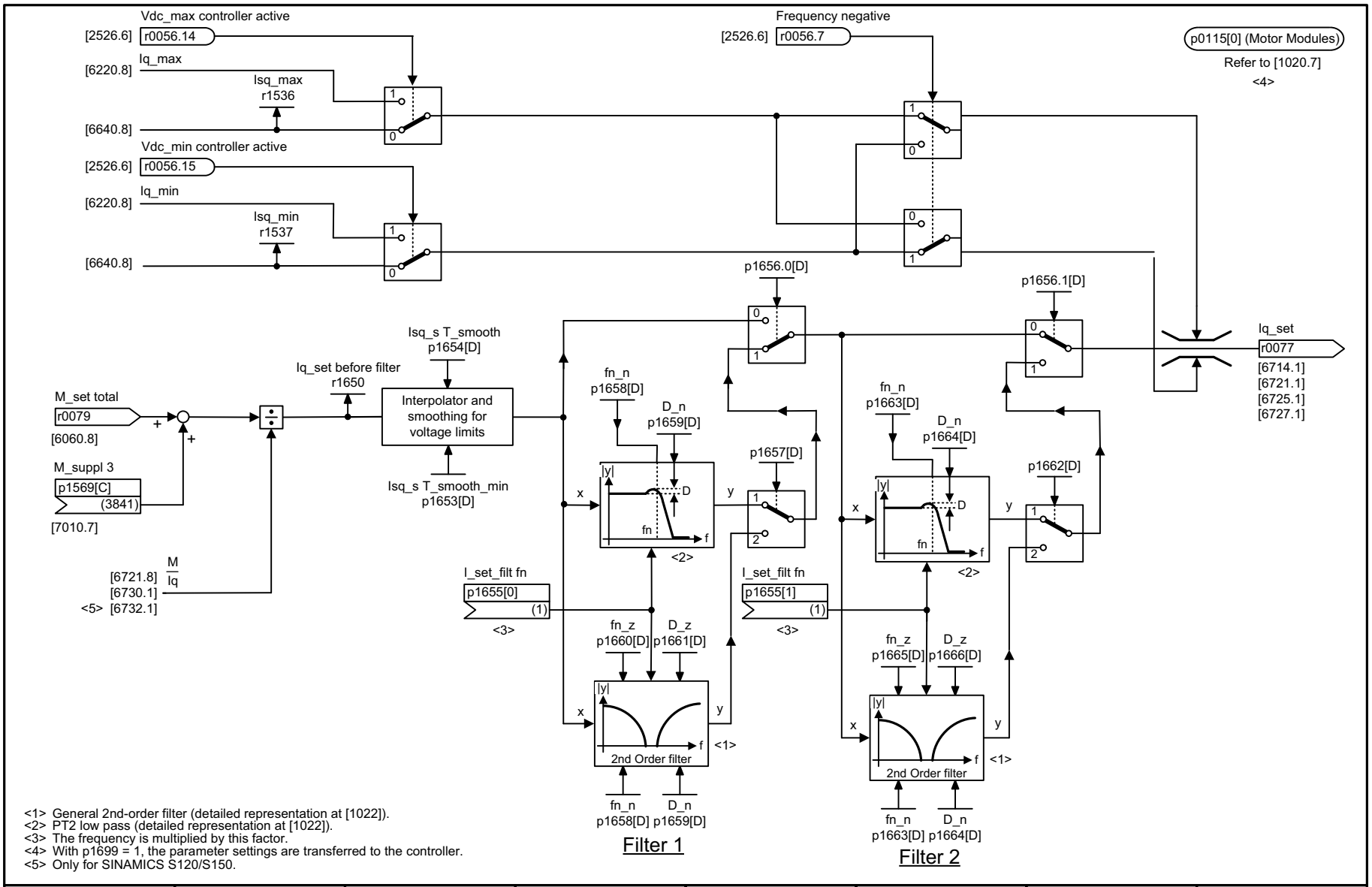

<1> General 2nd-order filter (detailed representation at [1022]).
<2> PT2 low pass (detailed representation at [1022]).
<3> The frequency is multiplied by this factor.
<4> With p1699 = 1, the parameter settings are transferred to the controller.
<5> Only for SINAMICS S120/S150.

1	2	3	4	5	6	7	8
DO: VECTOR					fp_6710_54_eng.vsd	Function diagram	- 6710 -
Vector control - Current setpoint filter					02.08.11 V04.05.00	S120/S150/G130/G150	

Fig. 2-129 6710 – Current setpoint filter

© Siemens AG 2012 All Rights Reserved

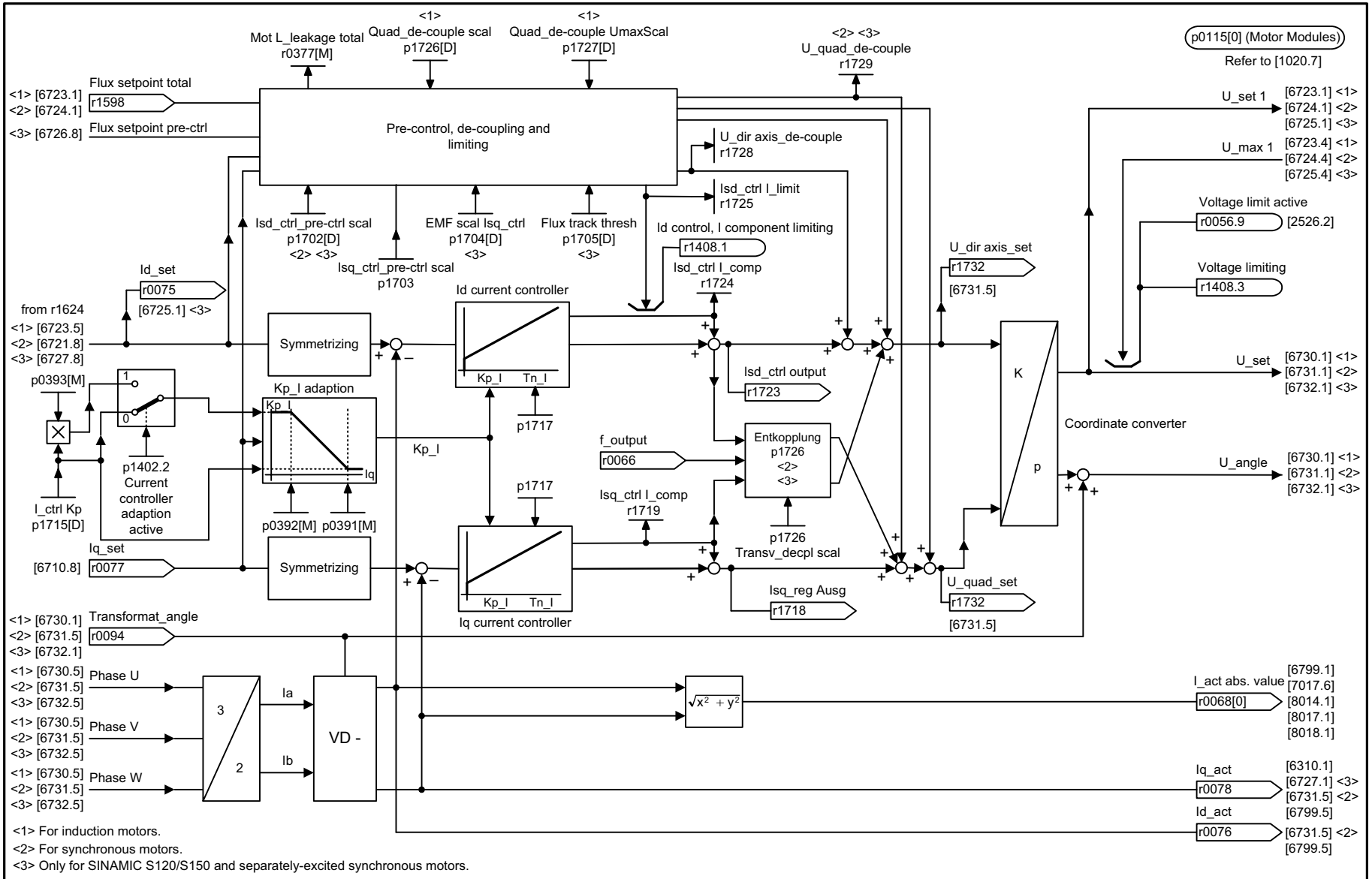

1	2	3	4	5	6	7	8
DO: VECTOR					fp_6714_54_eng.vsd	Function diagram	- 6714 -
Vector control - Iq and Id controllers					10.03.10 V04.05.00	S120/S150/G130/G150	

Fig. 2-130 6714 – Iq and Id controller

© Siemens AG 2012 All Rights Reserved

Fig. 2-131 6721 – Id setpoint (PEM, p0300 = 2)

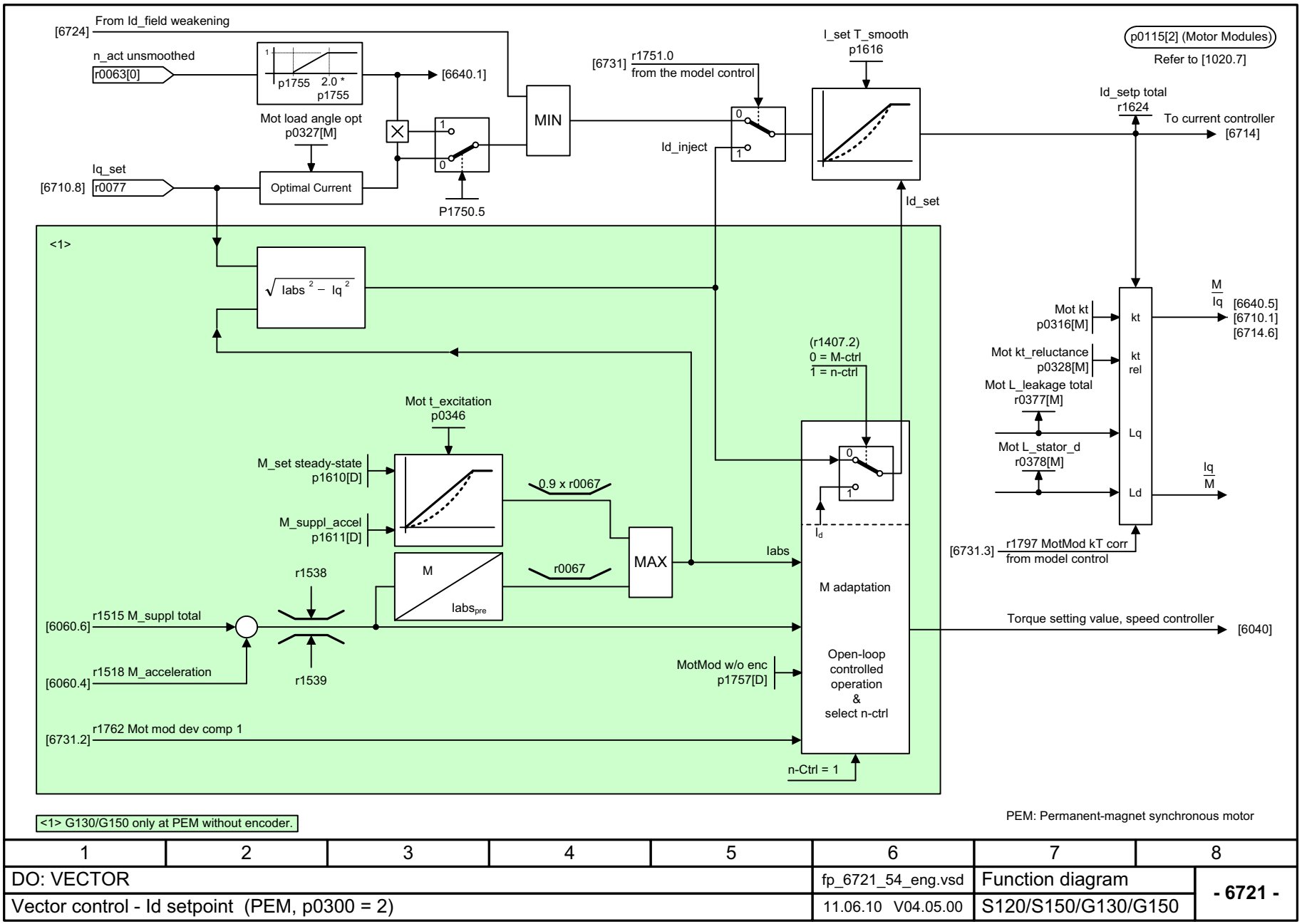

1	2	3	4	5	6	7	8
DO: VECTOR					fp_6721_54_eng.vsd	Function diagram	- 6721 -
Vector control - Id setpoint (PEM, p0300 = 2)					11.06.10 V04.05.00	S120/S150/G130/G150	

© Siemens AG 2012 All Rights Reserved

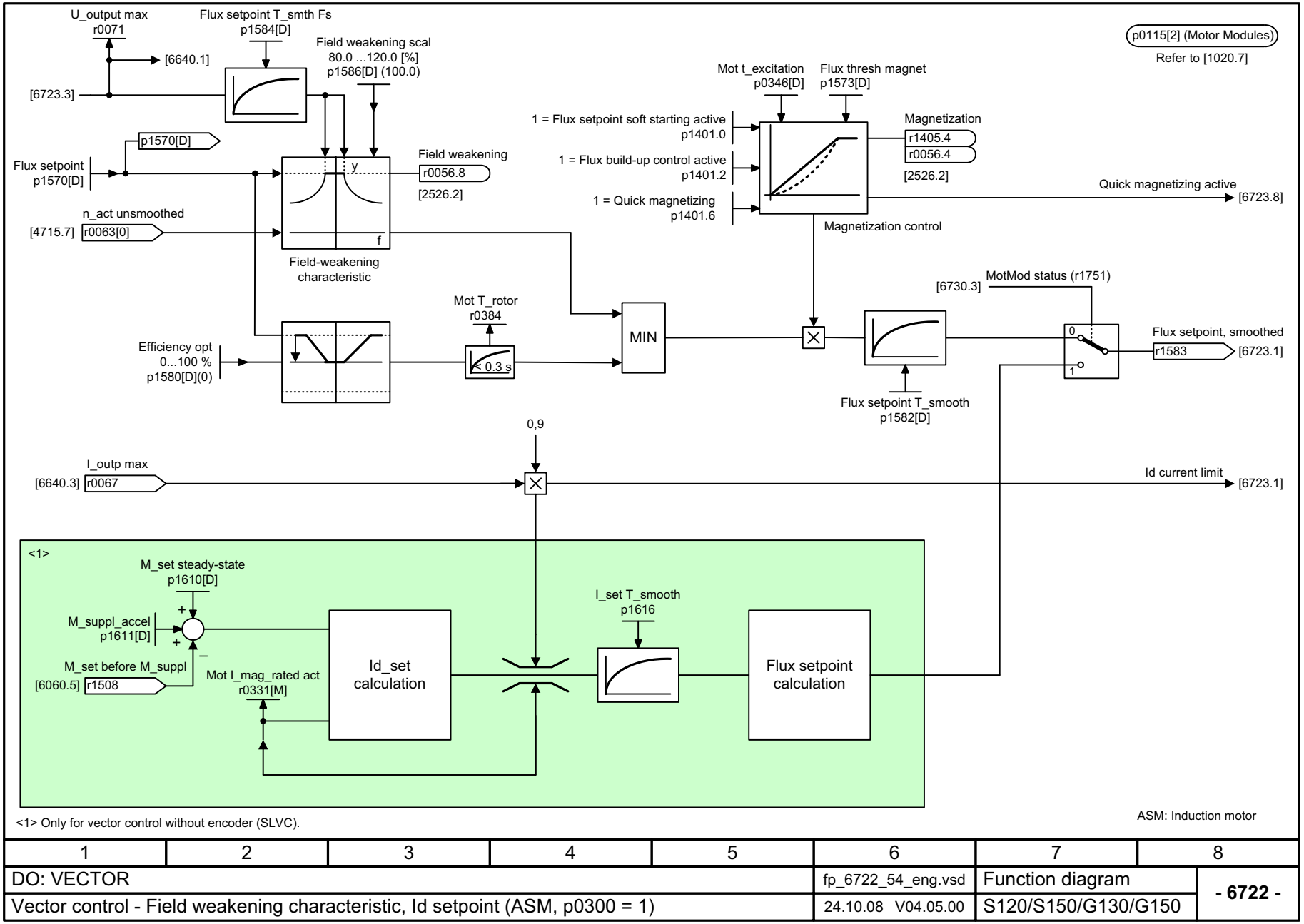

<1> Only for vector control without encoder (SLVC).

1	2	3	4	5	6	7	8
DO: VECTOR					fp_6722_54_eng.vsd	Function diagram	- 6722 -
Vector control - Field weakening characteristic, Id setpoint (ASM, p0300 = 1)					24.10.08 V04.05.00	S120/S150/G130/G150	

Fig. 2-132 6722 – Field weakening characteristic, Id setpoint (ASM, p0300 = 1)

© Siemens AG 2012 All Rights Reserved

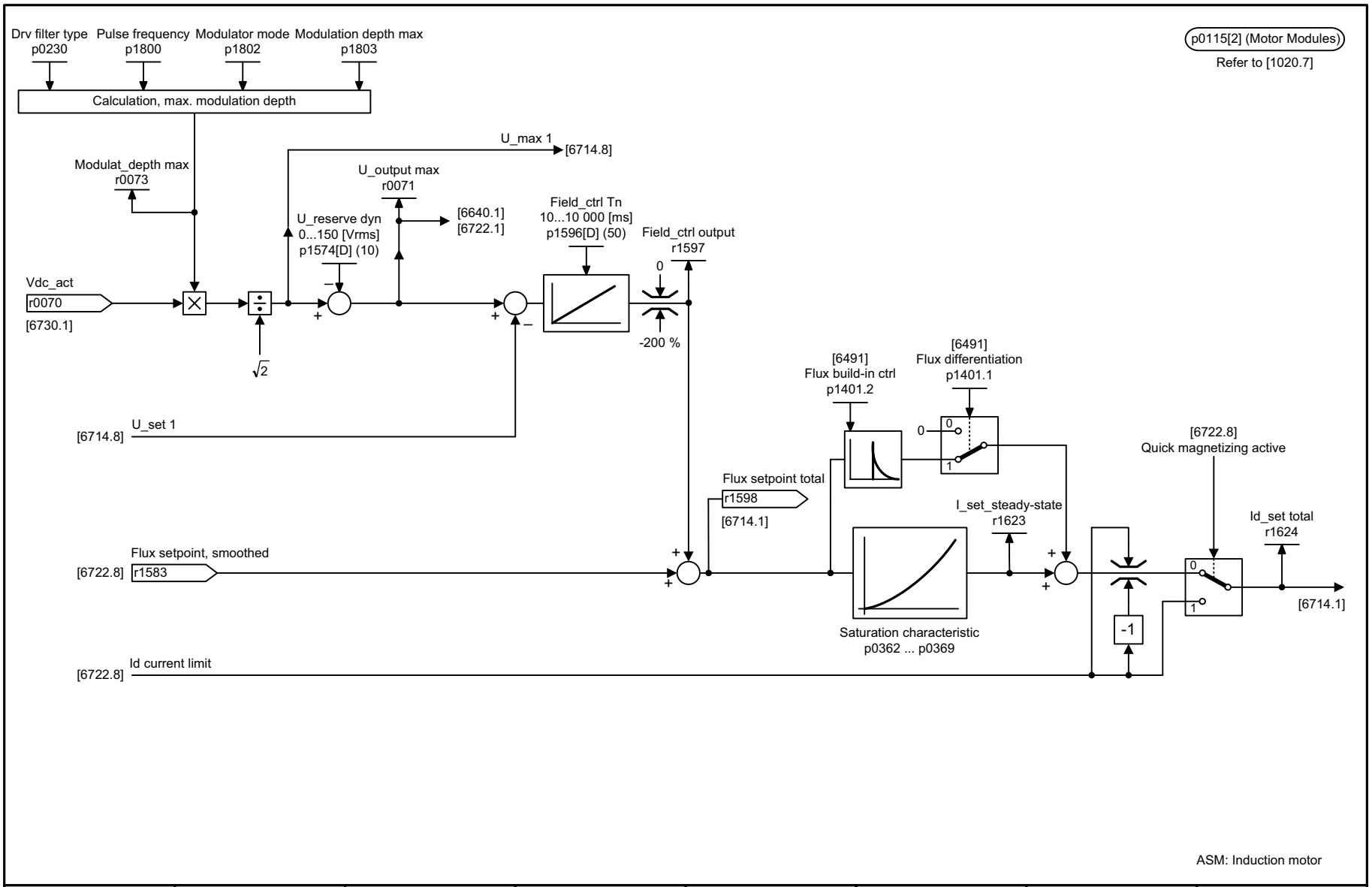

1	2	3	4	5	6	7	8
DO: VECTOR					fp_6723_54_eng.vsd	Function diagram	- 6723 -
Vector control - Field weakening controller, flux controller (ASM, p0300 = 1)					24.10.08 V04.05.00	S120/S150/G130/G150	

Fig. 2-133 6723 – Field weakening controller, flux controller (ASM, p0300 = 1)

© Siemens AG 2012 All Rights Reserved

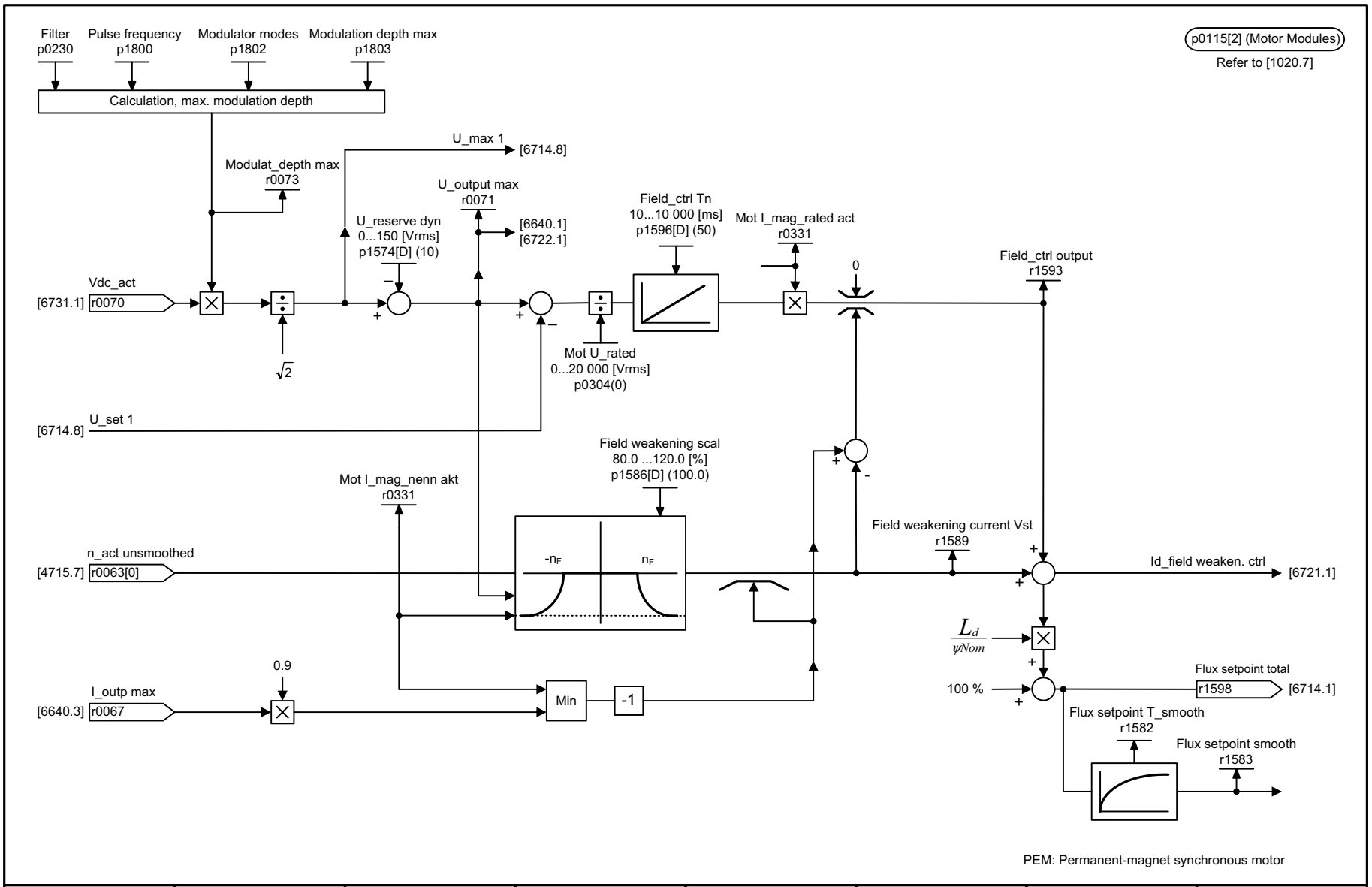

1	2	3	4	5	6	7	8
DO: VECTOR					fp_6724_54_eng.vsd	Function diagram	- 6724 -
Vector control - Field weakening controller (PEM, p0300 = 2)					03.03.10 V04.05.00	S120/S150/G130/G150	

Fig. 2-134 6724 – Field weakening controller (PEM, p0300 = 2)

© Siemens AG 2012 All Rights Reserved

Fig. 2-135 6730 – Interface to the Motor Module (ASM, p0300 = 1)

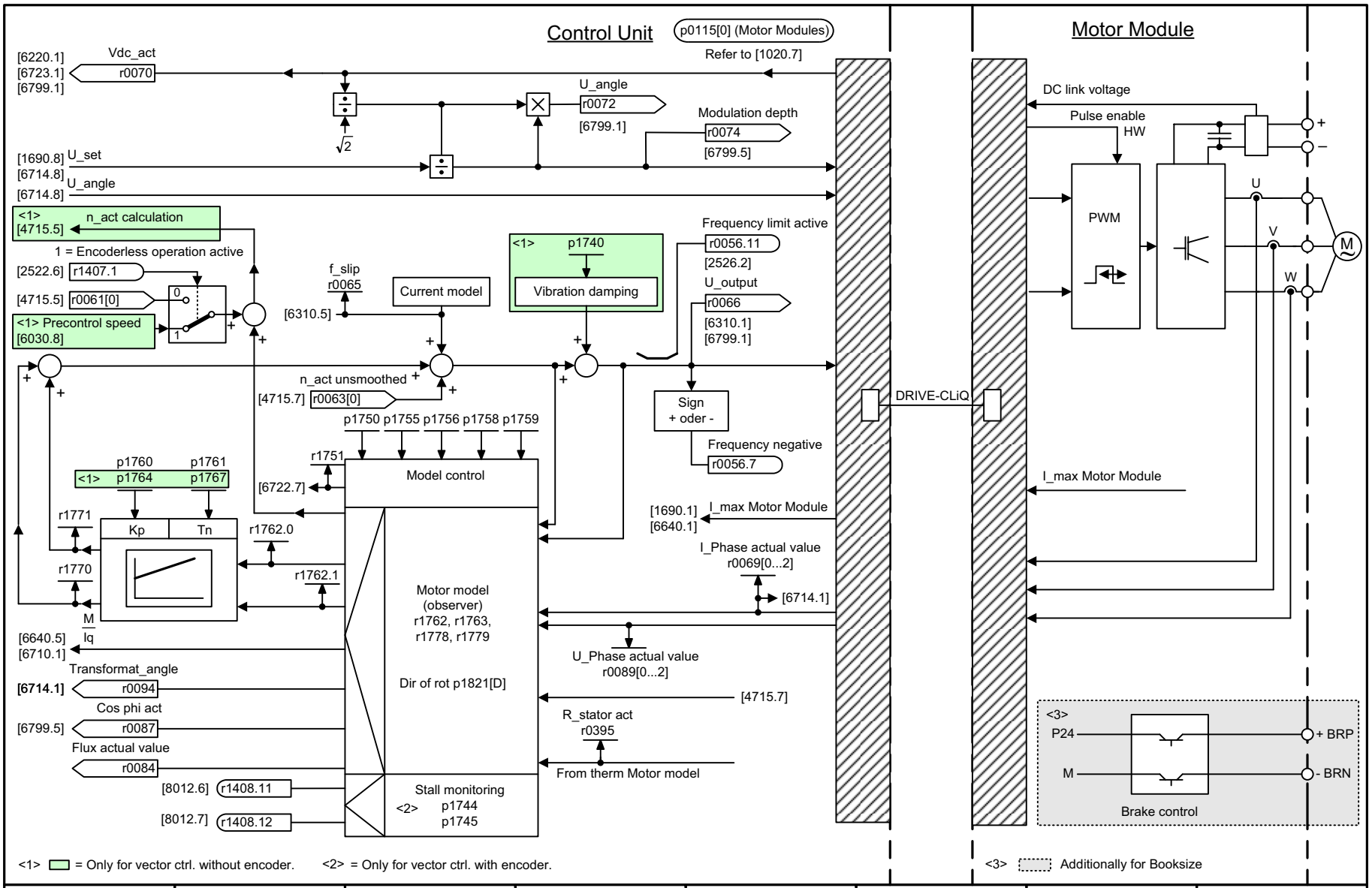

1	2	3	4	5	6	7	8
DO: VECTOR					fp_6730_54_eng.vsd	Function diagram	- 6730 -
Vector control - Interface to the Motor Module (ASM, p0300 = 1)					30.08.11 V04.05.00	S120/S150/G130/G150	

© Siemens AG 2012 All Rights Reserved

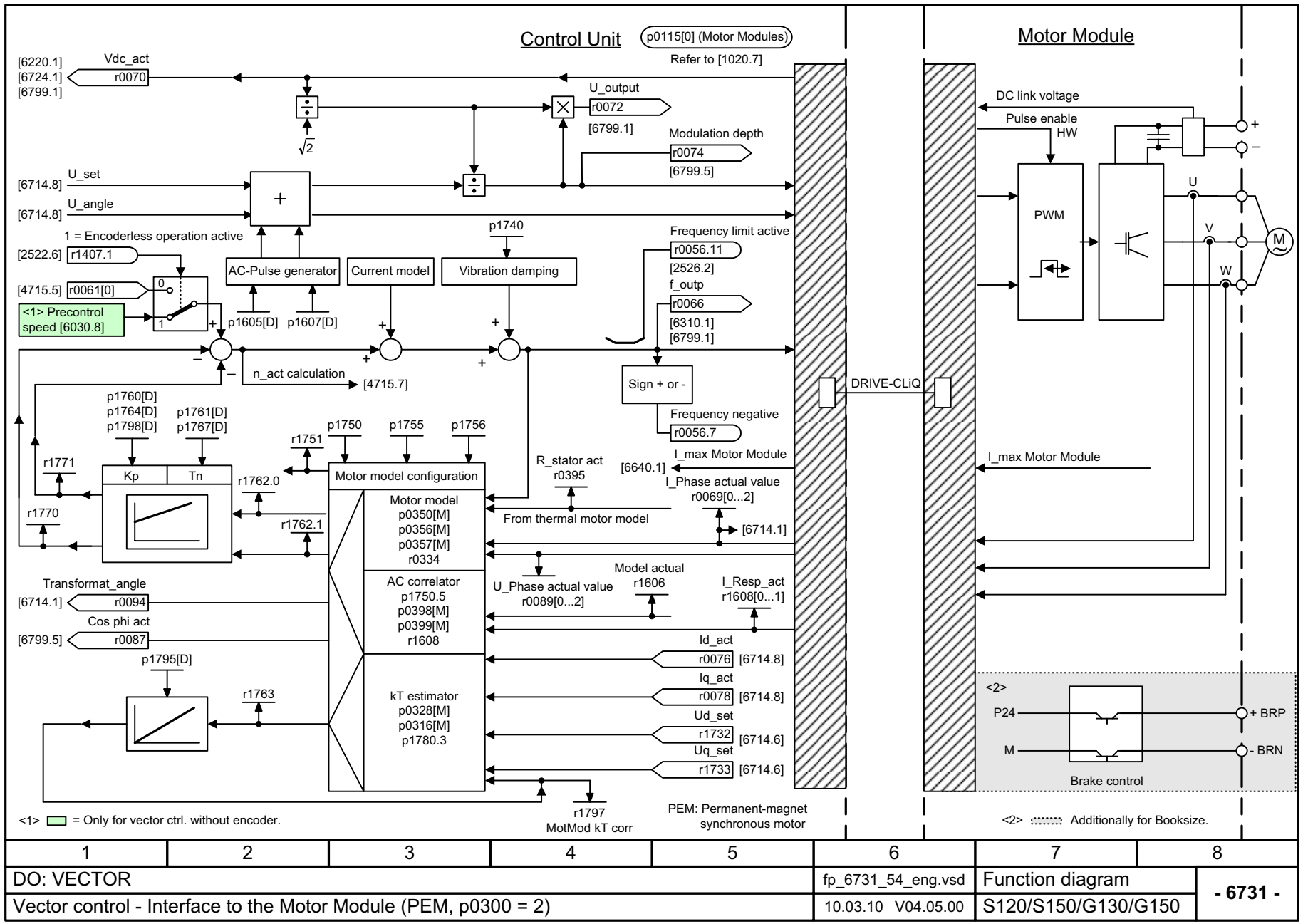

1	2	3	4	5	6	7	8
DO: VECTOR					fp_6731_54_eng.vsd	Function diagram	- 6731 -
Vector control - Interface to the Motor Module (PEM, p0300 = 2)					10.03.10 V04.05.00	S120/S150/G130/G150	

Fig. 2-136 6731 – Interface to the Motor Module (PEM, p0300 = 2)

© Siemens AG 2012 All Rights Reserved

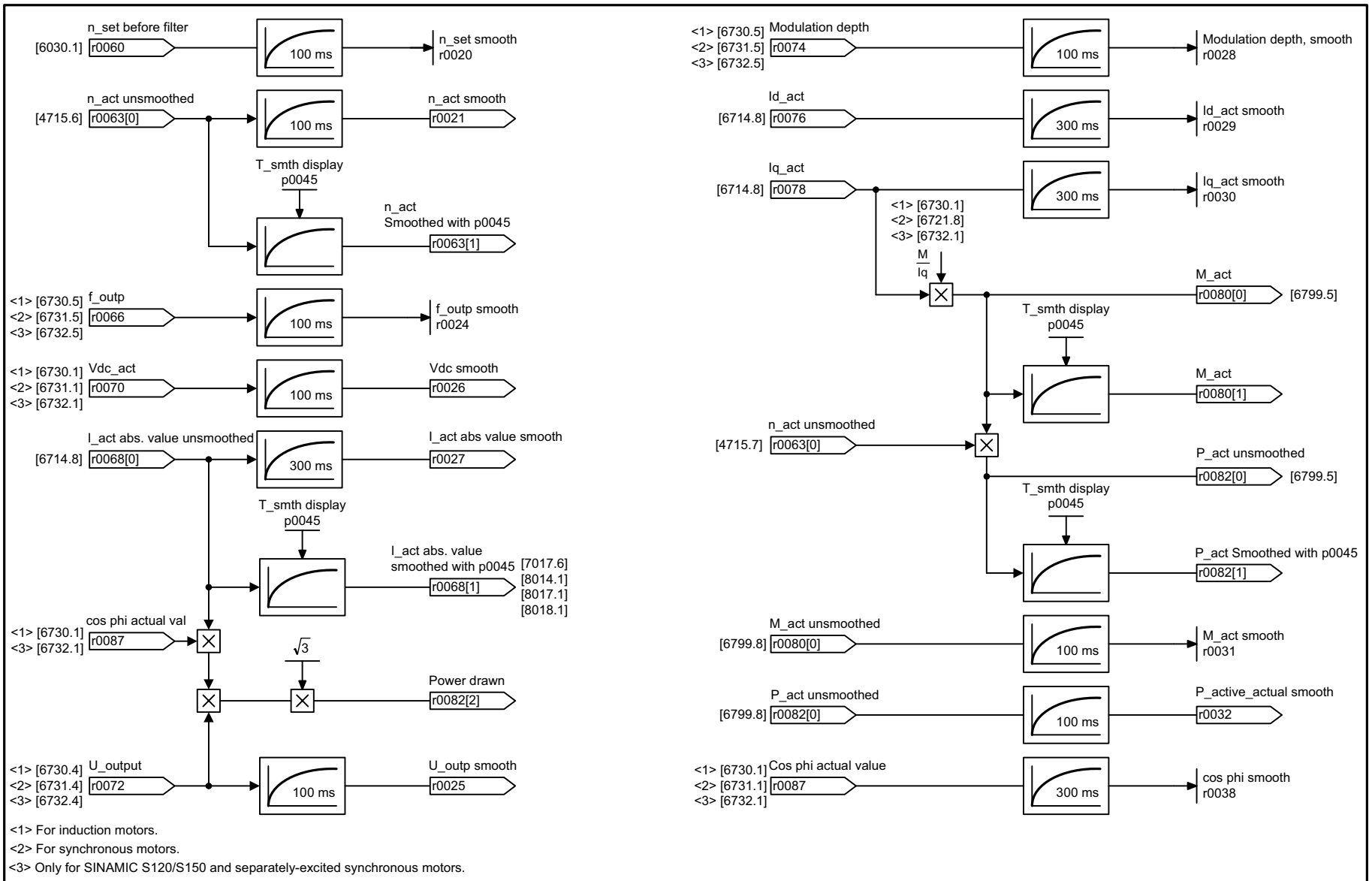

<1> For induction motors.
<2> For synchronous motors.
<3> Only for SINAMIC S120/S150 and separately-excited synchronous motors.

1	2	3	4	5	6	7	8
DO: VECTOR					fp_6799_54_eng.vsd	Function diagram	- 6799 -
Vector control - Display signals					10.03.10 V04.05.00	S120/S150/G130/G150	

Fig. 2-137 6799 – Display signals

© Siemens AG 2012 All Rights Reserved

2.15 Technology functions

Function diagrams

7010 – Friction characteristic	2-1132
7014 – External Armature Short-Circuit (EASC, p0300 = 2xx or 4xx)	2-1133
7016 – Internal Armature Short-Circuit (IASC, p0300 = 2xx or 4xx)	2-1134
7017 – DC braking (p0300 = 1xx)	2-1135
7020 – Synchronization	2-1136

© Siemens AG 2012 All Rights Reserved

Fig. 2-138 7010 – Friction characteristic

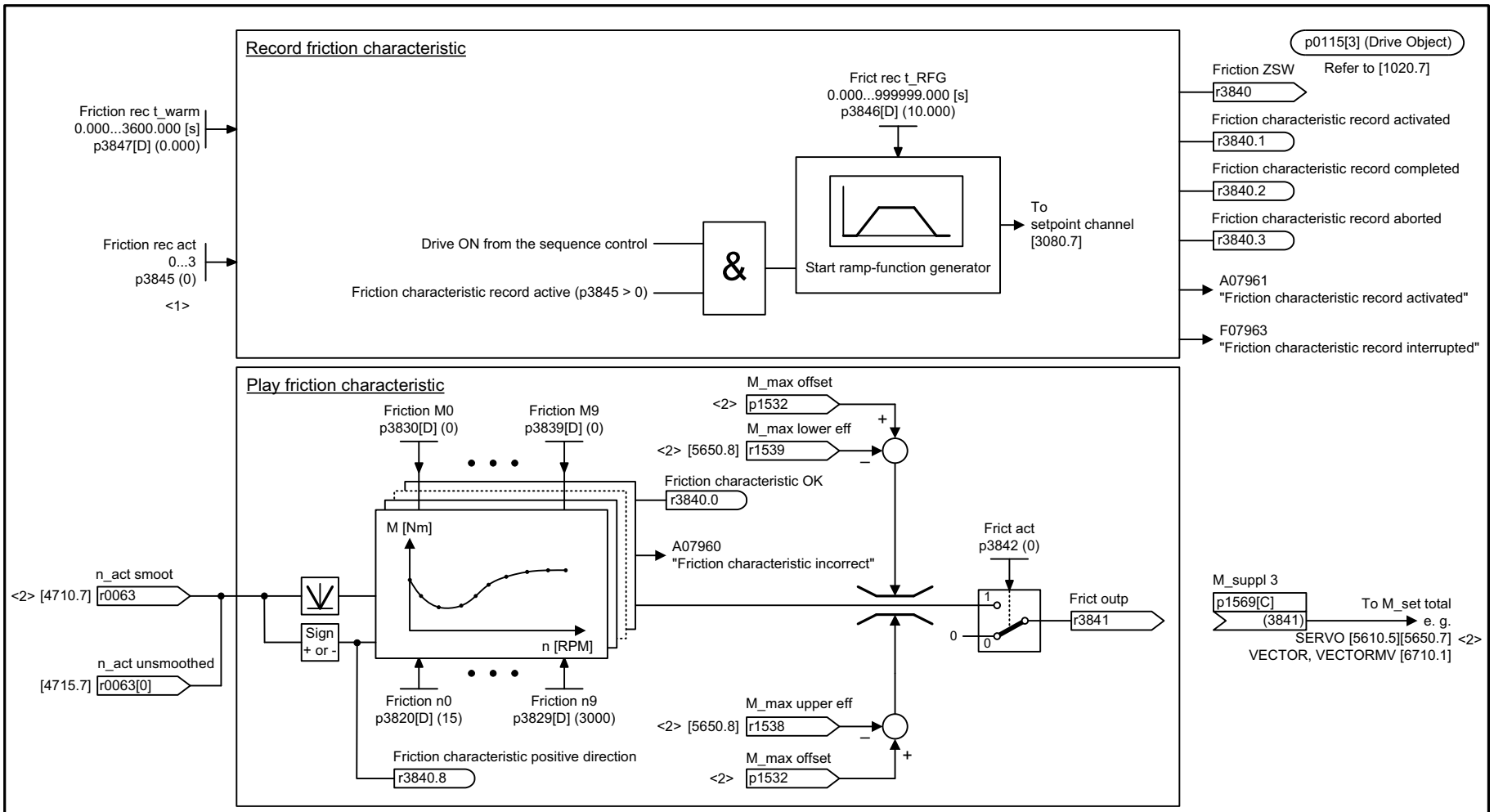

<1> p3845
= 0: Friction characteristic record deactivated
= 1: Friction char record activated for all directions
= 2: Friction char record activated for positive direction
= 3: Friction char record activated for negative direction
<2> Only for SINAMICS S120 and SERVO.

1	2	3	4	5	6	7	8
DO: SERVO, VECTOR (n/M), VECTORMV					fp_7010_51_eng.vsd	Function diagram	- 7010 -
Technology functions - Friction characteristic					18.10.10 V04.05.00	SINAMICS	

© Siemens AG 2012 All Rights Reserved

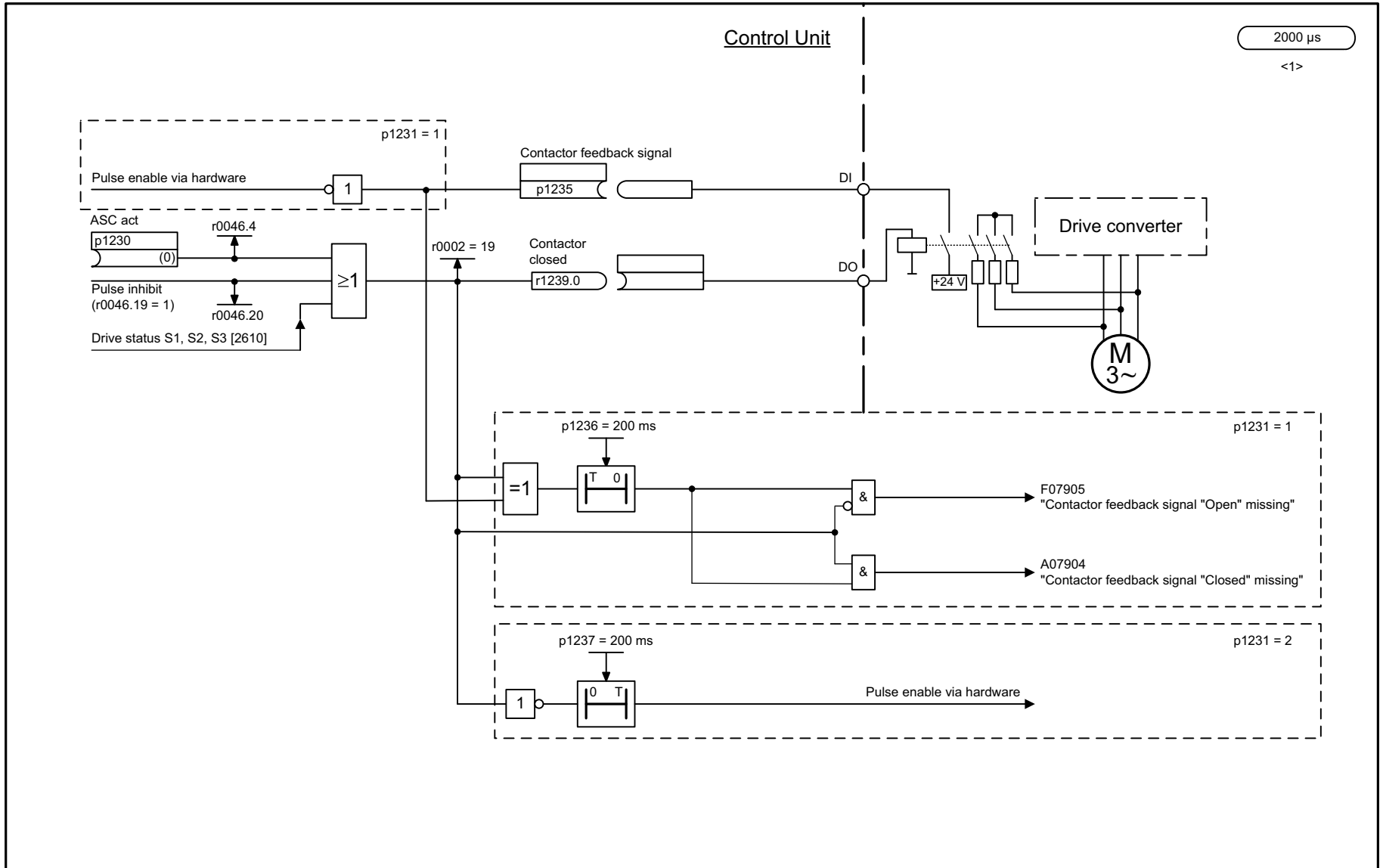

<1> p0300 = 4xx only with S120/S150.

EASC: External Armature Short-Circuit

1	2	3	4	5	6	7	8
DO: SERVO, VECTOR					fp_7014_54_eng.vsd	Function diagram	- 7014 -
Technology functions - External Armature Short-Circuit (EASC, p0300 = 2xx or 4xx)					11.05.09 V04.05.00	S120/S150/G130/G150	

Fig. 2-139 7014 – External Armature Short-Circuit (EASC, p0300 = 2xx or 4xx)

© Siemens AG 2012 All Rights Reserved

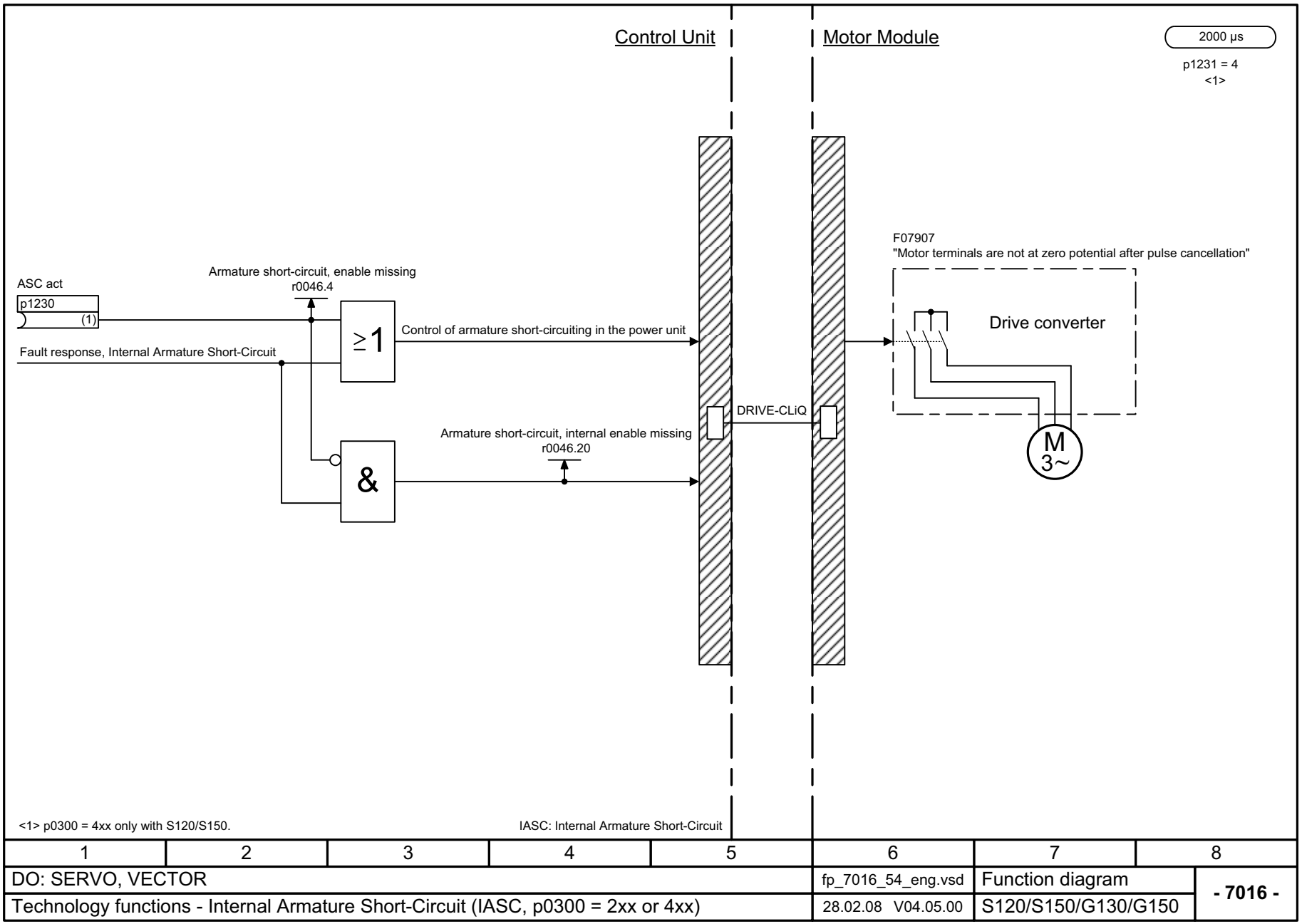

1	2	3	4	5	6	7	8
DO: SERVO, VECTOR					fp_7016_54_eng.vsd	Function diagram	- 7016 -
Technology functions - Internal Armature Short-Circuit (IASC, p0300 = 2xx or 4xx)					28.02.08 V04.05.00	S120/S150/G130/G150	

Fig. 2-140 7016 – Internal Armature Short-Circuit (IASC, p0300 = 2xx or 4xx)

© Siemens AG 2012 All Rights Reserved

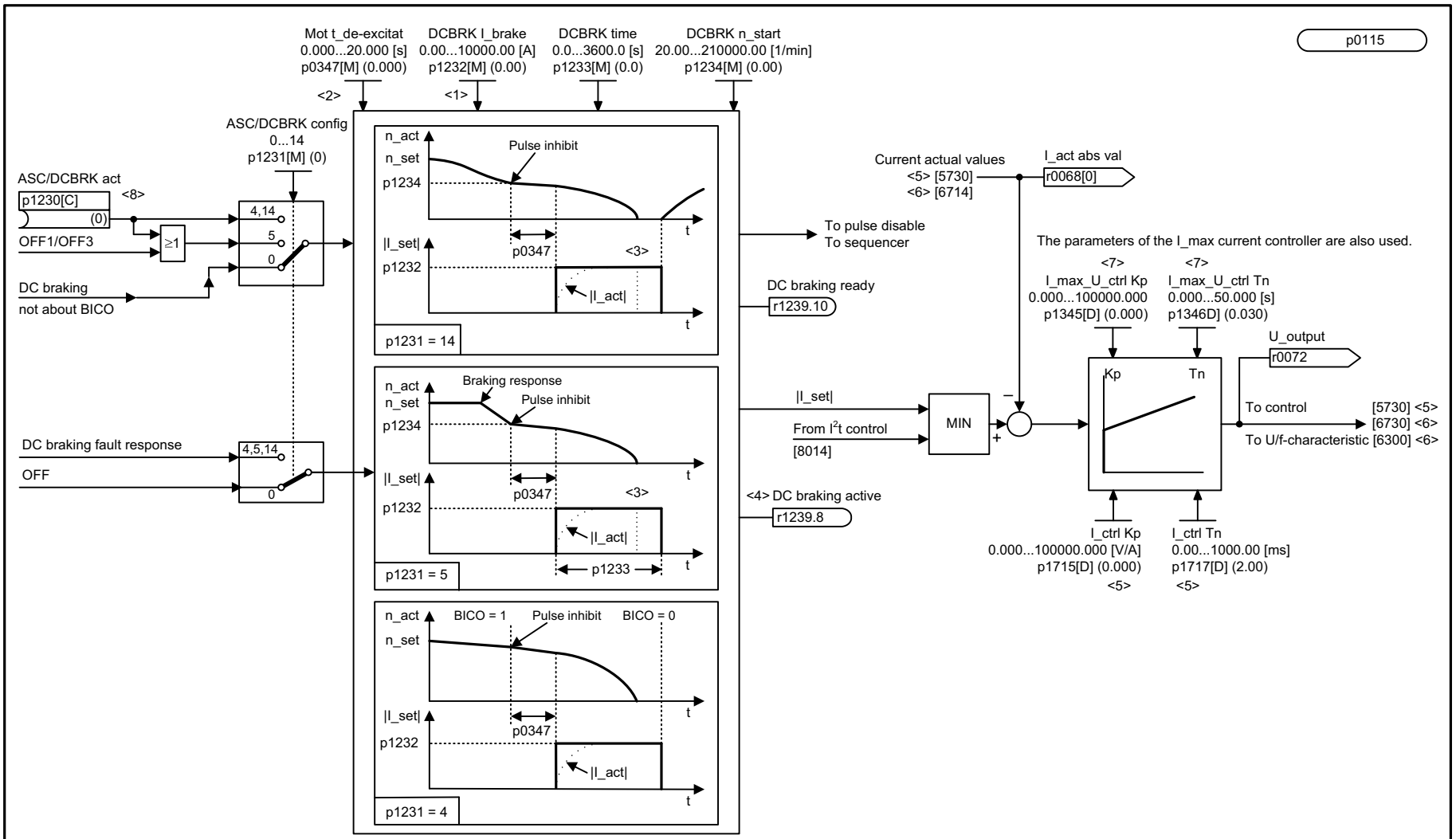

<1> The DC braking current is determined during automatic calculation (p0340 = 1).
<2> The de-magnetization time is determined during automatic calculation (p0340 = 1, 3).
<3> As soon as the standstill threshold (p1226) has been reached, the DC current injection will be aborted prematurely.
<4> Signal r1239.8 is only set while the DC braking is active.
<5> Only for SINAMICS S120 and SERVO.
<6> Only for SINAMICS S120 and VECTOR.
<7> Only for VECTOR.
<8> DC braking upon falling below the starting speed for DC braking (p1234).

1	2	3	4	5	6	7	8
DO: SERVO, VECTOR					fp_7017_54_eng.vsd	Function diagram	- 7017 -
Technology functions - DC braking (p0300 = 1xx)					01.04.11 V04.05.00	S120/S150/G130/G150	

Fig. 2-141 7017 – DC braking (p0300 = 1xx)

© Siemens AG 2012 All Rights Reserved

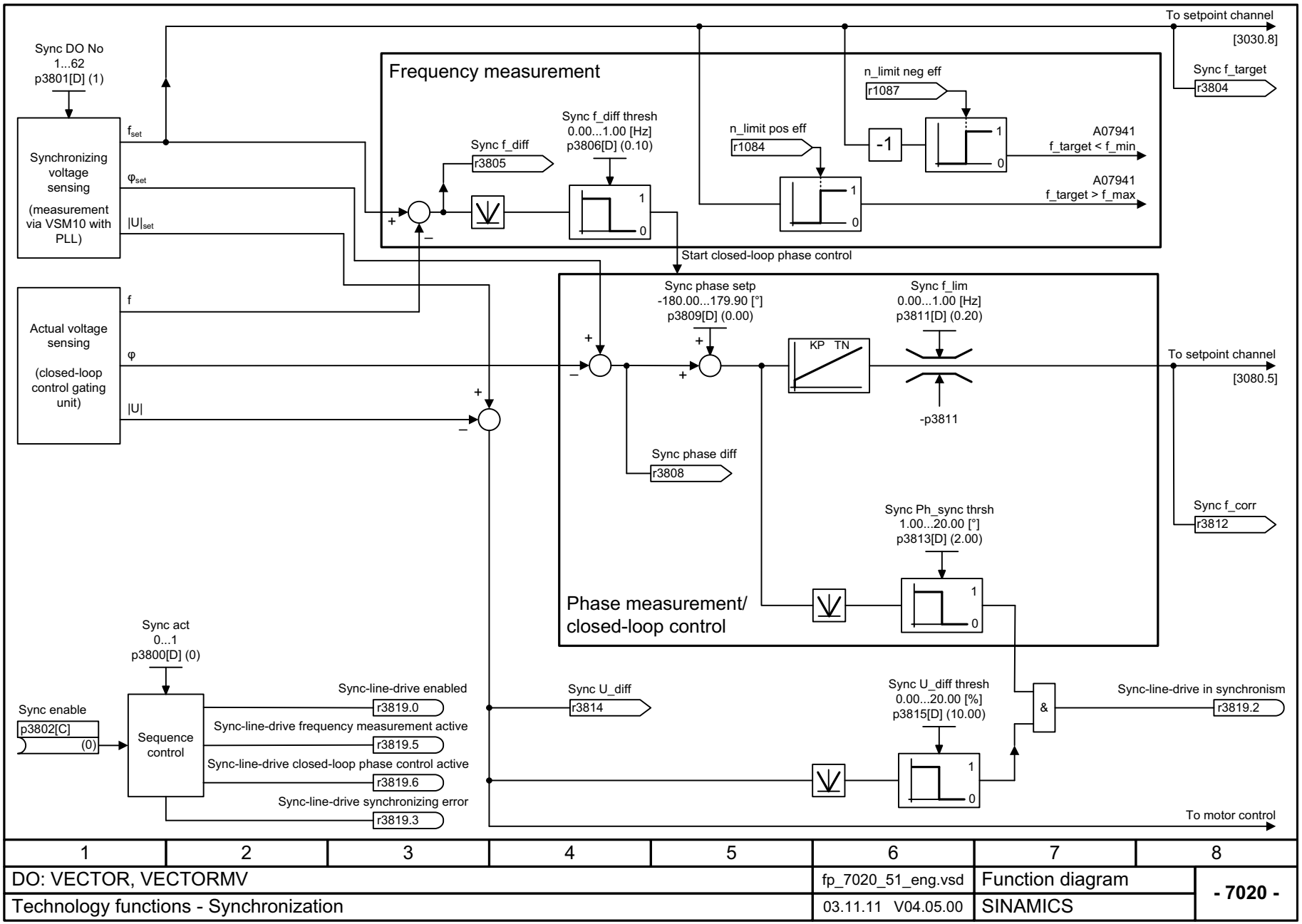

1	2	3	4	5	6	7	8
DO: VECTOR, VECTORMV					fp_7020_51_eng.vsd	Function diagram	- 7020 -
Technology functions - Synchronization					03.11.11 V04.05.00	SINAMICS	

Fig. 2-142 7020 – Synchronization

© Siemens AG 2012 All Rights Reserved

2.16 Technology controller

Function diagrams

7950 – Fixed values, binary selection (r0108.16 = 1 and p2216 = 2)	2-1138
7951 – Fixed values, direct selection (r0108.16 = 1 and p2216 = 1)	2-1139
7954 – Motorized potentiometer (r0108.16 = 1)	2-1140
7958 – Closed-loop control (r0108.16 = 1)	2-1141
7960 – DC-link voltage controller (r0108.16 = 1)	2-1142

© Siemens AG 2012 All Rights Reserved

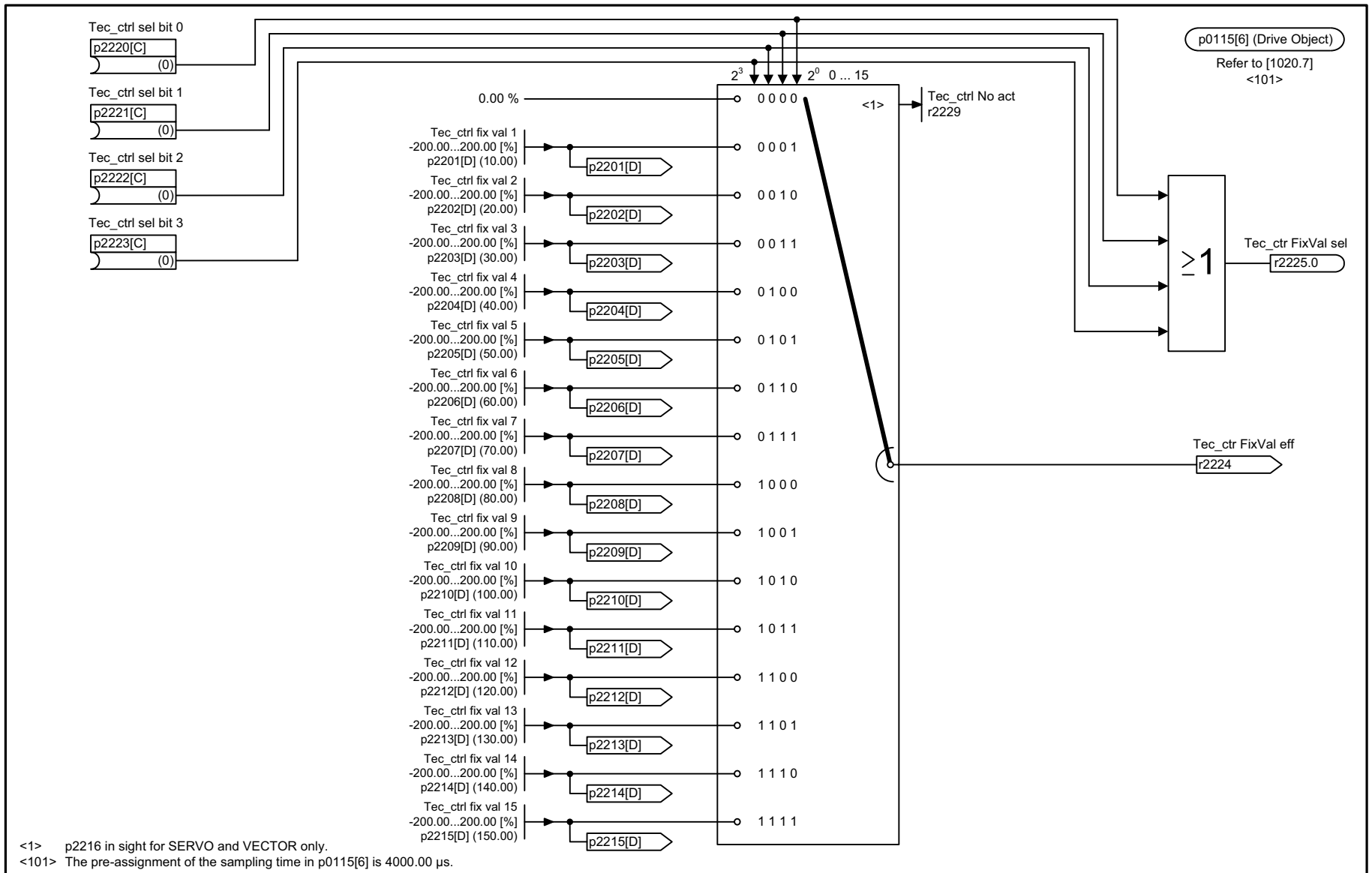

<1> p2216 in sight for SERVO and VECTOR only.
<101> The pre-assignment of the sampling time in p0115[6] is 4000.00 µs.

1	2	3	4	5	6	7	8
DO: SERVO, VECTOR, VECTORMV					fp_7950_51_eng.vsd	Function diagram	- 7950 -
Technology controller - Fixed value selection binary (r0108.16 = 1 and p2216 = 2)					09.04.10 V04.05.00	SINAMICS	

Fig. 2-143 7950 – Fixed values, binary selection (r0108.16 = 1 and p2216 = 2)

© Siemens AG 2012 All Rights Reserved

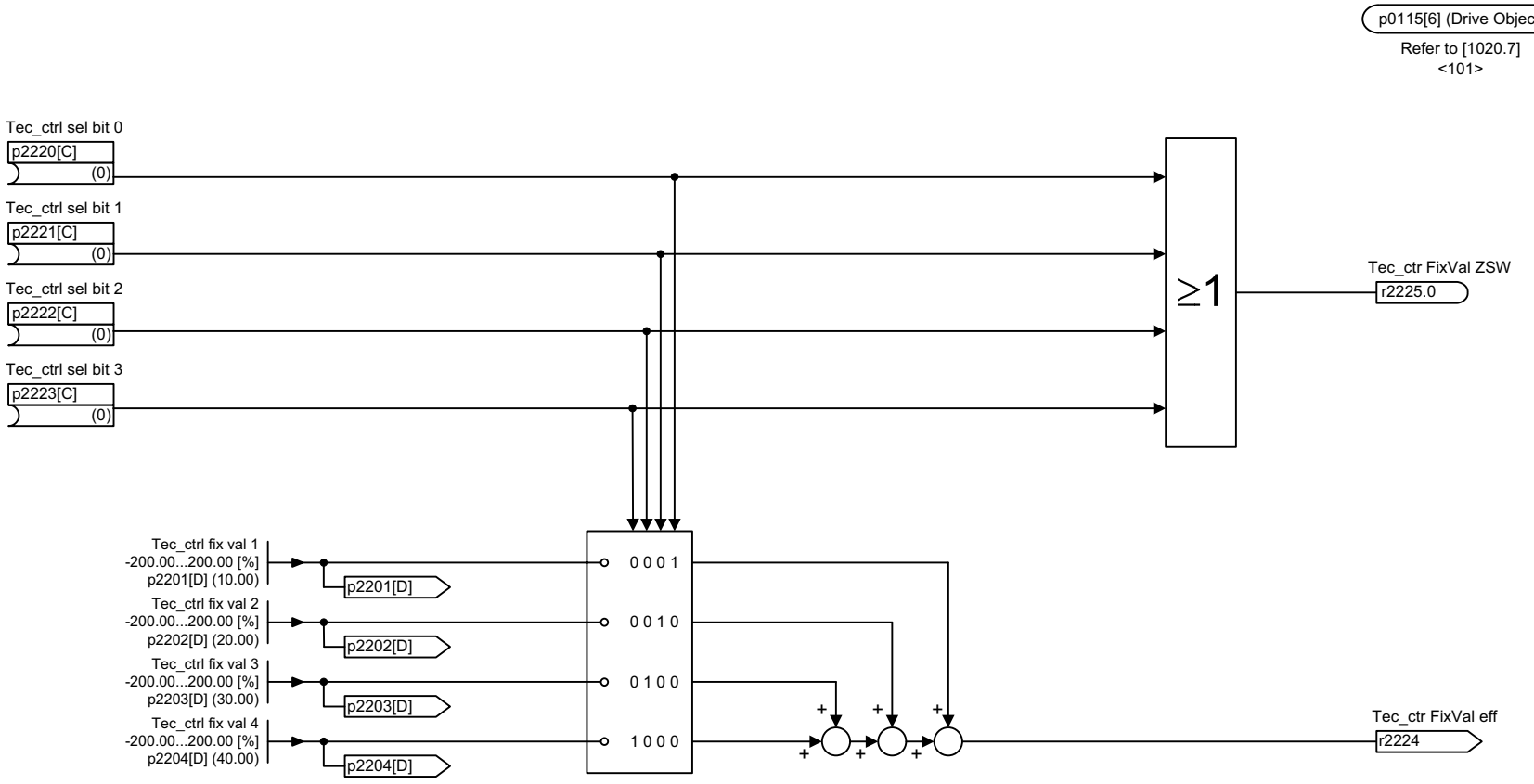

<101> The pre-assignment of the sampling time in p0115[6] is 4000.00 µs.

1	2	3	4	5	6	7	8
DO: SERVO, VECTOR					fp_7951_54_eng.vsd	Function diagram	- 7951 -
Technology controller - Fixed value selection direct (r0108.16 = 1 and p2216 = 1)					18.10.10 V04.05.00	S120/S150/G130/G150	

Fig. 2-144 7951 – Fixed values, direct selection (r0108.16 = 1 and p2216 = 1)

© Siemens AG 2012 All Rights Reserved

Fig. 2-145 7954 – Motorized potentiometer (r0108.16 = 1)

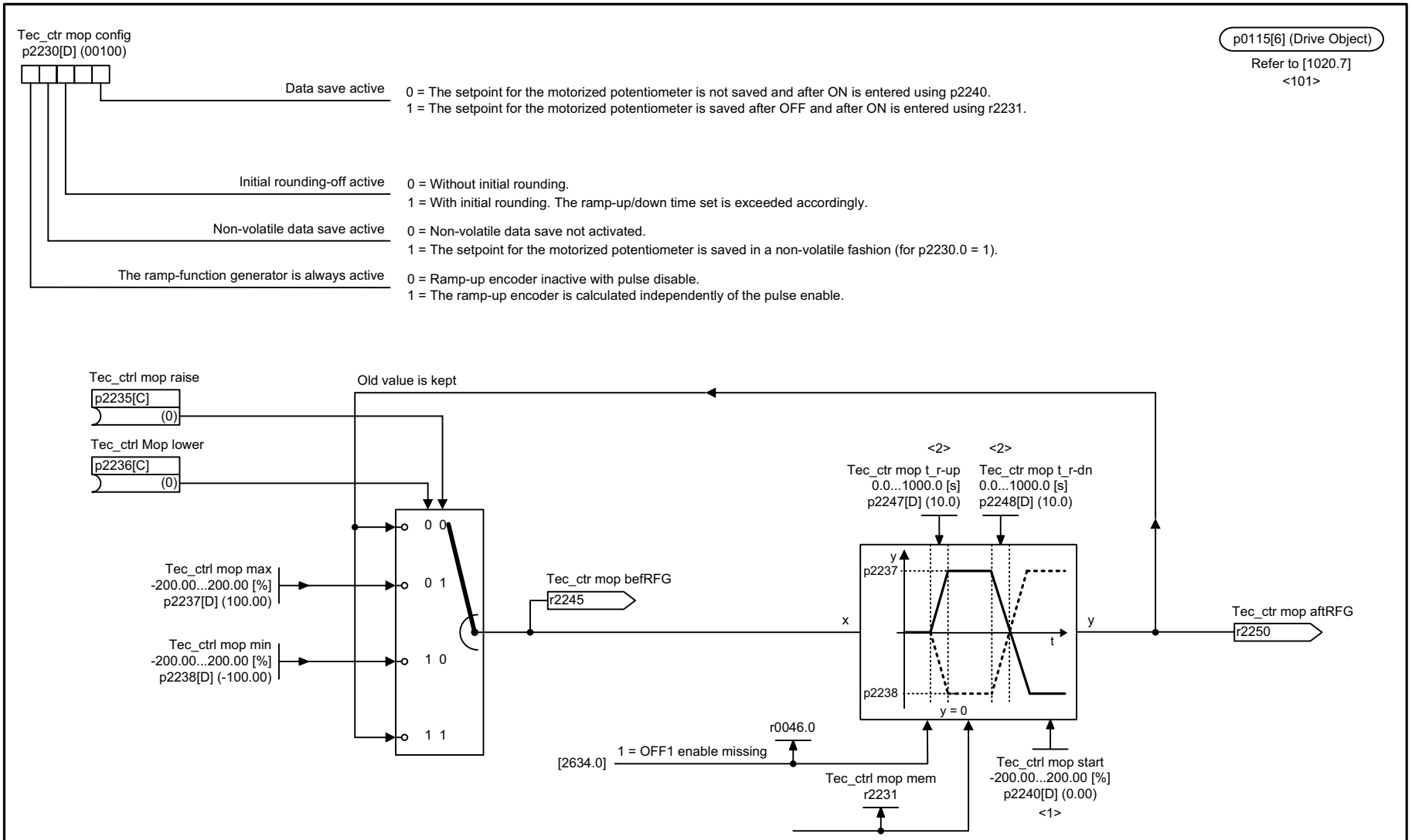

<1> For p2230.0 = 0, this setpoint is entered after ON.
<2> If initial rounding-off is active (p2230.2 = 1), the selected ramp-up/down times are exceeded accordingly.
<101> The pre-assignment of the sampling time in p0115[6] is 4000.00 µs.

1	2	3	4	5	6	7	8
DO: SERVO, VECTOR, VECTORMV					fp_7954_51_eng.vsd	Function diagram	- 7954 -
Technology controller - Motorized potentiometer (r0108.16 = 1)					19.10.10 V04.05.00	SINAMICS	

© Siemens AG 2012 All Rights Reserved

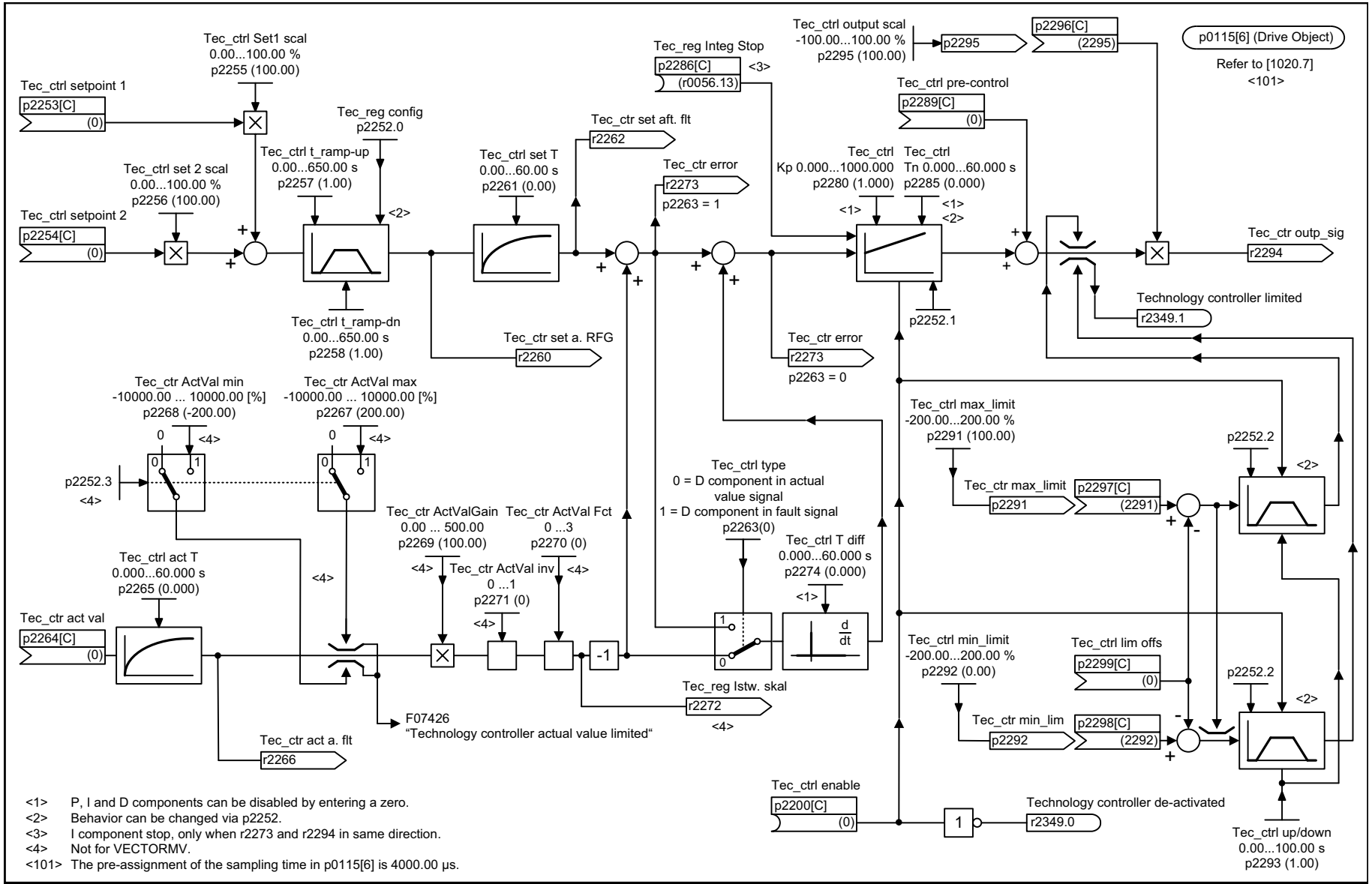

<1> P, I and D components can be disabled by entering a zero.
<2> Behavior can be changed via p2252.
<3> I component stop, only when r2273 and r2294 in same direction.
<4> Not for VECTORMV.
<101> The pre-assignment of the sampling time in p0115[6] is 4000.00 µs.

1	2	3	4	5	6	7	8
DO: SERVO, VECTOR, VECTORMV					fp_7958_51_eng.vsd	Function diagram	- 7958 -
Technology controller - Closed-loop control (r0108.16 = 1)					09.03.11 V04.05.00	SINAMICS	

Fig. 2-146 7958 – Closed-loop control (r0108.16 = 1)

© Siemens AG 2012 All Rights Reserved

Fig. 2-147 7960 – DC-link voltage controller (r0108.16 = 1)

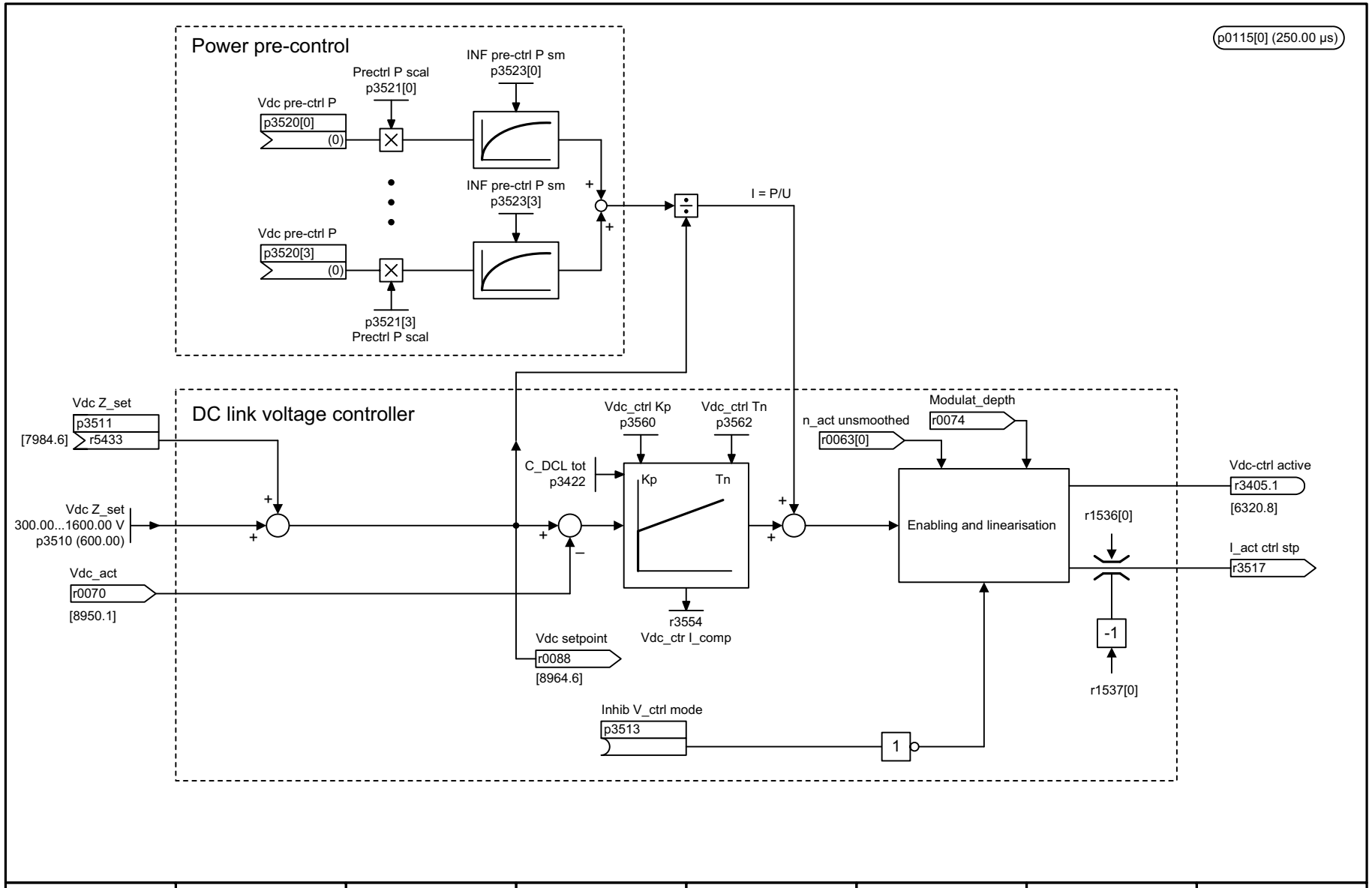

1	2	3	4	5	6	7	8
DO: VECTOR					fp_7960_54_eng.vsd	Function diagram	- 7960 -
Technology controller - DC link voltage controller (r0108.16 = 1)					09.11.11 V04.05.00	S120/S150/G130/G150	

© Siemens AG 2012 All Rights Reserved

2.17 Signals and monitoring functions

Function diagrams

8010 – Speed signals 1	2-1144
8011 – Speed signals 2	2-1145
8012 – Torque signals, motor locked/stalled	2-1146
8013 – Load monitoring (r0108.17 = 1)	2-1147
8014 – Thermal monitoring, power unit	2-1148
8016 – Thermal monitoring, motor	2-1149
8017 – Thermal motor models (p0300 = xxx)	2-1150

© Siemens AG 2012 All Rights Reserved

Fig. 2-148 8010 – Speed signals 1

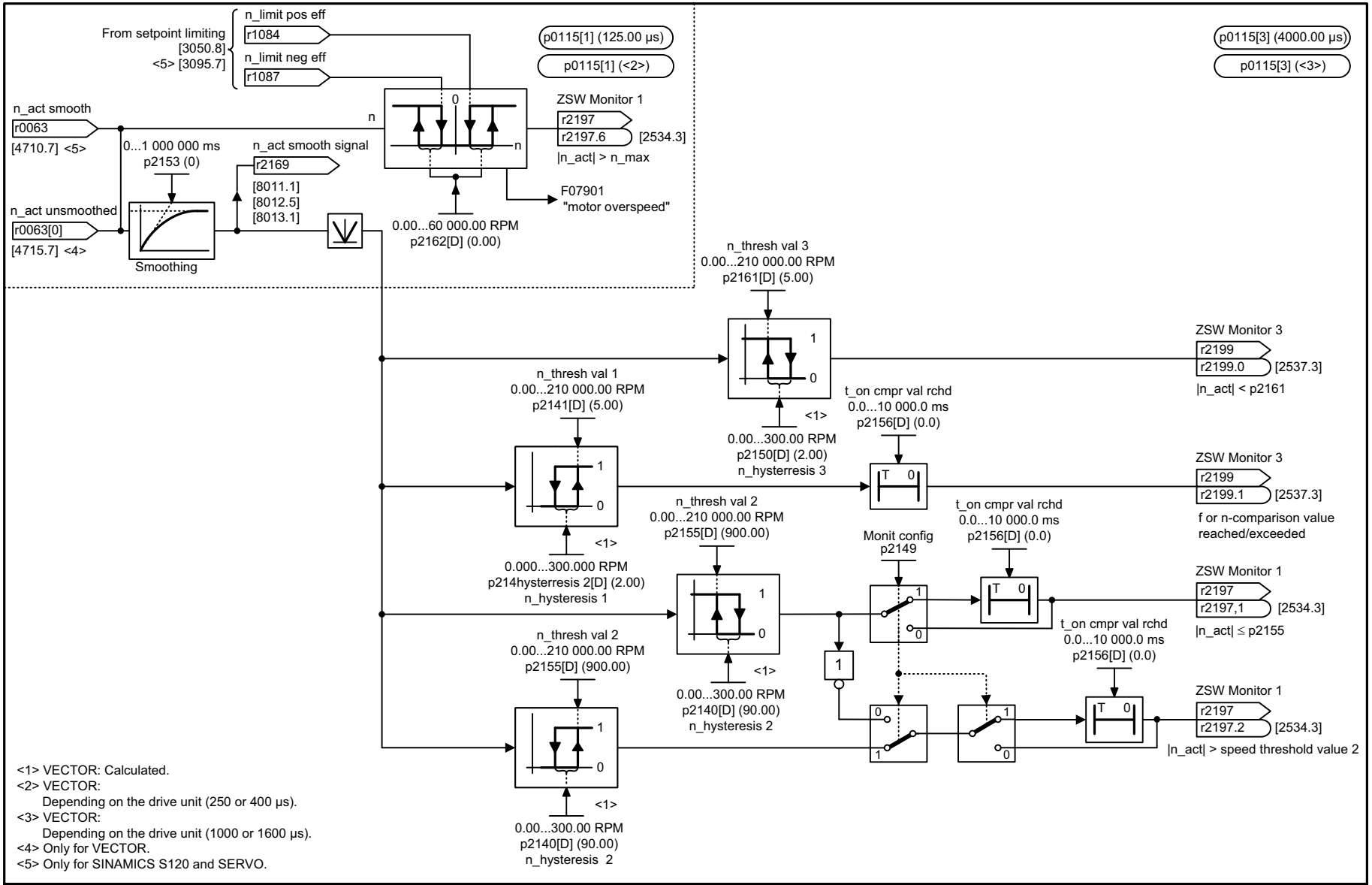

1	2	3	4	5	6	7	8
DO: SERVO, VECTOR					fp_8010_54_eng.vsd	Function diagram	- 8010 -
Signals and monitoring functions - Speed signals 1					20.04.10 V04.05.00	S120/S150/G130/G150	

© Siemens AG 2012 All Rights Reserved

Fig. 2-149 8011 – Speed signals 2

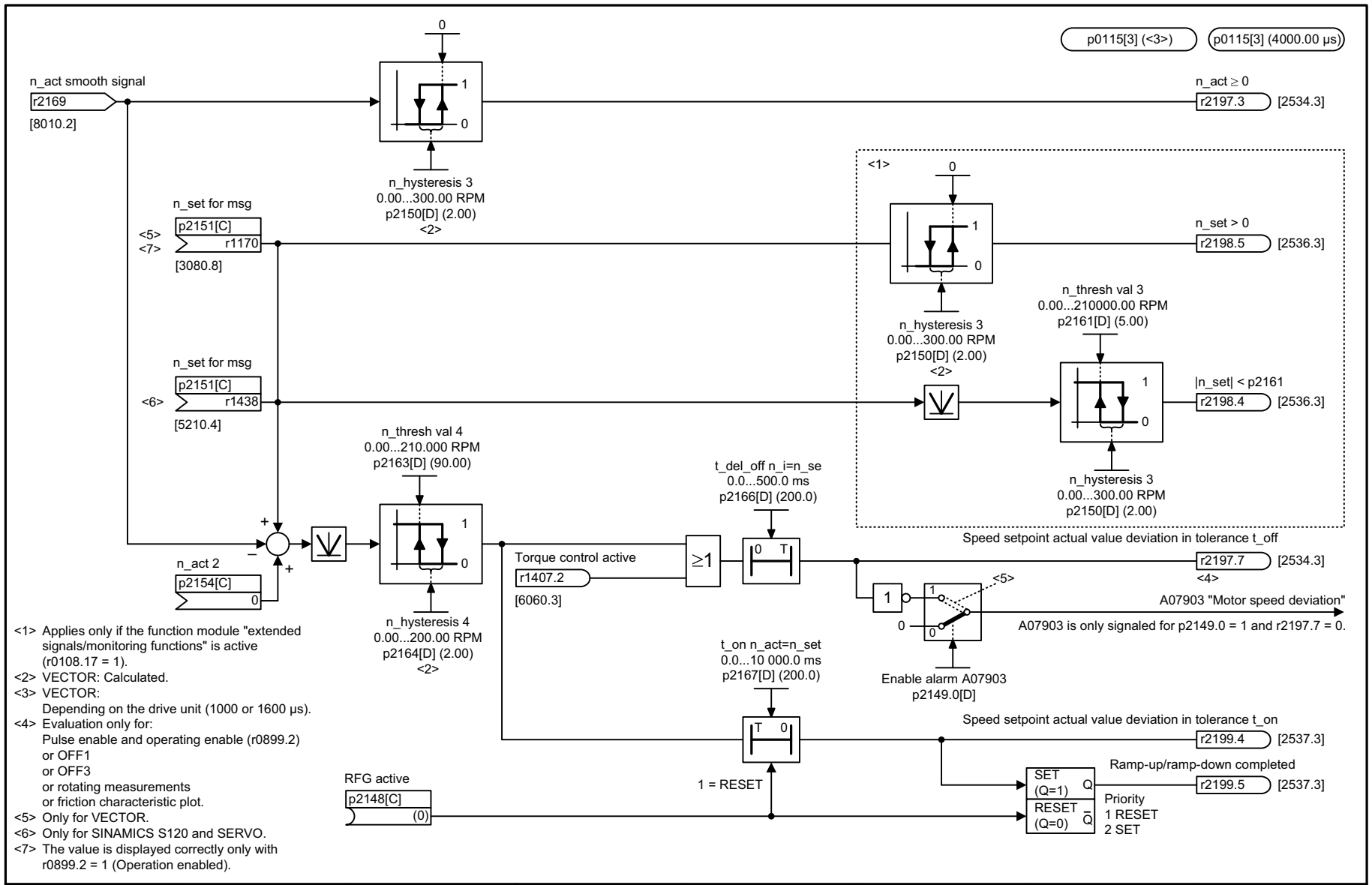

<1> Applies only if the function module "extended signals/monitoring functions" is active (r0108.17 = 1).
<2> VECTOR: Calculated.
<3> VECTOR: Depending on the drive unit (1000 or 1600 µs).
<4> Evaluation only for: Pulse enable and operating enable (r0899.2) or OFF1 or OFF3 or rotating measurements or friction characteristic plot.
<5> Only for VECTOR.
<6> Only for SINAMICS S120 and SERVO.
<7> The value is displayed correctly only with r0899.2 = 1 (Operation enabled).

1	2	3	4	5	6	7	8
DO: SERVO, VECTOR					fp_8011_54_eng.vsd	Function diagram	- 8011 -
Signals and monitoring functions - Speed signals 2					01.04.11 V04.05.00	S120/S150/G130/G150	

© Siemens AG 2012 All Rights Reserved

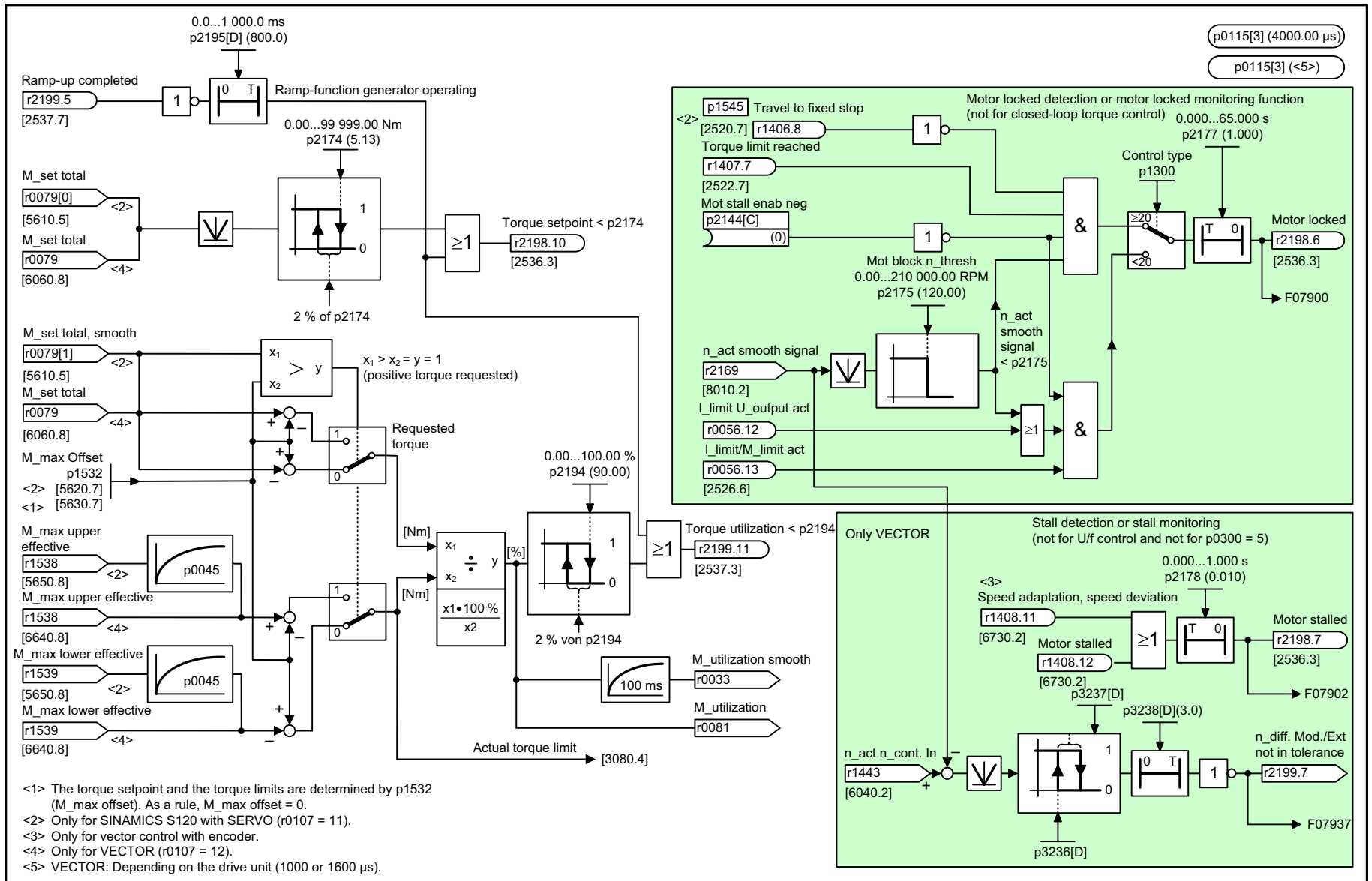

<1> The torque setpoint and the torque limits are determined by p1532 (M_max offset). As a rule, M_max offset = 0.
<2> Only for SINAMICS S120 with SERVO (r0107 = 11).
<3> Only for vector control with encoder.
<4> Only for VECTOR (r0107 = 12).
<5> VECTOR: Depending on the drive unit (1000 or 1600 µs).

1	2	3	4	5	6	7	8
DO: SERVO, VECTOR					fp_8012_54_eng.vsd	Function diagram	- 8012 -
Signals and monitoring functions - Torque signals, motor locked/stalled					25.08.10 V04.05.00	S120/S150/G130/G150	

Fig. 2-150 8012 – Torque signals, motor locked/stalled

© Siemens AG 2012 All Rights Reserved

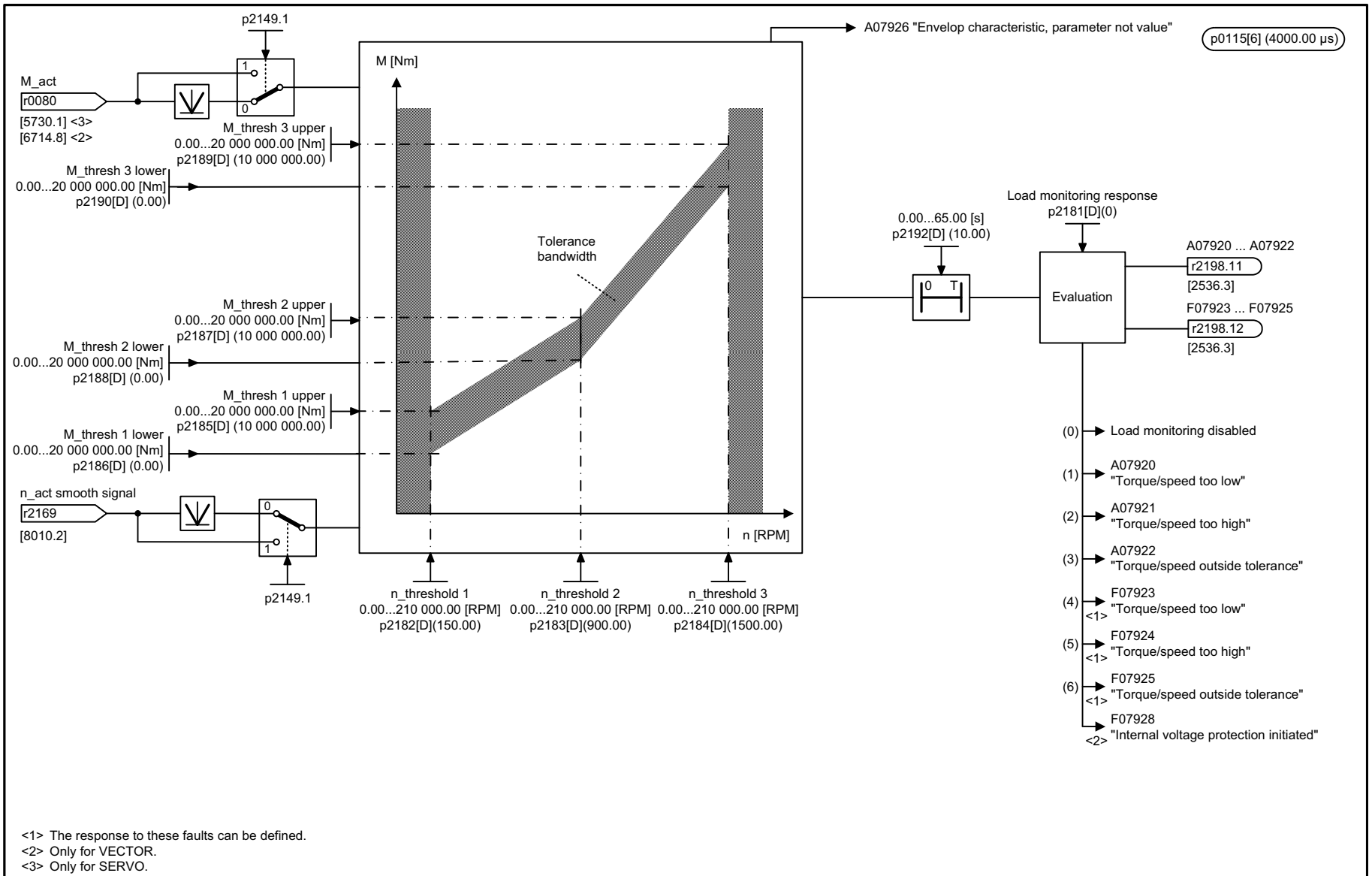

<1> The response to these faults can be defined.
<2> Only for VECTOR.
<3> Only for SERVO.

1	2	3	4	5	6	7	8
DO: SERVO, VECTOR					fp_8013_54_eng.vsd	Function diagram	- 8013 -
Signals and monitoring functions - Load monitoring (r0108.17 = 1)					30.04.10 V04.05.00	S120/S150/G130/G150	

Fig. 2-151 8013 – Load monitoring (r0108.17 = 1)

© Siemens AG 2012 All Rights Reserved

Fig. 2-152 8014 – Thermal monitoring, power unit

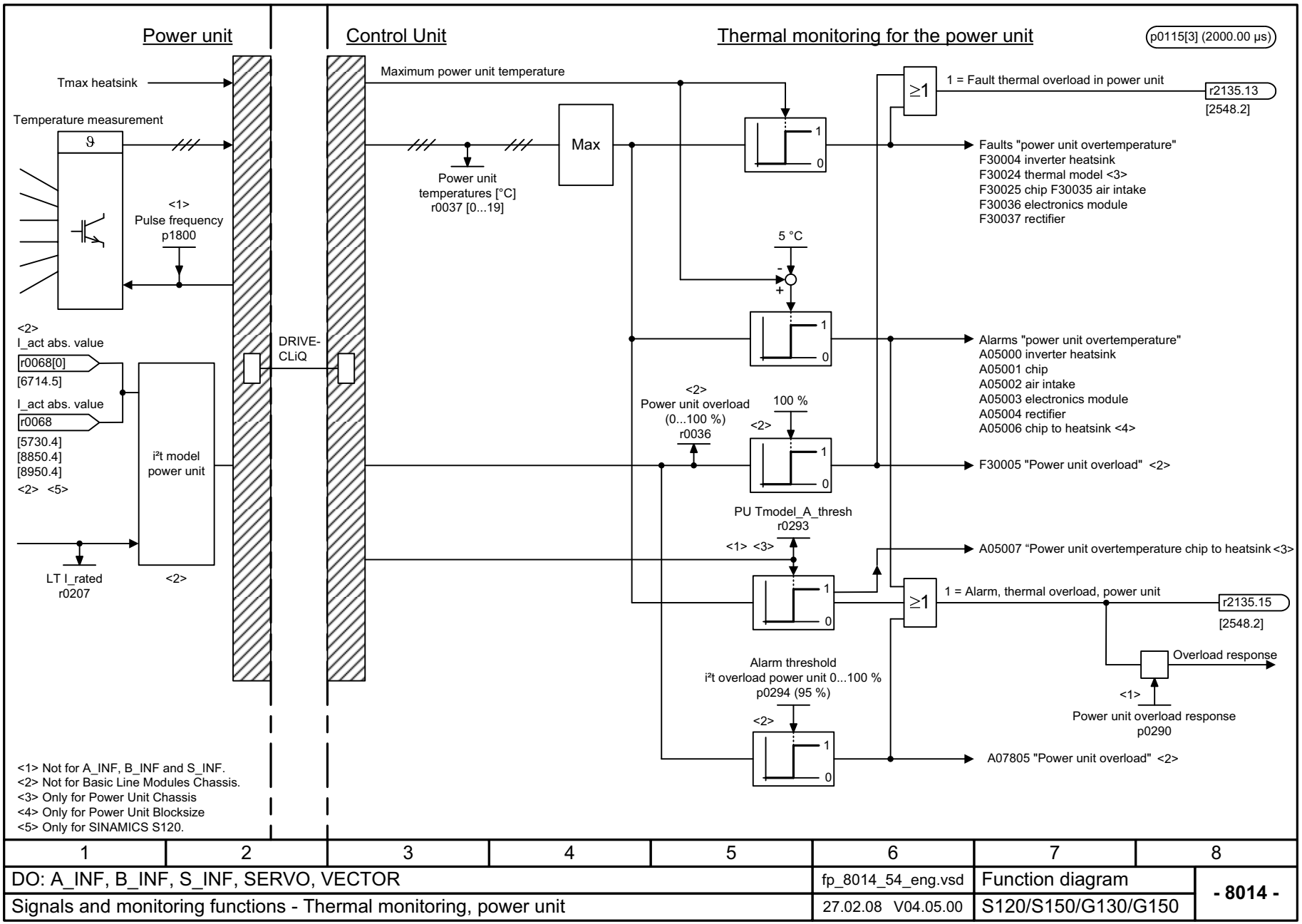

1	2	3	4	5	6	7	8
DO: A_INF, B_INF, S_INF, SERVO, VECTOR					fp_8014_54_eng.vsd	Function diagram	- 8014 -
Signals and monitoring functions - Thermal monitoring, power unit					27.02.08 V04.05.00	S120/S150/G130/G150	

© Siemens AG 2012 All Rights Reserved

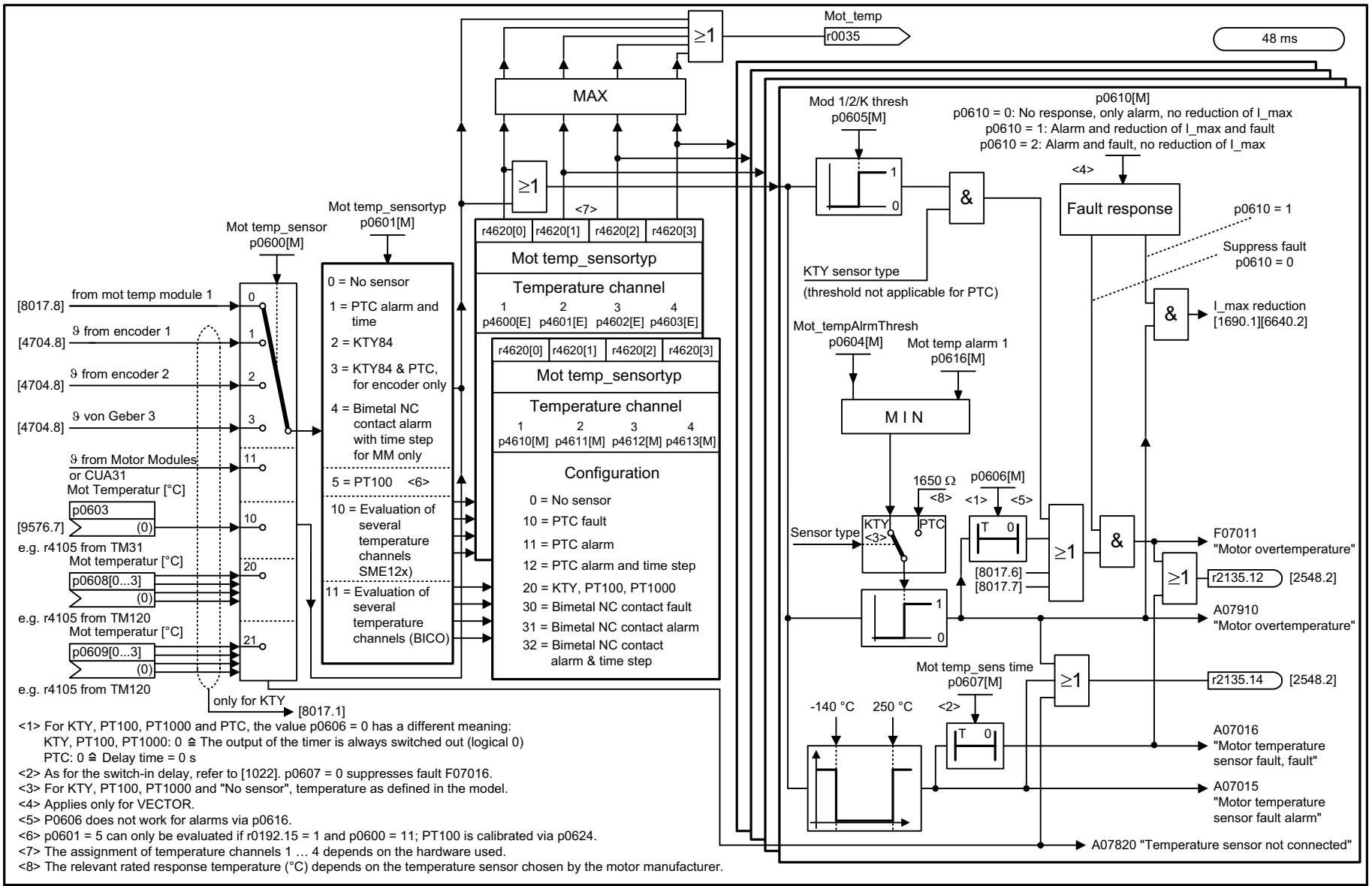

<1> For KTY, PT100, PT1000 and PTC, the value p0606 = 0 has a different meaning:
KTY, PT100, PT1000: 0 ≙ The output of the timer is always switched out (logical 0)
PTC: 0 ≙ Delay time = 0 s
<2> As for the switch-in delay, refer to [1022]. p0607 = 0 suppresses fault F07016.
<3> For KTY, PT100, PT1000 and "No sensor", temperature as defined in the model.
<4> Applies only for VECTOR.
<5> P0606 does not work for alarms via p0616.
<6> p0601 = 5 can only be evaluated if r0192.15 = 1 and p0600 = 11; PT100 is calibrated via p0624.
<7> The assignment of temperature channels 1 … 4 depends on the hardware used.
<8> The relevant rated response temperature (°C) depends on the temperature sensor chosen by the motor manufacturer.

1	2	3	4	5	6	7	8
DO: SERVO, VECTOR					fp_8016_54_eng.vsd	Function diagram	- 8016 -
Signals and monitoring functions - Thermal monitoring, motor					30.11.11 V04.05.00	S120/S150/G130/G150	

Fig. 2-153 8016 – Thermal monitoring, motor

© Siemens AG 2012 All Rights Reserved

Fig. 2-154 8017 – Thermal motor models (p0300 = xxx)

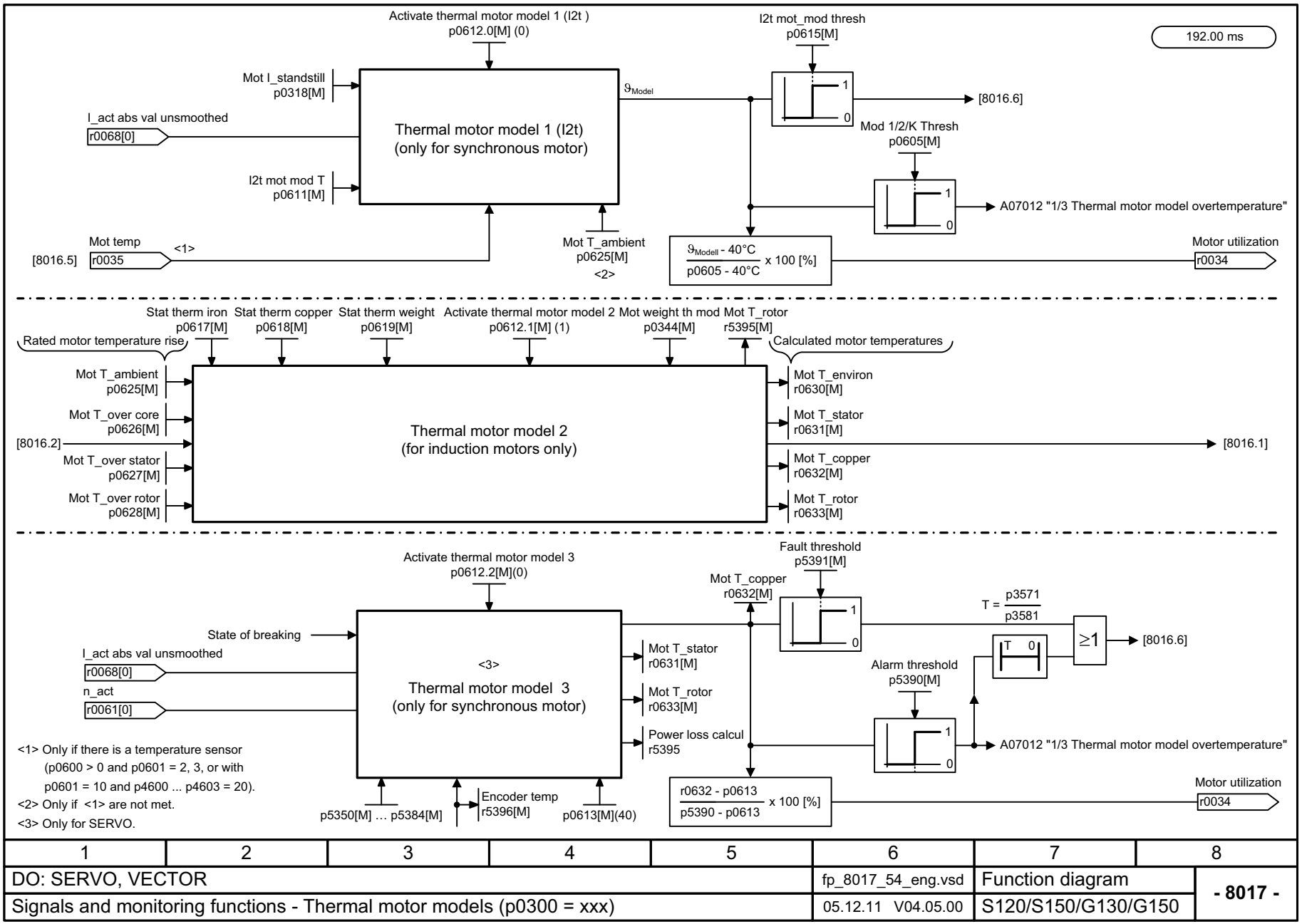

1	2	3	4	5	6	7	8
DO: SERVO, VECTOR					fp_8017_54_eng.vsd	Function diagram	- 8017 -
Signals and monitoring functions - Thermal motor models (p0300 = xxx)					05.12.11 V04.05.00	S120/S150/G130/G150	

© Siemens AG 2012 All Rights Reserved

2.18 Diagnostics

Function diagrams

8060 – Fault buffer	2-1152
8065 – Alarm buffer	2-1153
8070 – Fault/alarm trigger word (r2129)	2-1154
8075 – Fault/alarm configuration	2-1155
8134 – Measuring sockets	2-1156

© Siemens AG 2012 All Rights Reserved

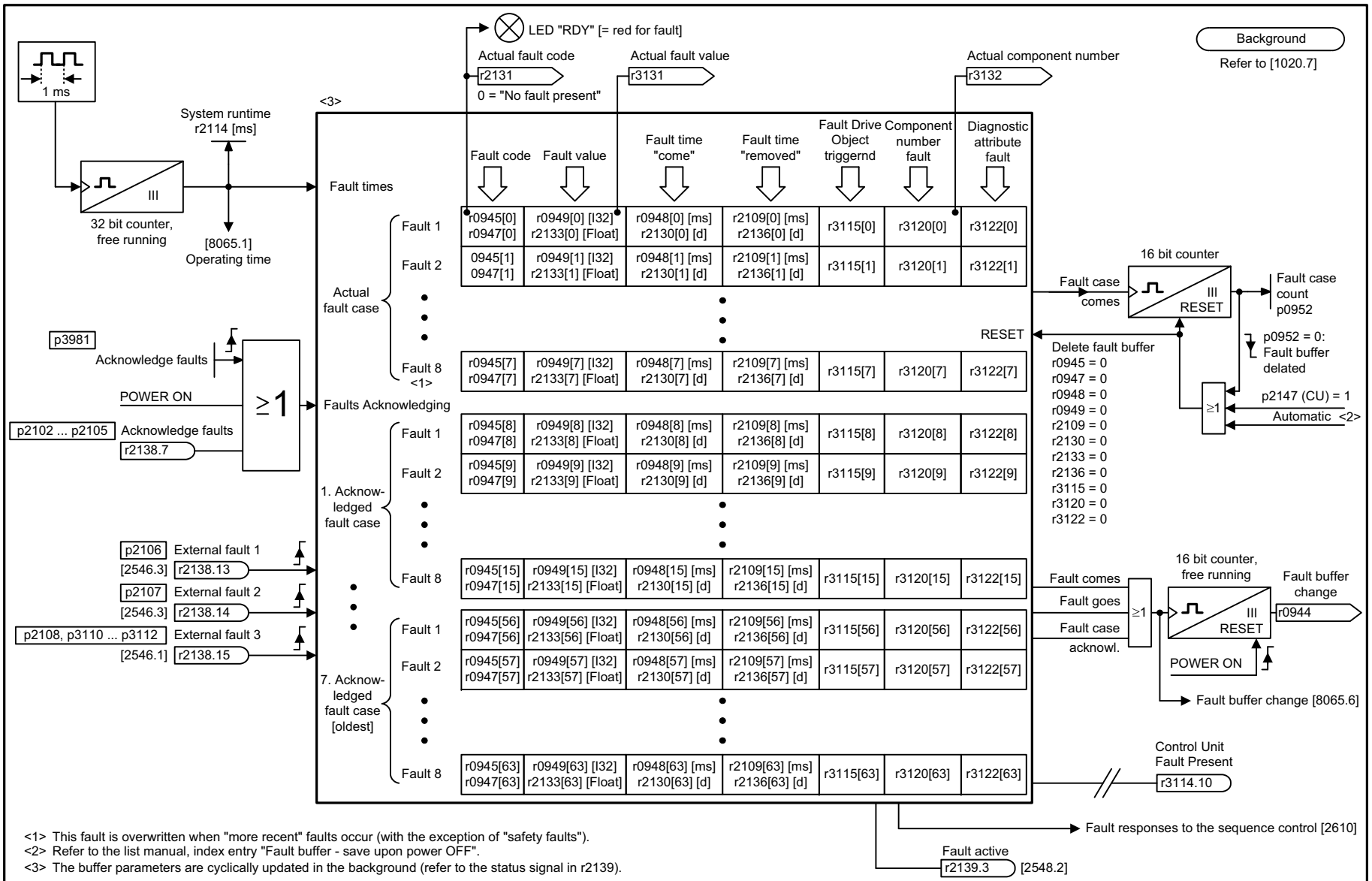

<1> This fault is overwritten when "more recent" faults occur (with the exception of "safety faults").
<2> Refer to the list manual, index entry "Fault buffer - save upon power OFF".
<3> The buffer parameters are cyclically updated in the background (refer to the status signal in r2139).

1	2	3	4	5	6	7	8
DO: All objects					fp_8060_51_eng.vsd	Function diagram	- 8060 -
Diagnostics - Fault buffer					07.12.10 V04.05.00	SINAMICS	

Fig. 2-155 8060 – Fault buffer

© Siemens AG 2012 All Rights Reserved

Fig. 2-156 8065 – Alarm buffer

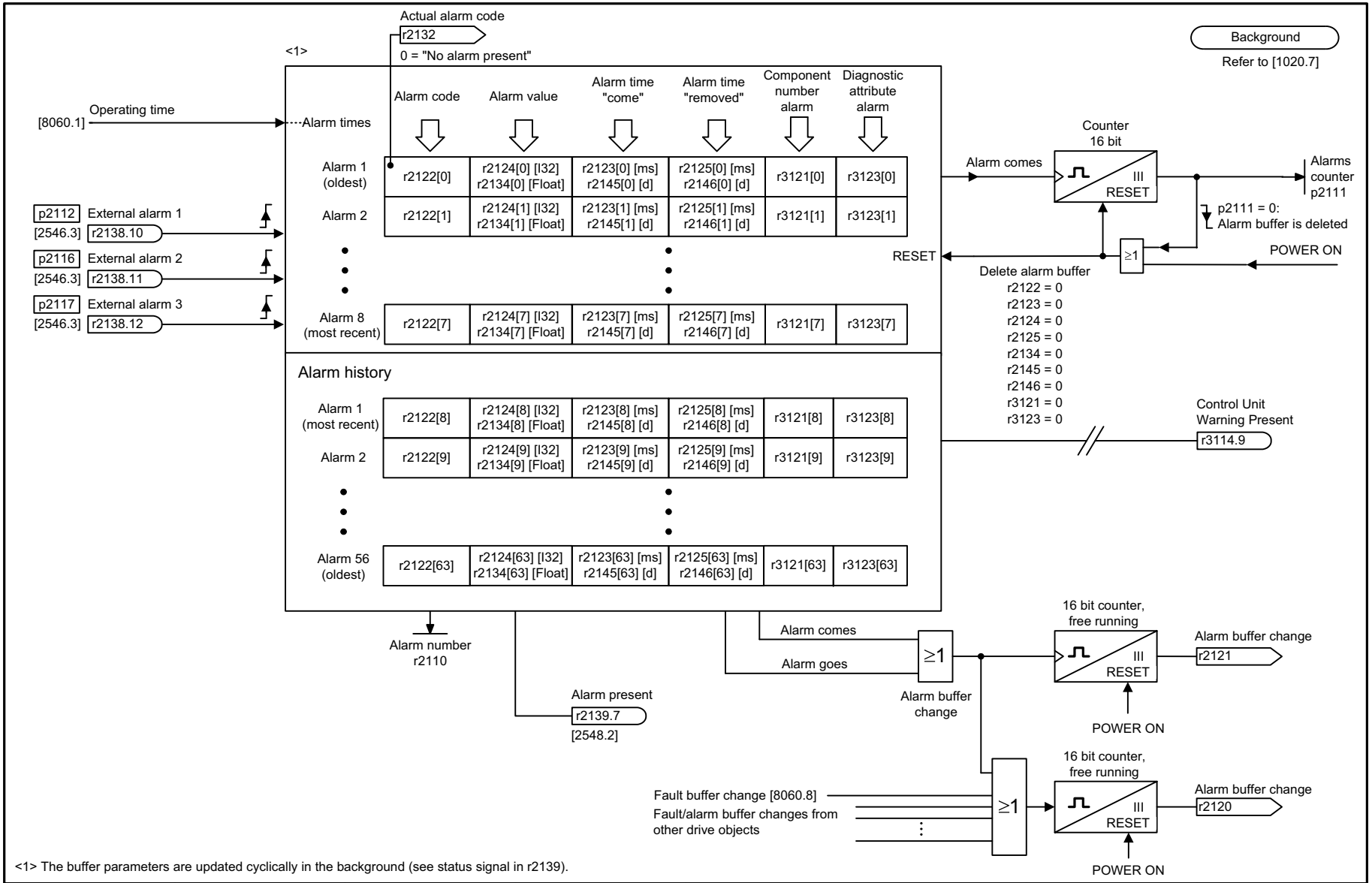

<1> The buffer parameters are updated cyclically in the background (see status signal in r2139).

1	2	3	4	5	6	7	8
DO: All objects					fp_8065_51_eng.vsd	Function diagram	- 8065 -
Diagnostics - Alarm buffer					08.04.11 V04.05.00	SINAMICS	

© Siemens AG 2012 All Rights Reserved

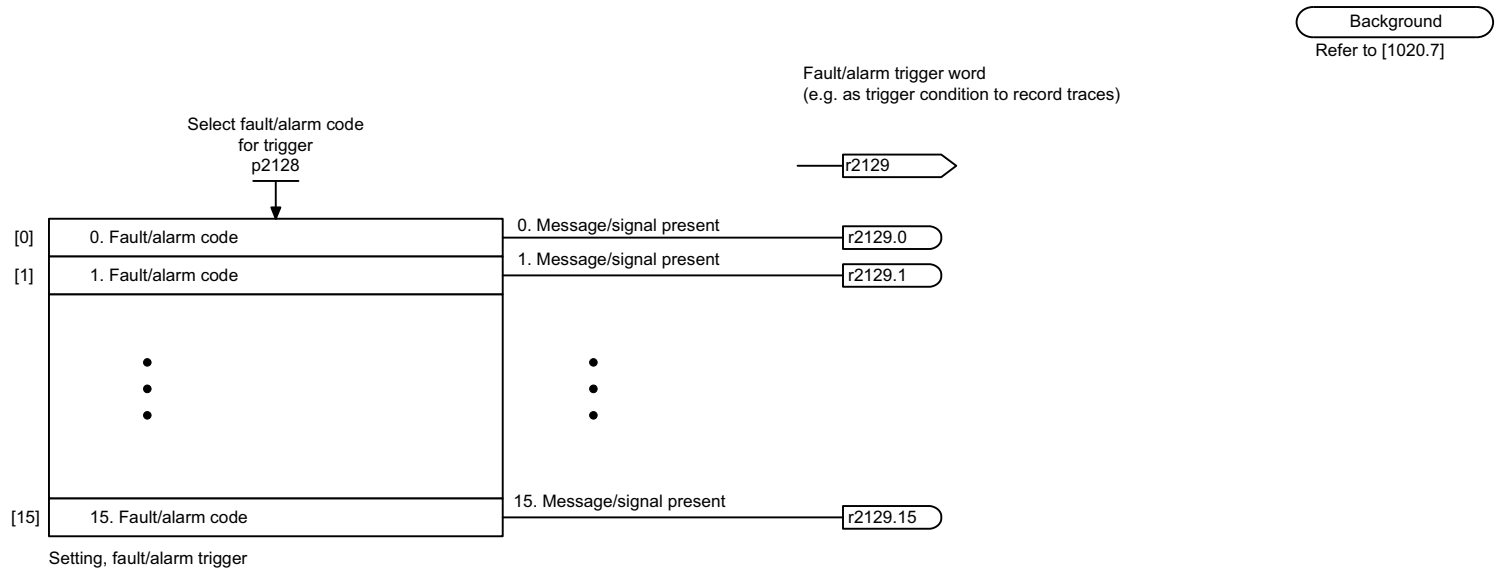

1	2	3	4	5	6	7	8
DO: All objects					fp_8070_51_eng.vsd	Function diagram	- 8070 -
Diagnostics - Fault/alarm trigger word (r2129)					18.08.08 V04.05.00	SINAMICS	

Fig. 2-157 8070 – Fault/alarm trigger word (r2129)

© Siemens AG 2012 All Rights Reserved

Background

Refer to [1020.7]

Changing the fault response for maximum 20 faults <1>

Changing the message type - fault <==> alarm for maximum 20 faults/alarms <1>

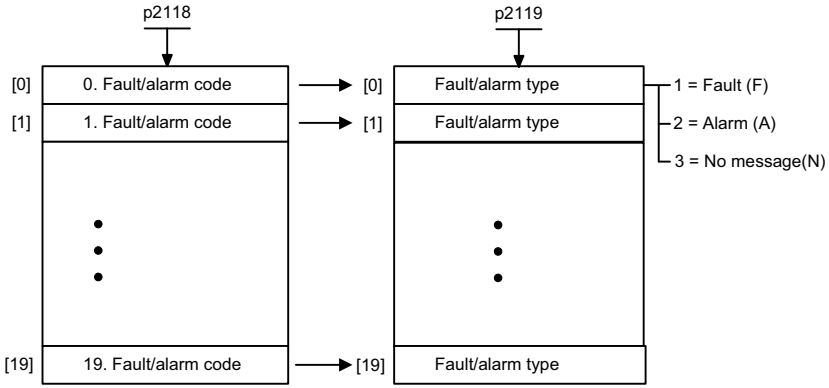

Changing the acknowledge mode for maximum 20 faults <1>

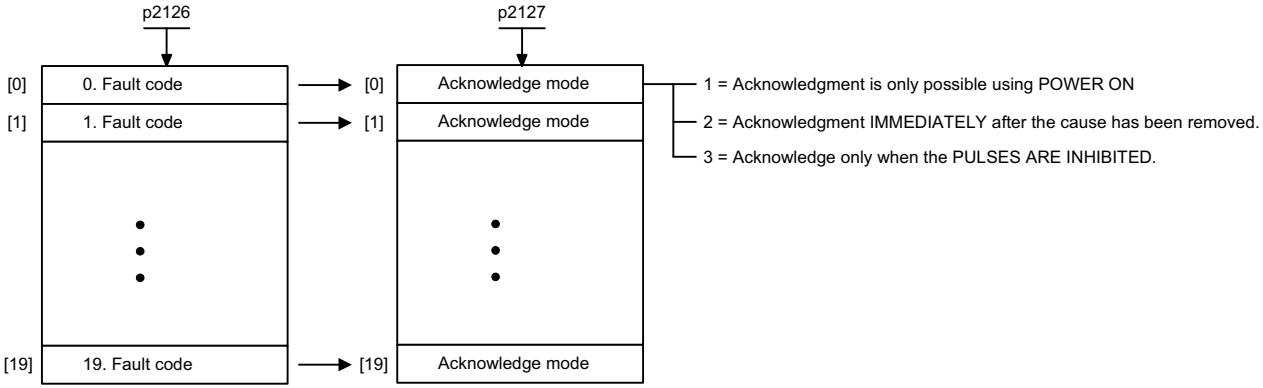

<1> The fault response, acknowledge mode and message type for all faults and alarms are set to meaningful default values in the factory setting.
Changes that may be required are only possible in specific value ranges specified by SIEMENS.
When the message type is changed, the supplementary information is tranferred from fault value r0949 to alarm value r2124 and vice versa.

1	2	3	4	5	6	7	8
DO: All objects					fp_8075_51_eng.vsd	Function diagram	- 8075 -
Diagnostics - Fault/alarm configuration					07.09.09 V04.05.00	SINAMICS	

Fig. 2-158 8075 – Fault/alarm configuration

© Siemens AG 2012 All Rights Reserved

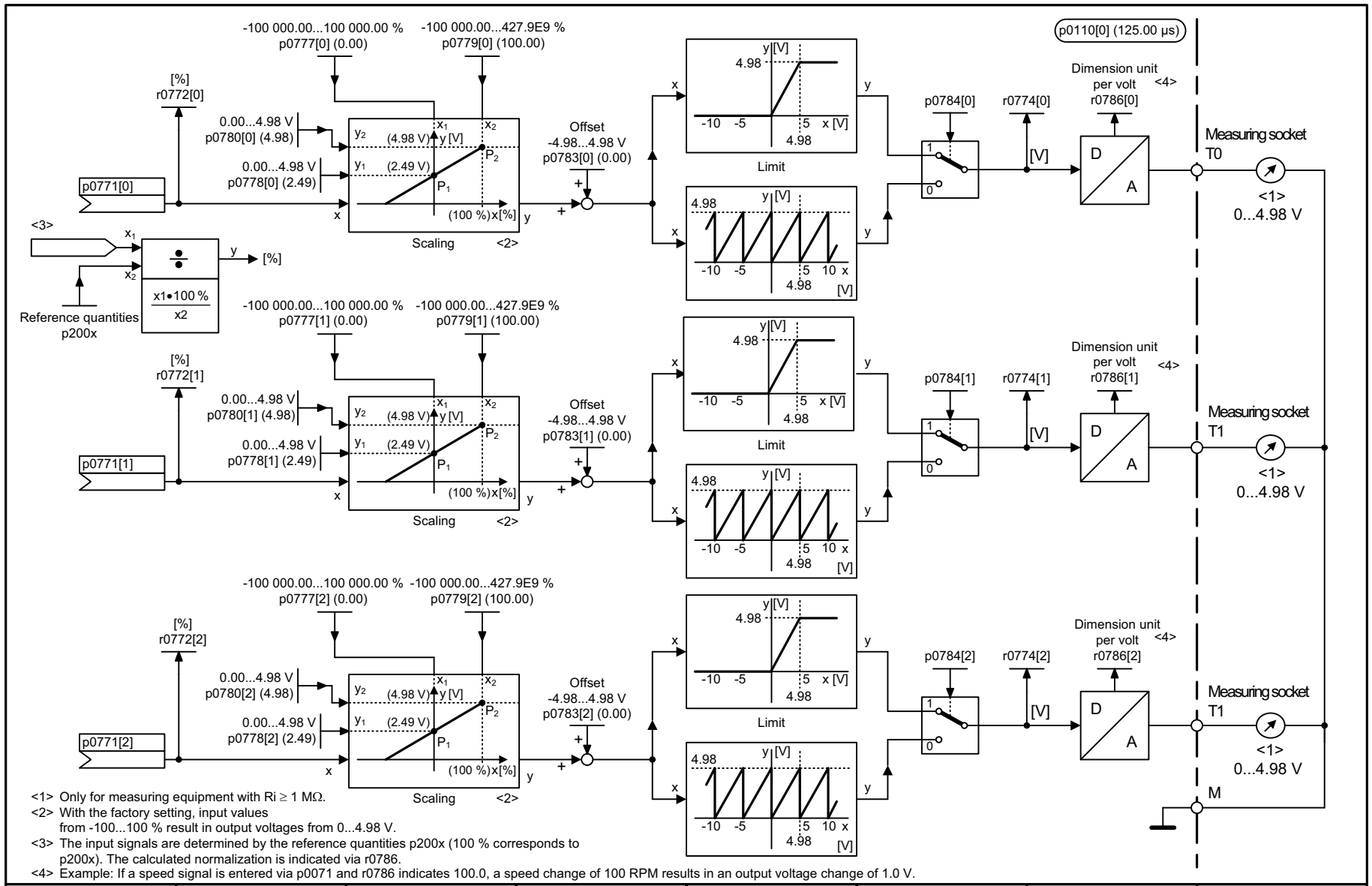

<1> Only for measuring equipment with Ri ≥ 1 MΩ.
<2> With the factory setting, input values from -100...100 % result in output voltages from 0...4.98 V.
<3> The input signals are determined by the reference quantities p200x (100 % corresponds to p200x). The calculated normalization is indicated via r0786.
<4> Example: If a speed signal is entered via p0071 and r0786 indicates 100.0, a speed change of 100 RPM results in an output voltage change of 1.0 V.

1	2	3	4	5	6	7	8
DO: CU_CX32, CU_G, CU_GL, CU_GM, CU_I, CU_MV, CU_S, CU_SL					fp_8134_51_eng.vsd	Function diagram	- 8134 -
Diagnostics - Measuring sockets					07.11.11 V04.05.00	SINAMICS	

Fig. 2-159 8134 – Measuring sockets

© Siemens AG 2012 All Rights Reserved

2.19 Data sets

Function diagrams

8560 – Command Data Sets (CDS)	2-1158
8565 – Drive Data Sets (DDS)	2-1159
8570 – Encoder Data Sets (EDS)	2-1160
8575 – Motor Data Sets (MDS)	2-1161
8580 – Power unit Data Sets (PDS)	2-1162

© Siemens AG 2012 All Rights Reserved

Not relevant
Refer to [1020.7]

Example:
Change over Command Data Set
CDS0 --> CDS1

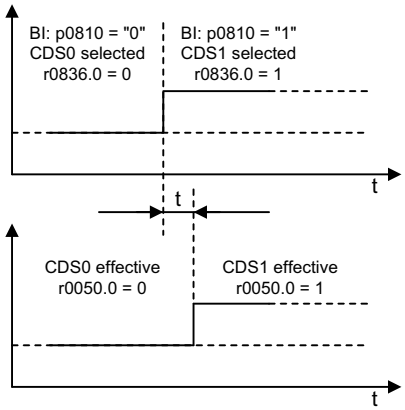

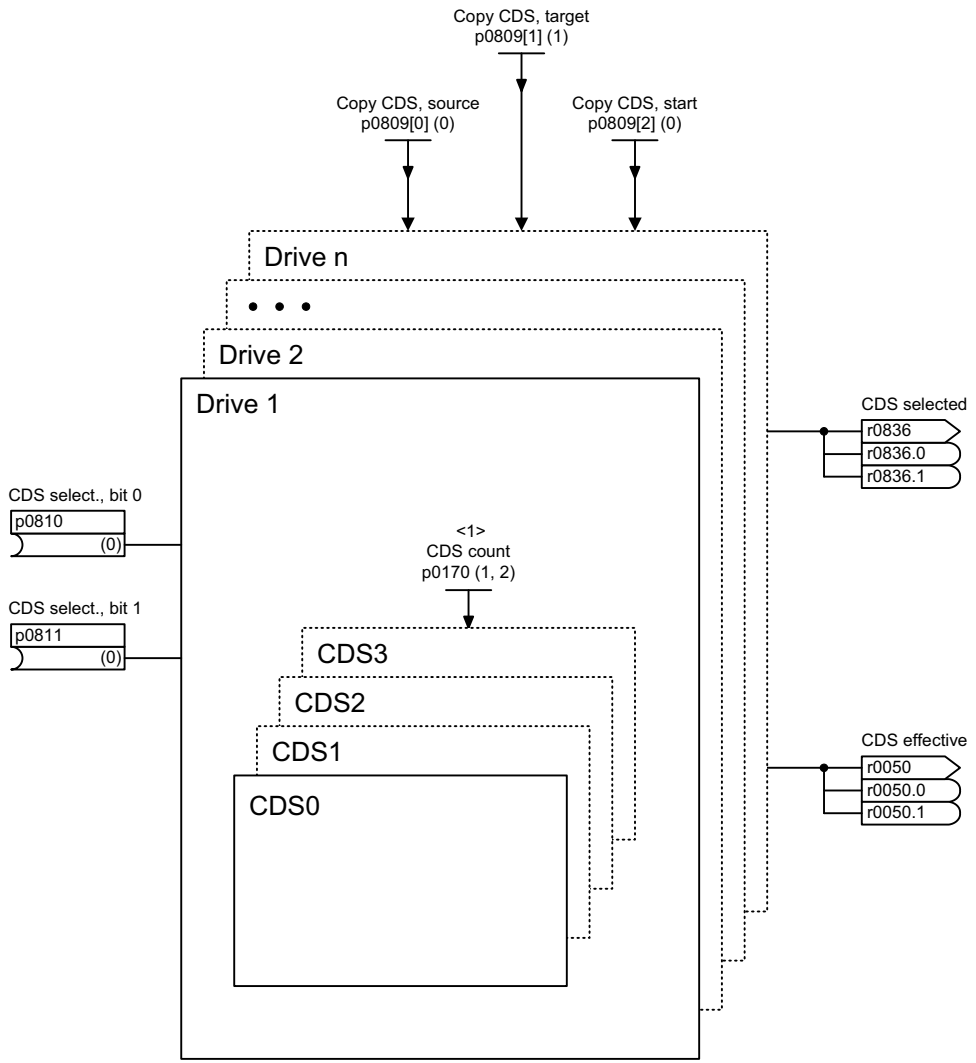

<1> For SERVO, the following applies: Min / Max / Factory setting: 1 / 2 / 2.
For VECTOR, the following applies: Min / Max / Factory setting: 2 / 4 / 2.

1	2	3	4	5	6	7	8
DO: SERVO, VECTOR					fp_8560_54_eng.vsd	Function diagram	- 8560 -
Data sets - Command Data Sets (CDS)					20.10.08 V04.05.00	S120/S150/G130/G150	

Fig. 2-160 8560 – Command Data Sets (CDS)

© Siemens AG 2012 All Rights Reserved

Not relevant
Refer to [1020.7]

DDS (Drive Data Set)
• • •
p0186[0...n] (MDS number)
p0187[0...n] (enc 1 EDS number)
p0188[0...n] (enc 2 EDS number) <2>
p0189[0...n] (enc 3 EDS number) <2>
• • •

EDS (Encoder Data Set)

MDS (Motor Data Set)

Copy DDS, target
p0819[1] (1)

Copy DDS, source
p0819[0] (0)

Copy DDS, start
p0819[2] (0)

Drive n
• • •
Drive 2
Drive 1

Select DDS bit 0
p0820[C]
(0)

Select DDS bit 1
p0821[C]
(0)

Select DDS bit 2
p0822[C]
(0)

Select DDS bit 3
p0823[C]
(0)

Select DDS bit 4
p0824[C]
(0)

DDS number
p0180 (1)

DDS31
• • •
DDS1
<1> DDS0

r0838
r0838[0] Motor data set MDS selected
r0049[1] Encoder 1 encoder data set EDS selected
r0838[2] Encoder 2 encoder data set EDS selected <2>
r0838[3] Encoder 3 encoder data set EDS selected <2>

DDS selected
r0837
r0837.0
r0837.1
r0837.2
r0837.3
r0837.4

A07530 "Drive data set does not exist"

DDS effective
r0051
r0051.0
r0051.1
r0051.2
r0051.3
r0051.4

r0049
r0049[0] Motor data set MDS effective
r0049[1] Encoder 1 encoder data set EDS effective
r0049[2] Encoder 2 encoder data set EDS effective <2>
r0049[3] Encoder 3 encoder data set EDS effective <2>

<1> A BICO interconnection to a parameter which is part of a drive data set always influences the currently effective data set.

<2> Only for SINAMICS S120/S150.

1	2	3	4	5	6	7	8
DO: SERVO, VECTOR, TM41					fp_8565_54_eng.vsd	Function diagram	- 8565 -
Data sets - Drive Data Sets (DDS)					25.06.08 V04.05.00	S120/S150/G130/G150	

Fig. 2-161 8565 – Drive Data Sets (DDS)

© Siemens AG 2012 All Rights Reserved

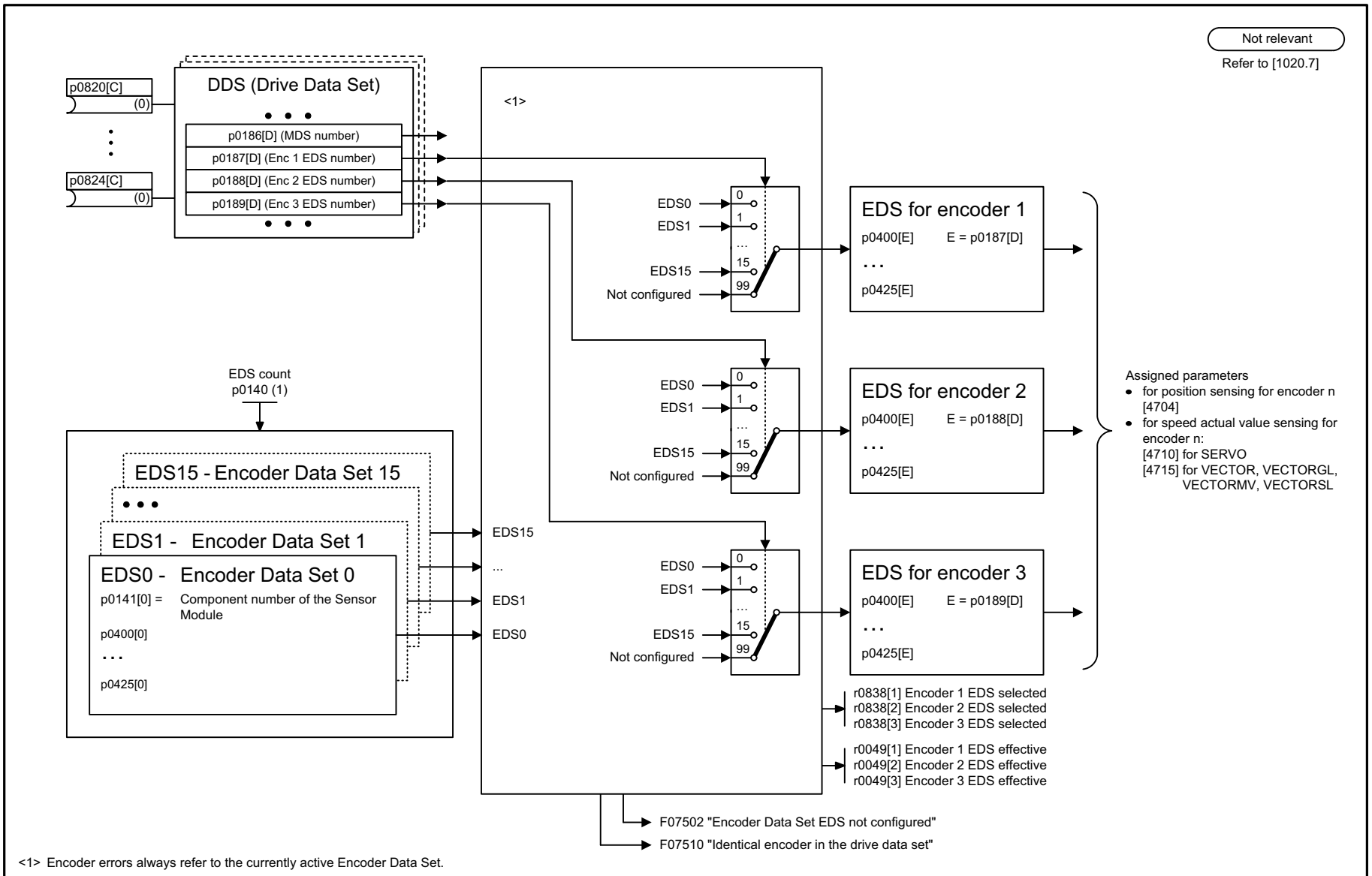

<1> Encoder errors always refer to the currently active Encoder Data Set.

1	2	3	4	5	6	7	8
DO: SERVO, VECTOR, VECTORGL, VECTORMV, VECTORSL					fp_8570_51_eng.vsd	Function diagram	- 8570 -
Data sets - Encoder Data Sets (EDS)					27.10.09 V04.05.00	SINAMICS	

Fig. 2-162 8570 – Encoder Data Sets (EDS)

© Siemens AG 2012 All Rights Reserved

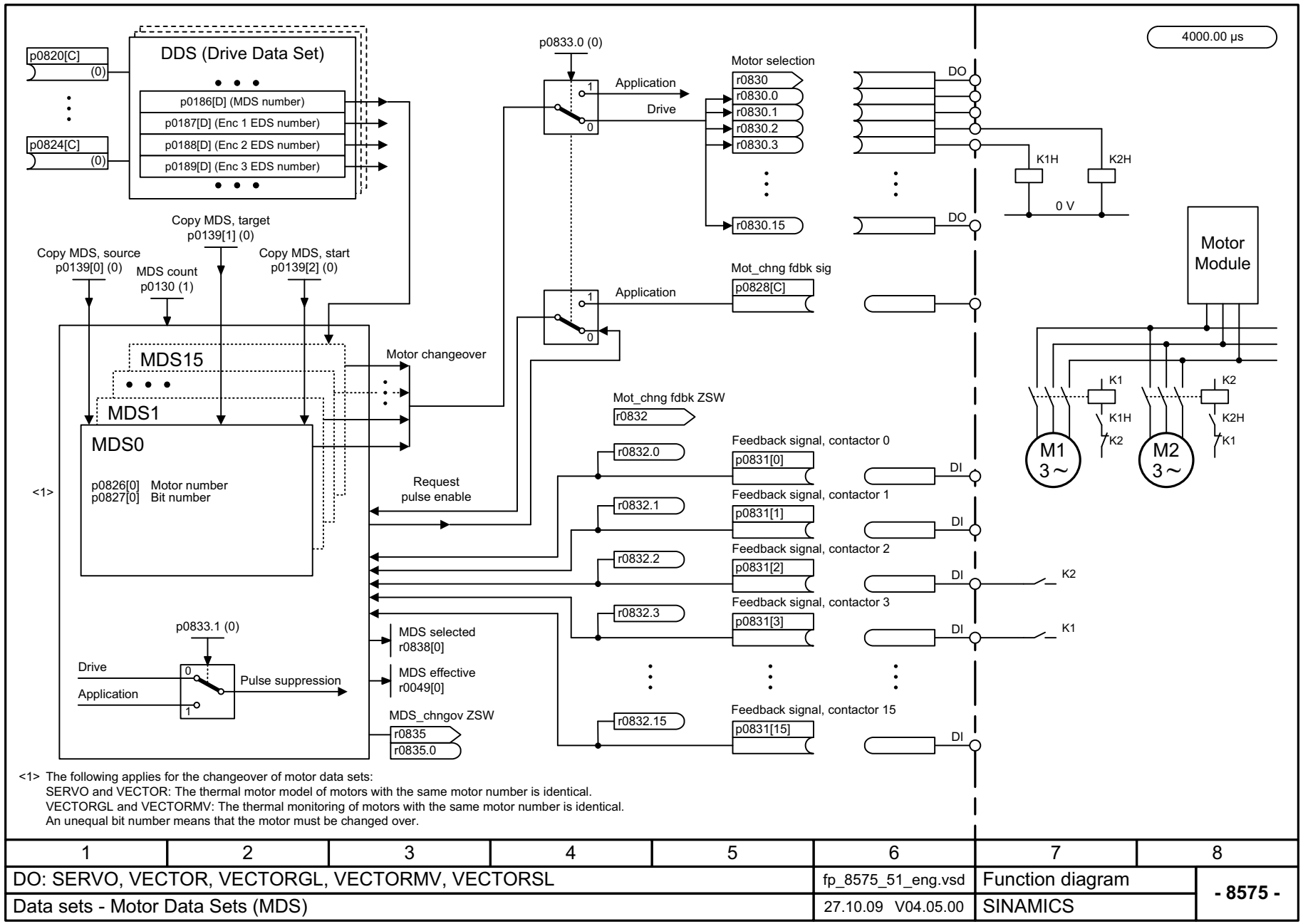

<1> The following applies for the changeover of motor data sets:
SERVO and VECTOR: The thermal motor model of motors with the same motor number is identical.
VECTORGL and VECTORMV: The thermal monitoring of motors with the same motor number is identical.
An unequal bit number means that the motor must be changed over.

1	2	3	4	5	6	7	8
DO: SERVO, VECTOR, VECTORGL, VECTORMV, VECTORSL					fp_8575_51_eng.vsd	Function diagram	- 8575 -
Data sets - Motor Data Sets (MDS)					27.10.09 V04.05.00	SINAMICS	

Fig. 2-163 8575 – Motor Data Sets (MDS)

© Siemens AG 2012 All Rights Reserved

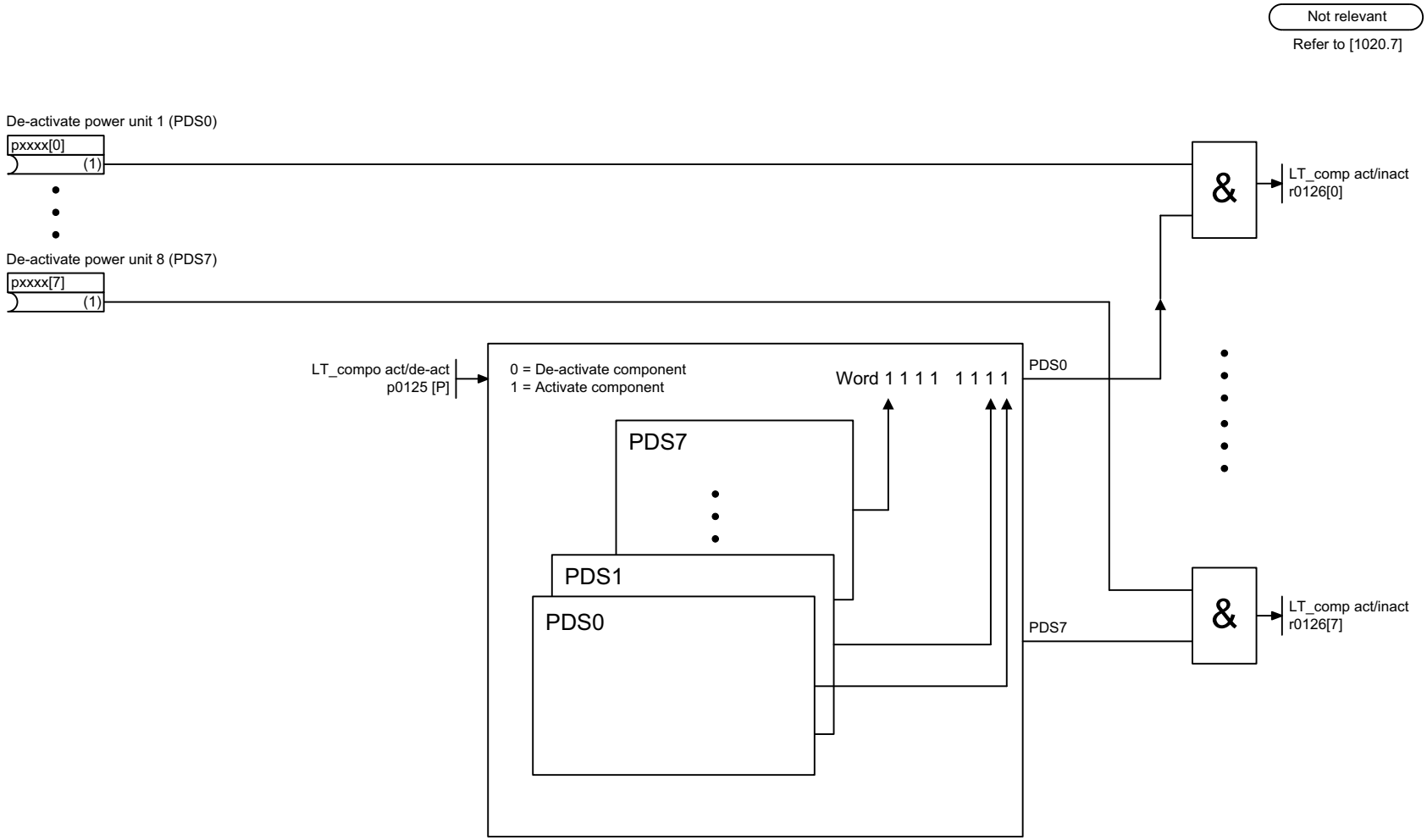

1	2	3	4	5	6	7	8
DO: SERVO, VECTOR					fp_8580_54_eng.vsd	Function diagram	- 8580 -
Data sets - Power unit Data Sets (PDS)					28.07.09 V04.05.00	S120/S150/G130/G150	

Fig. 2-164 8580 – Power unit Data Sets (PDS)

© Siemens AG 2012 All Rights Reserved

2.20 Basic Infeed

Function diagrams

8720 – Control word, sequence control infeed	2-1164
8726 – Status word, sequence control infeed	2-1165
8732 – Sequencer	2-1166
8734 – Missing enable signals, line contactor control	2-1167
8750 – Interface to the Basic Infeed power unit (control signals, actual values)	2-1168
8760 – Signals and monitoring functions (p3400.0 = 0)	2-1169

© Siemens AG 2012 All Rights Reserved

Fig. 2-165 8720 – Control word, sequence control infeed

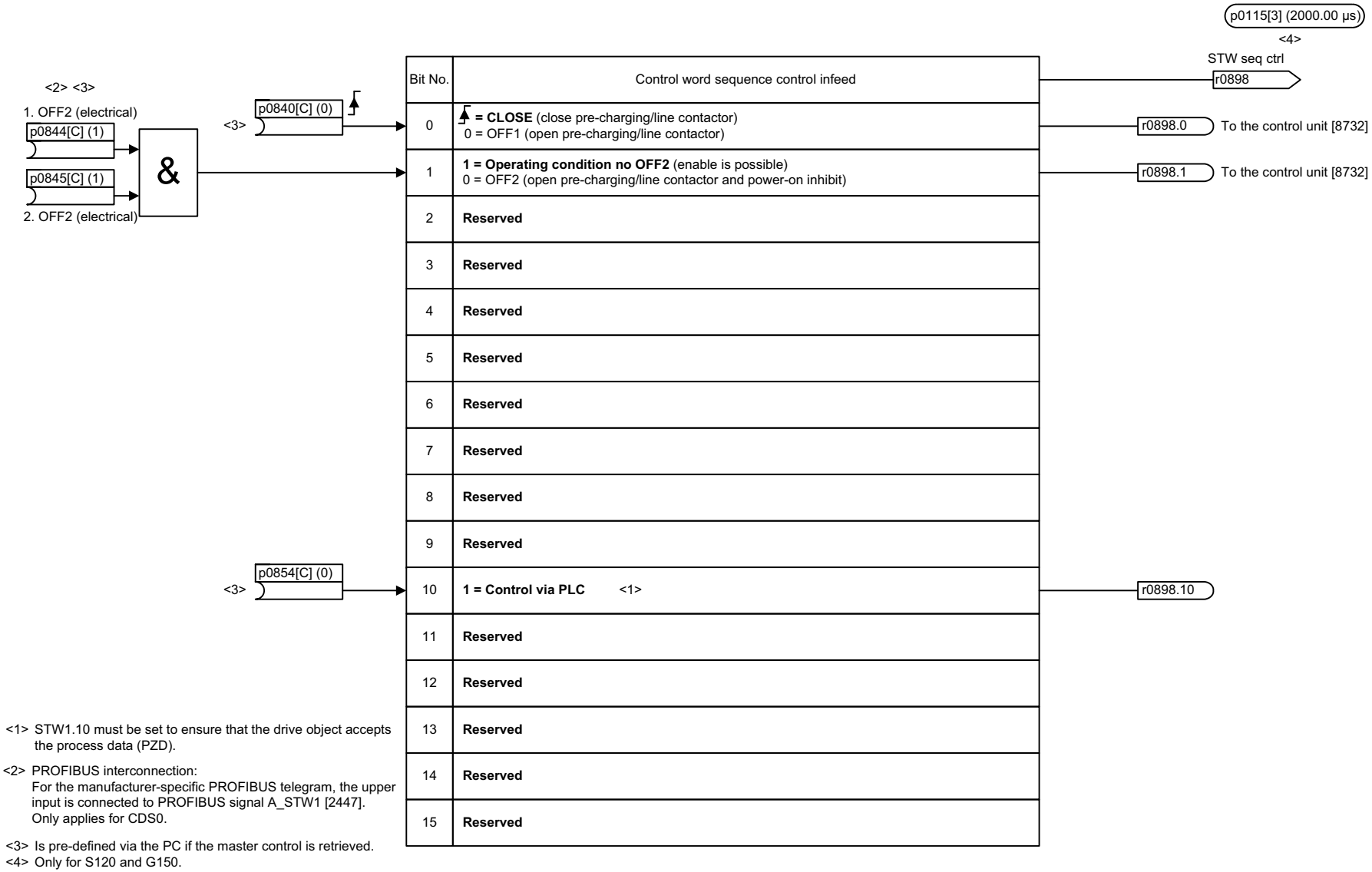

<1> STW1.10 must be set to ensure that the drive object accepts the process data (PZD).

<2> PROFIBUS interconnection:
For the manufacturer-specific PROFIBUS telegram, the upper input is connected to PROFIBUS signal A_STW1 [2447].
Only applies for CDS0.

<3> Is pre-defined via the PC if the master control is retrieved.

<4> Only for S120 and G150.

1	2	3	4	5	6	7	8
DO: B_INF					fp_8720_54_eng.vsd	Function diagram	- 8720 -
Basic Infeed - Control word, sequence control infeed					21.10.10 V04.05.00	S120/S150/G130/G150	

© Siemens AG 2012 All Rights Reserved

p0115[3] (2000.00 µs)
<2>
ZSW sequence ctrl
r0899

	Bit No.	Status word sequence control infeed	
[8732] From sequence control	0	**1 = Ready for switching on**	r0899.0
[8732] From sequence control	1	**1 = Ready for operation**	r0899.1
[8732] From sequence control	2	**1 = Operation enabled**	r0899.2
	3	**Reserved**	
[8732] From sequence control	4	**1 = No OFF2 active**	r0899.4
	5	**Reserved**	
[8732] From sequence control	6	**1 = Switching on inhibited**	r0899.6
	7	**Reserved**	
	8	**Reserved**	
Bit 9 = 1 --> Ready to exchange process data	9	**1 = Control requested** <1>	r0899.9
	10	**Reserved**	
[8750] From power unit	11	**1 = Pre-charging completed**	r0899.11 [8760.5]
[8734.4] From line contactor control	12	**1 = Line contactor closed**	r0899.12
	13	**Reserved**	
	14	**Reserved**	
	15	**Reserved**	

<1> The drive object is ready to accept data.
<2> Only for S120 and G150.

1	2	3	4	5	6	7	8
DO: B_INF					fp_8726_54_eng.vsd	Function diagram	- 8726 -
Basic Infeed - Status word, sequence control infeed					21.10.10 V04.05.00	S120/S150/G130/G150	

Fig. 2-166 8726 – Status word, sequence control infeed

© Siemens AG 2012 All Rights Reserved

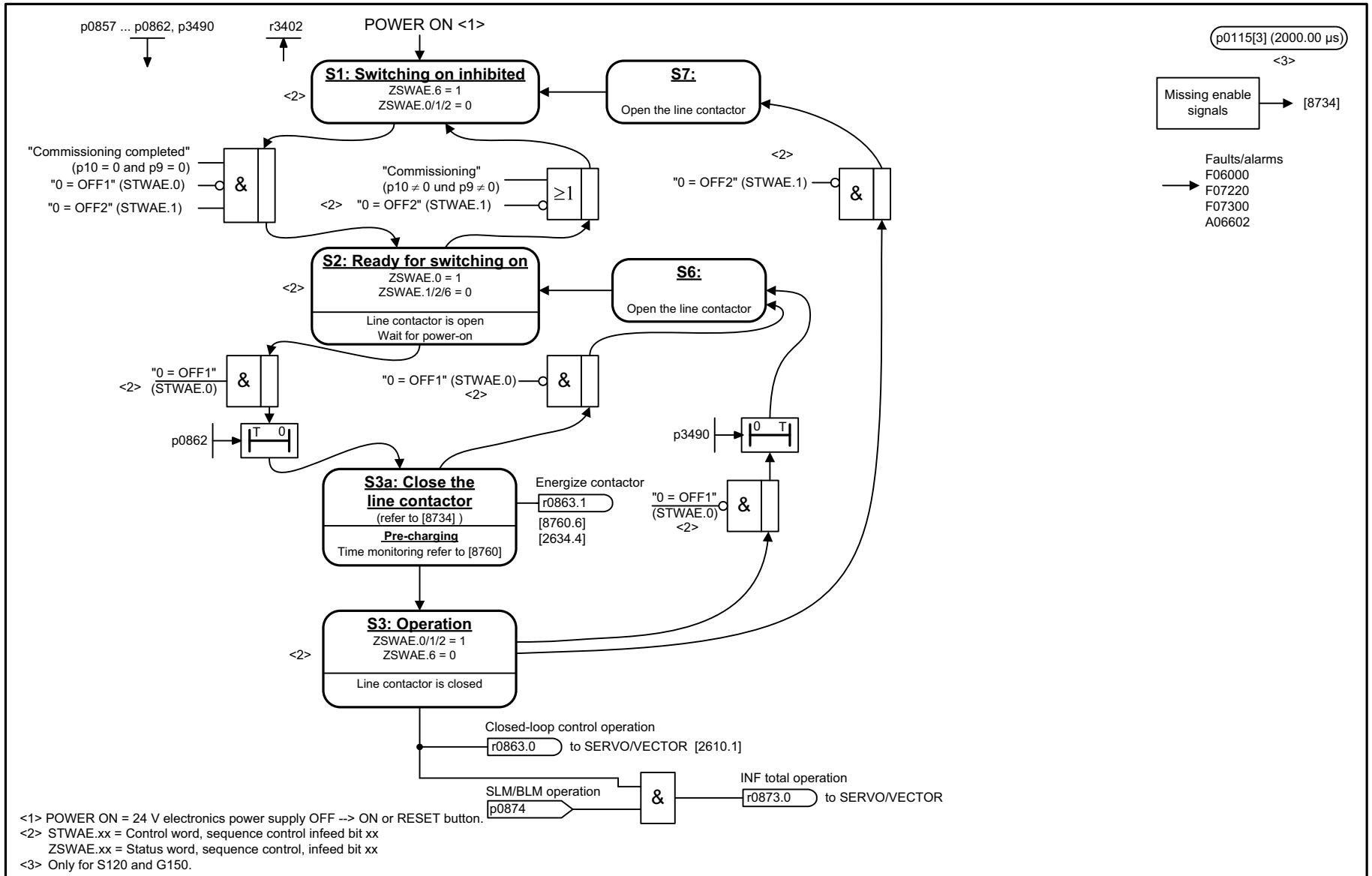

1	2	3	4	5	6	7	8
DO: B_INF					fp_8732_54_eng.vsd	Function diagram	- 8732 -
Basic Infeed - Sequence control					25.10.11 V04.05.00	S120/S150/G130/G150	

Fig. 2-167 8732 – Sequencer

© Siemens AG 2012 All Rights Reserved

Missing enable signals

Missing enable signals that prevent the drive going into operation
(this situation can be detected at the ZSW sequence control, infeed r0899.2 = 1 [8726]).

Bit No.	Meaning	
0	**1 = OFF1, enable missing** (p0840 = 0 or switching on inhibited is present)	r0046.0 [3020.5]
1	**1 = OFF2, enable missing** (p0844 = 0 or p0845 = 0)	r0046.1
2		
3	**1 = Operation enable missing** (r0898.3 = 0 [8720])	
5		
6		
8	**1 = EP terminals, enable missing** (pulse enable EP terminals missing)	r0046.8
9		
16	**1 = OFF1 internal enable missing** (OFF1 fault response is present)	r0046.16
17	**1 = OFF2 enable internal missing** (commissioning selected p0009 > 0 or p0010 > 0 or OFF2 fault response present)	r0046.17
26	**1 = Infeed inactive or not operational**	r0046.26
29	**1 = Cooling unit ready signal missing**	r0046.29

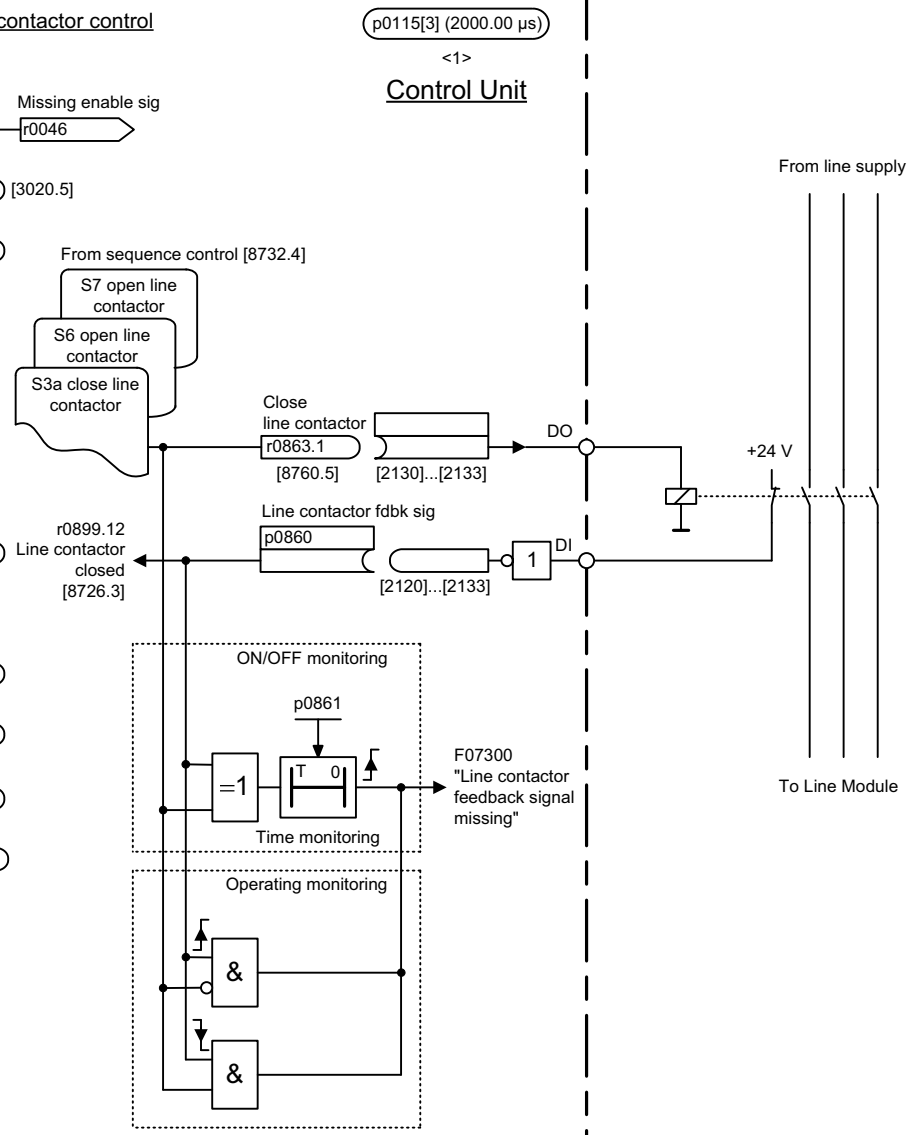

<1> Only for S120 and G150.

1	2	3	4	5	6	7	8
DO: B_INF					fp_8734_54_eng.vsd	Function diagram	- 8734 -
Basic Infeed - Missing enable signals, line contactor control					25.10.11 V04.05.00	S120/S150/G130/G150	

Fig. 2-168 8734 – Missing enable signals, line contactor control

© Siemens AG 2012 All Rights Reserved

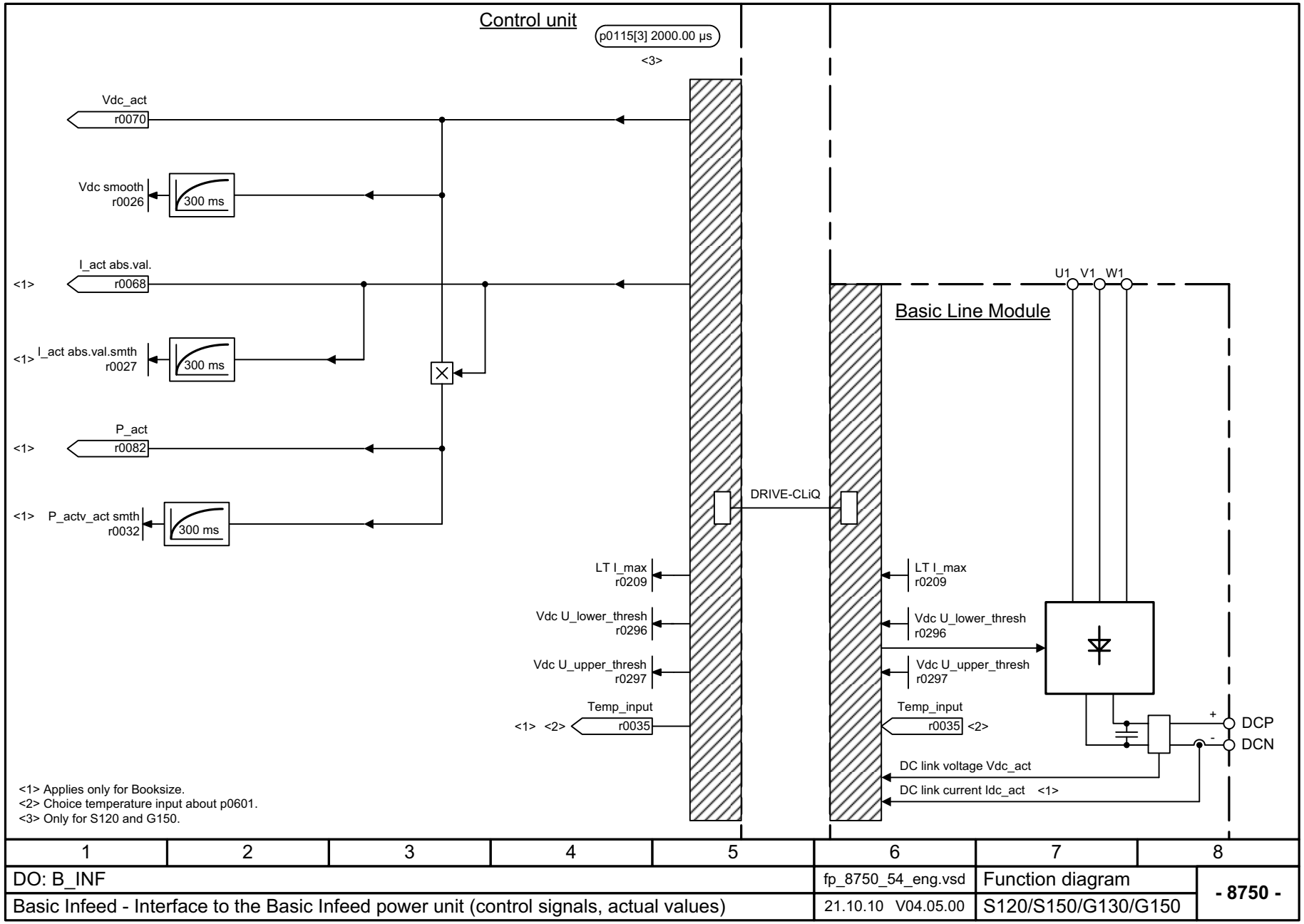

1	2	3	4	5	6	7	8
DO: B_INF					fp_8750_54_eng.vsd	Function diagram	- 8750 -
Basic Infeed - Interface to the Basic Infeed power unit (control signals, actual values)					21.10.10 V04.05.00	S120/S150/G130/G150	

Fig. 2-169 8750 – Interface to the Basic Infeed power unit (control signals, actual values)

© Siemens AG 2012 All Rights Reserved

Fig. 2-170 8760 – Signals and monitoring functions (p3400.0 = 0)

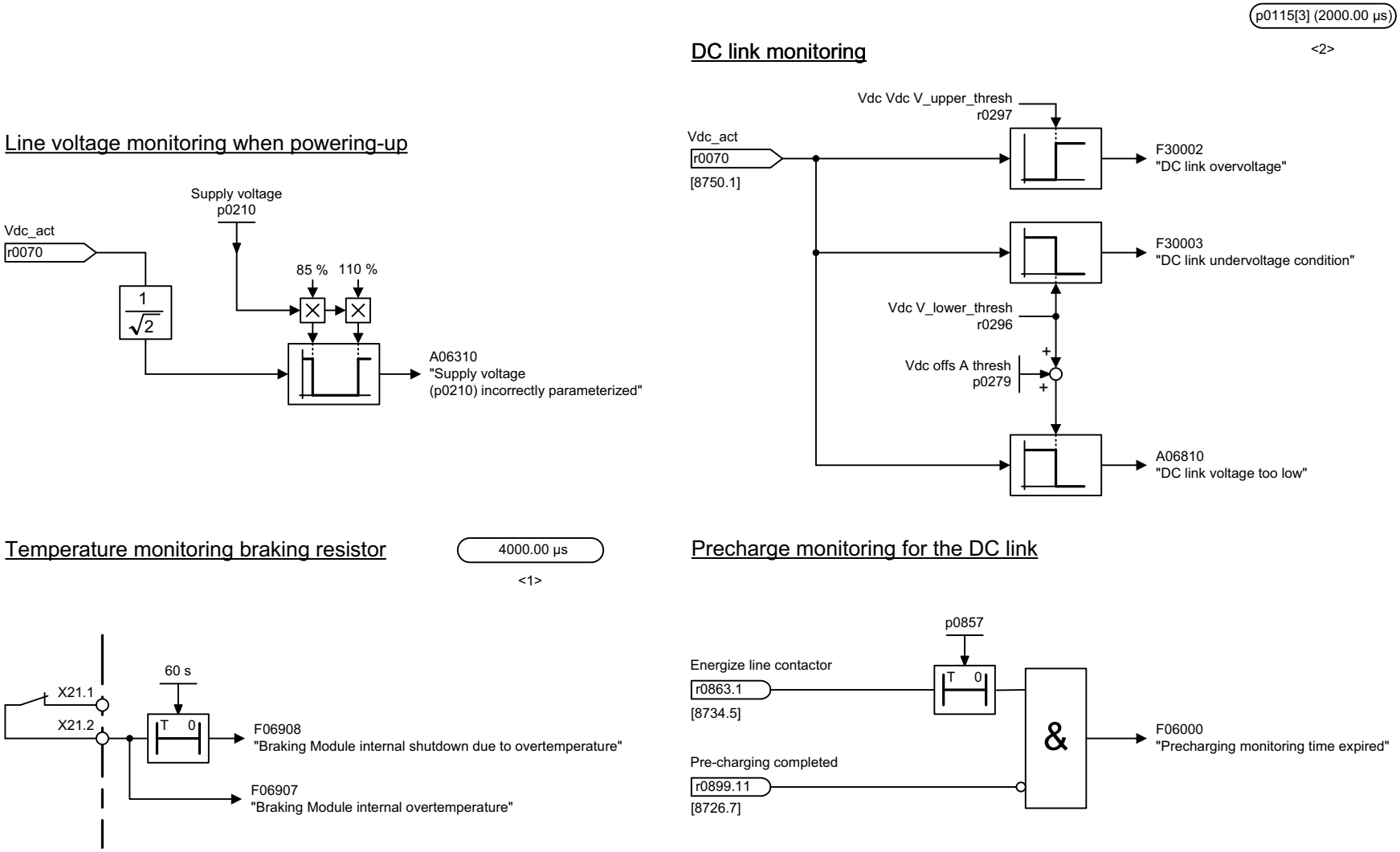

<1> For B_INF with Braking Module internal only.
<2> Only für S120 and G150.

1	2	3	4	5	6	7	8
DO: B_INF					fp_8760_54_eng.vsd	Function diagram	- 8760 -
Basic Infeed - Signals and monitoring functions (p3400.0 = 0)					21.10.10 V04.05.00	S120/S150/G130/G150	

© Siemens AG 2012 All Rights Reserved

2.21 Terminal Board 30 (TB30)

Function diagrams

9100 – Digital inputs, electrically isolated (DI 0 ... DI 3)	2-1171
9102 – Digital outputs, electrically isolated (DO 0 ... DO 3)	2-1172
9104 – Analog inputs (AI 0 ... AI 1)	2-1173
9106 – Analog outputs (AO 0 ... AO 1)	2-1174

© Siemens AG 2012 All Rights Reserved

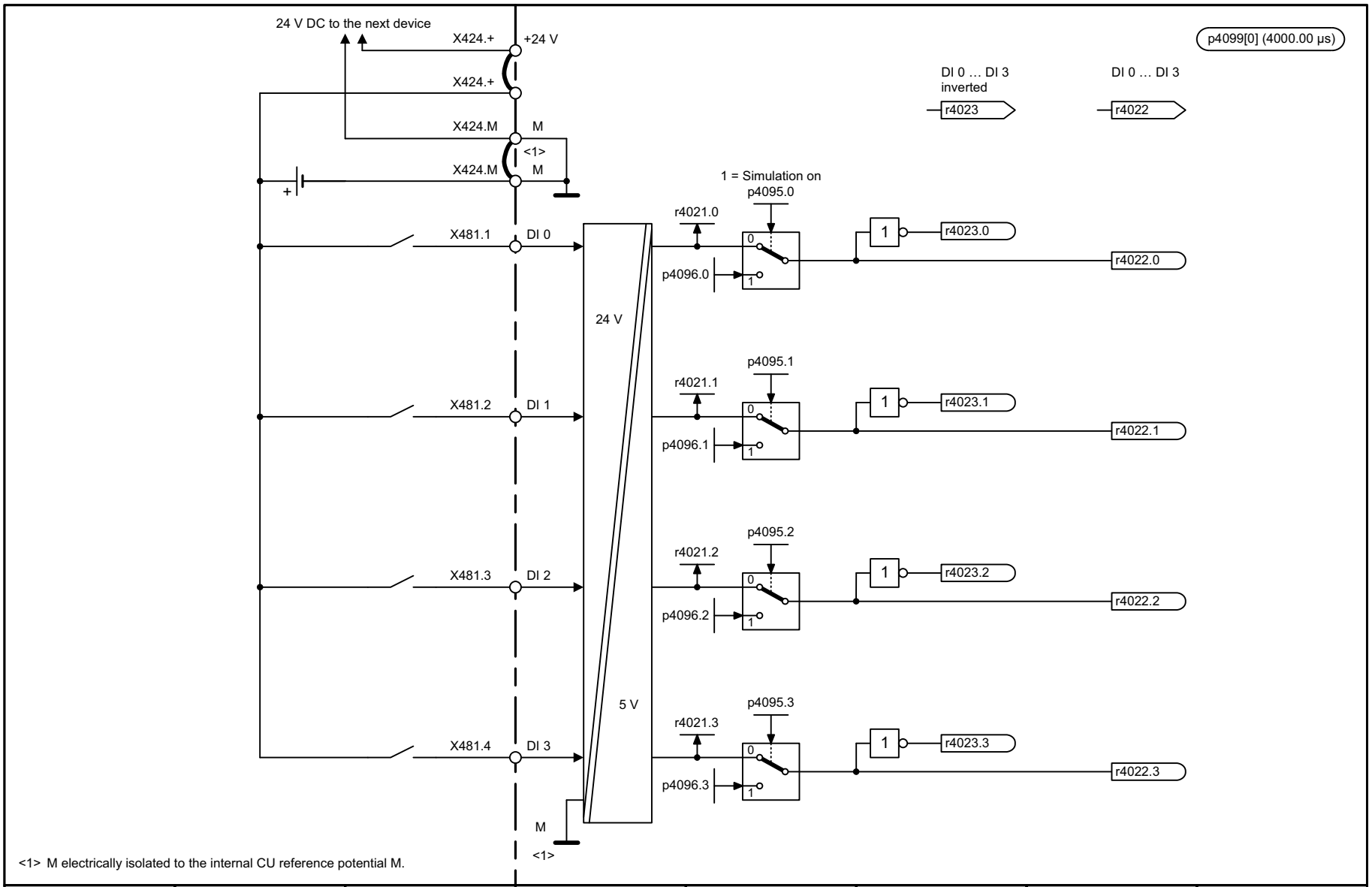

1	2	3	4	5	6	7	8
DO: TB30					fp_9100_51_eng.vsd	Function diagram	- 9100 -
Terminal Board 30 (TB30) - Digital inputs, electrically isolated (DI 0 ... DI 3)					24.11.09 V04.05.00	SINAMICS	

Fig. 2-171 9100 – Digital inputs, electrically isolated (DI 0 ... DI 3)

© Siemens AG 2012 All Rights Reserved

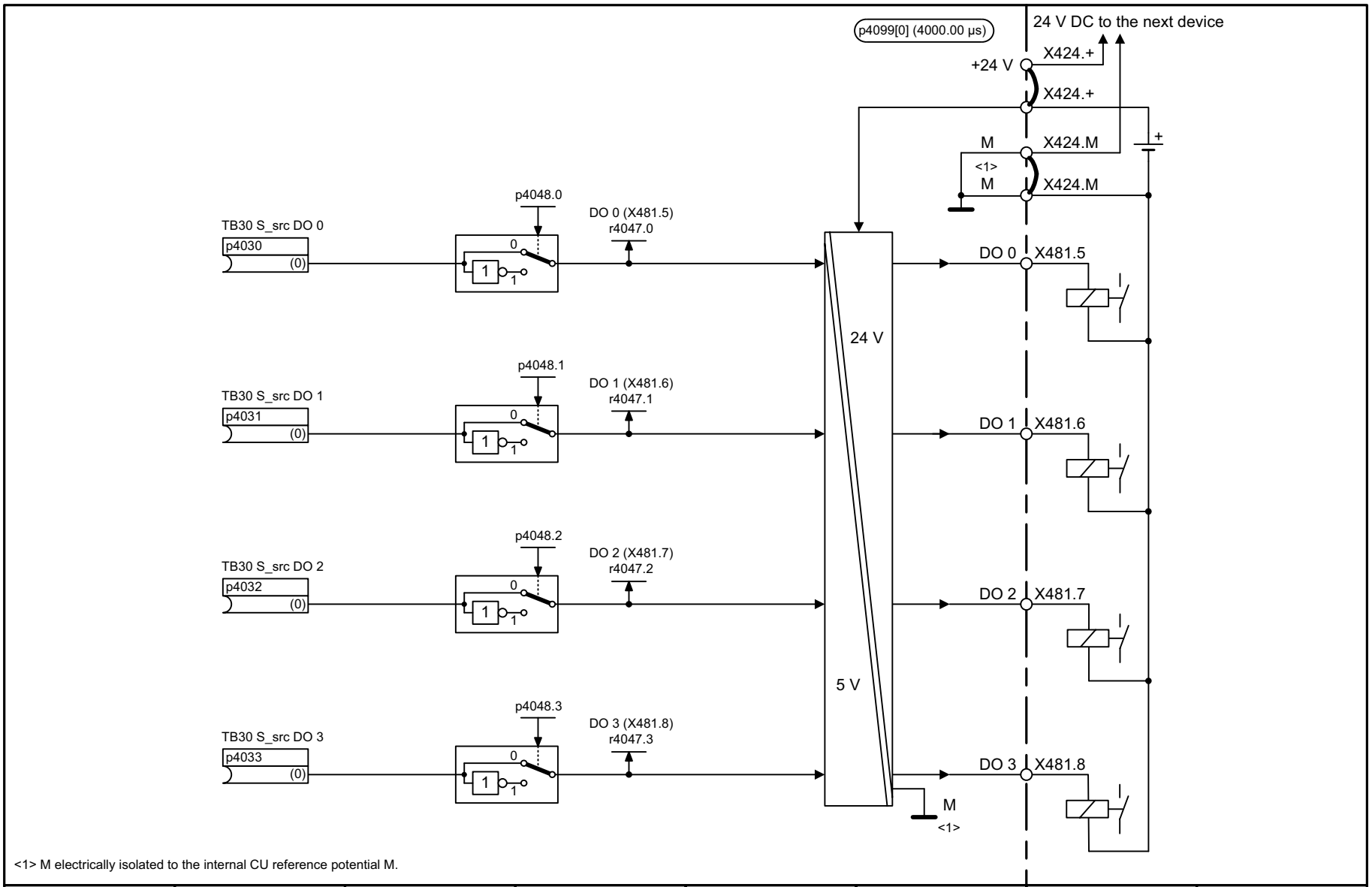

<1> M electrically isolated to the internal CU reference potential M.

1	2	3	4	5	6	7	8
DO: TB30					fp_9102_51_eng.vsd	Function diagram	- 9102 -
Terminal Board 30 (TB30) - Digital outputs, electrically isolated (DO 0 ... DO 3)					24.11.09 V04.05.00	SINAMICS	

Fig. 2-172 9102 – Digital outputs, electrically isolated (DO 0 ... DO 3)

© Siemens AG 2012 All Rights Reserved

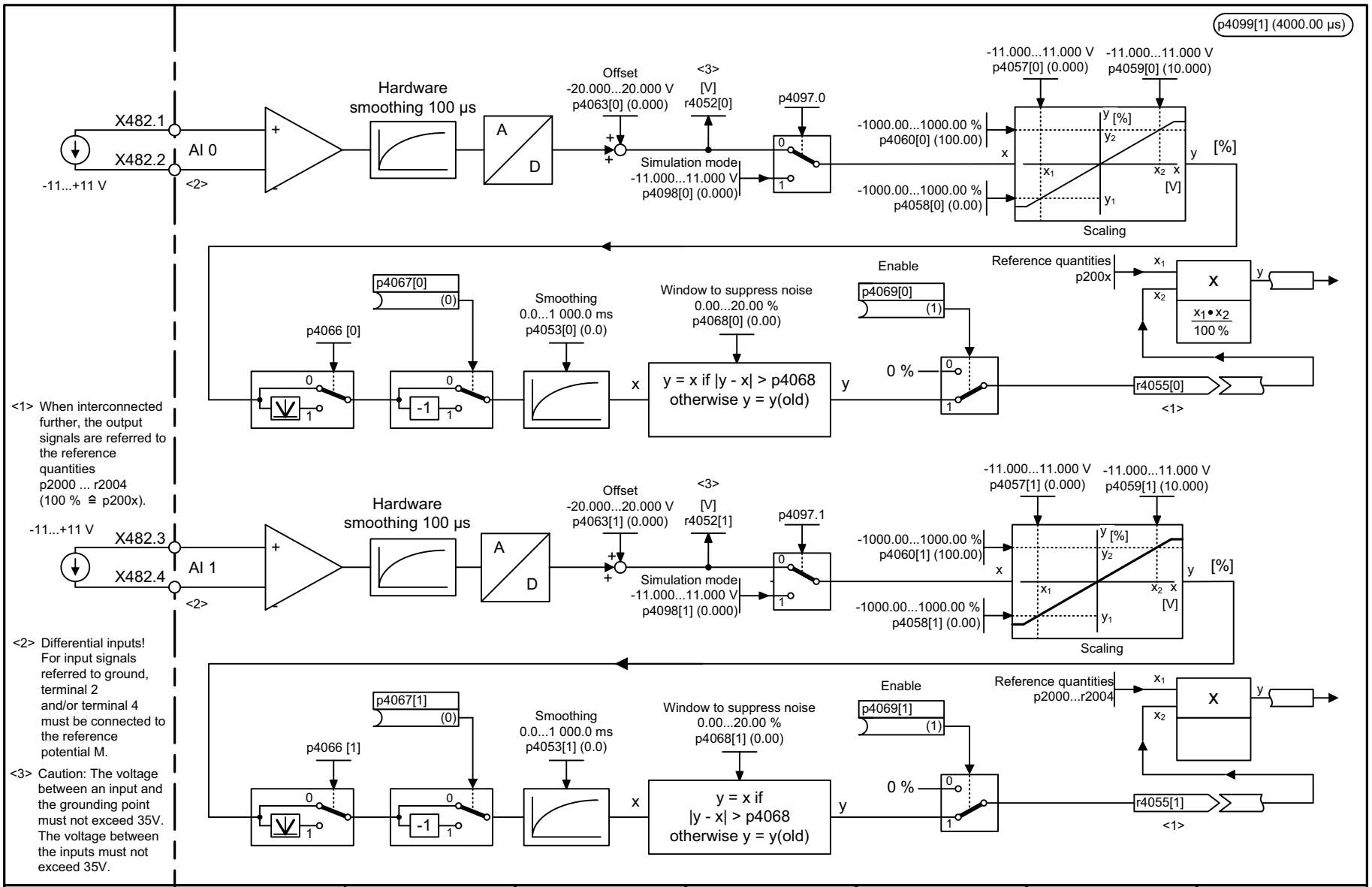

1	2	3	4	5	6	7	8
DO: TB30					fp_9104_51_eng.vsd	Function diagram	- 9104 -
Terminal Board 30 (TB30) - Analog inputs (AI 0 ... AI 1)					21.06.05 V04.05.00	SINAMICS	

Fig. 2-173 9104 – Analog inputs (AI 0 ... AI 1)

© Siemens AG 2012 All Rights Reserved

Fig. 2-174 9106 – Analog outputs (AO 0 ... AO 1)

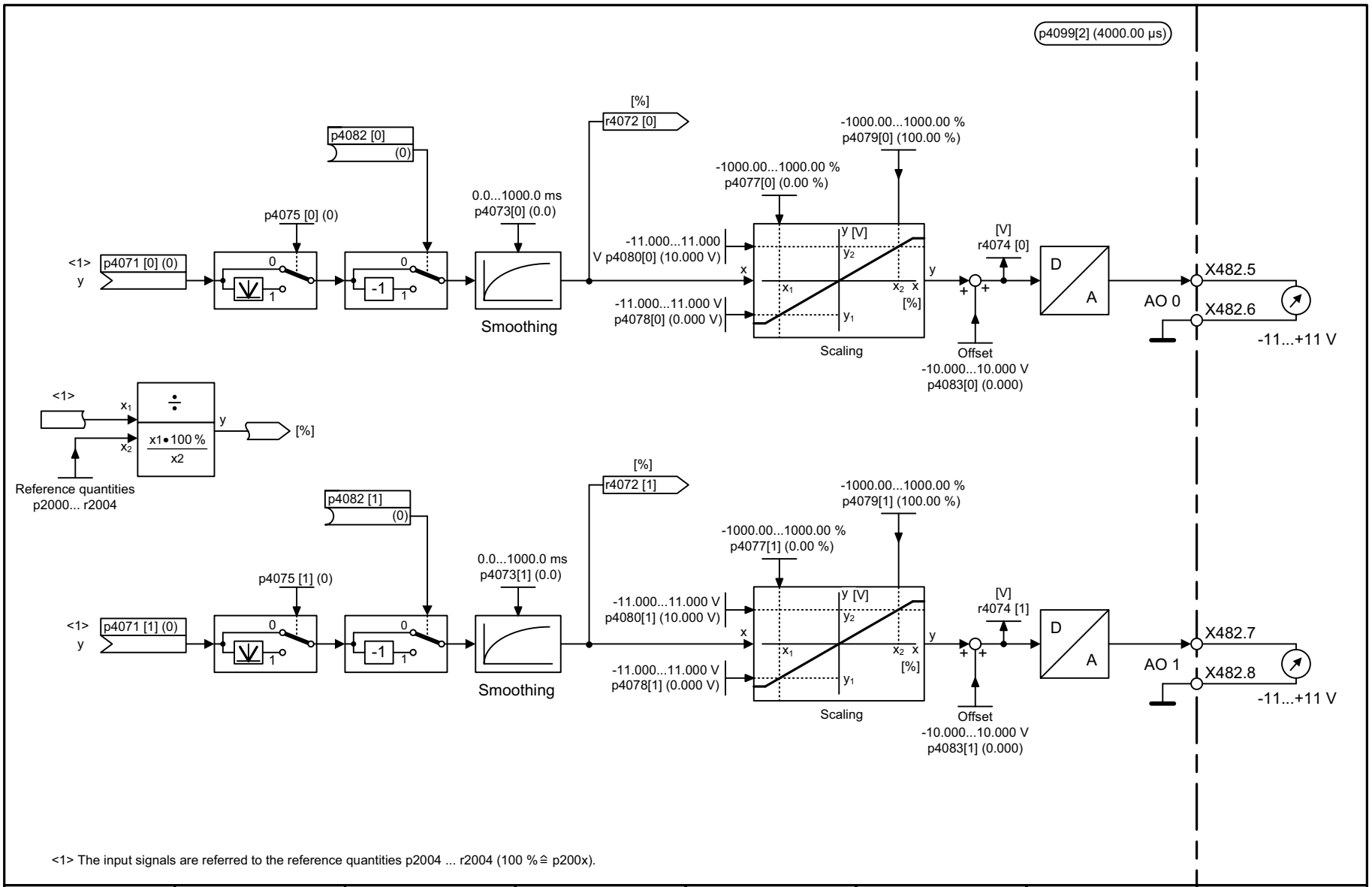

<1> The input signals are referred to the reference quantities p2004 ... r2004 (100 %≙ p200x).

1	2	3	4	5	6	7	8
DO: TB30					fp_9106_51_eng.vsd	Function diagram	- 9106 -
Terminal Board 30 (TB30) - Analog outputs (AO 0 ... AO 1)					25.10.05 V04.05.00	SINAMICS	

© Siemens AG 2012 All Rights Reserved

2.22 Communication Board CAN10 (CBC10)

Function diagrams

9204 – Receive telegram, free PDO mapping (p8744 = 2)	2-1176
9206 – Receive telegram, Predefined Connection Set (p8744 = 1)	2-1177
9208 – Send telegram, free PDO mapping (p8744 = 2)	2-1178
9210 – Send telegram, Predefined Connection Set (p8744 = 1)	2-1179
9220 – Control word, CANopen	2-1180
9226 – Status word, CANopen	2-1181

© Siemens AG 2012 All Rights Reserved

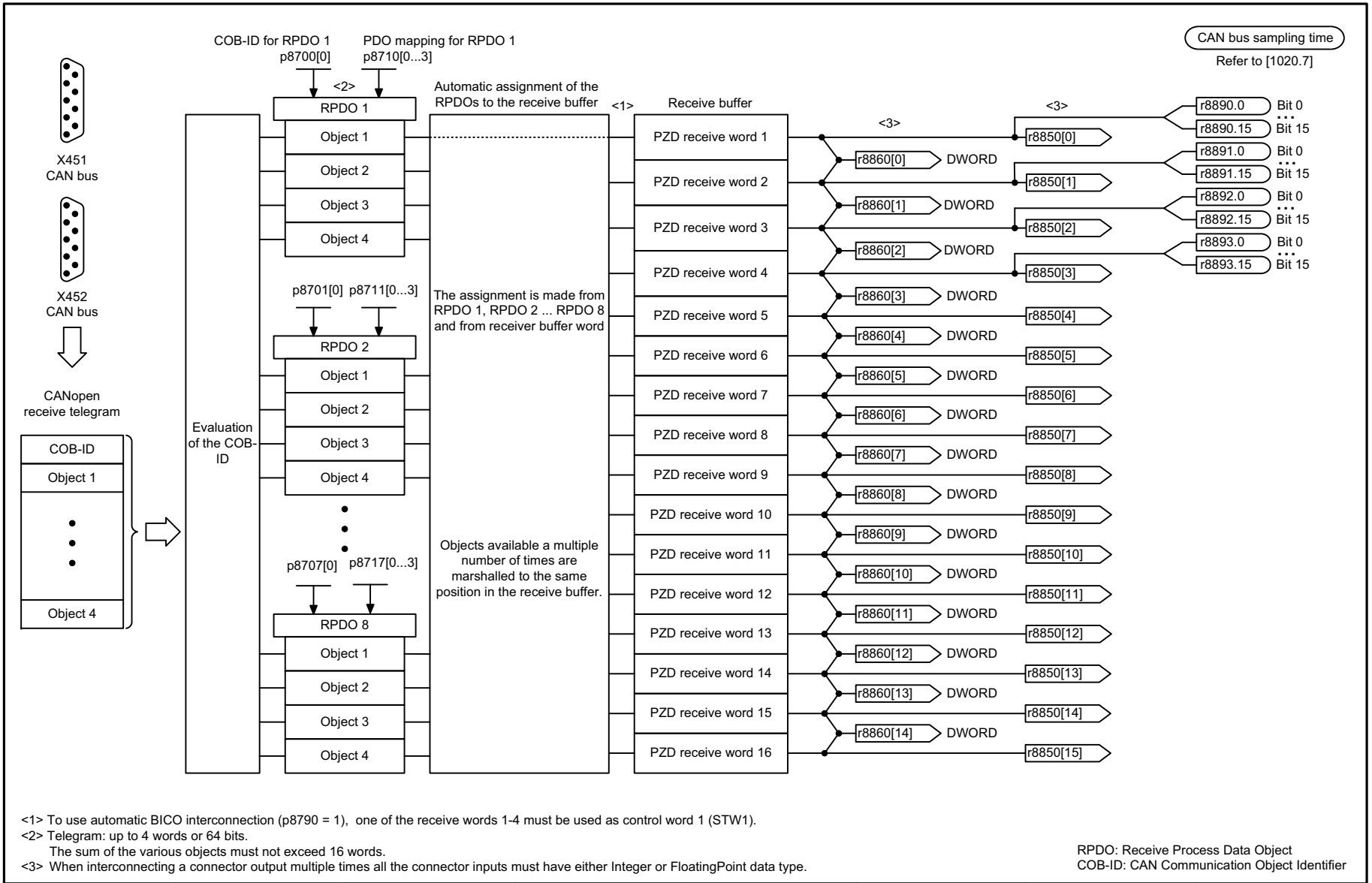

<1> To use automatic BICO interconnection (p8790 = 1), one of the receive words 1-4 must be used as control word 1 (STW1).
<2> Telegram: up to 4 words or 64 bits.
The sum of the various objects must not exceed 16 words.
<3> When interconnecting a connector output multiple times all the connector inputs must have either Integer or FloatingPoint data type.

RPDO: Receive Process Data Object
COB-ID: CAN Communication Object Identifier

1	2	3	4	5	6	7	8
DO: SERVO, VECTOR, VECTORGL, VECTORMV, VECTORSL					fp_9204_51_eng.vsd	Function diagram	- 9204 -
Communication Board CAN10 (CBC10) - Receive telegram, free PDO mapping (p8744 = 2)					27.05.10 V04.05.00	SINAMICS	

Fig. 2-175 9204 – Receive telegram, free PDO mapping (p8744 = 2)

© Siemens AG 2012 All Rights Reserved

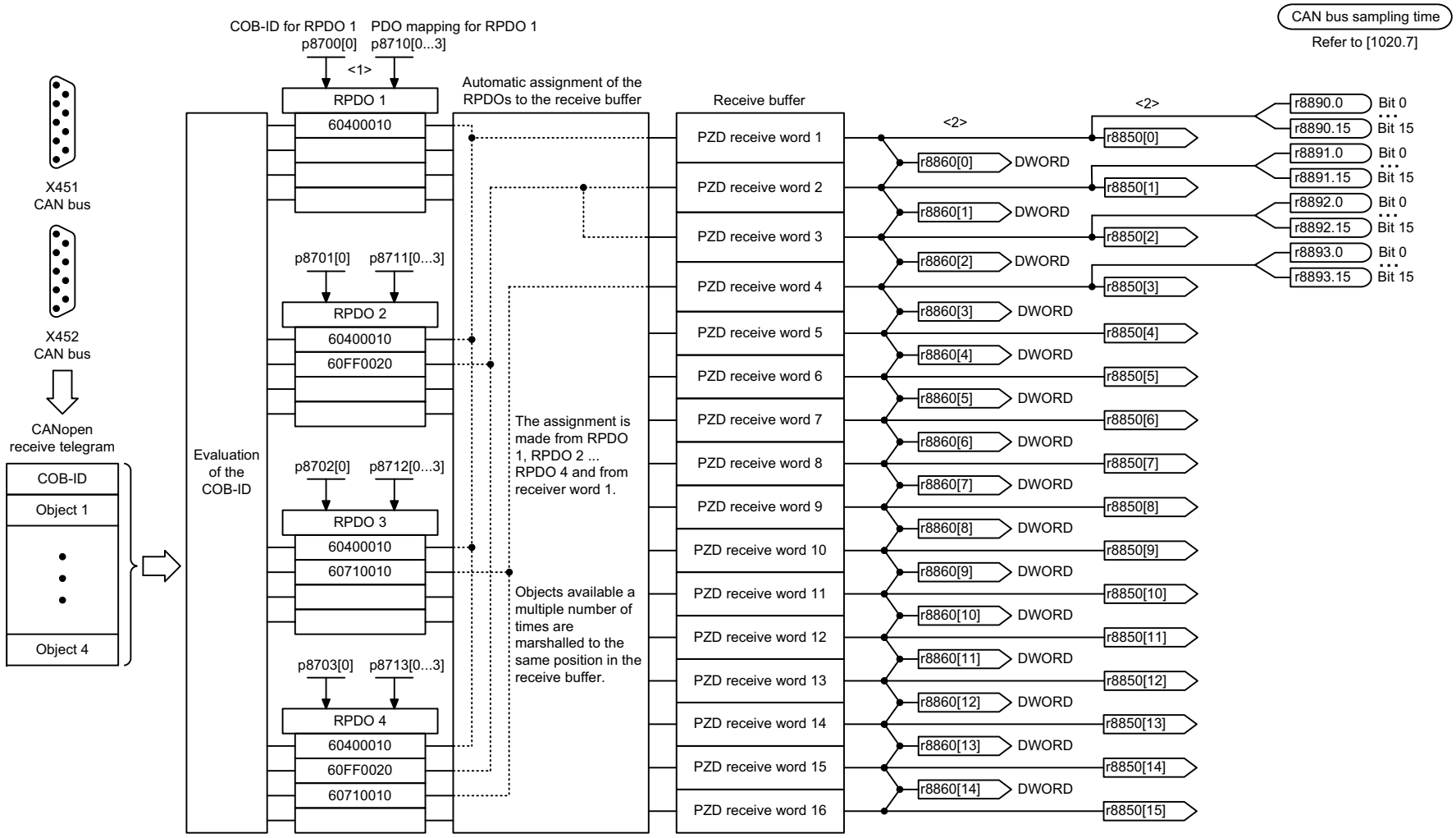

<1> Telegram: up to 4 words or 64 bits.
The sum of the various objects must not exceed 16 words.
<2> When interconnecting a connector output multiple times all the connector inputs must have either Integer or FloatingPoint data type.

RPDO: Receive Process Data Object
COB-ID: CAN Communication Object Identifier

1	2	3	4	5	6	7	8
DO: SERVO, VECTOR, VECTORGL, VECTORMV, VECTORSL					fp_9206_51_eng.vsd	Function diagram	- 9206 -
Communication Board CAN10 (CBC10) - Receive telegram, Predef. Conn. Set (p8744 = 1)					27.05.10 V04.05.00	SINAMICS	

Fig. 2-176 9206 – Receive telegram, Predefined Connection Set (p8744 = 1)

© Siemens AG 2012 All Rights Reserved

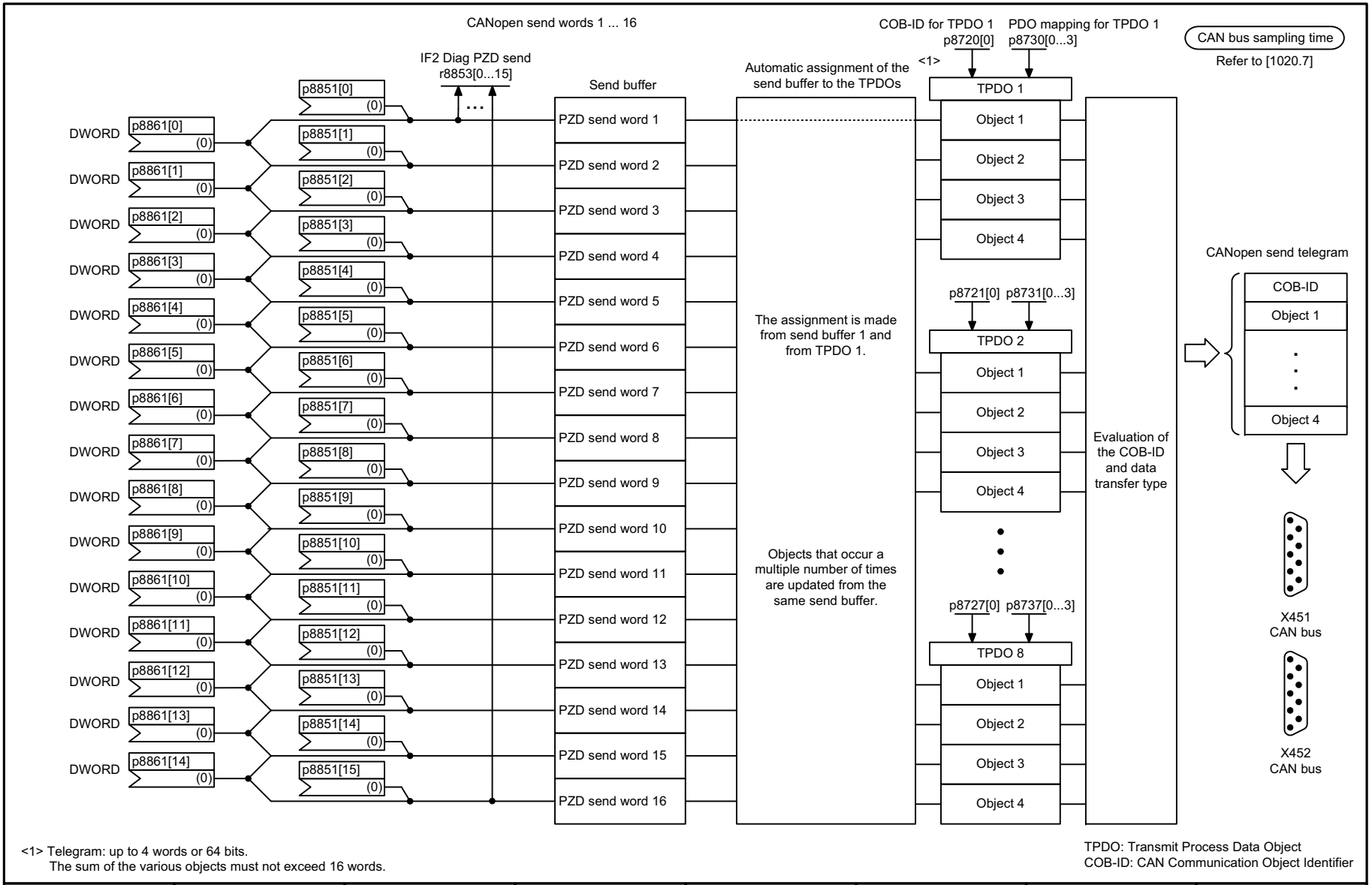

1	2	3	4	5	6	7	8
DO: SERVO, VECTOR, VECTORGL, VECTORMV, VECTORSL					fp_9208_51_eng.vsd	Function diagram	- 9208 -
Communication Board CAN10 (CBC10) - Send telegram, free PDO mapping (p8744 = 2)					23.10.09 V04.05.00	SINAMICS	

Fig. 2-177 9208 – Send telegram, free PDO mapping (p8744 = 2)

© Siemens AG 2012 All Rights Reserved

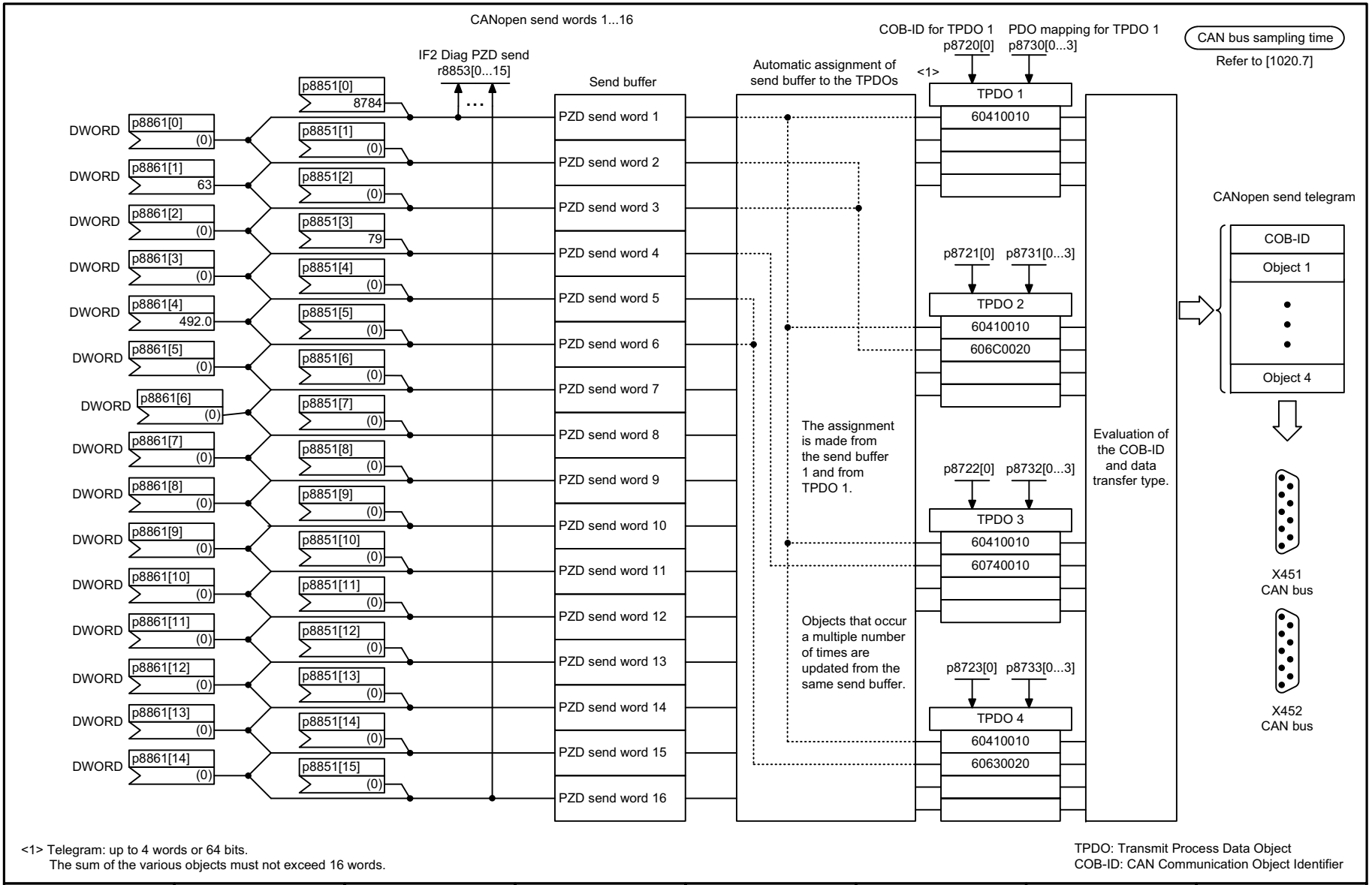

1	2	3	4	5	6	7	8
DO: SERVO, VECTOR, VECTORGL, VECTORMV. VECTORSL					fp_9210_51_eng.vsd	Function diagram	- 9210 -
Communication Board CAN10 (CBC10) - Send telegram, Predef. Connection Set (p8744 = 1)					23.10.09 V04.05.00	SINAMICS	

Fig. 2-178 9210 – Send telegram, Predefined Connection Set (p8744 = 1)

© Siemens AG 2012 All Rights Reserved

CAN bus sampling time
Refer to [1020.7]

Signal targets for control word CANopen

Signal	Meaning	Interconnection parameters <1>	[Function diagram] internal control word	[Function diagram] signal target	Inverted
STW1.0	↑ = ON (pulses can be enabled) **0 = OFF1** (braking with ramp-function generator, then pulse cancellation and ready-to-power-up)	p0840[0] = r8890.0	[2501.3]	[2610]	-
STW1.1	**1 = No coast-down activated** (enable possible) 0 = Activate coast-down (immediate pulse cancellation and power-on inhibit)	p0844[0] = r8890.1	[2501.3]	[2610]	-
STW1.2	**1 = No fast stop activated** (enable possible) 0 = Activate fast stop (braking along an OFF3 ramp p1135, then pulse cancellation and power-on inhibit)	p0848[0] = r8890.2	[2501.3]	[2610]	-
STW1.3	**1 = Enable operation** (pulses can be enabled) 0 = Inhibit operation (cancel pulses)	p0852[0] = r8890.3	[2501.3]	[2610]	-
STW1.4	**Reserved**	-	-	-	-
STW1.5	**Reserved**	-	-	-	-
STW1.6	**Reserved**	-	-	-	-
STW1.7	↑ **= Acknowledge fault**	p2103[0] = r8890.7	[2546.1]	[8060]	-
STW1.8	**Reserved**	-	-	-	-
STW1.9	**Reserved**	-	-	-	-
STW1.10	**Reserved**	-			-
STW1.11	**Can be freely connected**	pxxxx[y] = r8890.11			-
STW1.12	**Can be freely connected**	pxxxx[y] = r8890.12	-	-	-
STW1.13	**Can be freely connected**	pxxxx[y] = r8890.13	-	-	-
STW1.14	**Can be freely connected**	pxxxx[y] = r8890.14	-	-	-
STW1.15	**Can be freely connected**	pxxxx[y] = r8890.15	-	-	-

<1> Depending on the position of the CANopen control word in p8750, the number of the binector to be connected changes.

Fig. 2-179 9220 – Control word, CANopen

© Siemens AG 2012 All Rights Reserved

Fig. 2-180 9226 – Status word, CANopen

CAN bus sampling time
Refer to [1020.7]
Status word CANopen
r8784

	Bit No.	Status word CANopen
From sequence control [2610]	0	**1 = Ready to power-up**
From sequence control [2610]	1	**1 = Ready to operate** (DC link loaded, pulses blocked)
From sequence control [2610]	2	**1 = Operation enabled** (drive follows n_set)
From fault buffer [8060]	3	**1 = Fault present**
From sequence control [2610]	4	**1 = No coast down active**
From sequence control [2610]	5	**1 = No fast stop active**
From sequence control [2610]	6	**1 = Power-on inhibit active**
From alarm buffer [8065]	7	**1 = Alarm present**
p8785 (0)	8	**Freely interconnectable (BI: p8785)**
Bit 9 = 1 --> Ready to exchange process data	9	**1 = Control requested**
From speed signals [8011.8] (r2197.7)	10	**1 = Target reached <1>**
From status word speed controller [2522]	11	**1 = Torque limit reached**
From status word monitoring 3 [8010.8] (r2199.0)	12	**1 = Velocity equal to zero**
	13	**Reserved**
p8786 (0)	14	**Freely interconnectable (BI: p8786)**
p8787 (0)	15	**Freely interconnectable (BI: p8787)**

<1> With setpoint channel: connect p2151 with r1119 [8010.5].

1	2	3	4	5	6	7	8
DO: SERVO, VECTOR, VECTORGL, VECTORMV, VECTORSL					fp_9226_51_eng.vsd	Function diagram	- 9226 -
Communication Board CAN10 (CBC10) - Status word, CANopen					04.11.09 V04.05.00	SINAMICS	

© Siemens AG 2012 All Rights Reserved

2.23 Terminal Module 31 (TM31)

Function diagrams

9550 – Digital inputs, electrically isolated (DI 0 ... DI 3)	2-1183
9552 – Digital inputs, electrically isolated (DI 4 ... DI 7)	2-1184
9556 – Digital relay outputs, electrically isolated (DO 0 ... DO 1)	2-1185
9560 – Digital inputs/outputs, bidirectional (DI/DO 8 ... DI/DO 9)	2-1186
9562 – Digital inputs/outputs, bidirectional (DI/DO 10 ... DI/DO 11)	2-1187
9566 – Analog input 0 (AI 0)	2-1188
9568 – Analog input 1 (AI 1)	2-1189
9572 – Analog outputs (AO 0 ... AO 1)	2-1190
9576 – Temperature evaluation (KTY/PTC)	2-1191

© Siemens AG 2012 All Rights Reserved

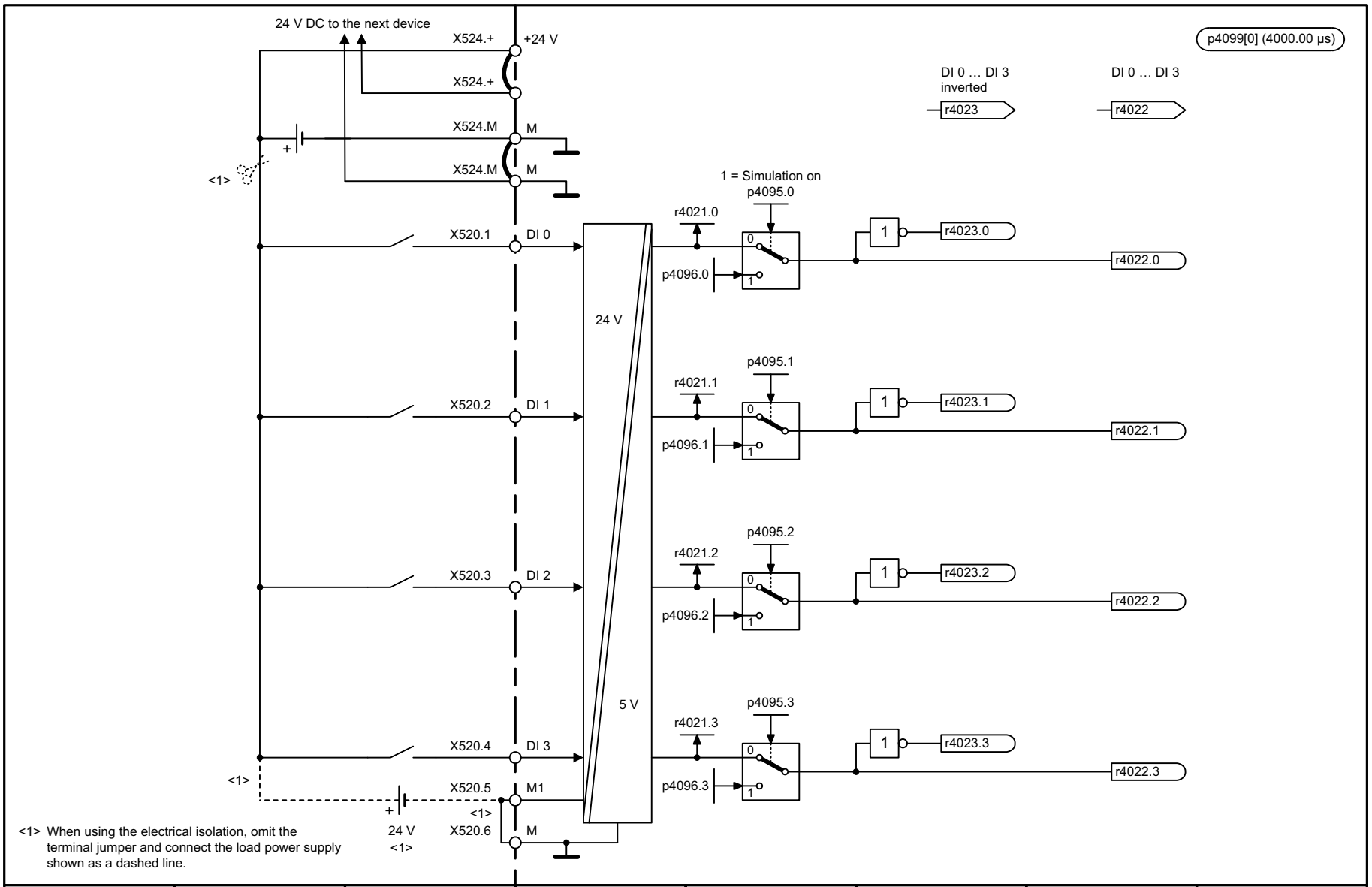

1	2	3	4	5	6	7	8
DO: TM31					fp_9550_51_eng.vsd	Function diagram	- 9550 -
Terminal Module 31 (TM31) - Digital inputs, electrically isolated (DI 0 ... DI 3)					25.03.09 V04.05.00	SINAMICS	

Fig. 2-181 9550 – Digital inputs, electrically isolated (DI 0 ... DI 3)

© Siemens AG 2012 All Rights Reserved

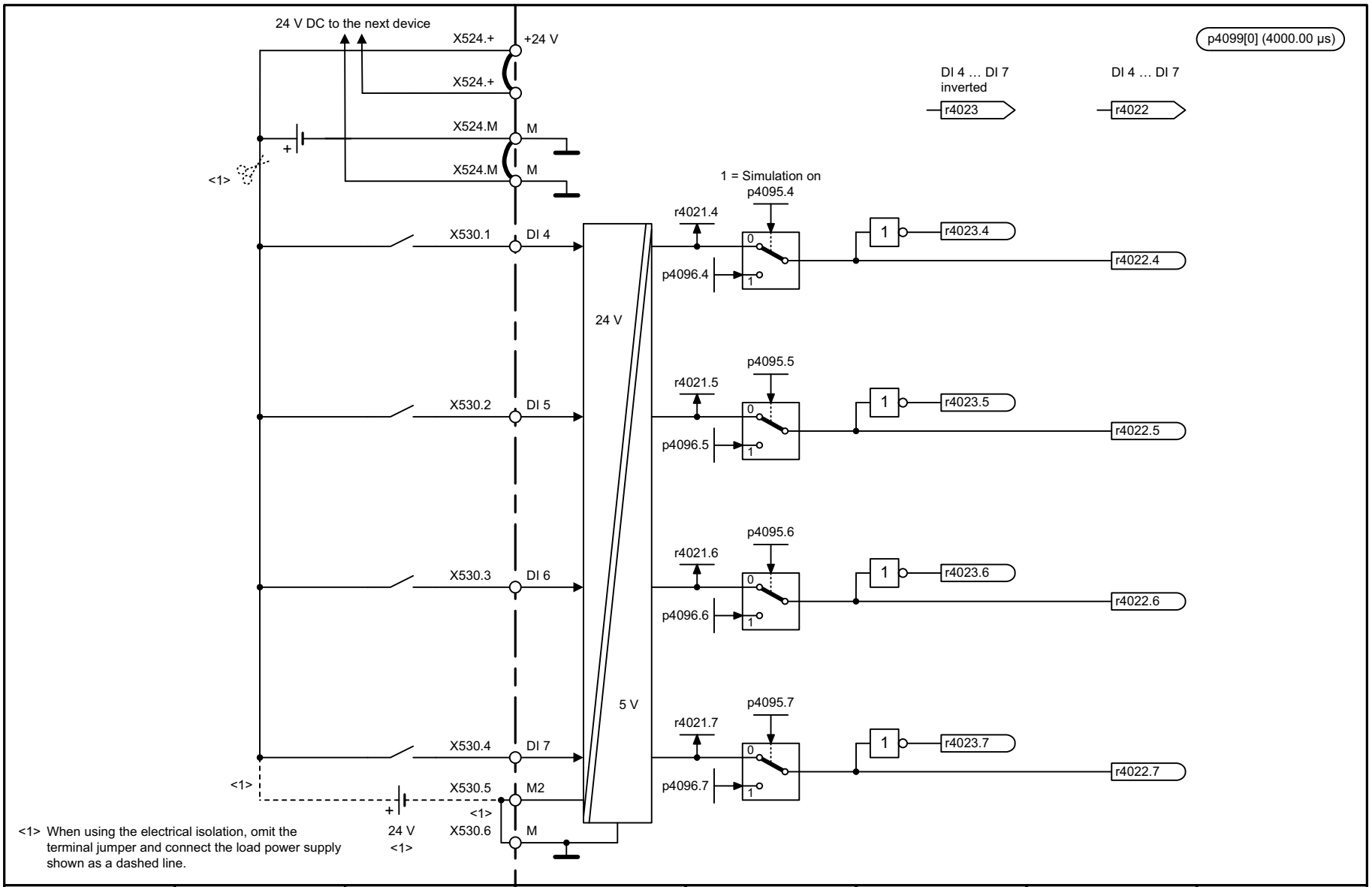

<1> When using the electrical isolation, omit the terminal jumper and connect the load power supply shown as a dashed line.

1	2	3	4	5	6	7	8
DO: TM31					fp_9552_51_eng.vsd	Function diagram	- 9552 -
Terminal Module 31 (TM31) - Digital inputs, electrically isolated (DI 4 ... DI 7)					25.03.09 V04.05.00	SINAMICS	

Fig. 2-182 9552 – Digital inputs, electrically isolated (DI 4 ... DI 7)

© Siemens AG 2012 All Rights Reserved

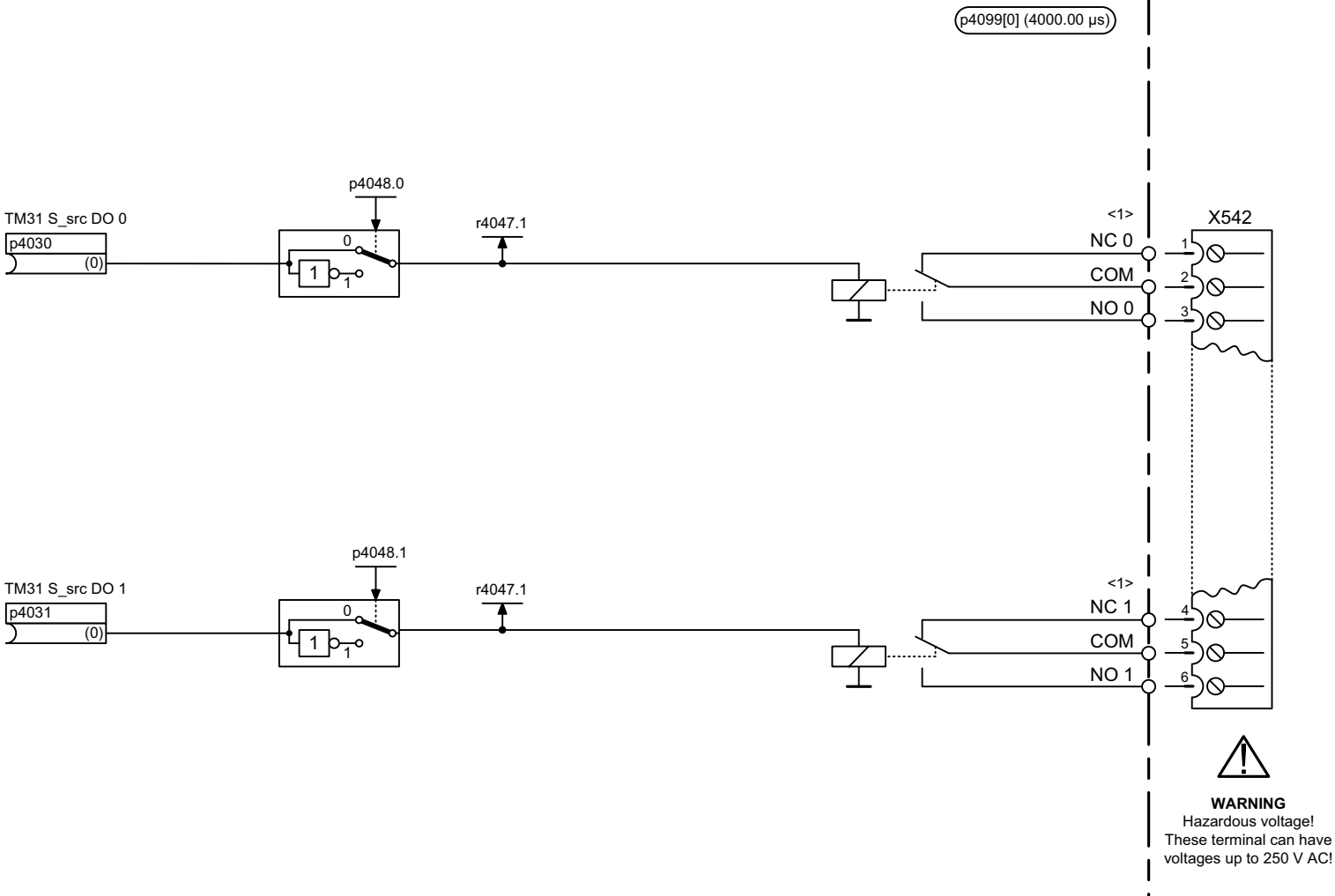

<1> NO: Normally Open contact ("open" in the quiescent state = NO contact)
NC: Normally Closed contact ("closed" in the quiescent state = NC contact)
The relay contacts have the following ratings - up to 100 V DC 240 W or 250 V AC 2000 VA.

1	2	3	4	5	6	7	8
DO: TM31					fp_9556_51_eng.vsd	Function diagram	- 9556 -
Terminal Module 31 (TM31) - Digital relay outputs, electrically isolated (DO 0 ... DO 1)					30.07.07 V04.05.00	SINAMICS	

Fig. 2-183 9556 – Digital relay outputs, electrically isolated (DO 0 ... DO 1)

© Siemens AG 2012 All Rights Reserved

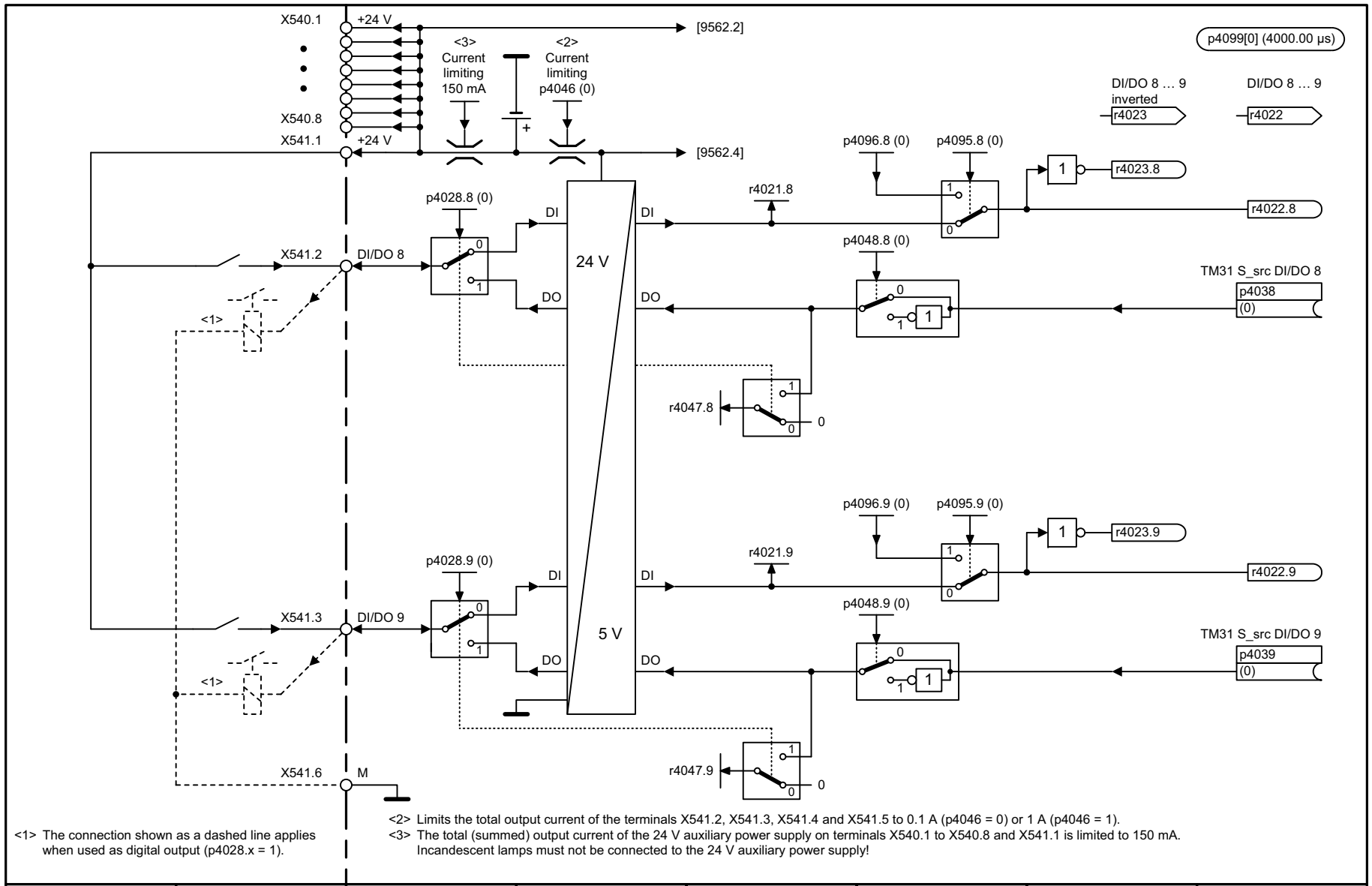

<1> The connection shown as a dashed line applies when used as digital output (p4028.x = 1).

<2> Limits the total output current of the terminals X541.2, X541.3, X541.4 and X541.5 to 0.1 A (p4046 = 0) or 1 A (p4046 = 1).

<3> The total (summed) output current of the 24 V auxiliary power supply on terminals X540.1 to X540.8 and X541.1 is limited to 150 mA. Incandescent lamps must not be connected to the 24 V auxiliary power supply!

1	2	3	4	5	6	7	8
DO: TM31					fp_9560_51_eng.vsd	Function diagram	- 9560 -
Terminal Module 31 (TM31) - Digital inputs/outputs, bidirectional (DI/DO 8 ... DI/DO 9)					27.03.09 V04.05.00	SINAMICS	

Fig. 2-184 9560 – Digital inputs/outputs, bidirectional (DI/DO 8 ... DI/DO 9)

© Siemens AG 2012 All Rights Reserved

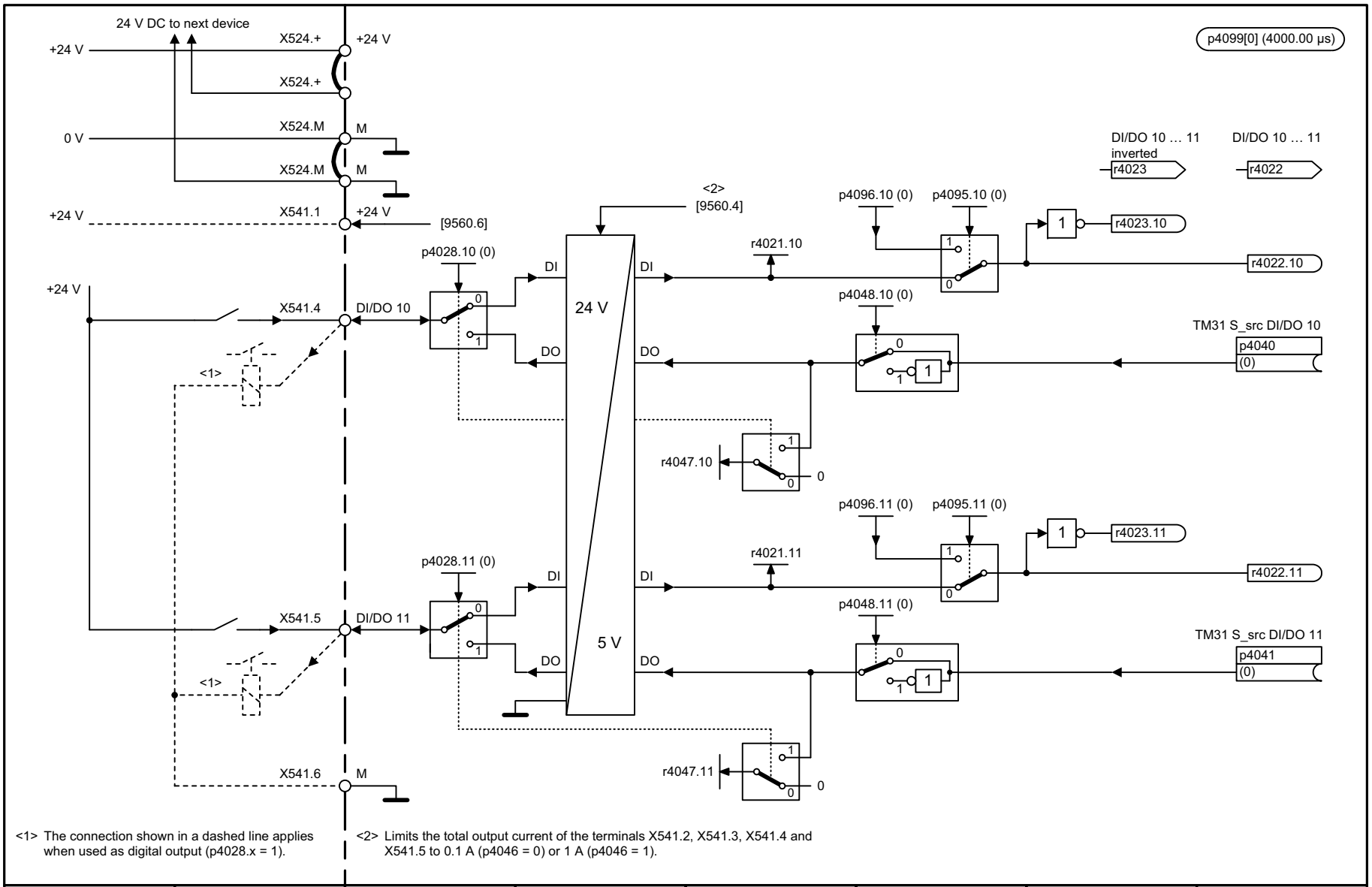

<1> The connection shown in a dashed line applies when used as digital output (p4028.x = 1).

<2> Limits the total output current of the terminals X541.2, X541.3, X541.4 and X541.5 to 0.1 A (p4046 = 0) or 1 A (p4046 = 1).

1	2	3	4	5	6	7	8
DO: TM31					fp_9562_51_eng.vsd	Function diagram	- 9562 -
Terminal Module 31 (TM31) - Digital inputs/outputs, bidirectional (DI/DO 10 ... DI/DO 11)					27.03.09 V04.05.00	SINAMICS	

Fig. 2-185 9562 – Digital inputs/outputs, bidirectional (DI/DO 10 ... DI/DO 11)

© Siemens AG 2012 All Rights Reserved

Fig. 2-186 9566 – Analog input 0 (AI 0)

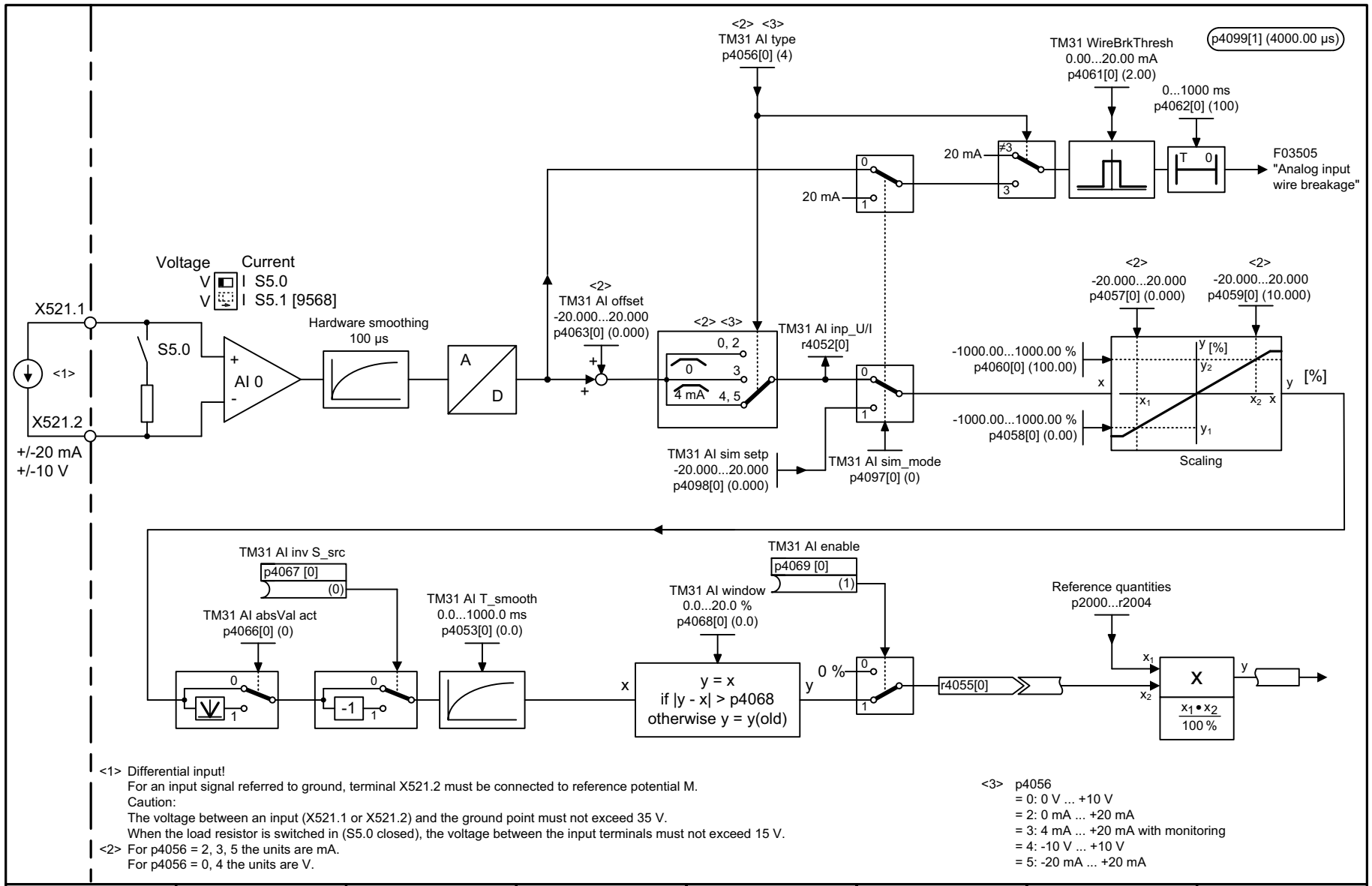

<1> Differential input!
For an input signal referred to ground, terminal X521.2 must be connected to reference potential M.
Caution:
The voltage between an input (X521.1 or X521.2) and the ground point must not exceed 35 V.
When the load resistor is switched in (S5.0 closed), the voltage between the input terminals must not exceed 15 V.

<2> For p4056 = 2, 3, 5 the units are mA.
For p4056 = 0, 4 the units are V.

<3> p4056
= 0: 0 V ... +10 V
= 2: 0 mA ... +20 mA
= 3: 4 mA ... +20 mA with monitoring
= 4: -10 V ... +10 V
= 5: -20 mA ... +20 mA

1	2	3	4	5	6	7	8
DO: TM31					fp_9566_51_eng.vsd	Function diagram	- 9566 -
Terminal Module 31 (TM31) - Analog input 0 (AI 0)					29.12.10 V04.05.00	SINAMICS	

© Siemens AG 2012 All Rights Reserved

Fig. 2-187 9568 – Analog input 1 (AI 1)

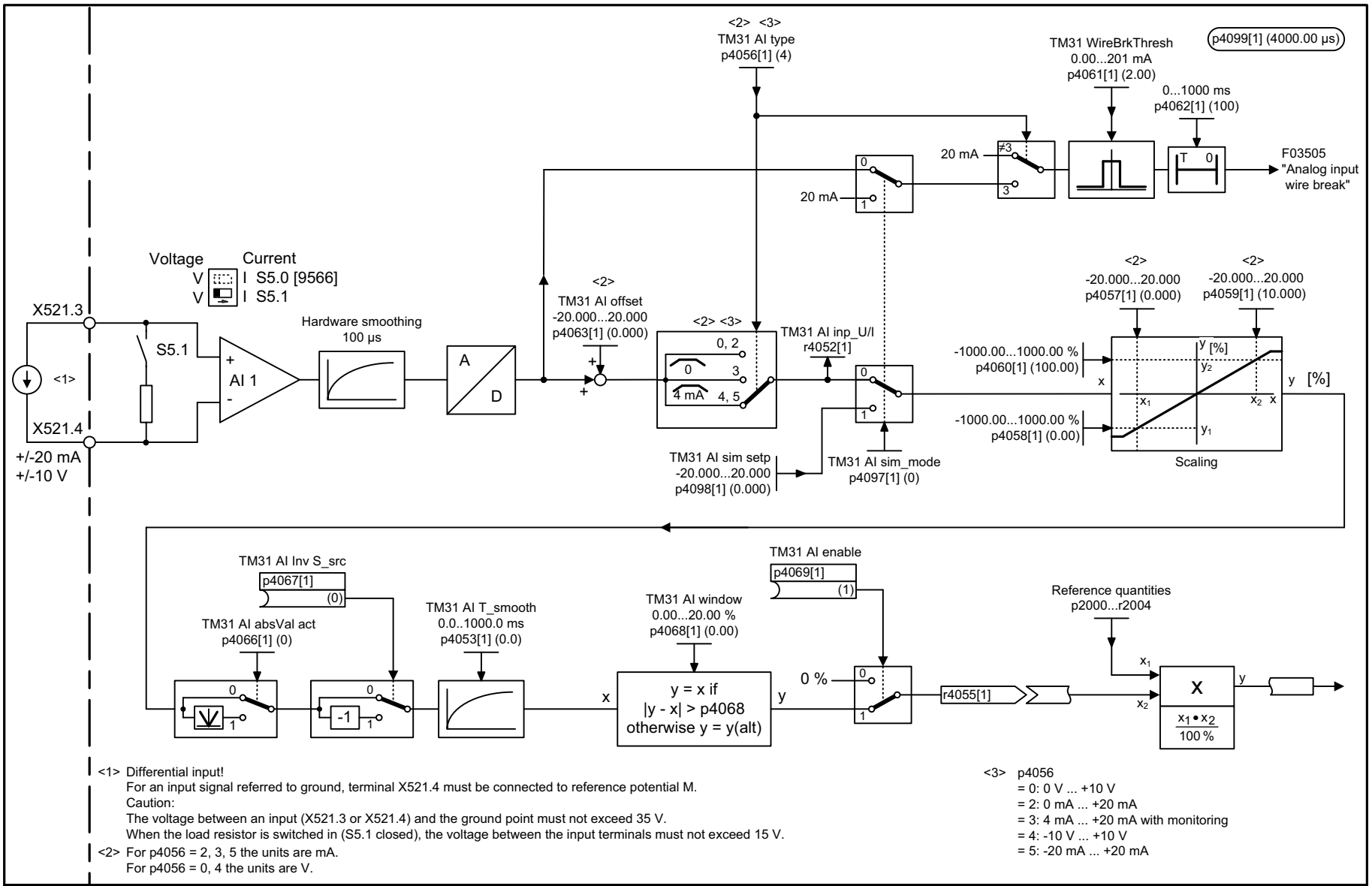

<1> Differential input!
For an input signal referred to ground, terminal X521.4 must be connected to reference potential M.
Caution:
The voltage between an input (X521.3 or X521.4) and the ground point must not exceed 35 V.
When the load resistor is switched in (S5.1 closed), the voltage between the input terminals must not exceed 15 V.

<2> For p4056 = 2, 3, 5 the units are mA.
For p4056 = 0, 4 the units are V.

<3> p4056
= 0: 0 V ... +10 V
= 2: 0 mA ... +20 mA
= 3: 4 mA ... +20 mA with monitoring
= 4: -10 V ... +10 V
= 5: -20 mA ... +20 mA

1	2	3	4	5	6	7	8
DO: TM31					fp_9568_51_eng.vsd	Function diagram	- 9568 -
Terminal Module 31 (TM31) - Analog input 1 (AI 1)					29.12.10 V04.05.00	SINAMICS	

© Siemens AG 2012 All Rights Reserved

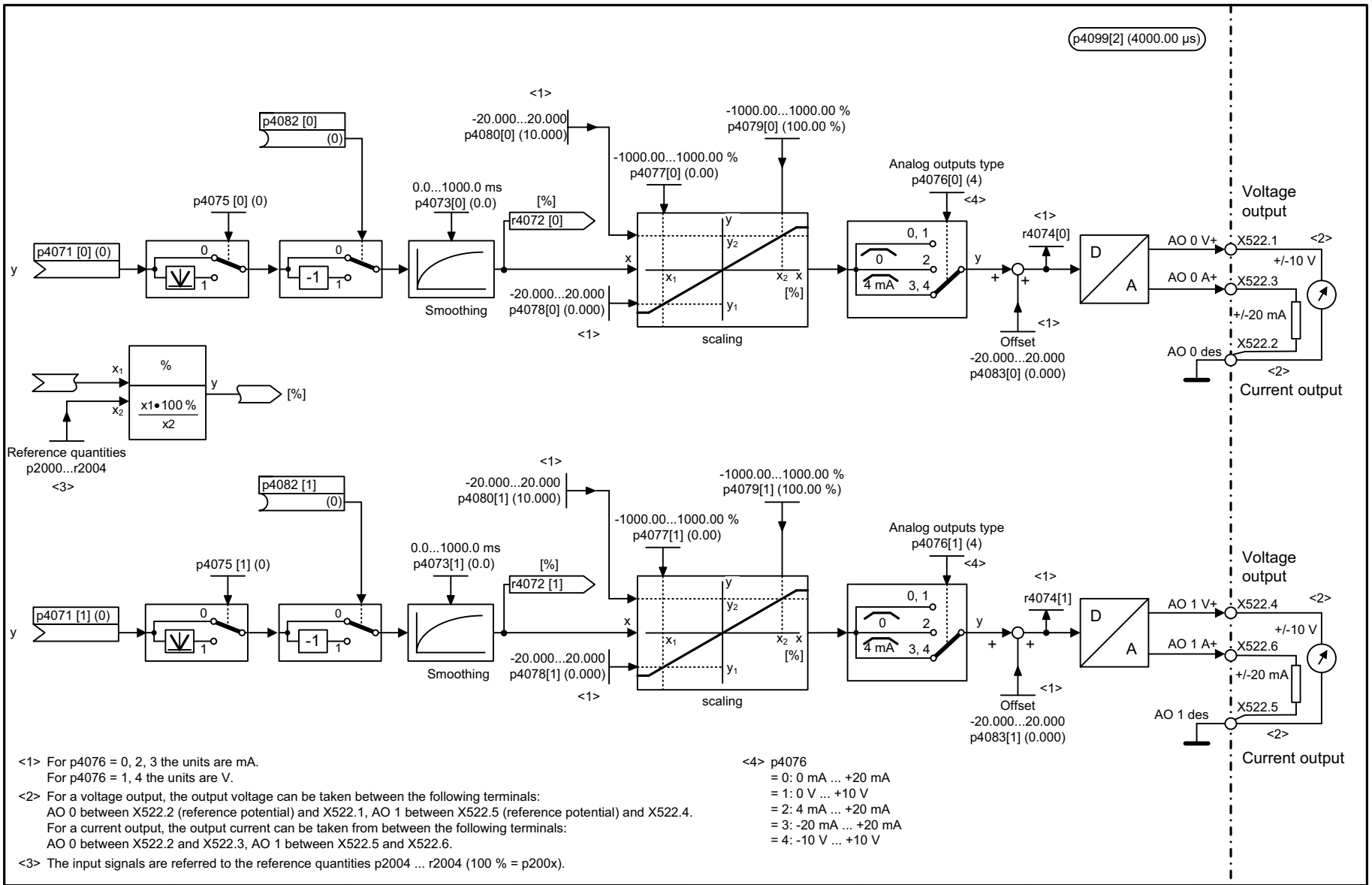

<1> For p4076 = 0, 2, 3 the units are mA.
For p4076 = 1, 4 the units are V.

<2> For a voltage output, the output voltage can be taken between the following terminals:
AO 0 between X522.2 (reference potential) and X522.1, AO 1 between X522.5 (reference potential) and X522.4.
For a current output, the output current can be taken from between the following terminals:
AO 0 between X522.2 and X522.3, AO 1 between X522.5 and X522.6.

<3> The input signals are referred to the reference quantities p2004 ... r2004 (100 % = p200x).

<4> p4076
= 0: 0 mA ... +20 mA
= 1: 0 V ... +10 V
= 2: 4 mA ... +20 mA
= 3: -20 mA ... +20 mA
= 4: -10 V ... +10 V

1	2	3	4	5	6	7	8
DO: TM31					fp_9572_51_eng.vsd	Function diagram	- 9572 -
Terminal Module 31 (TM31) - Analog outputs (AO 0 ... AO 1)					17.03.09 V04.05.00	SINAMICS	

Fig. 2-188 9572 – Analog outputs (AO 0 ... AO 1)

© Siemens AG 2012 All Rights Reserved

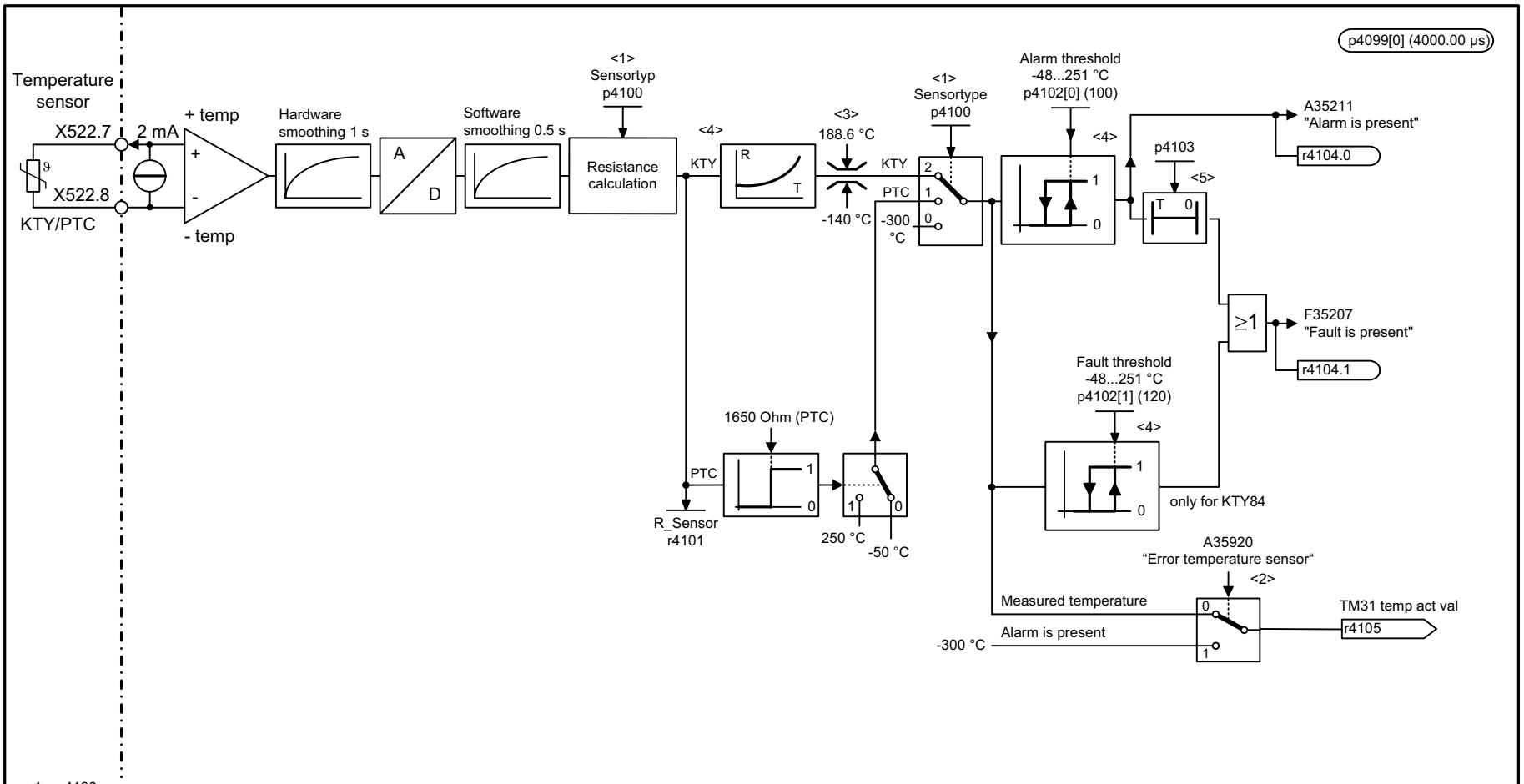

Fig. 2-189 9576 – Temperature evaluation (KTY/PTC)

<1> p4100
= 0: Evaluation disabled
= 1: PTC
= 2: KTY

<2> An alarm A35920 in the temperature evaluation of the TM31 is signaled to the next (downstream) vector control via the special temperature value -300 °C (refer to [9577]).

<3> As a result of the wire breakage monitoring [9577.3] the maximum temperature that can be measured is limited to approx. 188.6 °C.

<4> A value > 250 °C de-activates the alarm or fault.

<5> For KTY p4103 = 0 ≙ Output from TempTimer (0).
For PTC p4103 = 0 ≙ delay time = 0s.

1	2	3	4	5	6	7	8
DO: TM31					fp_9576_51_eng.vsd	Function diagram	- 9576 -
Terminal Module 31 (TM31) - Temperature evaluation (KTY/PTC)					28.11.11 V04.05.00	SINAMICS	

© Siemens AG 2012 All Rights Reserved

2.24 Terminal Module 150 (TM150)

Function diagrams

9625 – Temperature evaluation structure (channel 0 ... 11)	2-1193
9626 – Temperature evaluation 1x2, 3, 4-wire (channel 0 ... 5)	2-1194
9627 – Temperature evaluation 2x2-wire (channel 0 ... 11)	2-1195

© Siemens AG 2012 All Rights Reserved

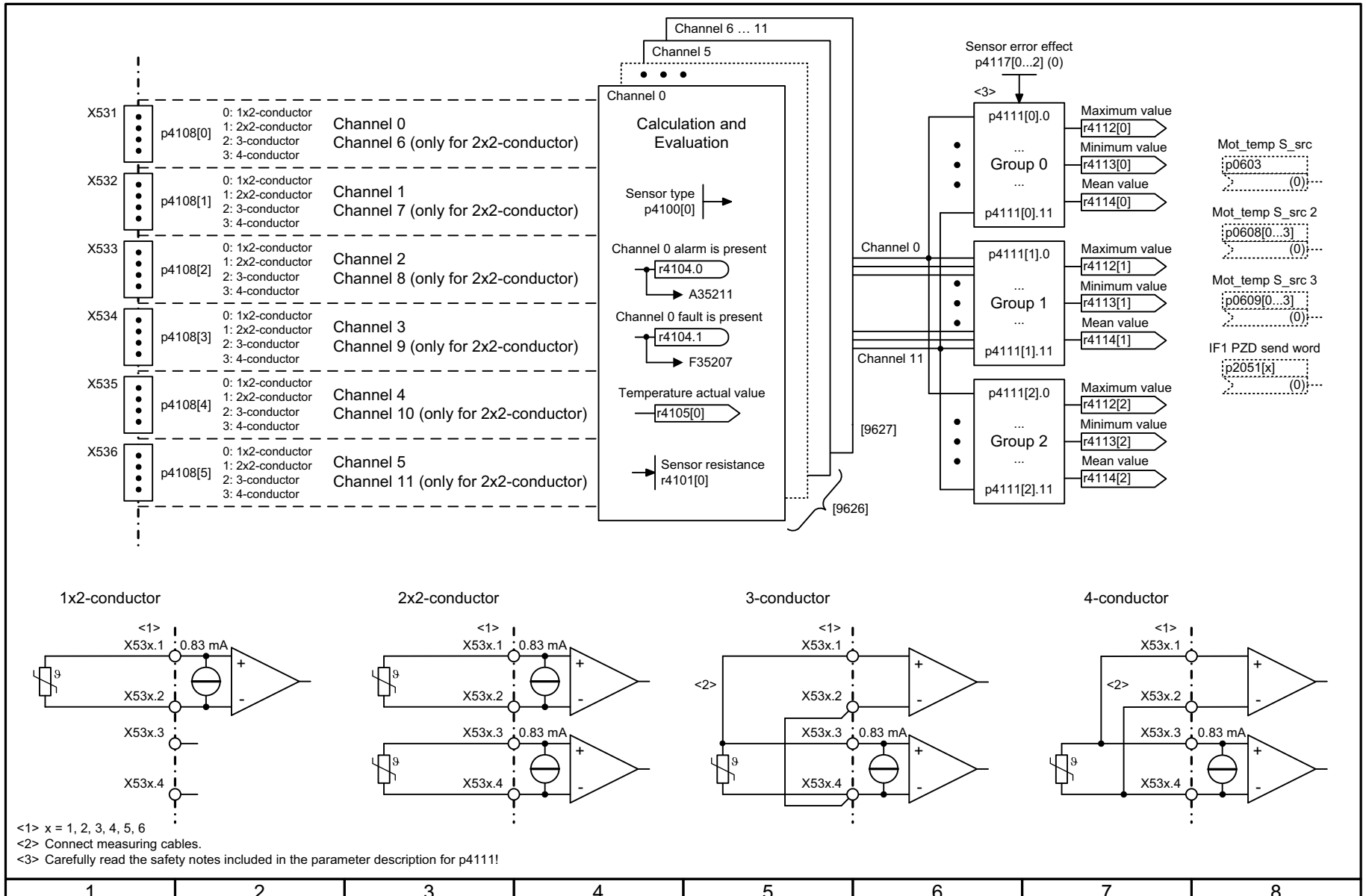

<1> x = 1, 2, 3, 4, 5, 6
<2> Connect measuring cables.
<3> Carefully read the safety notes included in the parameter description for p4111!

1	2	3	4	5	6	7	8
DO: TM150					fp_9625_51_eng.vsd	Function diagram	- 9625 -
Terminal Module 150 (TM150) - Temperature evaluation structure (Channel 0 … 11)					15.11.11 V04.05.00	SINAMICS	

Fig. 2-190 9625 – Temperature evaluation structure (channel 0 … 11)

© Siemens AG 2012 All Rights Reserved

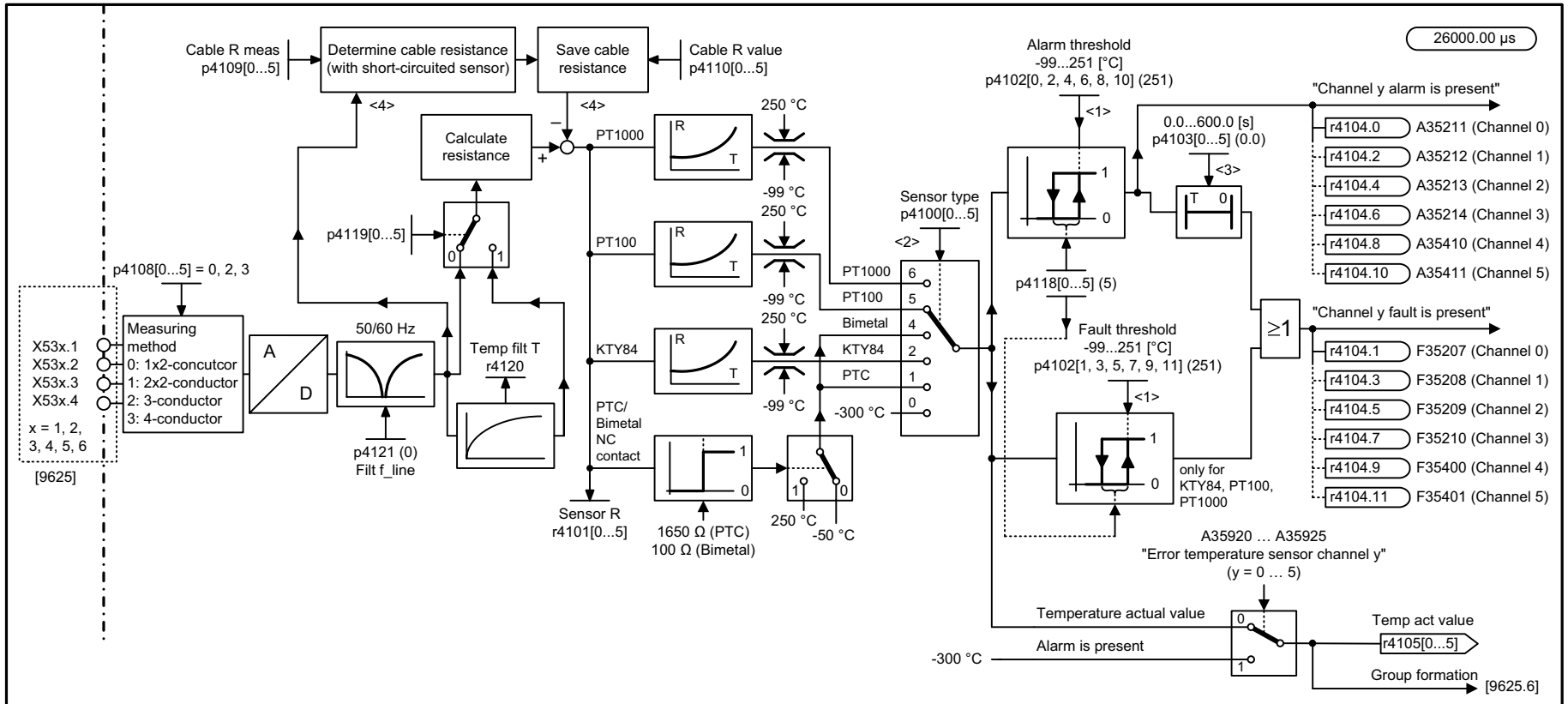

<1> For p4102[0...23] = 251 °C the evaluation of the appropriate threshold is deactivated.
<2> p4100[0...11]
= 0: Evaluation disabled
= 1: PTC thermistor (with monitoring for short-circuit)
= 2: KTY84 (with monitoring for wire break and short-circuit)
= 4: Bimetal NC contact (no monitoring)
= 5: PT100 (with monitoring for wire break and short-circuit)
= 6: PT1000 (with monitoring for wire break and short-circuit)
<3> For p4103 = 0 s and sensor type "KTY84", "PT100", "PT1000" (p4100[0...11] = 2, 5, 6) the following applies:
- The relevant fault can only be triggered via the fault threshold (the timer output is always logical 0).
For p4103 = 0 s and sensor type "PTC thermistor", "Bimetal NC contact" (p4100[0...11] = 1, 4) the following applies:
- The corresponding alarm and fault are output simultaneously (delay time = 0 s).
<4> Only for 1x2-/2x2-conductor evaluation (p4108[0...5] = 0, 1).

1	2	3	4	5	6	7	8
DO: TM150					fp_9626_51_eng.vsd	Function diagram	- 9626 -
Terminal Module 150 (TM150) - Temperature evaluation 1x2-, 3-, 4-conductor (Channel 0 … 5)					15.11.11 V04.05.00	SINAMICS	

Fig. 2-191 9626 – Temperature evaluation 1x2, 3, 4-wire (channel 0 … 5)

© Siemens AG 2012 All Rights Reserved

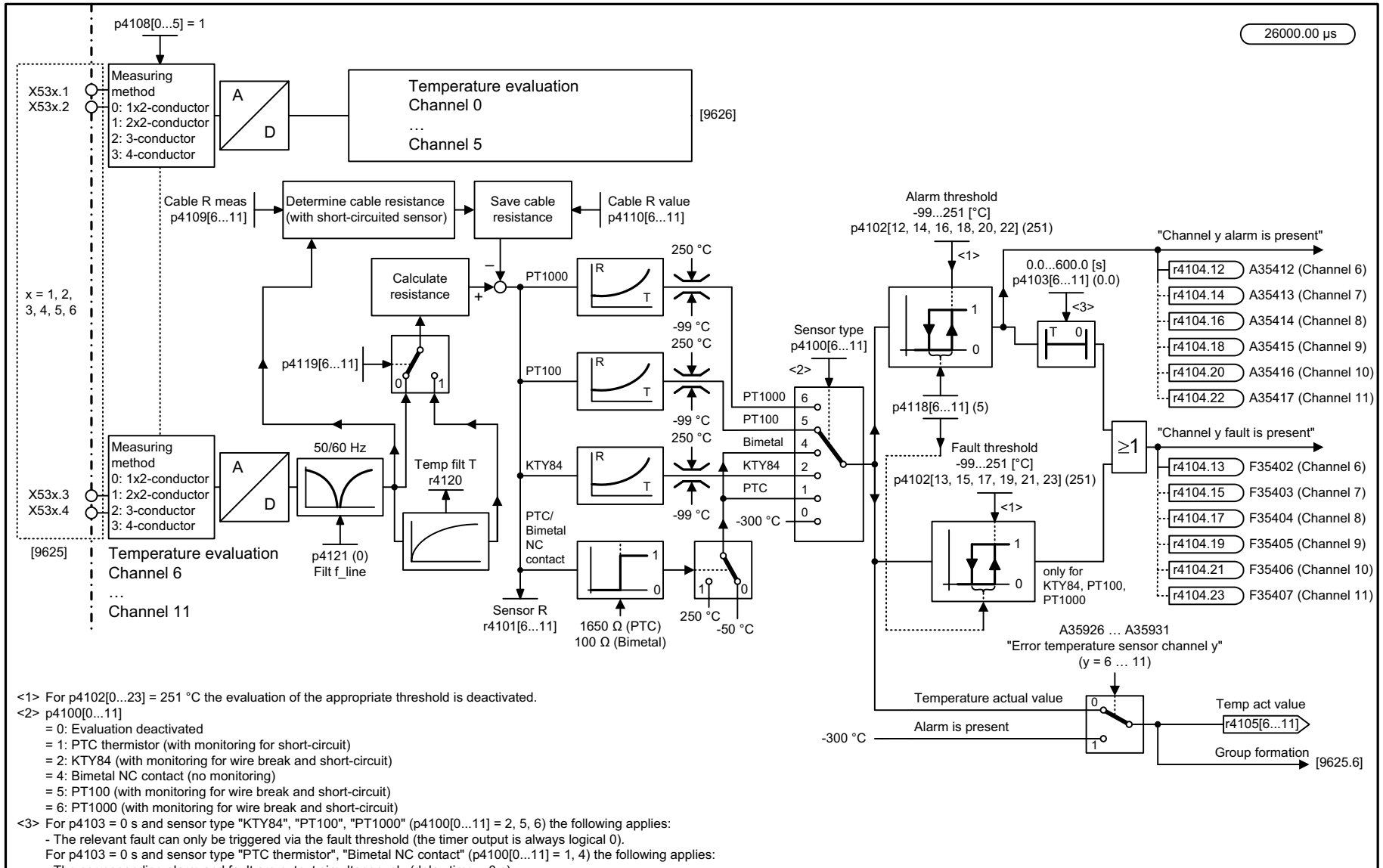

<1> For p4102[0...23] = 251 °C the evaluation of the appropriate threshold is deactivated.
<2> p4100[0...11]
= 0: Evaluation deactivated
= 1: PTC thermistor (with monitoring for short-circuit)
= 2: KTY84 (with monitoring for wire break and short-circuit)
= 4: Bimetal NC contact (no monitoring)
= 5: PT100 (with monitoring for wire break and short-circuit)
= 6: PT1000 (with monitoring for wire break and short-circuit)
<3> For p4103 = 0 s and sensor type "KTY84", "PT100", "PT1000" (p4100[0...11] = 2, 5, 6) the following applies:
- The relevant fault can only be triggered via the fault threshold (the timer output is always logical 0).
For p4103 = 0 s and sensor type "PTC thermistor", "Bimetal NC contact" (p4100[0...11] = 1, 4) the following applies:
- The corresponding alarm and fault are output simultaneously (delay time = 0 s).

1	2	3	4	5	6	7	8
DO: TM150					fp_9627_51_eng.vsd	Function diagram	- 9627 -
Terminal Module 150 (TM150) - Temperature evaluation 2x2-conductor (Channel 0 … 11)					15.11.11 V04.05.00	SINAMICS	

Fig. 2-192 9627 – Temperature evaluation 2x2-wire (channel 0 … 11)

© Siemens AG 2012 All Rights Reserved

2.25 Voltage Sensing Module (VSM)

Function diagrams

9880 – Analog inputs (AI 0 ... AI 3)	2-1197
9886 – Temperature evaluation	2-1198

© Siemens AG 2012 All Rights Reserved

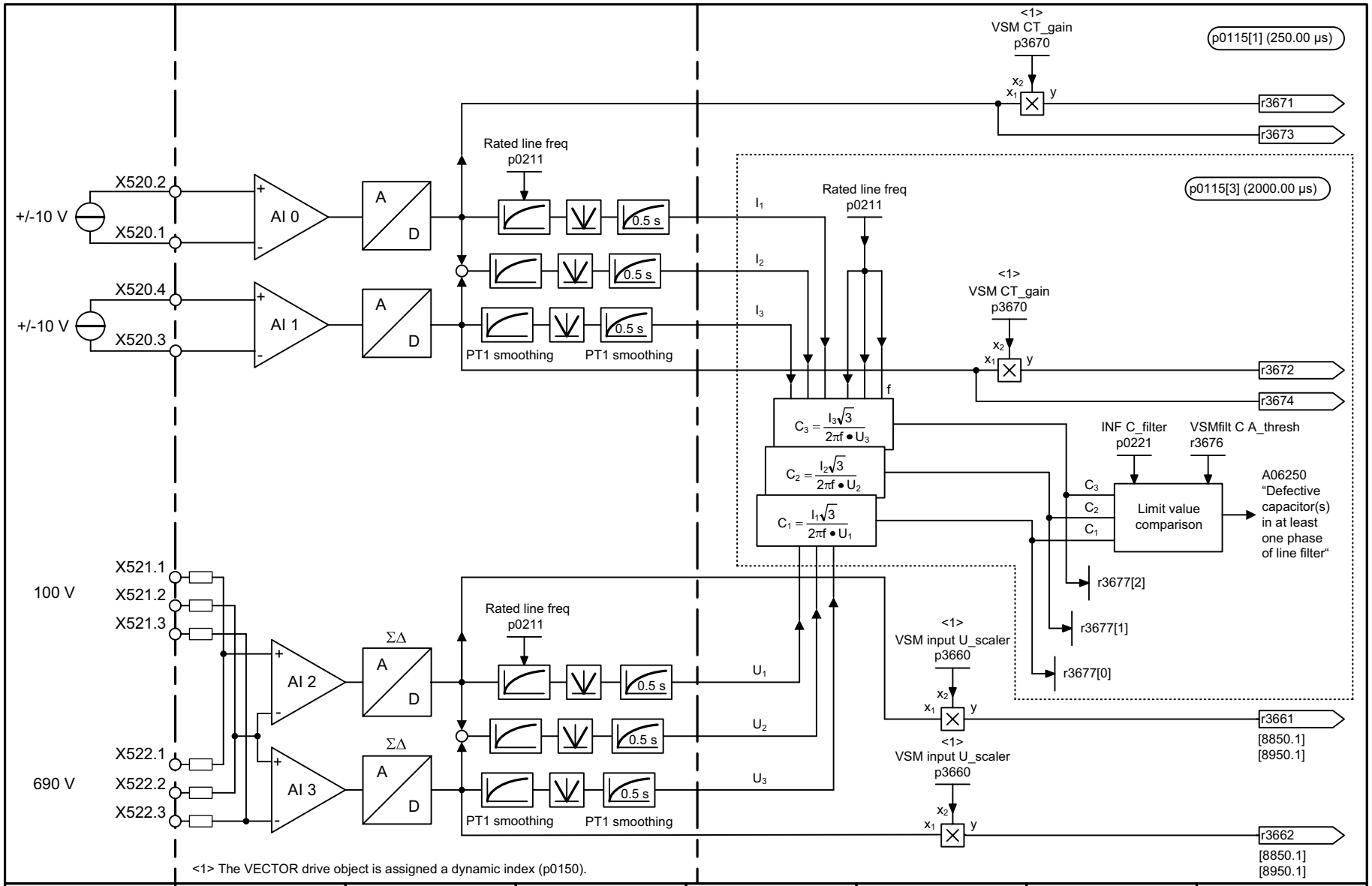

Fig. 2-193 9880 – Analog inputs (AI 0 ... AI 3)

1	2	3	4	5	6	7	8
DO: A_INF, S_INF, VECTOR					fp_9880_54_eng.vsd	Function diagram	- 9880 -
Voltage Sensing Module (VSM) - Analog inputs (AI 0 ... AI 3)					26.06.08 V04.05.00	S120/S150/G130/G150	

© Siemens AG 2012 All Rights Reserved

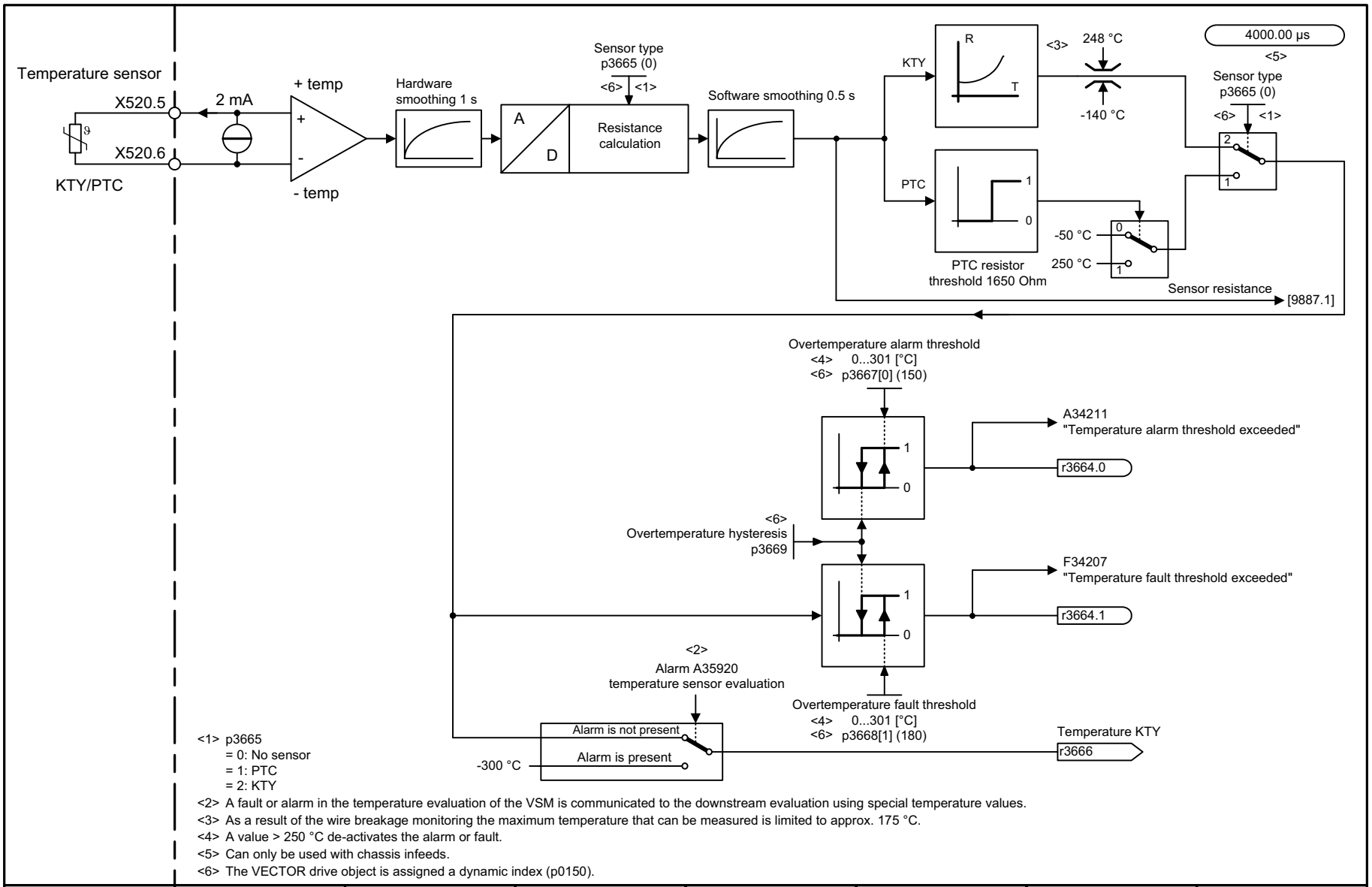

<1> p3665
= 0: No sensor
= 1: PTC
= 2: KTY

<2> A fault or alarm in the temperature evaluation of the VSM is communicated to the downstream evaluation using special temperature values.
<3> As a result of the wire breakage monitoring the maximum temperature that can be measured is limited to approx. 175 °C.
<4> A value > 250 °C de-activates the alarm or fault.
<5> Can only be used with chassis infeeds.
<6> The VECTOR drive object is assigned a dynamic index (p0150).

1	2	3	4	5	6	7	8
DO: A_INF, S_INF, VECTOR					fp_9886_54_eng.vsd	Function diagram	- 9886 -
Voltage Sensing Module (VSM) - Temperature evaluation					08.06.07 V04.05.00	S120/S150/G130/G150	

Fig. 2-194 9886 – Temperature evaluation

© Siemens AG 2012 All Rights Reserved

2.26 Basic Operator Panel 20 (BOP20)

Function diagrams

9912 – Control word interconnection 2-1200

© Siemens AG 2012 All Rights Reserved

PROFIdrive sampling time
Refer to [1020.7]

Fig. 2-195 9912 – Control word interconnection

Interconnection STW BOP (r0019) <1>

Signal	Meaning	Interconnection parameters
STW BOP.0	**1 = On** **0 = OFF (OFF1)**	p0840[0] = r0019.0
STW BOP.1	**1 = No coast down** 0 = Coast down (OFF2)	p0844[0] = r0019.1
STW BOP.2	**1 = No fast stop** 0 = Fast stop (OFF3)	p0848[0] = r0019.2
STW BOP.3	**Reserved**	-
STW BOP.4	**Reserved**	-
STW BOP.5	**Reserved**	-
STW BOP.6	**Reserved**	-
STW BOP.7	**↑ = Acknowledge fault**	p2102[0] = r0019.7
STW BOP.8	**Reserved**	-
STW BOP.9	**Reserved**	-
STW BOP.10	**Reserved**	-
STW BOP.11	**Reserved**	-
STW BOP.12	**Reserved**	-
STW BOP.13	**1 = Motorized potentiometer, raise**	p1035[0] = r0019.13
STW BOP.14	**1 = Motorized potentiometer, lower**	p1036[0] = r0019.14
STW BOP.15	**Reserved**	-

<1> The BICO interconnection represents an example that can be be changed by the user.

1	2	3	4	5	6	7	8
DO: CU_G, CU_S					fp_9912_54_eng.vsd	Function diagram	- 9912 -
Basic Operator Panel 20 (BOP20) - Control word interconnection					16.01.07 V04.05.00	S120/S150/G130/G150	

© Siemens AG 2012 All Rights Reserved

Faults and alarms

3

Contents

3.1	Overview of faults and alarms	3-1202
3.2	List of faults and alarms	3-1212

© Siemens AG 2012 All Rights Reserved

3.1 Overview of faults and alarms

3.1.1 General information on faults and alarms

Fault and alarm displays

If a fault occurs, the drive indicates this by issuing corresponding fault(s) and/or alarm(s).

The following methods for displaying faults and alarms are available:

- Display via the fault and alarm buffer with PROFIBUS.
- Display online via the commissioning software.

Differences between faults and alarms

The differences between faults and alarms are as follows:

Table 3-1 Differences between faults and alarms

Type	Description
Faults	What happens when a fault occurs? • The appropriate fault reaction is triggered. • Status signal ZSW1.3 is set. • The fault is entered in the fault buffer. How are faults eliminated? • Remove the original cause of the fault. • Acknowledge the fault.
Alarms	What happens when an alarm occurs? • Status signal ZSW1.7 is set. • The alarm is entered in the alarm buffer. How are alarms eliminated? • Alarms acknowledge themselves. If the cause of the alarm is no longer present, they automatically reset themselves.

© Siemens AG 2012 All Rights Reserved

Fault reactions

The following fault reactions are defined:

Table 3-2 Fault reactions

List	PROFI-drive	Reaction	Description
NONE	-	None	No reaction when a fault occurs. **Note:** When the "Basic positioner" function module is activated (r0108.4 = 1), the following applies: When a fault occurs with fault reaction "NONE", an active traversing task is interrupted and the system switches to tracking mode until the fault has been rectified and acknowledged.
OFF1	ON/ OFF	Brake along the ramp-function generator deceleration ramp followed by pulse disable	**Speed control (p1300 = 20, 21)** • n_set = 0 is input immediately to brake the drive along the ramp-function generator deceleration ramp (p1121). • When zero speed is detected, the motor holding brake (if parameters have been assigned for it) is closed (p1215). The pulses are suppressed when the brake closing time (p1217) expires. Zero speed is detected if the actual speed drops below the threshold (p1226) or if the monitoring time (p1227) started when the speed setpoint <= speed threshold (p1226) has expired. **Closed-loop torque control (p1300 = 23)** • The following applies for torque control: Reaction as for OFF2 • When the system switches to torque control with p1501, the following applies: No separate braking reaction. If the actual speed value drops below the speed threshold (p1226) or the timer stage (p1227) has expired, the motor holding brake (if one is being used) is closed. The pulses are suppressed when the brake closing time (p1217) expires.
OFF1_ DELAYED	-	As for OFF1, but delayed	Faults with this fault reaction do not become effective until after the delay time set in p3136. The remaining time up to OFF1 is displayed in r3137.
OFF2	COAST STOP	Internal/external pulse disable	**Closed-loop speed and torque control** • Instantaneous pulse suppression, the drive "coasts" to a standstill. • The motor holding brake (if one is being used) is closed immediately. • "Switching on inhibited" is activated.

© Siemens AG 2012 All Rights Reserved

Table 3-2 Fault reactions, continued

List	PROFI-drive	Reaction	Description
OFF3	QUICK STOP	Brake along the OFF3 deceleration ramp followed by pulse disable	**Speed control (p1300 = 20, 21)** • n_set = 0 is input immediately to brake the drive along the OFF3 deceleration ramp (p1135). • When zero speed is detected, the motor holding brake (if parameters have been assigned for it) is closed. The pulses are suppressed when the closing time of the holding brake (p1217) expires. Zero speed is detected if the actual speed drops below the threshold (p1226) or if the monitoring time (p1227) started when the speed setpoint <= speed threshold (p1226) has expired. • "Switching on inhibited" is activated. **Closed-loop torque control (p1300 = 23)** • Changeover to speed-controlled operation and other reactions as described for speed-controlled operation.
STOP1	-	-	Under development
STOP2	-	n_set = 0	• n_set = 0 is input immediately to brake the drive along the OFF3 deceleration ramp (p1135). • The drive remains in speed control mode.
IASC/ DCBRAKE	-	-	• For synchronous motors, the following applies: If a fault occurs with this fault reaction, an internal armature short-circuit is triggered. The conditions for p1231 = 4 must be observed. • For induction motors, the following applies: If a fault occurs with this fault reaction, DC braking is triggered. DC braking must have been commissioned (p1232, p1233, p1234).
ENCODER	-	Internal/external pulse disable (p0491)	The fault reaction ENCODER is applied as a function of the setting in p0491. Factory setting: p0491 = 0 --> Encoder fault causes OFF2 **Notice:** When changing p0491, it is imperative that the information in the description of this parameter is carefully observed.

© Siemens AG 2012 All Rights Reserved

Acknowledgement of faults

The list of faults and alarms specifies how to acknowledge each fault after the cause has been remedied.

Table 3-3 Acknowledgement of faults

Acknowledge-ment	Description
POWER ON	The fault is acknowledged by a POWER ON process (switch drive unit off and on again). **Note:** If this action has not eliminated the fault cause, the fault is displayed again immediately after power up.
IMMEDIATELY	Faults can be acknowledged on one drive object (Points 1 to 3) or on all drive objects (point 4) as follows: 1 Acknowledge by setting parameter: p3981 = 0 --> 1 2 Acknowledge via binector inputs: p2103 BI: 1. Acknowledge faults p2104 BI: 2. Acknowledge faults p2105 BI: 3. Acknowledge faults 3 Acknowledge using PROFIBUS control signal: STW1.7 = 0 --> 1 (edge) 4 Acknowledge all faults p2102 BI: Acknowledge all faults All of the faults on all of the drive objects of the drive system can be acknowledged using this binector input. **Note:** • These faults can also be acknowledged by a POWER ON operation. • If this action has not eliminated the fault cause, the fault will continue to be displayed after acknowledgement. • Safety Integrated faults The "Safe standstill" (SH) function must be deselected before these faults are acknowledged.
PULSE DIS-ABLE	The fault can only be acknowledged with a pulse disable (r0899.11 = 0). The same options are available for acknowledging as described under acknowledge-ment with IMMEDIATELY.

© Siemens AG 2012 All Rights Reserved

Saving the fault buffer when switching off

The contents of the fault buffer are saved to the non-volatile memory when the Control Unit is switched off, i.e. the fault buffer history is still available when the unit is switched on again.

The fault buffer of a drive object comprises the following parameters:

- r0945[0...63], r0947[0...63], r0948[0...63], r0949[0...63]
- r2109[0...63], r2130[0...63], r2133[0...63], r2136[0...63]

The fault buffer contents can be deleted manually as follows:

- Delete fault buffer for all drive objects:
  p2147 = 1 --> p2147 = 0 is automatically set after execution.
- Delete fault buffer for a specific drive object:
  p0952 = 0 --> The parameter belongs to the specified drive object.

The fault buffer contents are automatically deleted when the following occurs:

- Restore factory setting (p0009 = 30 and p0976 = 1).
- Download with modified structure (e.g. number of drive objects changed).
- Power-up after other parameter values have been loaded (e.g. p0976 = 10).
- Upgrade firmware to later version.

© Siemens AG 2012 All Rights Reserved

3.1.2 Explanation of the list of faults and alarms

The data in the following example has been chosen at random. The information listed below is the maximum amount of information that a description can contain. Some of the information is optional.

The list of faults and alarms (See Section 3.2) is structured as follows:

- Start of example -

Axxxxx (F, N)	**Fault location (optional): Name**
Message value:	Component number: %1, fault cause: %2
Drive object:	List of objects.
Reaction:	NONE
Acknowledge-ment:	NONE
Cause:	Description of possible causes. Fault value (r0949, interpret format): or alarm value (r2124, interpret format): (optional) Information about fault or alarm values (optional).
Remedy:	Description of possible remedies.
Reaction to F:	A_INFEED: OFF2 (OFF1, NONE) SERVO: NONE (OFF1, OFF2, OFF3) VECTOR: NONE (OFF1, OFF2, OFF3)
Acknowledge-ment for F:	IMMEDIATELY (POWER ON)
Reaction to N:	NONE
Acknowledge-ment for N:	NONE

- End of example -

Axxxxx	**Alarm xxxxx**
Axxxxx (F, N)	**Alarm xxxxx (message type can be changed to F or N)**
Fxxxxx	**Fault xxxxx**
Fxxxxx (A, N)	**Fault xxxxx (message type can be changed to F or N)**
Nxxxxx	**No message**
Nxxxxx (A)	**No message (message type can be changed to A)**
Cxxxxx	**Safety message (separate message buffer)**

A message comprises a letter followed by the relevant number.

The meaning of the letters is as follows:

- A means "Alarm".
- F means "Fault".
- N means "No message" or "Internal message" ("No report")
- C means "Safety message"

The optional brackets indicate whether the type specified for this message can be changed and which message types can be adjusted via parameters (p2118, p2119).

Information on reaction and acknowledgement is specified independently for a message with an adjustable message type (e.g. reaction to F, acknowledgement for F).

© Siemens AG 2012 All Rights Reserved

Note:

You can change the default properties of a fault or alarm by setting parameters.

The list of faults and alarms (see Section 3.2) provides information in relation to the properties of a message that have been set as standard. If the properties of a specific message are changed, the corresponding information may have to be modified in this list.

Fault location (optional): Name

The fault location (optional), the name of the fault or alarm and the message number are all used to identify the message (e.g. with the commissioning software).

Message value:

The information provided under the message value tells you about the composition of the fault/alarm value.

Example:

Message value: Component number: %1, fault cause: %2

This message value contains information about the component number and fault cause. The entries %1 and %2 are placeholders, which are filled appropriately in online operation (e.g. with the commissioning software).

Drive object:

Each message (fault/alarm) specifies the drive object in which it can be found.

A message can belong to either one, several, or all drive objects.

Reaction: Default fault reaction (adjustable fault reaction)

Specifies the default reaction in the event of a fault.

The optional brackets indicate whether the default fault reaction can be changed and which fault reactions can be adjusted via parameters (p2100, p2101).

Note:

See Section 3.1.1

Acknowledgement: Default acknowledgement (adjustable acknowledgement)

Specifies the default method of acknowledging faults after the cause has been eliminated.

The optional brackets indicate whether the default acknowledgement can be changed and which acknowledgement can be adjusted via parameters (p2126, p2127).

Note:

See Section 3.1.1

© Siemens AG 2012 All Rights Reserved

Cause:

Describes the possible causes of the fault/alarm. A fault or alarm value can also be specified (optional).

Fault value (r0949, format):

The fault value is entered in the fault buffer in r0949[0...63] and specifies additional, more precise information about a fault.

Alarm value (r2124, format):

The alarm value specifies additional, more precise information about an alarm.

The alarm value is entered in the alarm buffer in r2124[0...7] and specifies additional, more precise information about an alarm.

Remedy:

Describes the methods available for eliminating the cause of the active fault or alarm.

Alarm

In certain cases, service and maintenance personnel are responsible for choosing a suitable method to eliminate the cause of faults.

© Siemens AG 2012 All Rights Reserved

3.1.3 Number ranges of faults and alarms

Note:

The following number ranges represent an overview of all faults and alarms used in the SINAMICS drive family.

The faults and alarms for the product described in this List Manual are described in detail in Section 3.2.

Faults and alarms are organized into the following number ranges:

Table 3-4 Number ranges of faults and alarms

From	To	Range
1000	3999	Control Unit
4000	4999	Reserved
5000	5999	Power unit
6000	6899	Infeed
6900	6999	Braking Module
7000	7999	Drive
8000	8999	Option Board
9000	12999	Reserved
13000	13010	Licensing
13002	19999	Reserved
20000	29999	OEM
30000	30999	DRIVE-CLiQ component power unit
31000	31999	DRIVE-CLiQ component encoder 1
32000	32999	DRIVE-CLiQ component encoder 2 **Note:** Faults that occur are automatically output as an alarm if the encoder is parameterized as a direct measuring system and does not intervene in the motor control.
33000	33999	DRIVE-CLiQ component encoder 3 **Note:** Faults that occur are automatically output as an alarm if the encoder is parameterized as a direct measuring system and does not intervene in the motor control.
34000	34999	Voltage Sensing Module (VSM)
35000	35199	Terminal Module 54F (TM54F)
35200	35999	Terminal Module 31 (TM31)
36000	36999	DRIVE-CLiQ Hub Module

© Siemens AG 2012 All Rights Reserved

Table 3-4 Number ranges of faults and alarms, continued

From	To	Range
40000	40999	Controller Extension 32 (CX32)
41000	48999	Reserved
49000	49999	SINAMICS GM/SM/GL
50000	50499	Communication Board (COMM BOARD)
50500	59999	OEM Siemens
60000	65535	SINAMICS DC MASTER (DC control)

© Siemens AG 2012 All Rights Reserved

3.2 List of faults and alarms

Product: SINAMICS G130/G150, Version: 4502400, Language: eng
Objects: B_INF, CU_G130_DP, CU_G130_PN, CU_G150_DP, CU_G150_PN, ENC, HUB, TB30, TM150, TM31, TM54F_MA, TM54F_SL, VECTOR_G

F01000 Internal software error

Message value: %1

Drive object: All objects

Reaction: OFF2

Acknowledge: POWER ON

Cause: An internal software error has occurred.
Fault value (r0949, interpret hexadecimal):
Only for internal Siemens troubleshooting.

Remedy: - evaluate fault buffer (r0945).
- carry out a POWER ON (power off/on) for all components.
- upgrade firmware to later version.
- contact the Hotline.
- replace the Control Unit.

F01001 FloatingPoint exception

Message value: %1

Drive object: All objects

Reaction: OFF2

Acknowledge: POWER ON

Cause: An exception occurred during an operation with the FloatingPoint data type.
The error may be caused by the base system or an OA application (e.g., FBLOCKS, DCC).
Fault value (r0949, interpret hexadecimal):
Only for internal Siemens troubleshooting.
Note:
Refer to r9999 for further information about this fault.
r9999[0]: Fault number.
r9999[1]: Program counter at the time when the exception occurred.
r9999[2]: Cause of the FloatingPoint exception.
Bit 0 = 1: Operation invalid
Bit 1 = 1: Division by zero
Bit 2 = 1: Overflow
Bit 3 = 1: Underflow
Bit 4 = 1: Imprecise result

Remedy: - carry out a POWER ON (power off/on) for all components.
- check configuration and signals of the blocks in FBLOCKS.
- check configuration and signals of DCC charts.
- upgrade firmware to later version.
- contact the Hotline.

F01002 Internal software error

Message value: %1

Drive object: All objects

Reaction: OFF2

Acknowledge: IMMEDIATELY

Cause: An internal software error has occurred.
Fault value (r0949, interpret hexadecimal):
Only for internal Siemens troubleshooting.

Remedy: - carry out a POWER ON (power off/on) for all components.
- upgrade firmware to later version.
- contact the Hotline.

© Siemens AG 2012 All Rights Reserved

F01003 Acknowledgement delay when accessing the memory

Message value: %1
Drive object: All objects
Reaction: OFF2
Acknowledge: IMMEDIATELY
Cause: A memory area was accessed that does not return a "READY".
Fault value (r0949, interpret hexadecimal):
Only for internal Siemens troubleshooting.
Remedy: - carry out a POWER ON (power off/on) for all components.
- contact the Hotline.

N01004 (F, A) Internal software error

Message value: %1
Drive object: All objects
Reaction: NONE
Acknowledge: NONE
Cause: An internal software error has occurred.
Fault value (r0949, hexadecimal):
Only for internal Siemens troubleshooting.
Remedy: - read out diagnostics parameter (r9999).
- contact the Hotline.
See also: r9999 (Software error internal supplementary diagnostics)
Reaction upon F: OFF2
Acknowl. upon F: POWER ON
Reaction upon A: NONE
Acknowl. upon A: NONE

F01005 Firmware download for DRIVE-CLiQ component unsuccessful

Message value: Component number: %1, fault cause: %2
Drive object: All objects
Reaction: NONE
Acknowledge: IMMEDIATELY
Cause: It was not possible to download the firmware to a DRIVE-CLiQ component.
Fault value (r0949, interpret hexadecimal):
yyxxxx hex: yy = component number, xxxx = fault cause
xxxx = 000B hex = 11 dec:
DRIVE-CLiQ component has detected a checksum error.
xxxx = 000F hex = 15 dec:
The selected DRIVE-CLiQ component did not accept the contents of the firmware file.
xxxx = 0012 hex = 18 dec:
Firmware version is too old and is not accepted by the component.
xxxx = 0013 hex = 19 dec:
Firmware version is not suitable for the hardware release of the component.
xxxx = 0065 hex = 101 dec:
After several communication attempts, no response from the DRIVE-CLiQ component.
xxxx = 008B hex = 139 dec:
Initially, a new boot loader is loaded (must be repeated after POWER ON).
xxxx = 008C hex = 140 dec:
Firmware file for the DRIVE-CLiQ component not available on the memory card.
xxxx = 008D hex = 141 dec:
An inconsistent length of the firmware file was signaled. The firmware download may have been caused by a loss of connection to the firmware file. This can occur during a project download/reset in the case of a SINAMICS Integrated Control Unit, for example.
xxxx = 008F hex = 143 dec:
Component has not changed to the mode for firmware download. It was not possible to delete the existing firmware.
xxxx = 0090 hex = 144 dec:
When checking the firmware that was downloaded (checksum), the component detected a fault. It is possible that the file on the memory card is defective.

© Siemens AG 2012 All Rights Reserved

xxxx = 0091 hex = 145 dec:
Checking the loaded firmware (checksum) was not completed by the component in the appropriate time.
xxxx = 009C hex = 156 dec:
Component with the specified component number is not available (p7828).
xxxx = Additional values:
Only for internal Siemens troubleshooting.

Remedy: - check the selected component number (p7828).
- check the DRIVE-CLiQ connection.
- save suitable firmware file for download in the directory "/siemens/sinamics/code/sac/".
- use a component with a suitable hardware version
- after POWER ON has been carried out again for the DRIVE-CLiQ component, download the firmware again. Depending on p7826, the firmware will be automatically downloaded.

A01006 Firmware update for DRIVE-CLiQ component required

Message value: Component number: %1

Drive object: All objects

Reaction: NONE

Acknowledge: NONE

Cause: The firmware of a DRIVE-CLiQ component must be updated as there is no suitable firmware or firmware version in the component for operation with the Control Unit.
Alarm value (r2124, interpret decimal):
Component number of the DRIVE-CLiQ component.

Remedy: Firmware update using the commissioning software:
The firmware version of all of the components on the "Version overview" page can be read in the Project Navigator under "Configuration" of the associated drive unit and an appropriate firmware update can be carried out.
Firmware update via parameter:
- take the component number from the alarm value and enter into p7828.
- start the firmware download with p7829 = 1.

A01007 POWER ON for DRIVE-CLiQ component required

Message value: Component number: %1

Drive object: All objects

Reaction: NONE

Acknowledge: NONE

Cause: A DRIVE-CLiQ component must be powered up again (POWER ON) (e.g. due to a firmware update).
Alarm value (r2124, interpret decimal):
Component number of the DRIVE-CLiQ component.
Note:
For a component number = 1, a POWER ON of the Control Unit is required.

Remedy: - Switch off the power supply of the specified DRIVE-CLiQ component and switch it on again.
- For SINUMERIK, auto commissioning is prevented. In this case, a POWER ON is required for all components and the auto commissioning must be restarted.

A01009 (N) CU: Control module overtemperature

Message value: -

Drive object: All objects

Reaction: NONE

Acknowledge: NONE

Cause: The temperature (r0037[0]) of the control module (Control Unit) has exceeded the specified limit value.

Remedy: - check the air intake for the Control Unit.
- check the Control Unit fan.
Note:
The alarm automatically disappears after the limit value has been undershot.

Reaction upon N: NONE

Acknowl. upon N: NONE

© Siemens AG 2012 All Rights Reserved

F01010 Drive type unknown

Message value: %1
Drive object: All objects
Reaction: NONE
Acknowledge: IMMEDIATELY
Cause: An unknown drive type was found.
Fault value (r0949, interpret decimal):
Drive object number (refer to p0101, p0107).
Remedy: - replace Power Module.
- carry out a POWER ON (power off/on) for all components.
- upgrade firmware to later version.
- contact the Hotline.

F01011 (N) Download interrupted

Message value: %1
Drive object: All objects
Reaction: NONE
Acknowledge: IMMEDIATELY
Cause: The project download was interrupted.
Fault value (r0949, interpret decimal):
1: The user prematurely interrupted the project download.
2: The communication cable was interrupted (e.g. cable breakage, cable withdrawn).
3: The project download was prematurely ended by the commissioning software (e.g. STARTER, SCOUT).
100: Different versions between the firmware version and project files which were loaded by loading into the file system "Download from card".
Note:
The response to an interrupted download is the state "first commissioning".
Remedy: - check the communication cable.
- download the project again.
- boot from previously saved files (power-down/power-up or p0976).
- when loading into the file system (download from card), use the matching version.
Reaction upon N: NONE
Acknowl. upon N: NONE

F01012 (N) Project conversion error

Message value: %1
Drive object: VECTOR_G
Reaction: OFF2 (NONE)
Acknowledge: IMMEDIATELY
Cause: When converting the project of an older firmware version, an error occurred.
Fault value (r0949, interpret decimal):
Parameter number of the parameter causing the error.
For fault value = 600, the following applies:
The temperature evaluation is no longer assigned to the power unit but to the encoder evaluation.
Notice:
Monitoring of the motor temperature is no longer ensured.
Remedy: Check the parameter indicated in the fault value and correctly adjust it accordingly.
For fault value = 600:
Parameter p0600 must be set to the values 1, 2 or 3 in accordance with the assignment of the internal encoder evaluation to the encoder interface.
Value 1 means: The internal encoder evaluation is assigned to the encoder interface 1 via p0187.
Value 2 means: The internal encoder evaluation is assigned to the encoder interface 2 via p0188.
Value 3 means: The internal encoder evaluation is assigned to the encoder interface 3 via p0189.
- If necessary, the internal encoder evaluation must be assigned to an encoder interface via parameters p0187, p0188 or p0189 accordingly.
- If necessary, upgrade the firmware to a later version.
Reaction upon N: NONE
Acknowl. upon N: NONE

© Siemens AG 2012 All Rights Reserved

F01015 Internal software error

Message value: %1
Drive object: All objects
Reaction: OFF2
Acknowledge: POWER ON
Cause: An internal software error has occurred.
Fault value (r0949, interpret decimal):
Only for internal Siemens troubleshooting.
Remedy: - carry out a POWER ON (power off/on) for all components.
- upgrade firmware to later version.
- contact the Hotline.

A01016 (F) Firmware changed

Message value: %1
Drive object: All objects
Reaction: NONE
Acknowledge: NONE
Cause: At least one firmware file in the directory was illegally changed on the non-volatile memory (memory card/device memory) with respect to the version when shipped from the factory.
Alarm value (r2124, interpret decimal):
0: Checksum of one file is incorrect.
1: File missing.
2: Too many files.
3: Incorrect firmware version.
4: Incorrect checksum of the back-up file.
Remedy: For the non-volatile memory for the firmware (memory card/device memory), restore the delivery condition.
Note:
The file involved can be read out using parameter r9925.
The status of the firmware check is displayed using r9926.
See also: r9925 (Firmware file incorrect), r9926 (Firmware check status)
Reaction upon F: OFF2
Acknowl. upon F: POWER ON

A01017 Component lists changed

Message value: %1
Drive object: All objects
Reaction: NONE
Acknowledge: NONE
Cause: On the memory card, one file in the directory /SIEMENS/SINAMICS/DATA or /ADDON/SINAMICS/DATA has been illegally changed with respect to that supplied from the factory. No changes are permitted in this directory.
Alarm value (r2124, interpret decimal):
zyx dec: x = Problem, y = Directory, z = File name
x = 1: File does not exist.
x = 2: Firmware version of the file does not match the software version.
x = 3: File checksum is incorrect.
y = 0: Directory /SIEMENS/SINAMICS/DATA/
y = 1: Directory /ADDON/SINAMICS/DATA/
z = 0: File MOTARM.ACX
z = 1: File MOTSRM.ACX
z = 2: File MOTSLM.ACX
z = 3: File ENCDATA.ACX
z = 4: File FILTDATA.ACX
z = 5: File BRKDATA.ACX
z = 6: File DAT_BEAR.ACX
z = 7: File CFG_BEAR.ACX
z = 8: File ENC_GEAR.ACX
Remedy: For the file on the memory card involved, restore the status originally supplied from the factory.

© Siemens AG 2012 All Rights Reserved

A01020 Writing to RAM disk unsuccessful

Message value: -
Drive object: All objects
Reaction: NONE
Acknowledge: NONE
Cause: A write access to the internal RAM disk was unsuccessful.
Remedy: Adapt the file size for the system logbook to the internal RAM disk (p9930).
See also: p9930 (System logbook activation)

F01023 Software timeout (internal)

Message value: %1
Drive object: All objects
Reaction: NONE
Acknowledge: IMMEDIATELY
Cause: An internal software timeout has occurred.
Fault value (r0949, interpret decimal):
Only for internal Siemens troubleshooting.
Remedy: - carry out a POWER ON (power off/on) for all components.
- upgrade firmware to later version.
- contact the Hotline.

F01030 Sign-of-life failure for master control

Message value: -
Drive object: B_INF, ENC, VECTOR_G
Reaction: Infeed: OFF1 (NONE, OFF2)
Vector: OFF3 (ENCODER, IASC/DCBRAKE, NONE, OFF1, OFF2, STOP1, STOP2)
Acknowledge: IMMEDIATELY
Cause: For active PC master control, no sign-of-life was received within the monitoring time.
The master control was returned to the active BICO interconnection.
Remedy: Set the monitoring time higher at the PC or, if required, completely disable the monitoring function.
For the commissioning software, the monitoring time is set as follows:
<Drive> -> Commissioning -> Control panel -> Button "Fetch master control" -> A window is displayed to set the monitoring time in milliseconds.
Notice:
The monitoring time should be set as short as possible. A long monitoring time means a late response when the communication fails!

F01031 Sign-of-life failure for OFF in REMOTE

Message value: -
Drive object: B_INF, VECTOR_G
Reaction: Infeed: OFF1 (NONE, OFF2)
Vector: OFF3 (ENCODER, IASC/DCBRAKE, NONE, OFF1, OFF2, STOP1, STOP2)
Acknowledge: IMMEDIATELY
Cause: With the "OFF in REMOTE" mode active, no sign-of-life was received within 3 seconds.
Remedy: - Check the data cable connection at the serial interface for the Control Unit (CU) and operator panel.
- Check the data cable between the Control Unit and operator panel.

A01032 (F) ACX: all parameters must be saved

Message value: %1
Drive object: All objects
Reaction: NONE
Acknowledge: NONE
Cause: The parameters of an individual drive object were saved (p0971 = 1), although there is still no backup of all drive system parameters.
The saved object-specific parameters are not loaded the next time that the system powers up.
For the system to successfully power up, all of the parameters must have been completely backed up.

© Siemens AG 2012 All Rights Reserved

Alarm value (r2124, interpret decimal):
Only for internal Siemens troubleshooting.
See also: p0971 (Save drive object parameters)

Remedy: Save all parameters (p0977 = 1 or "copy RAM to ROM").
See also: p0977 (Save all parameters)

Reaction upon F: Infeed: NONE (OFF1, OFF2)
Vector: NONE (OFF1, OFF2, OFF3)

Acknowl. upon F: IMMEDIATELY

F01033 Units changeover: Reference parameter value invalid

Message value: Parameter: %1

Drive object: B_INF, ENC, VECTOR_G

Reaction: NONE

Acknowledge: IMMEDIATELY

Cause: When changing over the units to the referred representation type, it is not permissible for any of the required reference parameters to be equal to 0.0
Fault value (r0949, parameter):
Reference parameter whose value is 0.0.
See also: p0349 (System of units, motor equivalent circuit diagram data), p0505 (Selecting the system of units), p0595 (Technological unit selection)

Remedy: Set the value of the reference parameter to a number different than 0.0.
See also: p0304, p0305, p0310, p0596, p2000, p2001, p2002, p2003, r2004

F01034 Units changeover: Calculation parameter values after reference value change unsuccessful

Message value: Parameter: %1

Drive object: B_INF, ENC, VECTOR_G

Reaction: NONE

Acknowledge: IMMEDIATELY

Cause: The change of a reference parameter meant that for an involved parameter the selected value was not able to be re-calculated in the per unit representation. The change was rejected and the original parameter value restored.
Fault value (r0949, parameter):
Parameter whose value was not able to be re-calculated.
See also: p0304, p0305, p0310, p0596, p2000, p2001, p2002, p2003, r2004

Remedy: Select the value of the reference parameter such that the parameter involved can be calculated in the per unit representation.
See also: p0304, p0305, p0310, p0596, p2000, p2001, p2002, p2003, r2004

A01035 (F) ACX: Parameter back-up file corrupted

Message value: %1

Drive object: All objects

Reaction: NONE

Acknowledge: NONE

Cause: When the Control Unit is booted, no complete data set was found from the parameter back-up files. The last time that the parameterization was saved, it was not completely carried out.
It is possible that the backup was interrupted by switching off or withdrawing the memory card.
Alarm value (r2124, interpret hexadecimal):
ddccbbaa hex:
aa = 01 hex:
Power up was realized without data backup. The drive is in the factory setting.
aa = 02 hex:
The last available backup data record was loaded. The parameterization must be checked. It is recommended that the parameterization is downloaded again.
dd, cc, bb:
Only for internal Siemens troubleshooting.
See also: p0971 (Save drive object parameters), p0977 (Save all parameters)

Remedy: - Download the project again with the commissioning software.
- save all parameters (p0977 = 1 or "copy RAM to ROM").
See also: p0977 (Save all parameters)

© Siemens AG 2012 All Rights Reserved

Reaction upon F: Infeed: NONE (OFF1, OFF2)
Vector: NONE (OFF1, OFF2, OFF3)
Acknowl. upon F: IMMEDIATELY

F01036 (A) ACX: Parameter back-up file missing

Message value: %1
Drive object: All objects
Reaction: Infeed: NONE (OFF2)
Vector: NONE (OFF1, OFF2, OFF3)
Acknowledge: IMMEDIATELY
Cause: When downloading the device parameterization, a parameter back-up file PSxxxyyy.ACX associated with a drive object cannot be found.
Fault value (r0949, interpret hexadecimal):
Byte 1: yyy in the file name PSxxxyyy.ACX
yyy = 000 --> consistency back-up file
yyy = 001 ... 062 --> drive object number
yyy = 099 --> PROFIBUS parameter back-up file
Byte 2, 3, 4:
Only for internal Siemens troubleshooting.
Remedy: If you have saved the project data using the commissioning software, carry out a new download for your project. Save using the function "Copy RAM to ROM" or with p0977 = 1 so that all of the parameter files are again completely written to the non-volatile memory.
If you have not saved the project data, then first commissioning of the system has to be carried out again.
Reaction upon A: NONE
Acknowl. upon A: NONE

F01038 (A) ACX: Loading the parameter back-up file unsuccessful

Message value: %1
Drive object: All objects
Reaction: Infeed: NONE (OFF2)
Vector: NONE (OFF1, OFF2, OFF3)
Acknowledge: IMMEDIATELY
Cause: An error has occurred when downloading PSxxxyyy.ACX or PTxxxyyy.ACX files from the non-volatile memory.
Fault value (r0949, interpret hexadecimal):
Byte 1: yyy in the file name PSxxxyyy.ACX
yyy = 000 --> consistency back-up file
yyy = 001 ... 062 --> drive object number
yyy = 099 --> PROFIBUS parameter back-up file
Byte 2:
255: Incorrect drive object type.
254: Topology comparison unsuccessful -> drive object type was not able to be identified.
Reasons could be:
- Incorrect component type in the actual topology
- Component does not exist in the actual topology.
- Component not active.
Additional values:
Only for internal Siemens troubleshooting.
Byte 4, 3:
Only for internal Siemens troubleshooting.
Remedy: - If you have saved the project data using the commissioning software, download the project again. Save using the function "Copy RAM to ROM" or with p0977 = 1 so that all of the parameter files are again completely written to the non-volatile memory.
- replace the memory card or Control Unit.
Re byte 2 = 255:
- Correct the drive object type (see p0107).
Reaction upon A: NONE
Acknowl. upon A: NONE

© Siemens AG 2012 All Rights Reserved

F01039 (A) ACX: Writing to the parameter back-up file was unsuccessful

Message value: %1

Drive object: All objects

Reaction: Infeed: NONE (OFF2)
Vector: NONE (OFF1, OFF2, OFF3)

Acknowledge: IMMEDIATELY

Cause: Writing to at least one parameter back-up file PSxxxyyy.*** in the non-volatile memory was unsuccessful.
- In the directory /USER/SINAMICS/DATA/ at least one parameter back-up file PSxxxyyy.*** has the "read only" file attribute and cannot be overwritten.
- There is not sufficient free memory space available.
- The non-volatile memory is defective and cannot be written to.
Fault value (r0949, interpret hexadecimal):
dcba hex
a = yyy in the file names PSxxxyyy.***
a = 000 --> consistency back-up file
a = 001 ... 062 --> drive object number
a = 070 --> FEPROM.BIN
a = 080 --> DEL4BOOT.TXT
a = 099 --> PROFIBUS parameter back-up file
b = xxx in the file names PSxxxyyy.***
b = 000 --> data save started with p0977 = 1 or p0971 = 1
b = 010 --> data save started with p0977 = 10
b = 011 --> data save started with p0977 = 11
b = 012 --> data save started with p0977 = 12
d, c:
Only for internal Siemens troubleshooting.

Remedy: - check the file attribute of the files (PSxxxyyy.***, CAxxxyyy.***, CCxxxyyy.***) and, if required, change from "read only" to "writeable".
- check the free memory space in the non-volatile memory. Approx. 80 kbyte of free memory space is required for every drive object in the system.
- replace the memory card or Control Unit.

Reaction upon A: NONE

Acknowl. upon A: NONE

F01040 Save parameter settings and carry out a POWER ON

Message value: -

Drive object: B_INF, CU_G130_DP, CU_G130_PN, CU_G150_DP, CU_G150_PN, ENC, HUB, TB30, TM150, TM31, TM54F_MA, TM54F_SL

Reaction: OFF2

Acknowledge: POWER ON

Cause: A parameter was changed in the drive system which means that it is necessary to save the parameters and re-boot.

Remedy: - save the parameters (p0971/p0977).
- carry out a POWER ON (power off/on) for all components.
Then:
- upload the drive unit (commissioning software).

F01040 Save parameter settings and carry out a POWER ON

Message value: -

Drive object: VECTOR_G

Reaction: OFF2

Acknowledge: POWER ON

Cause: A parameter was changed in the drive system which means that it is necessary to save the parameters and re-boot.
Examples:
- p1810.2 (wobulation of the pulse frequency) and p1802 (edge modulation)
- p1750.5 (cl.-loop control mode PESM up to f=0Hz with HF signal injection)

© Siemens AG 2012 All Rights Reserved

Remedy: - save the parameters (p0971/p0977).
- carry out a POWER ON for all components (switch-on the Control Unit with or after the power units).
When changing p1750.5 or p1810.2 for edge modulation, a warm restart is sufficient (p0009 = 30, p0976 = 3).
Then:
- upload the drive unit (commissioning software).

F01041 Parameter save necessary

Message value: %1

Drive object: All objects

Reaction: NONE

Acknowledge: IMMEDIATELY

Cause: Defective or missing files were detected on the memory card when booting.
Fault value (r0949, interpret decimal):
1: Source file cannot be opened.
2: Source file cannot be read.
3: Target directory cannot be set up.
4. Target file cannot be set up/opened.
5. Target file cannot be written to.
Additional values:
Only for internal Siemens troubleshooting.

Remedy: - save the parameters.
- download the project again to the drive unit.
- update the firmware
- if required, replace the Control Unit and/or memory card card.

F01042 Parameter error during project download

Message value: Parameter: %1, Index: %2, fault cause: %3

Drive object: All objects

Reaction: Infeed: OFF2 (NONE, OFF1)
Vector: OFF2 (NONE, OFF1, OFF3)

Acknowledge: IMMEDIATELY

Cause: An error was detected when downloading a project using the commissioning software (e.g. incorrect parameter value).
For the specified parameter, it was detected that dynamic limits were exceeded that may possibly depend on other parameters.
Fault value (r0949, interpret hexadecimal):
ccbbaaaa hex
aaaa = Parameter
bb = Index
cc = fault cause
0: Parameter number illegal.
1: Parameter value cannot be changed.
2: Lower or upper value limit exceeded.
3: Sub-index incorrect.
4: No array, no sub-index.
5: Data type incorrect.
6: Setting not permitted (only resetting).
7: Descriptive element cannot be changed.
9: Descriptive data not available.
11: No master control.
15: No text array available.
17: Task cannot be executed due to operating state.
20: Illegal value.
21: Response too long.
22: Parameter address illegal.
23: Format illegal.
24: Number of values not consistent.
25: Drive object does not exist.
101: Presently de-activated.
104: Illegal value.
107: Write access not permitted when controller enabled.

© Siemens AG 2012 All Rights Reserved

108: Unit unknown.
109: Write access only in the commissioning state, encoder (p0010 = 4).
110: Write access only in the commissioning state, motor (p0010 = 3).
111: Write access only in the commissioning state, power unit (p0010 = 2).
112: Write access only in the quick commissioning mode (p0010 = 1).
113: Write access only in the ready mode (p0010 = 0).
114: Write access only in the commissioning state, parameter reset (p0010 = 30).
115: Write access only in the Safety Integrated commissioning state (p0010 = 95).
116: Write access only in the commissioning state, technological application/units (p0010 = 5).
117: Write access only in the commissioning state (p0010 not equal to 0).
118: Write access only in the commissioning state, download (p0010 = 29).
119: Parameter may not be written in download.
120: Write access only in the commissioning state, drive basic configuration (device: p0009 = 3).
121: Write access only in the commissioning state, define drive type (device: p0009 = 2).
122: Write access only in the commissioning state, data set basic configuration (device: p0009 = 4).
123: Write access only in the commissioning state, device configuration (device: p0009 = 1).
124: Write access only in the commissioning state, device download (device: p0009 = 29).
125: Write access only in the commissioning state, device parameter reset (device: p0009 = 30).
126: Write access only in the commissioning state, device ready (device: p0009 = 0).
127: Write access only in the commissioning state, device (device: p0009 not equal to 0).
129: Parameter may not be written in download.
130: Transfer of the master control is inhibited via binector input p0806.
131: Required BICO interconnection not possible because BICO output does not supply floating value
132: Free BICO interconnection inhibited via p0922.
133: Access method not defined.
200: Below the valid values.
201: Above the valid values.
202: Cannot be accessed from the Basic Operator Panel (BOP).
203: Cannot be read from the Basic Operator Panel (BOP).
204: Write access not permitted.

Remedy: - enter the correct value in the specified parameter.
- identify the parameter that restricts the limits of the specified parameter.

F01043 Fatal error at project download

Message value: Fault cause: %1

Drive object: All objects

Reaction: Infeed: OFF2 (OFF1)
Vector: OFF2 (OFF1, OFF3)

Acknowledge: IMMEDIATELY

Cause: A fatal error was detected when downloading a project using the commissioning software.
Fault value (r0949, interpret decimal):
1: Device status cannot be changed to Device Download (drive object ON?).
2: Incorrect drive object number.
3: A drive object that has already been deleted is deleted again.
4: Deleting of a drive object that has already been registered for generation.
5: Deleting a drive object that does not exist.
6: Generating an undeleted drive object that already existed.
7: Regenerating a drive object already registered for generation.
8: Maximum number of drive objects that can be generated exceeded.
9: Error while generating a device drive object.
10: Error while generating target topology parameters (p9902 and p9903).
11: Error while generating a drive object (global component).
12: Error while generating a drive object (drive component).
13: Unknown drive object type.
14: Drive status cannot be changed to "ready for operation" (p0947 and p0949).
15: Drive status cannot be changed to drive download.
16: Device status cannot be changed to "ready for operation".
17: It is not possible to download the topology. The component wiring should be checked, taking into account the various messages/signals.
18: A new download is only possible if the factory settings are restored for the drive unit.
19: The slot for the option module has been configured several times (e.g. CAN and COMM BOARD)

© Siemens AG 2012 All Rights Reserved

20: The configuration is inconsistent (e.g. CAN for Control Unit, however no CAN configured for drive objects A_INF, SERVO or VECTOR).
21: Error when accepting the download parameters.
22: Software-internal download error.
Additional values: only for internal Siemens troubleshooting.

Remedy: - use the current version of the commissioning software.
- modify the offline project and carry out a new download (e.g. compare the number of drive objects, motor, encoder, power unit in the offline project and at the drive).
- change the drive state (is a drive rotating or is there a message/signal?).
- carefully note any other messages/signals and remove their cause.
- boot from previously saved files (power-down/power-up or p0976).

F01044 CU: Descriptive data error

Message value: %1
Drive object: All objects
Reaction: OFF2
Acknowledge: POWER ON
Cause: An error was detected when loading the descriptive data saved in the non-volatile memory.
Remedy: Replace the memory card or Control Unit.

A01045 CU: Configuring data invalid

Message value: %1
Drive object: All objects
Reaction: NONE
Acknowledge: NONE
Cause: An error was detected when evaluating the parameter files PSxxxyyy.ACX, PTxxxyyy.ACX, CAxxxyyy.ACX, or CCxxxyyy.ACX saved in the non-volatile memory. Because of this, under certain circumstances, several of the saved parameter values were not able to be accepted. Also see r9406 up to r9408.
Alarm value (r2124, interpret hexadecimal):
Only for internal Siemens troubleshooting.
Remedy: - Check the parameters displayed in r9406 up to r9408, and correct these if required.
- Restore the factory setting using (p0976 = 1) and re-load the project into the drive unit.
Then save the parameterization in STARTER using the "Copy RAM to ROM" function or with p0977 = 1. This overwrites the incorrect parameter files in the non-volatile memory – and the alarm is withdrawn.

A01049 CU: It is not possible to write to file

Message value: %1
Drive object: All objects
Reaction: NONE
Acknowledge: NONE
Cause: It is not possible to write into a write-protected file (PSxxxxxx.acx). The write request was interrupted.
Alarm value (r2124, interpret decimal):
Drive object number.
Remedy: Check whether the "write protected" attribute has been set for the files in the non-volatile memory under .../USER/SINAMICS/DATA/...
When required, remove write protection and save again (e.g. set p0977 to 1).

F01050 Memory card and device incompatible

Message value: -
Drive object: All objects
Reaction: Infeed: OFF2 (NONE, OFF1)
Vector: OFF2 (NONE, OFF1, OFF3)
Acknowledge: IMMEDIATELY
Cause: The memory card and the device type do not match (e.g. a memory card for SINAMICS S is inserted in SINAMICS G).
Remedy: - insert the matching memory card.
- use the matching Control Unit or power unit.

© Siemens AG 2012 All Rights Reserved

F01054 CU: System limit exceeded

Message value: %1

Drive object: All objects

Reaction: OFF2

Acknowledge: IMMEDIATELY

Cause: At least one system overload has been identified.
Fault value (r0949, interpret decimal):
1: Computing time load too high (r9976[1]).
5: Peak load too high (r9976[5]).
See also: r9976 (System utilization)

Remedy: Re fault value = 1, 5:
- reduce the computing time load of the drive unit (r9976[1] and r9976[5]) to under 100 %.
- check the sampling times and adjust if necessary (p0115, p0799, p4099).
- de-activate function modules.
- de-activate drive objects.
- remove drive objects from the target topology.
- note the DRIVE-CLiQ topology rules and if required, change the DRIVE-CLiQ topology.
When using the Drive Control Chart (DCC) or free function blocks (FBLOCKS), the following applies
- the computing time load of the individual run-time groups on a drive object can be read out in r21005 (DCC) or r20005 (FBLOCKS).
- if necessary, the assignment of the run-time group (p21000, p20000) can be changed in order to increase the sampling time (r21001, r20001).
- if necessary, reduce the number of cyclically calculated blocks (DCC) and/or function blocks (FBLOCKS).

F01055 CU: Internal error (SYNO of port and application not identical)

Message value: %1

Drive object: B_INF, TM150, VECTOR_G

Reaction: NONE

Acknowledge: IMMEDIATELY

Cause: All applications that operate with slaves at one port must be derived from the same SYNO clock cycle.
The first application whose registration (log-on) connects a slave to a port defines the SYNO clock cycle that will be used as basis for the port.
Fault value (r0949, interpret hexadecimal):
Method ID.
Note:
Only for internal Siemens troubleshooting.

Remedy: Contact the Hotline.

F01056 CU: Internal error (clock cycle of parameter group already assigned differently)

Message value: %1

Drive object: B_INF, TM150, VECTOR_G

Reaction: NONE

Acknowledge: IMMEDIATELY

Cause: The requested parameter group (IREG, NREG, ...) is already being used in a different clock cycle.
Fault value (r0949, interpret hexadecimal):
Method ID.
Note:
Only for internal Siemens troubleshooting.

Remedy: Contact the Hotline.

F01057 CU: Internal error (different DRIVE-CLiQ type for the slave)

Message value: %1

Drive object: B_INF, TM150, VECTOR_G

Reaction: NONE

Acknowledge: IMMEDIATELY

Cause: The requested DRIVE-CLiQ type (hps_ps, hps_enc, ...) has been specified differently for the same slave component.
Fault value (r0949, interpret hexadecimal):
Method ID.

© Siemens AG 2012 All Rights Reserved

Note:
Only for internal Siemens troubleshooting.

Remedy: Contact the Hotline.

F01058 CU: Internal error (slave missing in topology)

Message value: %1

Drive object: B_INF, TM150, VECTOR_G

Reaction: NONE

Acknowledge: IMMEDIATELY

Cause: The requested slave component does not exist in the topology.
Fault value (r0949, interpret hexadecimal):
Method ID.
Note:
Only for internal Siemens troubleshooting.

Remedy: Contact the Hotline.

F01059 CU: Internal error (port does not exist)

Message value: %1

Drive object: B_INF, TM150, VECTOR_G

Reaction: NONE

Acknowledge: IMMEDIATELY

Cause: The port object assigned according to the topology of the requested slave component does not exist.
Fault value (r0949, interpret hexadecimal):
Method ID.
Note:
Only for internal Siemens troubleshooting.

Remedy: Contact the Hotline.

F01060 CU: Internal error (parameter group not available)

Message value: %1

Drive object: B_INF, TM150, VECTOR_G

Reaction: NONE

Acknowledge: IMMEDIATELY

Cause: The requested parameter group (IREG, NREG, ...) is not offered by this slave type.
Fault value (r0949, interpret hexadecimal):
Method ID.
Note:
Only for internal Siemens troubleshooting.

Remedy: Contact the Hotline.

F01061 CU: Internal error (application not known)

Message value: %1

Drive object: B_INF, TM150, VECTOR_G

Reaction: NONE

Acknowledge: IMMEDIATELY

Cause: An application that is not registered with TSM has attempted to register with registerSlaves().
The cause can be an unsuccessful TSM registration or an incorrect registration sequence. It is always necessary to log in to the TSM before registerSlaves() can be used.
Fault value (r0949, interpret hexadecimal):
Method ID.
Note:
Only for internal Siemens troubleshooting.

Remedy: Contact the Hotline.

© Siemens AG 2012 All Rights Reserved

F01063 CU: Internal error (PDM)

Message value: %1
Drive object: B_INF, TM150, VECTOR_G
Reaction: NONE
Acknowledge: IMMEDIATELY
Cause: An internal software error has occurred.
Fault value (r0949, interpret hexadecimal):
Method ID.
Note:
Only for internal Siemens troubleshooting.
Remedy: Contact the Hotline.

A01064 (F) CU: Internal error (CRC)

Message value: -
Drive object: All objects
Reaction: NONE
Acknowledge: NONE
Cause: CRC error in the Control Unit program memory
Remedy: - carry out a POWER ON (power off/on) for all components.
- upgrade firmware to later version.
- contact the Hotline.
Reaction upon F: Infeed: NONE (OFF1, OFF2)
Vector: NONE (OFF1, OFF2, OFF3, STOP2)
Acknowl. upon F: IMMEDIATELY (POWER ON)

F01068 CU: Data memory, memory overflow

Message value: %1
Drive object: All objects
Reaction: OFF2
Acknowledge: IMMEDIATELY
Cause: The utilization for a data memory area is too large.
Fault value (r0949, interpret binary):
Bit 0 = 1: High-speed data memory 1 overloaded
Bit 1 = 1: High-speed data memory 2 overloaded
Bit 2 = 1: High-speed data memory 3 overloaded
Bit 3 = 1: High-speed data memory 4 overloaded
Remedy: - de-activate the function module.
- de-activate drive object.
- remove the drive object from the target topology.

A01069 Parameter backup and device incompatible

Message value: -
Drive object: All objects
Reaction: NONE
Acknowledge: NONE
Cause: The parameter backup on the memory card and the drive unit do not match.
The module boots with the factory settings.
Example:
Devices A and B. are not compatible and a memory card with the parameter backup for device A is inserted in device B.
Remedy: - insert a memory card with compatible parameter backup and carry out a POWER ON.
- insert a memory card without parameter backup and carry out a POWER ON.
- save the parameters (p0977 = 1).

© Siemens AG 2012 All Rights Reserved

F01070 Project/firmware is being downloaded to the memory card

Message value: %1

Drive object: All objects

Reaction: OFF2

Acknowledge: IMMEDIATELY

Cause: An upgrade (project/firmware download) was initiated on the memory card.
While this fault is present, the corresponding update takes place with plausibility and consistency checks. After this, depending on the command option, a new boot (reset) for the Control Unit is initiated.
Caution:
During the upgrade and while this fault is present, it is not permissible to switch off the Control Unit.
If the operation is interrupted, this can destroy the file system on the memory card. The memory card will then no longer work properly and must be repaired.

Remedy: Not necessary.
The fault automatically disappears after the upgrade has been completed.

A01099 Tolerance window of time synchronization exited

Message value: -

Drive object: All objects

Reaction: NONE

Acknowledge: NONE

Cause: The time master exited the selected tolerance window for time synchronization.
See also: p3109 (RTC real time synchronization, tolerance window)

Remedy: Select the re-synchronization interval so that the synchronization deviation between the time master and drive system lies within the tolerance window.
See also: r3108 (RTC last synchronization deviation)

A01100 CU: Memory card withdrawn

Message value: -

Drive object: B_INF, VECTOR_G

Reaction: NONE

Acknowledge: NONE

Cause: The memory card (non-volatile memory) was withdrawn during operation.
Notice:
It is not permissible for the memory card to be withdrawn or inserted under voltage.

Remedy: - power down the drive system.
- re-insert the memory card that was withdrawn - this card must match the drive system.
- power up the drive system again.

F01105 (A) CU: Insufficient memory

Message value: %1

Drive object: All objects

Reaction: OFF1

Acknowledge: POWER ON

Cause: Too many functions have been configured on this Control Unit (e.g. too many drives, function modules, data sets, OA applications, blocks, etc).
Fault value (r0949, interpret decimal):
Only for internal Siemens troubleshooting.

Remedy: - change the configuration on this Control Unit (e.g. fewer drives, function modules, data sets, OA applications, blocks, etc).
- use an additional Control Unit.

Reaction upon A: NONE

Acknowl. upon A: NONE

© Siemens AG 2012 All Rights Reserved

F01106 CU: Insufficient memory

Message value: %1
Drive object: B_INF, TM150, VECTOR_G
Reaction: NONE
Acknowledge: IMMEDIATELY
Cause: There is not sufficient free memory space available.
Remedy: Not necessary.

F01107 CU: Data save in the non-volatile memory unsuccessful

Message value: %1
Drive object: All objects
Reaction: NONE
Acknowledge: IMMEDIATELY
Cause: A data save in the non-volatile memory was not able to be successfully carried out.
- non-volatile memory is defective.
- insufficient space in the non-volatile memory.
Fault value (r0949, interpret decimal):
Only for internal Siemens troubleshooting.

Remedy: - try to save again.
- replace the memory card or Control Unit.

F01110 CU: More than one SINAMICS G on one Control Unit

Message value: %1
Drive object: All objects
Reaction: NONE
Acknowledge: IMMEDIATELY
Cause: More than one SINAMICS G type power unit is being operated from the Control Unit.
Fault value (r0949, interpret decimal):
Number of the second drive with a SINAMICS G type power unit.

Remedy: Only one SINAMICS G drive type is permitted.

F01111 CU: Mixed operation of drive units illegal

Message value: %1
Drive object: All objects
Reaction: NONE
Acknowledge: IMMEDIATELY
Cause: Illegal operation of various drive units on one Control Unit:
- SINAMICS S together with SINAMICS G
- SINAMICS S together with SINAMICS S Value or Combi
Fault value (r0949, interpret decimal):
Number of the first drive object with a different power unit type.

Remedy: Only power units of one particular drive type may be operated with one Control Unit.

F01112 CU: Power unit not permissible

Message value: %1
Drive object: All objects
Reaction: NONE
Acknowledge: IMMEDIATELY
Cause: The connected power unit cannot be used together with this Control Unit.
Fault value (r0949, interpret decimal):
1: Power unit is not supported (e.g. PM240).
2: DC/AC power unit connected to CU310 not permissible.
3: Power unit (S120M) not permitted for vector control.

Remedy: Replace the power unit that is not permissible by a component that is permissible.

© Siemens AG 2012 All Rights Reserved

F01120 (A) Terminal initialization has failed

Message value: %1
Drive object: All objects
Reaction: OFF1 (OFF2)
Acknowledge: IMMEDIATELY (POWER ON)
Cause: An internal software error occurred while the terminal functions were being initialized.
Fault value (r0949, interpret hexadecimal):
Only for internal Siemens troubleshooting.
Remedy: - carry out a POWER ON (power off/on) for all components.
- upgrade firmware to later version.
- contact the Hotline.
- replace the Control Unit.
Reaction upon A: NONE
Acknowl. upon A: NONE

F01122 (A) Frequency at the measuring probe input too high

Message value: %1
Drive object: All objects
Reaction: OFF1 (OFF2)
Acknowledge: IMMEDIATELY
Cause: The frequency of the pulses at the measuring probe input is too high.
Fault value (r0949, interpret decimal):
1: DI/DO 9 (X122.8)
2: DI/DO 10 (X122.10)
4: DI/DO 11 (X122.11)
8: DI/DO 13 (X132.8)
16: DI/DO 14 (X132.10)
32: DI/DO 15 (X132.11)
64: DI/DO 8 (X122.7)
128: DI/DO 12 (X132.7)
Remedy: Reduce the frequency of the pulses at the measuring probe input.
Reaction upon A: NONE
Acknowl. upon A: NONE

F01150 CU: Number of instances of a drive object type exceeded

Message value: Drive object type: %1, number permitted: %2, actual number: %3
Drive object: All objects
Reaction: NONE
Acknowledge: IMMEDIATELY
Cause: The maximum permissible number of instances of a drive object type was exceeded.
Drive object type:
Drive object type (p0107), for which the maximum permissible number of instances was exceeded.
Number permitted:
Max. permissible number of instances for this drive object type.
Actual number:
Current number of instances for this drive object type.
Note regarding the message value:
The individual information is coded as follows in the message value (r0949/r2124):
ddccbbaa hex: aa = drive object type, bb = number limited, cc = actual number, dd = no significance
Remedy: - power down the unit.
- suitably restrict the number of instances of a drive object type by reducing the number of inserted components.
- re-commission the unit.

© Siemens AG 2012 All Rights Reserved

F01151 CU: Number of drive objects of a category exceeded

Message value: Drive object category: %1, number permitted: %2, actual number: %3

Drive object: All objects

Reaction: NONE

Acknowledge: IMMEDIATELY

Cause: The maximum permissible number of drive objects of a category was exceeded.
Drive object category:
Drive object category, for which the maximum permissible number of drive objects was exceeded.
Number permitted:
Max. permissible number for this drive object category.
Actual number:
Actual number for this drive object category.
Note regarding the message value:
The individual information is coded as follows in the message value (r0949/r2124):
ddccbbaa hex: aa = drive object category, bb = number limited, cc = actual number, dd = no significance

Remedy: - power down the unit.
- suitably restrict the number of drive objects of the specified category by reducing the number of inserted components.
- re-commission the unit.

F01200 CU: Time slice management internal software error

Message value: %1

Drive object: All objects

Reaction: OFF2

Acknowledge: IMMEDIATELY (POWER ON)

Cause: A time slice management error has occurred.
It is possible that the sampling times have been inadmissibly set.
Fault value (r0949, interpret hexadecimal):
998:
Too many time slices occupied by OA (e.g. DCC).
999:
Too many time slices occupied by the basic system. Too many different sampling times may have been set.
Additional values:
Only for internal Siemens troubleshooting.

Remedy: - check the sampling time setting (p0112, p0115, p4099, p9500, p9511).
- contact the Hotline.

F01205 CU: Time slice overflow

Message value: %1

Drive object: All objects

Reaction: OFF2

Acknowledge: POWER ON

Cause: Insufficient processing time is available for the existing topology.
Fault value (r0949, interpret hexadecimal):
Only for internal Siemens troubleshooting.

Remedy: - reduce the number of drives.
- increase the sampling times.

F01221 CU: Bas clk cyc too low

Message value: %1

Drive object: All objects

Reaction: NONE

Acknowledge: IMMEDIATELY

Cause: The closed-loop control / monitoring cannot maintain the envisaged clock cycle.
The runtime of the closed-loop control/monitoring is too long for the particular clock cycle or the computing time remaining in the system is not sufficient for the closed-loop control/monitoring.
Fault value (r0949, interpret hexadecimal):
Only for internal Siemens troubleshooting.

© Siemens AG 2012 All Rights Reserved

Remedy: Increase the basic clock cycle of DRIVE-CLiQ communication.
See also: p0112 (Sampling times pre-setting p0115)

F01222 CU: Basic clock cycle too low (computing time for communication not available)

Message value: %1
Drive object: B_INF, TM150, VECTOR_G
Reaction: NONE
Acknowledge: IMMEDIATELY
Cause: A time slice has not been defined that fulfills the requirements.
The port cannot be correctly operated as the alternating cyclic clock cycle cannot be maintained.
Fault value (r0949, interpret hexadecimal):
Method ID.
Note:
Only for internal Siemens troubleshooting.
Remedy: Contact the Hotline.

A01223 CU: Sampling time inconsistent

Message value: %1
Drive object: All objects
Reaction: NONE
Acknowledge: NONE
Cause: When changing a sampling time (p0115[0], p0799 or p4099), inconsistency between the clock cycles has been identified.
Alarm value (r2124, interpret decimal):
1: Value lower than minimum value.
2: Value higher than maximum value.
3: Value not a multiple of 1.25 µs.
4: Value does not match clock-cycle synchronous PROFIBUS operation.
5: Value not a multiple of 125 µs.
6: Value not a multiple of 250 µs.
7: Value not a multiple of 375 µs.
8: Value not a multiple of 400 µs.
10: Special restriction of the drive object violated.
20: On a SERVO with a sampling time of 62.5 µs, more than two drive objects or one drive object of a type other than SERVO have been detected on the same DRIVE-CLiQ line (a maximum of two SERVO type drive objects are permitted).
21: Value can be a multiple of the current controller sampling time of a servo or vector drive in the system (e.g. for TB30, the values of all of the indices should be taken into account).
30: Value less than 31.25 µs.
31: Value less than 62.5 µs (31.25 µs is not supported for SMC10, SMC30, SMI10 and Double Motor Modules).
32: Value less than 125 µs.
33: Value less than 250 µs.
40: Nodes have been identified on the DRIVE-CLiQ line whose highest common denominator of the sampling times is less than 125 µs. Further, none of the nodes has a sampling time of less than 125 µs.
41: A chassis unit was identified on the DRIVE-CLiQ line as a node. Further, the highest common denominator of the sampling times of all of the nodes connected to the line is less than 250 µs.
42: An Active Line Module was identified on the DRIVE-CLiQ line as a node. Further, the highest common denominator of the sampling times of all of the nodes connected to the line is less than 125 µs.
43: A Voltage Sensing Module (VSM) was identified on the DRIVE-CLiQ line as a node. Further, the highest common denominator of the sampling times of all of the nodes connected to the line is not equal to the current controller sampling time of the drive object of the VSM.
44: The highest common denominator of the sampling times of all of the components connected to the DRIVE-CLiQ line is not the same for all components of this drive object (e.g. there are components on different DRIVE-CLiQ lines on which different highest common denominators are generated).
45: A chassis parallel unit was identified on the DRIVE-CLiQ line as a node. Further, the highest common denominator of the sampling times of all of the nodes connected to the line is less than 162.5 µs or 187.5 µs (for a 2 or 3x parallel connection).
46: A node has been identified on the DRIVE-CLiQ line whose sampling time is not a multiple of the lowest sampling time on this line.
52: Nodes have been identified on the DRIVE-CLiQ line whose highest common denominator of the sampling times is less than 31.25 µs.

© Siemens AG 2012 All Rights Reserved

54: Nodes have been identified on the DRIVE-CLiQ line whose highest common denominator of the sampling times is less than 62.5 µs.
56: Nodes have been identified on the DRIVE-CLiQ line whose highest common denominator of the sampling times is less than 125 µs.
58: Nodes have been identified on the DRIVE-CLiQ line whose highest common denominator of the sampling times is less than 250 µs.
99: Inconsistency of cross drive objects detected.
116: Recommended clock cycle in r0116[0...1].
General note:
The topology rules should be noted when connecting up DRIVE-CLiQ (refer to the appropriate product documentation).
The parameters of the sampling times can also be changed with automatic calculations.
Example for highest common denominator: 125 µs, 125 µs, 62.5 µs --> 62.5 µs

Remedy: - check the DRIVE-CLiQ cables.
- set a valid sampling time.
See also: p0115, p0799, p4099

A01224 CU: Pulse frequency inconsistent

Message value: %1

Drive object: All objects

Reaction: NONE

Acknowledge: NONE

Cause: When changing the minimum pulse frequency (p0113) inconsistency between the pulse frequencies was identified.
Alarm value (r2124, interpret decimal):
1: Value lower than minimum value.
2: Value higher than maximum value.
3: Resulting sampling time is not a multiple of 1.25 µs.
4: Value does not match clock-cycle synchronous PROFIBUS operation.
10: Special restriction of the drive object violated.
99: Inconsistency of cross drive objects detected.
116: Recommended clock cycle in r0116[0...1].

Remedy: Set a valid pulse frequency.
See also: p0113 (Minimum pulse frequency, selection)

F01250 CU: CU-EEPROM incorrect read-only data

Message value: %1

Drive object: All objects

Reaction: NONE (OFF2)

Acknowledge: POWER ON

Cause: Error when reading the read-only data of the EEPROM in the Control Unit.
Fault value (r0949, interpret decimal):
Only for internal Siemens troubleshooting.

Remedy: - carry out a POWER ON.
- replace the Control Unit.

A01251 CU: CU-EEPROM incorrect read-write data

Message value: %1

Drive object: All objects

Reaction: NONE

Acknowledge: NONE

Cause: Error when reading the read-write data of the EEPROM in the Control Unit.
Alarm value (r2124, interpret decimal):
Only for internal Siemens troubleshooting.

Remedy: For alarm value r2124 < 256, the following applies:
- carry out a POWER ON.
- replace the Control Unit.
For alarm value r2124 >= 256, the following applies:
- for the drive object with this alarm, clear the fault memory (p0952 = 0).

© Siemens AG 2012 All Rights Reserved

- as an alternative, clear the fault memory of all drive objects (p2147 = 1).
- replace the Control Unit.

F01255 CU: Option Board EEPROM read-only data error

Message value: %1

Drive object: All objects

Reaction: NONE (OFF2)

Acknowledge: POWER ON

Cause: Error when reading the read-only data of the EEPROM in the Option Board.
Fault value (r0949, interpret decimal):
Only for internal Siemens troubleshooting.

Remedy:
- carry out a POWER ON.
- replace the Control Unit.

A01256 CU: Option Board EEPROM read-write data error

Message value: %1

Drive object: All objects

Reaction: NONE

Acknowledge: NONE

Cause: Error when reading the read-write data of the EEPROM in the Option Board.
Fault value (r0949, interpret decimal):
Only for internal Siemens troubleshooting.

Remedy:
- carry out a POWER ON.
- replace the Control Unit.

F01303 DRIVE-CLiQ component does not support the required function

Message value: %1

Drive object: All objects

Reaction: OFF2

Acknowledge: IMMEDIATELY

Cause: A function requested by the Control Unit is not supported by a DRIVE-CLiQ component.
Fault value (r0949, interpret decimal):
1: The component does not support the de-activation.
101: The Motor Module does not support an internal armature short-circuit.
102: The Motor Module does not support the de-activation.
201: The Sensor Module does not support actual value inversion (p0410.0 = 1) when using a Hall sensor (p0404.6 = 1) for the commutation.
202: The Sensor Module does not support parking/unparking.
203: The Sensor Module does not support the de-activation.
204: The firmware of this Terminal Module 15 (TM15) does not support the application TM15DI/DO.
205: The Sensor Module does not support the selected temperature evaluation (r0458).
206: The firmware of this Terminal Modules TM41/TM31/TM15 refers to an old firmware version. It is urgently necessary to upgrade the firmware to ensure disturbance-free operation.
207: The power unit with this hardware version does not support operation with device supply voltages of less than 380 V.
208: The Sensor Module does not support de-selection of commutation with zero mark (via p0430.23).
211: The Sensor Module does not support single-track encoders (r0459.10).
212: The Sensor Module does not support LVDT sensors (p4677.0).
213: The Sensor Module does not support the characteristic type (p4662).

Remedy: Upgrade the firmware of the DRIVE-CLiQ component involved.
For fault value = 205:
Check parameter p0600 and p0601 and if required, adapt interpretation.
For fault value = 207:
Replace the power unit or if required set the device supply voltage higher (p0210).
For fault value = 208:
Check parameter p0430.23 and reset if necessary.

© Siemens AG 2012 All Rights Reserved

A01304 (F) Firmware version of DRIVE-CLiQ component is not up-to-date

Message value: %1
Drive object: All objects
Reaction: NONE
Acknowledge: NONE
Cause: The non-volatile memory has a more recent firmware version than the one in the connected DRIVE-CLiQ component.
Alarm value (r2124, interpret decimal):
Component number of the DRIVE-CLiQ component involved.
Remedy: Update the firmware (p7828, p7829 and commissioning software).
Reaction upon F: NONE
Acknowl. upon F: IMMEDIATELY

F01305 Topology: Component number missing

Message value: %1
Drive object: All objects
Reaction: NONE
Acknowledge: IMMEDIATELY
Cause: The component number from the topology was not parameterized (p0121 (for power unit, refer to p0107), p0131 (for servo/vector drives, refer to p0107), p0141, p0151, p0161).
Fault value (r0949, interpret decimal):
Data set number.
Note:
The fault also occurs if speed encoders have been configured (p0187 to p0189) but no component numbers exist for them.
In this case, the fault value includes the drive data set number plus 100 * encoder number (e.g. 3xx, if a component number was not entered in p0141 for the third encoder (p0189)).
See also: p0121, p0131, p0141, p0142, p0151, p0161, p0186, p0187, p0188, p0189
Remedy: Enter the missing component number or remove the component and restart commissioning.
See also: p0121, p0131, p0141, p0142, p0151, p0161, p0186, p0187, p0188, p0189

A01306 Firmware of the DRIVE-CLiQ component being updated

Message value: %1
Drive object: All objects
Reaction: NONE
Acknowledge: NONE
Cause: Firmware update is active for at least one DRIVE-CLiQ component.
Alarm value (r2124, interpret decimal):
Component number of the DRIVE-CLiQ component.
Remedy: Not necessary.
This alarm automatically disappears after the firmware has been updated.

A01314 Topology: Component must not be present

Message value: Component number: %1, Component class: %2, Connection number: %3
Drive object: All objects
Reaction: NONE
Acknowledge: NONE
Cause: For a component, "de-activate and not present" is set but this component is still in the topology.
Alarm value (r2124, interpret hexadecimal):
ddccbbaa hex:
aa = component number
bb = component class of the component
cc = connection number
Note:
Component class and connection number are described in F01375.

© Siemens AG 2012 All Rights Reserved

Remedy: - remove the corresponding component.
- change the setting "de-activate and not present".
Note:
Under "Topology --> Topology view" the commissioning software where relevant offers improved diagnostics capability (e.g. setpoint/actual value comparison).
See also: p0105, p0125, p0145, p0155

A01315 Drive object not ready for operation

Message value: -
Drive object: All objects
Reaction: NONE
Acknowledge: NONE
Cause: For the active drive object involved, at least one activated component is missing.
Note:
All other active and operational drive objects can be in the "RUN" state.
Remedy: The alarm automatically disappears again with the following actions:
- de-activate the drive object involved (p0105 = 0).
- de-activate the components involved (p0125 = 0, p0145 = 0, p0155 = 0, p0165 = 0).
- re-insert the components involved.
See also: p0105, p0125, p0145, p0155

A01316 Drive object inactive and again ready for operation

Message value: -
Drive object: All objects
Reaction: NONE
Acknowledge: NONE
Cause: If, when inserting a component of the target topology, an inactive, non-operational drive object becomes operational again. The associated parameter of the component is, in this case, set to "activate" (p0125, p0145, p0155, p0165).
Note:
This is the only message that is displayed for a de-activated drive object.
Remedy: The alarm automatically disappears again with the following actions:
- activate the drive object involved (p0105 = 1).
- again withdraw the components involved.
See also: p0105 (Activate/de-activate drive object)

A01317 (N) De-activated component again present

Message value: -
Drive object: All objects
Reaction: NONE
Acknowledge: NONE
Cause: If a component of the target topology for an active drive object is inserted and the associated parameter of the component is set to "de-activate" (p0125, p0145, p0155, p0165).
Note:
This is the only message that is displayed for a de-activated component.
Remedy: The alarm automatically disappears again with the following actions:
- activate the components involved (p0125 = 1, p0145 = 1, p0155 = 1, p0165 = 1).
- again withdraw the components involved.
See also: p0125 (Activate/de-activate power unit components), p0145 (Activate/de-activate encoder interface), p0155 (Voltage Sensing Module, activate/de-activate)
Reaction upon N: NONE
Acknowl. upon N: NONE

© Siemens AG 2012 All Rights Reserved

A01318 BICO: De-activated interconnections present

Message value: %1

Drive object: All objects

Reaction: NONE

Acknowledge: NONE

Cause: This alarm is used in the following cases:
- If an inactive/non-operational drive object is active again/ready for operation
- If there are items in the list of BI/CI parameters (r9498[0...29], r9499[0...29])
- If the BICO interconnections saved in the list of BI/CI parameters (r9498[0...29], r9499[0...29]) have actually been changed

Remedy: Reset alarm:
- Set p9496 to 1 or 2
or
- de-activate the drive object again.

A01319 Inserted component not initialized

Message value: -

Drive object: B_INF, ENC, HUB, TB30, TM150, TM31, TM54F_MA, TM54F_SL, VECTOR_G

Reaction: NONE

Acknowledge: NONE

Cause: Initialization is required for at least one inserted component.
This is only possible if the pulses are inhibited for all the drive objects.

Remedy: Activate pulse inhibit for all drive objects.

A01320 Topology: Drive object number does not exist in configuration

Message value: %1

Drive object: All objects

Reaction: NONE

Acknowledge: NONE

Cause: A drive object number is missing in p0978
Alarm value (r2124, interpret decimal):
Index of p0101 under which the missing drive object number can be determined.

Remedy: Set p0009 to 1 and change p0978:
Rules:
- p0978 must include all of the drive object numbers (p0101).
- it is not permissible for a drive object number to be repeated.
- by entering a 0, the drive objects with PZD are separated from those without PZD.
- only 2 partial lists are permitted. After the second 0, all values must be 0.
- dummy drive object numbers (255) are only permitted in the first partial list.

A01321 Topology: Drive object number does not exist in configuration

Message value: %1

Drive object: All objects

Reaction: NONE

Acknowledge: NONE

Cause: p0978 contains a drive object number that does not exist.
Alarm value (r2124, interpret decimal):
Index of p0978 under which the drive object number can be determined.

Remedy: Set p0009 to 1 and change p0978:
Rules:
- p0978 must include all of the drive object numbers (p0101).
- it is not permissible for a drive object number to be repeated.
- by entering a 0, the drive objects with PZD are separated from those without PZD.
- only 2 partial lists are permitted. After the second 0, all values must be 0.
- dummy drive object numbers (255) are only permitted in the first partial list.

© Siemens AG 2012 All Rights Reserved

A01322 Topology: Drive object number present twice in configuration

Message value: %1
Drive object: All objects
Reaction: NONE
Acknowledge: NONE
Cause: A drive object number is present more than once in p0978.
Alarm value (r2124, interpret decimal):
Index of p0978 under which the involved drive object number is located.
Remedy: Set parameter p0009 = 1 and change p0978:
Rules:
- p0978 must include all of the drive object numbers (p0101).
- it is not permissible for a drive object number to be repeated.
- by entering a 0, the drive objects with PZD are separated from those without PZD.
- only 2 partial lists are permitted. After the second 0, all values must be 0.
- dummy drive object numbers (255) are only permitted in the first partial list.

A01323 Topology: More than two partial lists created

Message value: %1
Drive object: All objects
Reaction: NONE
Acknowledge: NONE
Cause: Partial lists are available more than twice in p0978. After the second 0, all must be 0.
Alarm value (r2124, interpret decimal):
Index of p0978 under which the illegal value is located.
Remedy: Set p0009 to 1 and change p0978:
Rules:
- p0978 must include all of the drive object numbers (p0101).
- it is not permissible for a drive object number to be repeated.
- by entering a 0, the drive objects with PZD are separated from those without PZD.
- only 2 partial lists are permitted. After the second 0, all values must be 0.
- dummy drive object numbers (255) are only permitted in the first partial list.

A01324 Topology: Dummy drive object number incorrectly created

Message value: %1
Drive object: All objects
Reaction: NONE
Acknowledge: NONE
Cause: In p0978, dummy drive object numbers (255) are only permitted in the first partial list.
Alarm value (r2124, interpret decimal):
Index of p0978 under which the illegal value is located.
Remedy: Set p0009 to 1 and change p0978:
Rules:
- p0978 must include all of the drive object numbers (p0101).
- it is not permissible for a drive object number to be repeated.
- by entering a 0, the drive objects with PZD are separated from those without PZD.
- only 2 partial lists are permitted. After the second 0, all values must be 0.
- dummy drive object numbers (255) are only permitted in the first partial list.

F01325 Topology: Component number not present in target topology

Message value: Component number: %1
Drive object: All objects
Reaction: NONE
Acknowledge: IMMEDIATELY
Cause: The component configured in a parameter (e.g. p0121, p0131, etc.) is not present in the target topology.
Alarm value (r2124, interpret decimal):
Configured component number that is not present in target topology.
Remedy: Establish topology and DO configuration consistency.

© Siemens AG 2012 All Rights Reserved

A01330 Topology: Quick commissioning not possible

Message value: Fault cause: %1, supplementary information: %2, preliminary component number: %3

Drive object: All objects

Reaction: NONE

Acknowledge: NONE

Cause: Unable to carry out a quick commissioning. The existing actual topology does not fulfill the requirements.
Alarm value (r2124, interpret hexadecimal):
ccccbbaa hex: cccc = preliminary component number, bb = supplementary information, aa = fault cause
aa = 01 hex = 1 dec:
On one component illegal connections were detected.
- bb = 01 hex = 1 dec: For a Motor Module, more than one motor with DRIVE-CLiQ was detected.
- bb = 02 hex = 2 dec: For a motor with DRIVE-CLiQ, the DRIVE-CLiQ cable is not connected to a Motor Module.
aa = 02 hex = 2 dec:
The topology contains too many components of a particular type.
- bb = 01 hex = 1 dec: There is more than one master Control Unit.
- bb = 02 hex = 2 dec: There is more than 1 infeed (8 for a parallel circuit configuration).
- bb = 03 hex = 3 dec: There are more than 10 Motor Modules (8 for a parallel circuit configuration).
- bb = 04 hex = 4 dec: There are more than 9 encoders.
- bb = 05 hex = 5 dec: There are more than 8 Terminal Modules.
- bb = 07 hex = 7 dec: Unknown component type
- bb = 08 hex = 8 dec: There are more than 6 drive slaves.
- bb = 09 hex = 9 dec: Connection of a drive slave not permitted.
- bb = 0a hex = 10 dec: There is no drive master.
- bb = 0b hex = 11 dec: There is more than one motor with DRIVE-CLiQ for a parallel circuit.
- bb = 0c hex = 12 dec: Different power units are being used in a parallel connection.
- cccc: Not used.
aa = 03 hex = 3 dec:
More than 16 components are connected at a DRIVE-CLiQ socket of the Control Unit.
- bb = 0, 1, 2, 3 means e.g. detected at the DRIVE-CLiQ socket X100, X101, X102, X103.
- cccc: Not used.
aa = 04 hex = 4 dec:
The number of components connected one after the other is greater than 125.
- bb: Not used.
- cccc = preliminary component number of the first component and component that resulted in the fault.
aa = 05 hex = 5 dec:
The component is not permissible for SERVO.
- bb = 01 hex = 1 dec: SINAMICS G available.
- bb = 02 hex = 2 dec: Chassis available.
- cccc = preliminary component number of the first component and component that resulted in the fault.
aa = 06 hex = 6 dec:
On one component illegal EEPROM data was detected. These must be corrected before the system continues to boot.
- bb = 01 hex = 1 dec: The Order No. [MLFB] of the power unit that was replaced includes a space retainer. The space retainer (*) must be replaced by a correct character.
- cccc = preliminary component number of the component with illegal EEPROM data.
aa = 07 hex = 7 dec:
The actual topology contains an illegal combination of components.
- bb = 01 hex = 1 dec: Active Line Module (ALM) and Basic Line Module (BLM).
- bb = 02 hex = 2 dec: Active Line Module (ALM) and Smart Line Module (SLM).
- bb = 03 hex = 3 dec: SIMOTION control (e.g. SIMOTION D445) and SINUMERIK component (e.g. NX15).
- bb = 04 hex = 4 dec: SINUMERIK control (e.g. SINUMERIK 730.net) and SIMOTION component (e.g. CX32).
- cccc: Not used.
Note:
Connection type and connection number are described in F01375.
See also: p0097 (Select drive object type), r0098 (Actual device topology), p0099 (Device target topology)

Remedy: - adapt the output topology to the permissible requirements.
- carry out commissioning using the commissioning software.
- for motors with DRIVE-CLiQ, connect the power and DRIVE-CLiQ cable to the same Motor Module (Single Motor Module: DRIVE-CLiQ at X202, Double Motor Module: DRIVE-CLiQ from motor 1 (X1) to X202, from motor 2 (X2) to X203).

© Siemens AG 2012 All Rights Reserved

Re aa = 06 hex = 6 dec and bb = 01 hex = 1 dec:
Correct the order number when commissioning using the commissioning software.
See also: p0097 (Select drive object type), r0098 (Actual device topology), p0099 (Device target topology)

A01331 Topology: At least one component not assigned to a drive object

Message value: Component number: %1

Drive object: All objects

Reaction: NONE

Acknowledge: NONE

Cause: At least one component is not assigned to a drive object.
- when commissioning, a component was not able to be automatically assigned to a drive object.
- the parameters for the data sets are not correctly set.

Alarm value (r2124, interpret decimal):
Component number of the unassigned component.

Remedy: This component is assigned to a drive object.
Check the parameters for the data sets.
Examples:
- power unit (p0121).
- motor (p0131, p0186).
- encoder interface (p0140, p0141, p0187 ... p0189).
- encoder (p0140, p0142, p0187 ... p0189).
- Terminal Module (p0151).
- option board (p0161).

F01340 Topology: Too many components on one line

Message value: Component number or connection number: %1, fault cause: %2

Drive object: All objects

Reaction: NONE

Acknowledge: IMMEDIATELY

Cause: For the selected communications clock cycle, too many DRIVE-CLiQ components are connected to one line of the Control Unit.
Fault value (r0949, interpret hexadecimal):
xyy hex: x = fault cause, yy = component number or connection number.
1yy:
The communications clock cycle of the DRIVE-CLiQ connection on the Control Unit is not sufficient for all read transfers.
2yy:
The communications clock cycle of the DRIVE-CLiQ connection on the Control Unit is not sufficient for all write transfers.
3yy:
Cyclic communication is fully utilized.
4yy:
The DRIVE-CLiQ cycle starts before the earliest end of the application. An additional dead time must be added to the control. Sign-of-life errors can be expected.
The conditions of operation with a current controller sampling time of 31.25 µs have not been maintained.
5yy:
Internal buffer overflow for net data of a DRIVE-CLiQ connection.
6yy:
Internal buffer overflow for receive data of a DRIVE-CLiQ connection.
7yy:
Internal buffer overflow for send data of a DRIVE-CLiQ connection.
8yy:
The component clock cycles cannot be combined with one another
900:
The lowest common multiple of the clock cycles in the system is too high to be determined.
901:
The lowest common multiple of the clock cycles in the system cannot be generated with the hardware.

© Siemens AG 2012 All Rights Reserved

Remedy: - check the DRIVE-CLiQ connection.
- Reduce the number of components on the DRIVE-CLiQ line involved and distribute these to other DRIVE-CLiQ sockets of the Control Unit. This means that communication is uniformly distributed over several lines.
Re fault value = 1yy - 4yy in addition:
- increase the sampling times (p0112, p0115, p4099). If necessary, for DCC or FBLOCKS, change the assignment of the run-time group (p21000, p20000) so that the sampling time (r21001, r20001) is increased.
- if necessary, reduce the number of cyclically calculated blocks (DCC) and/or function blocks (FBLOCKS).
- reduce the function modules (r0108).
- establish the conditions for operation with a current controller sampling time of 31.25 µs (at the DRIVE-CLiQ line, only operate Motor Modules and Sensor Modules with this sampling time and only use a permitted Sensor Module (e.g. SMC20, this means a 3 at the last position of the order number)).
- For an NX, the corresponding Sensor Module for a possibly existing second measuring system should be connected to a free DRIVE-CLiQ socket of the NX.
Re fault value = 8yy in addition:
- check the clock cycles settings (p0112, p0115, p4099). Clock cycles on a DRIVE-CLiQ line must be perfect integer multiples of one another. As clock cycle on a line, all clock cycles of all drive objects in the previously mentioned parameters apply, which have components on the line involved.
Re fault value = 9yy in addition:
- check the clock cycles settings (p0112, p0115, p4099). The lower the numerical value difference between two clock cycles, the higher the lowest common multiple. This behavior has a significantly stronger influence, the higher the numerical values of the clock cycles.

F01341 Topology: Maximum number of DRIVE-CLiQ components exceeded

Message value: -

Drive object: All objects

Reaction: NONE

Acknowledge: IMMEDIATELY

Cause: Too many DRIVE-CLiQ components were defined in the actual topology.
Note:
Pulse enable is withdrawn and prevented.

Remedy: - check the DRIVE-CLiQ connection.
- reduce the number components on the DRIVE-CLiQ line involved in order to maintain the maximum quantity structure.

F01354 Topology: Actual topology indicates an illegal component

Message value: Fault cause: %1, component number: %2

Drive object: All objects

Reaction: OFF2

Acknowledge: IMMEDIATELY

Cause: The actual topology indicates at least one illegal component.
Fault value (r0949, interpret hexadecimal):
yyxx hex: yy = component number, xx = cause.
xx = 1: Component at this Control Unit not permissible.
xx = 2: Component in combination with another component not permissible.
Note:
Pulse enable is prevented.

Remedy: Remove the illegal components and restart the system.

F01355 Topology: Actual topology changed

Message value: %1

Drive object: All objects

Reaction: NONE

Acknowledge: IMMEDIATELY

Cause: The device target topology (p0099) does not correspond to the device actual topology (r0098).
The fault only occurs if the topology was commissioned using the automatic internal device mechanism and not using the commissioning software.
Fault value (r0949, interpret decimal):
Only for internal Siemens troubleshooting.
See also: r0098 (Actual device topology), p0099 (Device target topology)

© Siemens AG 2012 All Rights Reserved

Remedy: One of the following counter-measures can be selected if no faults have occurred in the topology detection itself:
If commissioning is still not completed:
- carry out a self-commissioning routine (starting from p0009 = 1).
In general:
Set p0099 = r0098, set p0009 = 0; for existing Motor Modules, this results in servo drives being automatically generated (p0107).
Generating servo drives: Set p0097 to 1, set p0009 to 0.
Generating vector drives: Set p0097 to 2, set p0009 to 0.
Generating vector drives with parallel circuit: Set p0097 to 12, set p0009 to 0.
In order to set configurations in p0108, before setting p0009 to 0, it is possible to first set p0009 to 2 and modify p0108. The index corresponds to the drive object (p0107).
If commissioning has already been completed:
- re-establish the original connections and re-connect power to the Control Unit.
- restore the factory setting for the complete equipment (all of the drives) and allow automatic self-commissioning again.
- change the device parameterization to match the connections (this is only possible using the commissioning software).
Notice:
Topology changes that result in this fault being generated cannot be accepted by the automatic function in the device, but must be transferred using the commissioning software and parameter download. The automatic function in the device only allows constant topology to be used. Otherwise, when the topology is changed, all of the previous parameter settings are lost and replaced by the factory setting.
See also: r0098 (Actual device topology)

F01356 Topology: There is a defective DRIVE-CLiQ component

Message value: Fault cause: %1, Component number: %2, Connection number: %3

Drive object: All objects

Reaction: OFF2

Acknowledge: IMMEDIATELY

Cause: The actual topology indicates at least one defective DRIVE-CLiQ component.
Fault value (r0949, interpret hexadecimal):
zzyyxx hex:
zz = connection number of the component at which the defective component is connected
yy = component number of the component at which the defective component is connected
xx = fault cause
xx = 1: Component at this Control Unit not permissible.
xx = 2: component with communication defect.
Note:
Pulse enable is withdrawn and prevented.

Remedy: Replace the defective component and restart the system.

F01357 Topology: Two Control Units identified on the DRIVE-CLiQ line

Message value: component number: %1, connection number: %2

Drive object: All objects

Reaction: OFF2

Acknowledge: IMMEDIATELY

Cause: In the actual topology, 2 Control Units are connected with one another through DRIVE-CLiQ. This is not permitted.
Fault value (r0949, interpret hexadecimal):
yyxx hex:
yy = connection number of the Control Unit at which the second Control Unit is connected
xx = component number of the Control Unit at which the second Control Unit is connected
Note:
Pulse enable is withdrawn and prevented.

Remedy: - remove the second Control Unit and restart the system.
- for the component DRIVE-CLiQ extension, interchange the hybrid cable (IN/OUT).

© Siemens AG 2012 All Rights Reserved

A01358 Topology: Line termination not available

Message value: CU connection number: %1, component number: %2, connection number: %3

Drive object: All objects

Reaction: NONE

Acknowledge: NONE

Cause: At least one line with distributed drives is not terminated. The last participant on the line must be terminated with a line termination connector.
This therefore ensures the degree of protection of the distributed drives.
Fault value (r0949, interpret hexadecimal):
zzyyxx hex:
zz = connection number of the distributed drive where there is no terminating connector
yy = component number
xx = CU connection number

Remedy: Install the line terminating connector for the last distributed drive.

F01360 Topology: Actual topology not permissible

Message value: Fault cause: %1, preliminary component number: %2

Drive object: All objects

Reaction: NONE

Acknowledge: IMMEDIATELY

Cause: The detected actual topology is not permissible.
Fault value (r0949, interpret hexadecimal):
ccccbbaa hex: cccc = preliminary component number, aa = fault cause
aa = 01 hex = 1 dec:
Too many components were detected at the Control Unit. A maximum of 199 components is permissible.
aa = 02 hex = 2 dec:
The component type of a component is not known.
aa = 03 hex = 3 dec:
It is illegal to combine ALM and BLM.
aa = 04 hex = 4 dec:
It is illegal to combine ALM and SLM.
aa = 05 hex = 5 dec:
It is illegal to combine BLM and SLM.
aa = 06 hex = 6 dec:
A CX32 was not directly connected to a permitted Control Unit.
aa = 07 hex = 7 dec:
An NX10 or NX15 was not directly connected to a permitted Control Unit.
aa = 08 hex = 8 dec:
A component was connected to a Control Unit that is not permitted for this purpose.
aa = 09 hex = 9 dec:
A component was connected to a Control Unit with out-of-date firmware.
aa = 0A hex = 10 dec:
Too many components of a particular type detected.
aa = 0B hex = 11 dec:
Too many components of a particular type detected on a single line.
Note:
The drive system is no longer booted. In this state, the drive control (closed-loop) cannot be enabled.

Remedy: Re fault cause = 1:
Change the configuration. Connect less than 199 components to the Control Unit.
Re fault cause = 2:
Remove the component with unknown component type.
Re fault cause = 3, 4, 5:
Establish a valid combination.
Re fault cause = 6, 7:
Connect the expansion module directly to a permitted Control Unit.
Re fault cause = 8:
Remove component or use a permissible component.
Re fault cause = 9:
Upgrade the firmware of the Control Unit to a later version.

© Siemens AG 2012 All Rights Reserved

Re fault cause = 10, 11:
Reduce the number of components.

A01361 Topology: Actual topology contains SINUMERIK and SIMOTION components

Message value: %1

Drive object: All objects

Reaction: NONE

Acknowledge: NONE

Cause: The detected actual topology contains SINUMERIK and SIMOTION components.
The drive system is no longer booted. In this state, the drive control (closed-loop) cannot be enabled.
Alarm value (r2124, interpret hexadecimal):
ddccbbaa hex: cc = fault cause, bb = component class of the actual topology, aa = component number of the component
cc = 01 hex = 1 dec:
An NX10 or NX15 was connected to a SIMOTION control.
cc = 02 hex = 2 dec:
A CX32 was connected to a SINUMERIK control.

Remedy: Re alarm value = 1:
Replace all NX10 or NX15 by a CX32.
Re alarm value = 2:
Replace all CX32 by an NX10 or NX15.

A01362 Topology: Topology rule(s) broken

Message value: %1

Drive object: All objects

Reaction: NONE

Acknowledge: NONE

Cause: At least one topology rule for the SINAMICS S120 Combi has been broken.
In the event of a fault, the ramping up of the drive system is aborted and closed-loop drive control is not enabled.
Alarm value (r2124, interpret decimal):
The alarm value indicates which rule has been violated.
1: The S120 Combi may only be wired via DRIVE-CLiQ socket X200 to X100 on the NCU.
2: Only one Single Motor Module (SMM) or one Double Motor Module (DMM) may be connected via X200 to the DRIVE-CLiQ socket X101 on the NCU.
3: Only one Terminal Module 54F (TM54F) or one DRIVE-CLiQ Hub Module (hub) may be connected via X500 to the DRIVE-CLiQ socket X102 on the NCU.
4: Only Sensor Modules may be connected to DRIVE-CLiQ sockets X201 up to X203 (3-axis) or X204 (4-axis) on the S120 Combi.
5: Only one Sensor Module, type SMC20 or SME20 may be connected to DRIVE-CLiQ socket X205 (X204 is not available for 3-axis).
6: If a Single Motor Module is being used as the first expansion axis, only one more Single Motor Module may be connected (via X200 to X201 on the first Single Motor Module).
7: Only Sensor Modules may be connected to the corresponding DRIVE-CLiQ socket X202 on any Single Motor Modules which may be present.
8: For a second Single Motor Module or for a Double Motor Module, it is not permissible to connect anything at X201.
9: If a Double Motor Module is used as an expansion axis, only Sensor Modules may be connected to X202 and X203.
10: If a Terminal Module 54F (TM54F) is configured, only one DRIVE-CLiQ Hub Module (DMC20, DME20) may be connected to X501 of the TM54F module via DRIVE-CLiQ socket X500.
11: On the DRIVE-CLiQ Hub Module, only Sensor Modules Cabinet (SMC) and Sensor Modules External (SME) may be connected to X501 through X505.
12: Only certain Motor Modules may be used for expansion axes.
13: For an S120 Combi with 3 axes, nothing must be connected at the DRIVE-CLiQ Hub Module at X503.

Remedy: Evaluate the fault value and ensure compliance with the corresponding topology rule(s).

© Siemens AG 2012 All Rights Reserved

F01375 Topology: Actual topology, duplicate connection between two components

Message value: Preliminary component number: %1, component class: %2, connection number: %3

Drive object: All objects

Reaction: NONE

Acknowledge: IMMEDIATELY

Cause: When detecting the actual topology, a ring-type connection was detected.
Fault value (r0949, interpret hexadecimal):
ccbbaaaa hex:
cc = connection number
bb = component class
aaaa = preliminary component number of a component included in the ring
Component class:
1: Control Unit.
2: Motor Module.
3: Line Module.
4: Sensor Module (SM).
5: Voltage Sensing Module (VSM).
6: Terminal Module (TM).
7: DRIVE-CLiQ Hub Module.
8: Controller Extension 32 (CX32, NX10, NX15).
9: Filter Module
49: DRIVE-CLiQ components (non-listed components).
50: Option Slot (e.g. Terminal Board 30).
60: Encoder (e.g. EnDat).
70: Motor with DRIVE-CLiQ.
Component type:
Precise designation within a component class (e.g. "SMC20").
Connection number:
Consecutive numbers, starting from zero, of the appropriate connection or slot (e.g. DRIVE-CLiQ connection X100 on the Control Unit has the connection number 0).

Remedy: Output the fault value and remove the specified connection.
Note:
Under "Topology --> Topology view" the commissioning software where relevant offers improved diagnostics capability (e.g. setpoint/actual value comparison).

F01380 Topology: Actual topology, defective EEPROM

Message value: Preliminary component number: %1

Drive object: All objects

Reaction: NONE

Acknowledge: POWER ON

Cause: When detecting the actual topology, a component with a defective EEPROM was detected.
Fault value (r0949, interpret hexadecimal):
bbbbaaaa hex:
aaaa = preliminary component number of the defective components

Remedy: Output the fault value and remove the defected component.

A01381 Topology: Comparison power unit shifted

Message value: Component number: %1, component class: %2, component number: %3, connection number: %4

Drive object: All objects

Reaction: NONE

Acknowledge: NONE

Cause: The topology comparison has detected a power unit in the actual topology that has been shifted with respect to the target topology.
Alarm value (r2124, interpret hexadecimal):
ddccbbaa hex:
dd = connection number
cc = component number
bb = component class
aa = component number of the component shifted in the target topology

© Siemens AG 2012 All Rights Reserved

Note:
The connection in the actual topology where the shifted component was detected is described in dd, cc and bb.
Component class and connection number are described in F01375.
The drive system is no longer booted. In this state, the drive control (closed-loop) cannot be enabled.

Remedy: Adapting the topologies:
- undo the change to the actual topology by changing over the DRIVE-CLiQ cables.
- commissioning software: Go online, upload the drive unit, adapt the topology offline and download the modified project.
- automatically remove the topology error (p9904).

Note:
Under "Topology --> Topology view" the commissioning software where relevant offers improved diagnostics capability (e.g. setpoint/actual value comparison).

A01382 Topology: Comparison Sensor Module shifted

Message value: Component number: %1, component class: %2, component number: %3, connection number: %4

Drive object: All objects

Reaction: NONE

Acknowledge: NONE

Cause: The topology comparison has detected a Sensor Module in the actual topology that has been shifted with respect to the target topology.
Alarm value (r2124, interpret hexadecimal):
ddccbbaa hex:
dd = connection number
cc = component number
bb = component class
aa = component number of the component shifted in the target topology
Note:
The connection in the actual topology where the shifted component was detected is described in dd, cc and bb.
Component class and connection number are described in F01375.
The drive system is no longer booted. In this state, the drive control (closed-loop) cannot be enabled.

Remedy: Adapting the topologies:
- undo the change to the actual topology by changing over the DRIVE-CLiQ cables.
- commissioning software: Go online, upload the drive unit, adapt the topology offline and download the modified project.
- automatically remove the topology error (p9904).

Note:
Under "Topology --> Topology view" the commissioning software where relevant offers improved diagnostics capability (e.g. setpoint/actual value comparison).

A01383 Topology: Comparison Terminal Module shifted

Message value: Component number: %1, component class: %2, component number: %3, connection number: %4

Drive object: All objects

Reaction: NONE

Acknowledge: NONE

Cause: The topology comparison has detected a Terminal Module in the actual topology that has been shifted with respect to the target topology.
Alarm value (r2124, interpret hexadecimal):
ddccbbaa hex:
dd = connection number
cc = component number
bb = component class
aa = component number of the component shifted in the target topology
Note:
The connection in the actual topology where the shifted component was detected is described in dd, cc and bb.
Component class and connection number are described in F01375.
The drive system is no longer booted. In this state, the drive control (closed-loop) cannot be enabled.

Remedy: Adapting the topologies:
- undo the change to the actual topology by changing over the DRIVE-CLiQ cables.
- commissioning software: Go online, upload the drive unit, adapt the topology offline and download the modified project.
- automatically remove the topology error (p9904).

© Siemens AG 2012 All Rights Reserved

Note:
Under "Topology --> Topology view" the commissioning software where relevant offers improved diagnostics capability (e.g. setpoint/actual value comparison).

A01384 Topology: Comparison DRIVE-CLiQ Hub Module shifted

Message value: Component number: %1, component class: %2, component number: %3, connection number: %4

Drive object: All objects

Reaction: NONE

Acknowledge: NONE

Cause: The topology comparison has detected a DRIVE-CLiQ Hub Module in the actual topology that has been shifted with respect to the target topology.
Alarm value (r2124, interpret hexadecimal):
ddccbbaa hex:
dd = connection number
cc = component number
bb = component class
aa = component number of the component shifted in the target topology
Note:
The connection in the actual topology where the shifted component was detected is described in dd, cc and bb.
Component class and connection number are described in F01375.
The drive system is no longer booted. In this state, the drive control (closed-loop) cannot be enabled.

Remedy: Adapting the topologies:
- undo the change to the actual topology by changing over the DRIVE-CLiQ cables.
- commissioning software: Go online, upload the drive unit, adapt the topology offline and download the modified project.
- automatically remove the topology error (p9904).
Note:
Under "Topology --> Topology view" the commissioning software where relevant offers improved diagnostics capability (e.g. setpoint/actual value comparison).

A01385 Topology: Comparison CX32 shifted

Message value: Component number: %1, component class: %2, component number: %3, connection number: %4

Drive object: All objects

Reaction: NONE

Acknowledge: NONE

Cause: The topology comparison has detected a controller extension 32 (CX32) in the actual topology that has been shifted with respect to the target topology.
Alarm value (r2124, interpret hexadecimal):
ddccbbaa hex:
dd = connection number
cc = component number
bb = component class
aa = component number of the component shifted in the target topology
Note:
The connection in the actual topology where the shifted component was detected is described in dd, cc and bb.
Component class and connection number are described in F01375.
The drive system is no longer booted. In this state, the drive control (closed-loop) cannot be enabled.

Remedy: Adapting the topologies:
- undo the change to the actual topology by changing over the DRIVE-CLiQ cables.
- commissioning software: Go online, upload the drive unit, adapt the topology offline and download the modified project.
- automatically remove the topology error (p9904).
Note:
Under "Topology --> Topology view" the commissioning software where relevant offers improved diagnostics capability (e.g. setpoint/actual value comparison).

© Siemens AG 2012 All Rights Reserved

A01386 Topology: Comparison DRIVE-CLiQ component shifted

Message value: Component number: %1, component class: %2, component number: %3, connection number: %4

Drive object: All objects

Reaction: NONE

Acknowledge: NONE

Cause: The topology comparison has detected a DRIVE-CLiQ component in the actual topology that has been shifted with respect to the target topology.
Alarm value (r2124, interpret hexadecimal):
ddccbbaa hex:
dd = connection number
cc = component number
bb = component class
aa = component number of the component shifted in the target topology
Note:
The connection in the actual topology where the shifted component was detected is described in dd, cc and bb.
Component class and connection number are described in F01375.
The drive system is no longer booted. In this state, the drive control (closed-loop) cannot be enabled.

Remedy: Adapting the topologies:
- undo the change to the actual topology by changing over the DRIVE-CLiQ cables.
- commissioning software: Go online, upload the drive unit, adapt the topology offline and download the modified project.
- automatically remove the topology error (p9904).
Note:
Under "Topology --> Topology view" the commissioning software where relevant offers improved diagnostics capability (e.g. setpoint/actual value comparison).

A01387 Topology: Comparison option slot component shifted

Message value: Component number: %1, component class: %2, component number: %3, connection number: %4

Drive object: All objects

Reaction: NONE

Acknowledge: NONE

Cause: The topology comparison has detected a option slot component in the actual topology that has been shifted with respect to the target topology.
Alarm value (r2124, interpret hexadecimal):
ddccbbaa hex:
dd = connection number
cc = component number
bb = component class
aa = component number of the component shifted in the target topology
Note:
The connection in the actual topology where the shifted component was detected is described in dd, cc and bb.
Component class and connection number are described in F01375.
The drive system is no longer booted. In this state, the drive control (closed-loop) cannot be enabled.

Remedy: Adapting the topologies:
- undo the change to the actual topology by changing over the DRIVE-CLiQ cables.
- commissioning software: Go online, upload the drive unit, adapt the topology offline and download the modified project.
- automatically remove the topology error (p9904).
Note:
Under "Topology --> Topology view" the commissioning software where relevant offers improved diagnostics capability (e.g. setpoint/actual value comparison).

A01388 Topology: Comparison EnDat encoder shifted

Message value: Component number: %1, component class: %2, component number: %3, connection number: %4

Drive object: All objects

Reaction: NONE

Acknowledge: NONE

Cause: The topology comparison has detected an EnDat encoder in the actual topology that has been shifted with respect to the target topology.

© Siemens AG 2012 All Rights Reserved

Alarm value (r2124, interpret hexadecimal):
ddccbbaa hex:
dd = connection number
cc = component number
bb = component class
aa = component number of the component shifted in the target topology
Note:
The connection in the actual topology where the shifted component was detected is described in dd, cc and bb.
Component class and connection number are described in F01375.
The drive system is no longer booted. In this state, the drive control (closed-loop) cannot be enabled.

Remedy: Adapting the topologies:
- undo the change to the actual topology by changing over the DRIVE-CLiQ cables.
- commissioning software: Go online, upload the drive unit, adapt the topology offline and download the modified project.
- automatically remove the topology error (p9904).
Note:
Under "Topology --> Topology view" the commissioning software where relevant offers improved diagnostics capability (e.g. setpoint/actual value comparison).

A01389 Topology: Comparison motor with DRIVE-CLiQ shifted

Message value: Component number: %1, component class: %2, component number: %3, connection number: %4

Drive object: All objects

Reaction: NONE

Acknowledge: NONE

Cause: The topology comparison has detected a motor with DRIVE-CLiQ in the actual topology that has been shifted with respect to the target topology.
Alarm value (r2124, interpret hexadecimal):
ddccbbaa hex:
dd = connection number
cc = component number
bb = component class
aa = component number of the component shifted in the target topology
Note:
The connection in the actual topology where the shifted component was detected is described in dd, cc and bb.
Component class and connection number are described in F01375.
The drive system is no longer booted. In this state, the drive control (closed-loop) cannot be enabled.

Remedy: Adapting the topologies:
- undo the change to the actual topology by changing over the DRIVE-CLiQ cables.
- commissioning software: Go online, upload the drive unit, adapt the topology offline and download the modified project.
- automatically remove the topology error (p9904).
Note:
Under "Topology --> Topology view" the commissioning software where relevant offers improved diagnostics capability (e.g. setpoint/actual value comparison).

A01416 Topology: Comparison additional component in actual topology

Message value: Component number: %1, Component class: %2, Connection number: %3

Drive object: All objects

Reaction: NONE

Acknowledge: NONE

Cause: The topology comparison has found a component in the actual topology which is not specified in the target topology.
The alarm value includes the component number and connection number of the component with which the additional component is connected.
Alarm value (r2124, interpret hexadecimal):
ddccbbaa hex:
cc = connection number
bb = component class of the additional component
aa = component number
Note:
- component class and connection number are described in F01375.
- components that are connected to this additional component are not operational.

© Siemens AG 2012 All Rights Reserved

Remedy: Adapting the topologies:
- remove the additional component in the actual topology.
- download the target topology that matches the actual topology (commissioning software).
Note:
Under "Topology --> Topology view" the commissioning software where relevant offers improved diagnostics capability (e.g. setpoint/actual value comparison).

A01420 Topology: Comparison a component is different

Message value: Component number: %1, component class target: %2, component class actual: %3, fault cause: %4

Drive object: All objects

Reaction: NONE

Acknowledge: NONE

Cause: The topology comparison has detected differences in the actual and target topologies in relation to one component.
There are differences in the electronic rating plate.
Alarm value (r2124, interpret hexadecimal):
ddccbbaa hex: aa = component number of the component, bb = component class of the target topology, cc = component class of the actual topology, dd = fault cause
dd = 01 hex = 1 dec:
Different component type.
dd = 02 hex = 2 dec:
Different Order No.
dd = 03 hex = 3 dec:
Different manufacturer.
dd = 04 hex = 4 dec:
Connection changed over for a multi-component slave (e.g. Double Motor Module), defective EEPROM data in the electronic rating plate, or only part of a multi-component slave set to "de-activate and not present".
dd = 05 hex = 5 dec:
A CX32 was replaced by an NX10 or NX15.
dd = 06 hex = 6 dec:
An NX10 or NX15 was replaced by a CX32.
Note:
Component class and component type are described in F01375.
The drive system is no longer booted. In this state, the drive control (closed-loop) cannot be enabled.

Remedy: Adapting the topologies:
- check the component soft-wired connections against the hardware configuration of the drive unit in the commissioning software and correct differences.
- parameterize the topology comparison of all components (p9906).
- parameterize the topology comparison of one components (p9907, p9908).
Note:
Under "Topology --> Topology view" the commissioning software where relevant offers improved diagnostics capability (e.g. setpoint/actual value comparison).

A01421 Topology: Comparison different components

Message value: Component number: %1, component class target: %2, component class actual: %3, fault cause: %4

Drive object: B_INF, TM150, VECTOR_G

Reaction: NONE

Acknowledge: NONE

Cause: The topology comparison has detected differences in the actual and target topologies in relation to one component.
The component class, the component type or the number of connections differ.
Alarm value (r2124, interpret hexadecimal):
ddccbbaa hex: aa = component number of the component, bb = component class of the target topology, cc = component class of the actual topology, dd = fault cause
dd = 01 hex = 1 dec:
Different component class.
dd = 02 hex = 2 dec:
Different component type.
dd = 03 hex = 3 dec:
Different Order No.
dd = 04 hex = 4 dec:
Different number of connections.

© Siemens AG 2012 All Rights Reserved

Note:
Component class, component type and connection number are described in F01375.
The drive system is no longer booted. In this state, the drive control (closed-loop) cannot be enabled.

Remedy: Check the component soft-wired connections against the hardware configuration of the drive unit in the commissioning software and correct differences.
Note:
Under "Topology --> Topology view" the commissioning software where relevant offers improved diagnostics capability (e.g. setpoint/actual value comparison).

A01425 Topology: Comparison serial number of a component is different

Message value: Component number: %1, Component class: %2, Differences: %3

Drive object: All objects

Reaction: NONE

Acknowledge: NONE

Cause: The topology comparison has detected differences in the actual and target topologies in relation to one component.
The serial number is different.
Alarm value (r2124, interpret hexadecimal):
ddccbbaa hex:
cc = number of differences
bb = component class
aa = component number of the component
Note:
The component class is described in F01375.
The drive system is no longer booted. In this state, the drive control (closed-loop) cannot be enabled.

Remedy: Adapting the topologies:
- change over the actual topology to match the target topology.
- download the target topology that matches the actual topology (commissioning software).
Re byte cc:
cc = 1 --> can be acknowledged using p9904 or p9905.
cc > 1 --> can be acknowledged using p9905 and can be de-activated using p9906 or p9907/p9908.
Note:
Under "Topology --> Topology view" the commissioning software where relevant offers improved diagnostics capability (e.g. setpoint/actual value comparison).
See also: p9904 (Topology comparison, acknowledge differences), p9905 (Device specialization), p9906 (Topology comparison, comparison stage of all components), p9907 (Topology comparison, comparison stage of the component number), p9908 (Topology comparison, comparison stage of a component)

A01428 Topology: Comparison connection of a component is different

Message value: Component number: %1, Component class: %2, Connection number1: %3, Connection number2: %4

Drive object: All objects

Reaction: NONE

Acknowledge: NONE

Cause: The topology comparison has detected differences in the actual and target topologies in relation to one component.
A component was connected to another connection.
The different connections of a component are described in the alarm value:
Alarm value (r2124, interpret hexadecimal):
ddccbbaa hex:
dd = connection number of the target topology
cc = connection number of the actual topology
bb = component class
aa = component number
Note:
Component class and connection number are described in F01375.
The drive system is no longer booted. In this state, the drive control (closed-loop) cannot be enabled.

Remedy: Adapting the topologies:
- change over the actual topology to match the target topology.
- download the target topology that matches the actual topology (commissioning software).
- automatically remove the topology error (p9904).

© Siemens AG 2012 All Rights Reserved

Note:
Under "Topology --> Topology view" the commissioning software where relevant offers improved diagnostics capability (e.g. setpoint/actual value comparison).
See also: p9904 (Topology comparison, acknowledge differences)

A01429 Topology: Comparison connection is different for more than one component

Message value: Component number: %1, Component class: %2, Connection number1: %3, Connection number2: %4

Drive object: All objects

Reaction: NONE

Acknowledge: NONE

Cause: A topology comparison has found differences between the actual and target topology for several components. A component was connected to another connection.
The different connections of a component are described in the alarm value:
Alarm value (r2124, interpret hexadecimal):
ddccbbaa hex:
dd = connection number of the target topology
cc = connection number of the actual topology
bb = component class
aa = component number
Note:
Component class and connection number are described in F01375.
The drive system is no longer booted. In this state, the drive control (closed-loop) cannot be enabled.

Remedy: Adapting the topologies:
- change over the actual topology to match the target topology.
- download the target topology that matches the actual topology (commissioning software).
Note:
In the software, a Double Motor Module behaves just like two separate DRIVE-CLiQ nodes. If a Double Motor Module is re-inserted, this can result in several differences in the actual topology.
Under "Topology --> Topology view" the commissioning software where relevant offers improved diagnostics capability (e.g. setpoint/actual value comparison).

F01451 Topology: Target topology is invalid

Message value: %1

Drive object: All objects

Reaction: NONE

Acknowledge: IMMEDIATELY

Cause: An error was detected in the target topology.
The target topology is invalid.
Fault value (r0949, interpret hexadecimal):
ccccbbaa hex: cccc = index error, bb = component number, aa = fault cause
aa = 1B hex = 27 dec: Error not specified.
aa = 1C hex = 28 dec: Value illegal.
aa = 1D hex = 29 dec: Incorrect ID.
aa = 1E hex = 30 dec: Incorrect ID length.
aa = 1F hex = 31 dec: Too few indices left.
aa = 20 hex = 32 dec: component not connected to Control Unit.

Remedy: Reload the target topology using the commissioning software.

F01470 Topology:Target topology ring-type connection detected

Message value: Component number: %1, Component class: %2, Connection number: %3

Drive object: All objects

Reaction: NONE

Acknowledge: IMMEDIATELY

Cause: A ring-type connection was detected when writing to the target topology.
Fault value (r0949, interpret hexadecimal):
ddccbbaa hex:
cc = connection number
bb = component class
aa = component number of a component included in the ring

© Siemens AG 2012 All Rights Reserved

Note:
Component class and connection number are described in F01375.

Remedy: Read out the fault value and remove one of the specified connections.
Then download the target topology again using the commissioning software.
Note:
Under "Topology --> Topology view" the commissioning software where relevant offers improved diagnostics capability (e.g. setpoint/actual value comparison).

F01475 Topology: Target topology duplicate connection between two components

Message value: Component number: %1, Component class: %2, Connection number1: %3, Connection number2: %4

Drive object: All objects

Reaction: NONE

Acknowledge: IMMEDIATELY

Cause: When writing the target topology, a duplicate connection between two components was detected.
Fault value (r0949, interpret hexadecimal):
ddccbbaa hex:
dd = connection number 2 of the duplicate connection
cc = connection number 1 of the duplicate connection
bb = component class
aa = component number of one of the components connected twice
Note:
Component class and connection number are described in F01375.

Remedy: Read out the fault value and remove one of the two specified connections.
Then download the target topology again using the commissioning software.
Note:
Under "Topology --> Topology view" the commissioning software where relevant offers improved diagnostics capability (e.g. setpoint/actual value comparison).

A01481 Topology: Comparison power unit missing in the actual topology

Message value: Component number: %1

Drive object: All objects

Reaction: NONE

Acknowledge: NONE

Cause: The topology comparison has detected a power unit in the target topology that is not available in the actual topology.
Alarm value (r2124, interpret decimal):
Component number of the additional target components.

Remedy: - delete the drive belonging to the power unit in the commissioning software project and download the new configuration to the drive unit.
- check that the actual topology matches the target topology and if required, change over.
- check DRIVE-CLiQ cables for interruption and contact problems.
- check the 24 V supply voltage.
- check that the power unit is working properly.
Note:
Under "Topology --> Topology view" the commissioning software where relevant offers improved diagnostics capability (e.g. setpoint/actual value comparison).

A01482 Topology: Comparison Sensor Module missing in the actual topology

Message value: Component number: %1

Drive object: All objects

Reaction: NONE

Acknowledge: NONE

Cause: The topology comparison has detected a Sensor Module in the target topology that is not available in the actual topology.
Alarm value (r2124, interpret decimal):
Component number of the additional target components.

Remedy: - re-configure the drive belonging to the Sensor Module in the commissioning software project (encoder configuration) and download the new configuration to the drive unit.
- delete the drive belonging to the Sensor Module in the commissioning software project and download the new configuration to the drive unit.

© Siemens AG 2012 All Rights Reserved

- check that the actual topology matches the target topology and if required, change over.
- check DRIVE-CLiQ cables for interruption and contact problems.
- check the 24 V supply voltage.
- check that the Sensor Module is working properly.
Note:
Under "Topology --> Topology view" the commissioning software where relevant offers improved diagnostics capability (e.g. setpoint/actual value comparison).

A01483 Topology: Comparison Terminal Module missing in the actual topology

Message value: Component number: %1

Drive object: All objects

Reaction: NONE

Acknowledge: NONE

Cause: The topology comparison has detected a Terminal Module in the target topology that is not available in the actual topology.
Alarm value (r2124, interpret decimal):
Component number of the additional target components.

Remedy:
- delete the Terminal Module in the commissioning software project and download the new configuration to the drive unit.
- check that the actual topology matches the target topology and if required, change over.
- check DRIVE-CLiQ cables for interruption and contact problems.
- check the 24 V supply voltage.
- check that the Terminal Module is working properly.
Note:
Under "Topology --> Topology view" the commissioning software where relevant offers improved diagnostics capability (e.g. setpoint/actual value comparison).

A01484 Topology: Comparison DRIVE-CLiQ Hub Module missing in the actual topology

Message value: Component number: %1

Drive object: All objects

Reaction: NONE

Acknowledge: NONE

Cause: The topology comparison has detected a DRIVE-CLiQ Hub Module in the target topology that does not exist in the actual topology.
Alarm value (r2124, interpret decimal):
Component number of the additional target components.

Remedy:
- delete the DRIVE-CLiQ Hub Module in the commissioning software project and download the new configuration to the drive unit.
- check that the actual topology matches the target topology and if required, change over.
- check DRIVE-CLiQ cables for interruption and contact problems.
- check the 24 V supply voltage.
- test the DRIVE-CLiQ Hub Module to ensure that it functions properly.
Note:
Under "Topology --> Topology view" the commissioning software where relevant offers improved diagnostics capability (e.g. setpoint/actual value comparison).

A01485 Topology: Comparison CX32 missing in the actual topology

Message value: Component number: %1

Drive object: All objects

Reaction: NONE

Acknowledge: NONE

Cause: The topology comparison has detected a controller extension 32 (CX32) in the target topology that is not available in the actual topology.
Alarm value (r2124, interpret decimal):
Component number of the additional target components.

Remedy:
- delete the CX32 / NX in the commissioning software project and download the new configuration to the drive unit.
- check that the actual topology matches the target topology and if required, change over.
- check DRIVE-CLiQ cables for interruption and contact problems.
- check the 24 V supply voltage.

© Siemens AG 2012 All Rights Reserved

- check that CX32/NX functions correctly.
Note:
Under "Topology --> Topology view" the commissioning software where relevant offers improved diagnostics capability (e.g. setpoint/actual value comparison).

A01486 Topology: Comparison DRIVE-CLiQ components missing in the actual topology

Message value: Component number: %1

Drive object: All objects

Reaction: NONE

Acknowledge: NONE

Cause: The topology comparison has detected a DRIVE-CLiQ component in the target topology that is not available in the actual topology.
Alarm value (r2124, interpret decimal):
Component number of the additional target components.

Remedy: - delete the drive belonging to this component in the commissioning software project and download the new configuration to the drive unit.
- re-configure the drive belonging to this component in the commissioning software project and download the new configuration to the drive unit.
- check that the actual topology matches the target topology and if required, change over.
- check DRIVE-CLiQ cables for interruption and contact problems.
- check the 24 V supply voltage.
- check that the component is working properly.
Note:
Under "Topology --> Topology view" the commissioning software where relevant offers improved diagnostics capability (e.g. setpoint/actual value comparison).

A01487 Topology: Comparison option slot components missing in the actual topology

Message value: Component number: %1

Drive object: All objects

Reaction: NONE

Acknowledge: NONE

Cause: The topology comparison has detected an option slot module in the target topology that is not available in the actual topology.
Alarm value (r2124, interpret decimal):
Component number of the additional target components.

Remedy: - delete the option board in the commissioning software project and download the new configuration to the drive unit.
- re-configure the drive unit in the commissioning software project and download the new configuration to the drive unit.
- check that the actual topology matches the target topology and if required, change over.
- check that the option board is functioning correctly
Note:
Under "Topology --> Topology view" the commissioning software where relevant offers improved diagnostics capability (e.g. setpoint/actual value comparison).

A01488 Topology: Comparison EnDat encoder missing in the actual topology

Message value: Component number: %1

Drive object: All objects

Reaction: NONE

Acknowledge: NONE

Cause: The topology comparison has detected an EnDat encoder in the target topology that is not available in the actual topology.
Alarm value (r2124, interpret decimal):
Component number of the additional target components.

Remedy: - re-configure the drive belonging to the encoder in the commissioning software project (encoder configuration) and download the new configuration to the drive unit.
- delete the drive belonging to the encoder in the commissioning software project and download the new configuration to the drive unit.
- check that the actual topology matches the target topology and if required, change over.

© Siemens AG 2012 All Rights Reserved

Note:
Under "Topology --> Topology view" the commissioning software where relevant offers improved diagnostics capability (e.g. setpoint/actual value comparison).

A01489 Topology: Comparison motor with DRIVE-CLiQ missing in the actual topology

Message value: Component number: %1

Drive object: All objects

Reaction: NONE

Acknowledge: NONE

Cause: The topology comparison has detected a motor with DRIVE-CLiQ in the target topology that is not available in the actual topology.
Alarm value (r2124, interpret decimal):
Component number of the additional target components.

Remedy: - re-configure the drive belonging to this motor in the commissioning software project and download the new configuration to the drive unit.
- re-configure the drive belonging to this motor in the commissioning software project and download the new configuration to the drive unit.
- check that the actual topology matches the target topology and if required, change over.
- check DRIVE-CLiQ cables for interruption and contact problems.
- check that the motor is working properly.
Note:
Under "Topology --> Topology view" the commissioning software where relevant offers improved diagnostics capability (e.g. setpoint/actual value comparison).

F01505 (A) BICO: Interconnection cannot be established

Message value: Parameter: %1

Drive object: All objects

Reaction: NONE

Acknowledge: IMMEDIATELY

Cause: A PROFIdrive telegram has been set (p0922).
An interconnection contained in the telegram was not able to be established.
Fault value (r0949, interpret decimal):
Parameter receiver that should be changed.

Remedy: Establish another interconnection.

Reaction upon A: NONE

Acknowl. upon A: NONE

F01506 (A) BICO: No standard telegram

Message value: Parameter: %1

Drive object: B_INF, TM150, TM31, VECTOR_G

Reaction: NONE

Acknowledge: IMMEDIATELY

Cause: The standard telegram in p0922 is not maintained and therefore p0922 is set to 999.
Fault value (r0949, interpret decimal):
BICO parameter for which the write attempt was unsuccessful.

Remedy: Again set the required standard telegram (p0922).

Reaction upon A: NONE

Acknowl. upon A: NONE

A01507 (F, N) BICO: Interconnections to inactive objects present

Message value: %1

Drive object: All objects

Reaction: NONE

Acknowledge: NONE

Cause: There are BICO interconnections to an inactive/inoperable drive object.
The BI/CI parameters involved are listed in r9498.
The associated BO/CO parameters are listed in r9499.

© Siemens AG 2012 All Rights Reserved

The list of the BICO interconnections to other drive objects is displayed in r9491 and r9492 of the de-activated drive object.
Note:
r9498 and r9499 are only written to, if p9495 is not set to 0.
Alarm value (r2124, interpret decimal):
Number of BICO interconnections found to inactive drive objects.

Remedy: - set all open BICO interconnections centrally to the factory setting with p9495 = 2.
- make the non-operational drive object active/operational again (re-insert or activate components).

Reaction upon F: Infeed: OFF2 (NONE, OFF1)
Vector: OFF2 (ENCODER, IASC/DCBRAKE, NONE, OFF1, OFF3, STOP1, STOP2)

Acknowl. upon F: IMMEDIATELY

Reaction upon N: NONE

Acknowl. upon N: NONE

A01508 BICO: Interconnections to inactive objects exceeded

Message value: -

Drive object: All objects

Reaction: NONE

Acknowledge: NONE

Cause: The maximum number of BICO interconnections (signal sinks) when de-activating a drive object was exceeded.
When de-activating a drive object, all BICO interconnections (signal sinks) are listed in the following parameters:
- r9498[0...29]: List of the BI/CI parameters involved.
- r9499[0...29]: List of the associated BO/CO parameters.

Remedy: The alarm automatically disappears as soon as no BICO interconnection (value = 0) is entered in r9498[29] and r9499[29].
Notice:
When re-activating the drive object, all BICO interconnections should be checked and if required, re-established.

F01510 BICO: Signal source is not float type

Message value: Parameter: %1

Drive object: All objects

Reaction: NONE

Acknowledge: IMMEDIATELY

Cause: The requested connector output does not have the correct data type. This interconnection is not established.
Fault value (r0949, interpret decimal):
Parameter number to which an interconnection should be made (connector output).

Remedy: Interconnect this connector input with a connector output having a float data type.

F01511 (A) BICO: Interconnection with different scalings

Message value: Parameter: %1

Drive object: All objects

Reaction: NONE

Acknowledge: IMMEDIATELY

Cause: The requested BICO interconnection was established. However, a conversion is made between the BICO output and BICO input using the reference values.
- the BICO output has different normalized units than the BICO input.
- message only for interconnections within a drive object.
Example:
The BICO output has, as normalized unit, voltage and the BICO input has current.
This means that the factor p2002/p2001 is calculated between the BICO output and the BICO input.
p2002: contains the reference value for current
p2001: contains the reference value for voltage
Fault value (r0949, interpret decimal):
Parameter number of the BICO input (signal sink).

Remedy: Not necessary.

Reaction upon A: NONE

Acknowl. upon A: NONE

© Siemens AG 2012 All Rights Reserved

F01512 BICO: No scaling available

Message value: %1

Drive object: All objects

Reaction: Infeed: OFF2 (OFF1)
Vector: OFF2

Acknowledge: POWER ON

Cause: An attempt was made to determine a conversion factor for a scaling that does not exist.
Fault value (r0949, interpret decimal):
Unit (e.g. corresponding to SPEED) for which an attempt was made to determine a factor.

Remedy: Apply scaling or check the transfer value.

F01513 (A) BICO: Interconnection cross DO with different scalings

Message value: Parameter: %1

Drive object: All objects

Reaction: NONE

Acknowledge: IMMEDIATELY

Cause: The requested BICO interconnection was established. However, a conversion is made between the BICO output and BICO input using the reference values.
An interconnection is made between different drive objects and the BICO output has different normalized units than the BICO input or the normalized units are the same but the reference values are different.
Example 1:
BICO output with voltage normalized unit, BICO input with current normalized unit, BICO output and BICO input lie in different drive objects. This means that the factor p2002/p2001 is calculated between the BICO output and the BICO input.
p2002: contains the reference value for current
p2001: contains the reference value for voltage
Example 2:
BICO output with voltage normalized unit in drive object 1 (DO1), BICO input with voltage normalized unit in drive object 2 (DO2). The reference values for voltage (p2001) of the two drive objects have different values. This means that the factor p2001(DO1)/p2001(DO2) is calculated between the BICO output and the BICO input.
p2001: contains the reference value for voltage, drive objects 1, 2
Fault value (r0949, interpret decimal):
Parameter number of the BICO input (signal sink).

Remedy: Not necessary.

Reaction upon A: NONE

Acknowl. upon A: NONE

A01514 (F) BICO: Error when writing during a reconnect

Message value: Parameter: %1

Drive object: All objects

Reaction: NONE

Acknowledge: NONE

Cause: During a reconnect operation (e.g. while booting or downloading - but can also occur in normal operation) a parameter was not able to be written to.
Example:
When writing to BICO input with double word format (DWORD), in the second index, the memory areas overlap (e.g. p8861). The parameter is then reset to the factory setting.
Alarm value (r2124, interpret decimal):
Parameter number of the BICO input (signal sink).

Remedy: Not necessary.

Reaction upon F: NONE

Acknowl. upon F: IMMEDIATELY

© Siemens AG 2012 All Rights Reserved

F01515 (A) BICO: Writing to parameter not permitted as the master control is active

Message value: -
Drive object: B_INF, VECTOR_G
Reaction: NONE
Acknowledge: IMMEDIATELY
Cause: When changing the number of CDS or when copying from CDS, the master control is active.
Remedy: If required, return the master control and repeat the operation.
Reaction upon A: NONE
Acknowl. upon A: NONE

A01590 (F) Drive: Motor maintenance interval expired

Message value: Fault cause: %1 bin
Drive object: B_INF, ENC, HUB, TB30, TM150, TM31, TM54F_MA, TM54F_SL, VECTOR_G
Reaction: NONE
Acknowledge: NONE
Cause: The selected service/maintenance interval for this motor was reached.
Alarm value (r2124, interpret decimal):
Motor data set number.
See also: p0650 (Actual motor operating hours), p0651 (Motor operating hours maintenance interval)
Remedy: carry out service/maintenance and reset the service/maintenance interval (p0651).
Reaction upon F: NONE
Acknowl. upon F: IMMEDIATELY

F01600 SI CU: STOP A initiated

Message value: %1
Drive object: VECTOR_G
Reaction: OFF2
Acknowledge: IMMEDIATELY (POWER ON)
Cause: The drive-integrated "Safety Integrated" function on the Control Unit (CU) has detected a fault and initiated a STOP A (pulse suppression via the safety shutdown path of the Control Unit).
- forced checking procedure of the safety shutdown path of the Control Unit unsuccessful.
- subsequent response to fault F01611 (defect in a monitoring channel).
Fault value (r0949, interpret decimal):
0: Stop request from the Motor Module.
1005: Pulses suppressed although STO not selected and there is no internal STOP A present.
1010: Pulses enabled although STO is selected or an internal STOP A is present.
1015: Feedback of the safe pulse suppression for Motor Modules connected in parallel are different.
9999: Subsequent response to fault F01611.
Remedy: - select Safe Torque Off and de-select again.
- replace the Motor Module involved.
For fault value = 9999:
- carry out diagnostics for fault F01611.
Note:
CU: Control Unit
MM: Motor Module
SI: Safety Integrated
STO: Safe Torque Off / SH: Safe standstill

F01611 SI CU: Defect in a monitoring channel

Message value: %1
Drive object: VECTOR_G
Reaction: NONE (OFF1, OFF2, OFF3)
Acknowledge: IMMEDIATELY (POWER ON)
Cause: The drive-integrated "Safety Integrated" function on the Control Unit (CU) has detected a fault in the crosswise data comparison between the CU and Motor Module (MM) and initiated a STOP F.
As a result of this fault, after the parameterized transition has expired (p9658), fault F01600 (SI CU: STOP A initiated) is output.

© Siemens AG 2012 All Rights Reserved

Fault value (r0949, interpret decimal):
0: Stop request from the Motor Module.
1 ... 999:
Number of the cross-compared data that resulted in this fault. This number is also displayed in r9795.
1: SI monitoring clock cycle (r9780, r9880).
2: SI enable safety functions (p9601, p9801). Crosswise data comparison is only carried out for the supported bits.
3: SI SGE changeover tolerance time (p9650, p9850).
4: SI transition period STOP F to STOP A (p9658, p9858).
5: SI enable Safe Brake Control (p9602, p9802).
6: SI Motion enable, safety-relevant functions (p9501, internal value).
7: SI pulse suppression delay time for Safe Stop 1 (p9652, p9852).
8: SI PROFIsafe address (p9610, p9810).
9: SI debounce time for STO/SBC/SS1 (MM) (p9651, p9851).
10: SI delay time for pulse suppression for ESR (p9697, p9897).
11: SI Safe Brake Adapter mode, BICO interconnection (p9621, p9821).
12: SI Safe Brake Adapter relay ON time (p9622[0], p9822[0]).
13: SI Safe Brake Adapter relay OFF time (p9622[1], p9822[1]).
14: SI PROFIsafe telegram selection (p9611, p9811).
1000: Watchdog timer has expired.
Within the time of approx. 5 x p9650, alternatively, the following was defined:
- Too many switching operations have occurred at the EP terminal of the Motor Module.
- Via PROFIsafe/TM54F, STO was too frequently initiated (also as subsequent response).
- Safe pulse cancellation (r9723.9) was too frequently initiated (also as subsequent response).
1001, 1002: Initialization error, change timer / check timer.
1900: CRC error in the SAFETY sector.
1901: CRC error in the ITCM sector.
1902: Overloading in the ITCM sector has occurred in operation.
1950: Module temperature outside the permissible temperature range.
1951: Module temperature not plausible.
2000: Status of the STO selection on the Control Unit and Motor Module are different.
2001: Feedback signal for safe pulse suppression on the Control Unit and Motor Module are different.
2002: Status of the delay timer SS1 on the Control Unit and Motor Module are different (status of the timer in p9650/p9850).
2004: Status of the STO selection for modules connected in parallel are different.
2005: Feedback signal of the safe pulse suppression on the Control Unit and Motor Modules connected in parallel are different.
6000 ... 6999:
Error in the PROFIsafe control.
For these fault values, the failsafe control signals (failsafe values) are transferred to the safety functions.
The significance of the individual message values is described in safety message C01711.

Remedy:

Re fault value = 1 ... 5 and 7 ... 999:
- check the cross data comparison that resulted in a STOP F.
- carry out a POWER ON (power off/on) for all components.
- upgrade the Motor Module software.
- upgrade the Control Unit software.

For fault value = 6:
- carry out a POWER ON (power off/on) for all components.
- upgrade the Motor Module software.
- upgrade the Control Unit software.

For fault value = 1000:
- check the EP terminal at the Motor Module (contact problems).
- PROFIsafe: Remove contact problems/faults at the PROFIBUS master/PROFINET controller.
- check the wiring of the failsafe inputs at the TM54F (contact problems).

Re fault value = 1001, 1002:
- carry out a POWER ON (power off/on) for all components.
- upgrade the Motor Module software.
- upgrade the Control Unit software.

Re fault value = 1900, 1901, 1902:
- carry out a POWER ON (power off/on) for all components.
- upgrade the Control Unit software.
- replace Control Unit.

© Siemens AG 2012 All Rights Reserved

Re fault value = 2000, 2001, 2002, 2004, 2005:
- check the tolerance time SGE changeover and if required, increase the value (p9650/p9850, p9652/p9852).
- check the wiring of the safety-relevant inputs (SGE) (contact problems).
- check the causes of the STO selection in r9772. When the SMM functions are active (p9501 = 1), STO can also be selected using these functions.
- replace the Motor Module involved.
Re fault value = 6000 ... 6999:
Refer to the description of the message values in safety message C01711.
Note:
CU: Control Unit
EP: Enable Pulses (pulse enable)
ESR: Extended Stop and Retract
MM: Motor Module
SGE: Safety-relevant input
SI: Safety Integrated
SMM: Safe Motion Monitoring
SS1: Safe Stop 1 (corresponds to Stop Category 1 acc. to EN60204)
STO: Safe Torque Off / SH: Safe standstill

F01612 SI CU: STO inputs for power units connected in parallel different

Message value: Fault cause: %1 bin

Drive object: VECTOR_G

Reaction: NONE (OFF1, OFF2, OFF3)

Acknowledge: IMMEDIATELY (POWER ON)

Cause: The drive-integrated "Safety Integrated" function on the Control Unit (CU) has identified different states of the AND'ed STO inputs for power units connected in parallel and has initiated a STOP F.
As a result of this fault, after the parameterized transition has expired (p9658), fault F01600 (SI CU: STOP A initiated) is output.
Fault value (r0949, interpret binary):
Binary image of the digital inputs of the Control Unit that are used as signal source for the function "Safe Torque Off".

Remedy: - check the tolerance time SGE changeover and if required, increase the value (p9650).
- check the wiring of the safety-relevant inputs (SGE) (contact problems).
Note:
CU: Control Unit
SGE: Safety-relevant input
SI: Safety Integrated
STO: Safe Torque Off / SH: Safe standstill

N01620 (F, A) SI CU: Safe Torque Off active

Message value: -

Drive object: VECTOR_G

Reaction: NONE

Acknowledge: NONE

Cause: The "Safe Torque Off" (STO) function of the basic functions has been selected on the Control Unit (CU) using the input terminal and is active.
Note:
- This message does not result in a safety stop response.
- This message is not output when STO is selected using the Extended Functions.

Remedy: Not necessary.
Note:
CU: Control Unit
SI: Safety Integrated
STO: Safe Torque Off / SH: Safe standstill

Reaction upon F: OFF2

Acknowl. upon F: IMMEDIATELY (POWER ON)

Reaction upon A: NONE

Acknowl. upon A: NONE

© Siemens AG 2012 All Rights Reserved

N01621 (F, A) SI CU: Safe Stop 1 active

Message value: -
Drive object: VECTOR_G
Reaction: NONE
Acknowledge: NONE
Cause: The "Safe Stop 1" (SS1) function has been selected on the Control Unit (CU) and is active.
Note:
This message does not result in a safety stop response.
Remedy: Not necessary.
Note:
CU: Control Unit
SI: Safety Integrated
SS1: Safe Stop 1 (corresponds to Stop Category 1 acc. to EN60204)
Reaction upon F: NONE (OFF3)
Acknowl. upon F: IMMEDIATELY (POWER ON)
Reaction upon A: NONE
Acknowl. upon A: NONE

F01625 SI CU: Sign-of-life error in safety data

Message value: %1
Drive object: VECTOR_G
Reaction: OFF2
Acknowledge: IMMEDIATELY (POWER ON)
Cause: The drive-integrated "Safety Integrated" function on the Control Unit (CU) has detected an error in the sign-of-life of the safety data between the CU and Motor Module (MM) and initiated a STOP A.
- there is either a DRIVE-CLiQ communication error or communication has failed.
- a time slice overflow of the safety software has occurred.
Fault value (r0949, interpret decimal):
Only for internal Siemens troubleshooting.
Remedy: - select Safe Torque Off and de-select again.
- carry out a POWER ON (power off/on) for all components.
- check whether there is a DRIVE-CLiQ communication error between the Control Unit and the Motor Module involved and, if required, carry out a diagnostics routine for the faults identified.
- de-select all drive functions that are not absolutely necessary.
- reduce the number of drives.
- check the electrical cabinet design and cable routing for EMC compliance
Note:
CU: Control Unit
MM: Motor Module
SI: Safety Integrated

F01630 SI CU: Brake control error

Message value: %1
Drive object: VECTOR_G
Reaction: OFF2
Acknowledge: IMMEDIATELY (POWER ON)
Cause: The drive-integrated "Safety Integrated" function on the Control Unit (CU) has detected a brake control fault and initiated a STOP A.
Fault value (r0949, interpret decimal):
Re fault value = 10, 11:
Fault in "open holding brake" operation.
- Parameter p1278 incorrectly set.
- No brake connected or wire breakage (check whether brake releases for p1278 = 1 and p9602/p9802 = 0 (SBC deactivated)).
- Ground fault in brake cable.
For fault value = 20:
Fault in "brake open" state.
- Short-circuit in brake winding.

© Siemens AG 2012 All Rights Reserved

Re fault value = 30, 31:
Fault in "close holding brake" operation.
- No brake connected or wire breakage (check whether brake releases for p1278 = 1 and p9602/p9802 = 0 (SBC deactivated)).
- Short-circuit in brake winding.
For fault value = 40:
Fault in "brake closed" state.
For fault value = 50:
Fault in the brake control circuit of the Control Unit or communication fault between the Control Unit and Motor Module (brake control).
For fault value = 80:
Safe Brake Adapter.
Fault in the brake control circuit of the Control Unit or communication fault between the Control Unit and Motor Module (brake control).
For fault value = 90:
Brake released for service purposes (X4).
Note:
The following causes may apply to fault values:
- motor cable is not shielded correctly.
- defect in control circuit of the Motor Module.

Remedy:
- check parameter p1278 (for SBC, only p1278 = 0 is permissible).
- for a parallel connection, check the setting of the power unit data set to control the holding brake (p7015).
- select Safe Torque Off and de-select again.
- check the motor holding brake connection.
- check the function of the motor holding brake.
- check whether there is a DRIVE-CLiQ communication error between the Control Unit and the Motor Module involved and, if required, carry out a diagnostics routine for the faults identified.
- check that the electrical cabinet design and cable routing are in compliance with EMC regulations (e.g. shield of the motor cable and brake conductors are connected with the shield connecting plate and the motor connectors are tightly screwed to the housing).
- replace the Motor Module involved.
Operation with Safe Brake Module or Safe Brake Adapter:
- check the Safe Brake Module or Safe Brake Adapter connection.
- Replace the Safe Brake Module or Safe Brake Adapter.
Note:
CU: Control Unit
SBC: Safe Brake Control
SI: Safety Integrated

F01649 SI CU: Internal software error

Message value: %1

Drive object: VECTOR_G

Reaction: OFF2

Acknowledge: IMMEDIATELY (POWER ON)

Cause: An internal error in the Safety Integrated software on the Control Unit has occurred.
Note:
This fault results in a STOP A that cannot be acknowledged.
Fault value (r0949, interpret hexadecimal):
Only for internal Siemens troubleshooting.

Remedy:
- carry out a POWER ON (power off/on) for all components.
- re-commission the "Safety Integrated" function and carry out a POWER ON.
- Upgrade the firmware of the Control Unit to a later version.
- contact the Hotline.
- replace the Control Unit.
Note:
CU: Control Unit
MM: Motor Module
SI: Safety Integrated

© Siemens AG 2012 All Rights Reserved

F01650 SI CU: Acceptance test required

Message value: %1

Drive object: All objects

Reaction: OFF2

Acknowledge: IMMEDIATELY (POWER ON)

Cause: The drive-integrated "Safety Integrated" function on the Control Unit requires an acceptance test.
Note:
This fault results in a STOP A that can be acknowledged.
Fault value (r0949, interpret decimal):
130: Safety parameters for the Motor Module not available.
Note:
This fault value is always output when Safety Integrated is commissioned for the first time.
1000: Reference and actual checksum on the Control Unit are not identical (booting).
- as a result of the changed current controller sampling time (p0115[0]), the clock cycle time for the Safety Integrated Basic Functions (r9780) was adapted.
- at least one checksum-checked piece of data is defective.
- Safety parameters set offline and loaded into the Control Unit.
2000: Reference and actual checksum on the Control Unit are not identical (commissioning mode).
- reference checksum incorrectly entered into the Control Unit (p9799 not equal to r9798).
- when de-activating the safety functions, p9501 or p9503 were not deleted.
2001: Reference and actual checksum on the Motor Module are not identical (commissioning mode).
- reference checksum incorrectly entered into the Motor Module (p9899 not equal to r9898).
- when de-activating the safety functions, p9501 or p9503 are not deleted.
2002: Enable of safety-related functions between the Control Unit and Motor Module differ (p9601 not equal to p9801).
2003: Acceptance test is required as a safety parameter has been changed.
2004: An acceptance test is required because a project with enabled safety-functions has been downloaded.
2005: The Safety logbook has identified that a functional safety checksum has changed. An acceptance test is required.
2010: Safe Brake Control is enabled differently between the Control Unit and Motor Module (p9602 not equal to p9802).
2020: Error when saving the safety parameters for the Motor Module.
3003: Acceptance test is required as a hardware-related safety parameter has been changed.
3005: The Safety logbook has identified that a hardware-related safety checksum has changed. An acceptance test is required.
9999: Subsequent response of another safety-related fault that occurred when booting that requires an acceptance test.

Remedy: For fault value = 130:
- carry out safety commissioning routine.
For fault value = 1000:
- check the Safety Integrated Basic Functions (r9780) and adapt the reference checksum (p9799).
- again carry out safety commissioning routine.
- replace the memory card or Control Unit.
- Using STARTER, activate the safety parameters for the drive involved (change settings, copy parameters, activate settings).
For fault value = 2000:
- check the safety parameters in the Control Unit and adapt the reference checksum (p9799).
For fault value = 2001:
- check the safety parameters in the Motor Module and adapt the reference checksum (p9899).
For fault value = 2002:
- enable the safety-related functions in the Control Unit and check in the Motor Module (p9601 = p9801).
Re fault value = 2003, 2004, 2005:
- Carry out an acceptance test and generate an acceptance report.
The procedure when carrying out an acceptance test as well as an example of the acceptance report are provided in the following literature:
SINAMICS S120 Function Manual Safety Integrated
The fault with fault value 2005 can only be acknowledged when the "STO" function is de-selected.
For fault value = 2010:
- check enable of the safety-related brake control in the Control Unit and Motor Module (p9602 = p9802).
For fault value = 2020:
- again carry out safety commissioning routine.
- replace the memory card or Control Unit.

© Siemens AG 2012 All Rights Reserved

For fault value = 3003:
- carry out the function checks for the modified hardware and generate an acceptance report.
The procedure when carrying out an acceptance test as well as an example of the acceptance report are provided in the following literature:
SINAMICS S120 Function Manual Safety Integrated
For fault value = 3005:
- carry out the function checks for the modified hardware and generate an acceptance report.
The fault with fault value 3005 can only be acknowledged when the "STO" function is de-selected.
For fault value = 9999:
- carry out diagnostics for the other safety-related fault that is present.
Note:
CU: Control Unit
MM: Motor Module
SI: Safety Integrated
STO: Safe Torque Off
See also: p9799 (SI reference checksum SI parameters (Control Unit)), p9899 (SI reference checksum SI parameters (Motor Module))

F01651 SI CU: Synchronization safety time slices unsuccessful

Message value: %1

Drive object: VECTOR_G

Reaction: OFF2

Acknowledge: IMMEDIATELY (POWER ON)

Cause: The "Safety Integrated" function requires a synchronization of the safety time slices between the Control Unit (CU) and Motor Module (MM) and between the Control Unit and the higher-level control. This synchronization routine was unsuccessful.
Note:
This fault results in a STOP A that cannot be acknowledged.
Fault value (r0949, interpret decimal):
121:
- with SINUMERIK Safety Integrated enabled, a drive-side warm restart was performed on the CU/NX.
- with SINUMERIK Safety Integrated enabled, the function "restore factory setting" was selected on a drive object of the CU and a drive-side warm restart was initiated.
150:
- fault in the synchronization to the PROFIBUS master.
All other values:
- only for internal Siemens troubleshooting.
See also: p9510 (SI Motion clock-cycle synchronous PROFIBUS master)

Remedy: For fault value = 121:
- carry out a common POWER ON/warm restart for the higher-level control and SINAMICS.
For fault value = 150:
- check the setting of p9510 (SI Motion clock-cycle synchronous PROFIBUS master) and if required, correct.
General:
- carry out a POWER ON (power off/on) for all components.
- upgrade the Motor Module software.
- upgrade the Control Unit software.
- upgrade the software of the higher-level control.
Note:
CU: Control Unit
MM: Motor Module
SI: Safety Integrated

F01652 SI CU: Illegal monitoring clock cycle

Message value: %1

Drive object: VECTOR_G

Reaction: OFF2

Acknowledge: IMMEDIATELY (POWER ON)

Cause: One of the Safety Integrated monitoring clock cycles is not permissible.
- the monitoring clock cycle integrated in the drive cannot be maintained due to the communication conditions required in the system.
- the monitoring clock cycle for safe motion monitoring functions is not permissible (p9500).

© Siemens AG 2012 All Rights Reserved

- the actual value sensing clock cycle for safe motion monitoring functions is not permissible (p9511).
- The sampling time for the current controller (p0112, p0115[0]) cannot be supported.

Note:
This fault results in a STOP A that cannot be acknowledged.
Fault value (r0949, interpret decimal):
For motion monitoring functions that are not enabled (p9601.2 = p9801.2 = 0, p9501 = 0), the following applies:
- Minimum setting for the monitoring clock cycle (in µs).

For motion monitoring functions that are enabled (p9601.2 = p9801.2 = 1 and/or p9501 > 0), the following applies:
100:
- No matching monitoring clock cycle was able to be found.

101:
- The monitoring clock cycle is not an integer multiple of the actual value sensing clock cycle.

102:
- An error has occurred when transferring the actual value sensing clock cycle to the Motor Module (MM).

103:
- An error has occurred when transferring the actual value sensing clock cycle to the Sensor Module.

104, 105:
- four times the current controller sampling time (p0115[0]) is greater than 1 ms when operating with a non-isochronous PROFIBUS.
- four times the current controller sampling time (p0115[0]) is greater than the DP clock cycle when operating with an isochronous PROFIBUS.
- The DP clock cycle is not an integer multiple of the sampling time of the current controller (p0115[0]).

106:
- The monitoring clock cycle does not match the monitoring clock cycle of the TM54F.

107:
- The actual value sensing clock cycle (p9511) is less than four times the current controller sampling time (p0115[0]).
- The actual value sensing clock cycle (p9511) is not an integer multiple of the sampling time of the current controller (p0115[0]).

108:
- The parameterized actual value sensing clock cycle cannot be set on this component

109:
- If the motion monitoring functions have been parameterized as encoderless (p9506), the actual value sensing clock cycle (p9511) and the current controller clock cycle (p0115[0]) must be identical.

The following applies to SINAMICS S110:
- If the motion monitoring functions have been parameterized as encoderless (p9506), the actual value sensing clock cycle p9511 must be = 250 µs.

110:
- The actual value sensing clock cycle (p9511) for safety with encoder (p9506 = 0) is less than 2 ms for this Control Unit (e.g. CU305).

111:
- The monitoring clock cycle is not an integer multiple of the sampling time of the current controller (p0115[0]).

200, 201:
- For the S120M the monitoring clock cycle cannot be maintained as a result of the conditions required in the system.

202:
- The current controller sampling time is set to zero (p0115[0]).

Remedy:

For enabled SI monitoring integrated in the drive (p9601/p9801 > 0):
- Upgrade the firmware of the Control Unit to a later version.

For enabled motion monitoring function (p9501 > 0):
- correct the monitoring clock cycle (p9500) and carry out POWER ON.

For fault value = 101:
- actual value sensing clock cycle corresponds to position control clock cycle/DP clock cycle (factory setting).
- for motion monitoring functions integrated in the drive (p9601/p9801bit 2 = 1) the actual value sensing clock cycle can be directly parameterized in P9511/p9311.

Re fault value = 104, 105:
- set a separate actual value sensing clock cycle in p9511.
- restrict operation to a maximum of two vector drives. For the standard setting in p0112, p0115, the current controller sampling time is automatically reduced to 250 µs. If the standard values were changed, then the current controller sampling time (p0112, p0115) should be appropriately set.
- increase the DP clock cycle for operation with a clock-cycle synchronous PROFIBUS so that there is a multiple clock cycle ratio of at least 4:1 between the DP clock cycle and the current controller sampling time. A clock cycle ratio of at least 8:1 is recommended.
- With firmware version 2.5, please ensure that parameter p9510 is set to 1 in the drive (clock cycle synchronous operation).

© Siemens AG 2012 All Rights Reserved

For fault value = 106:
- set the parameters for the monitoring clock cycles the same (p10000 and p9500 / p9300).
For fault value = 107:
- Set an actual value sensing clock cycle that matches the current controller clock cycle (p9511 >= 4 * p0115[0], 8 * p0115[0]) is recommended.
Note:
An actual value sensing clock cycle (p9511) that is set too low, can sporadically mean that safety messages C01711/C30711 are output with message value 1020 or 1021.
For fault value = 108:
- set a suitable actual value sensing clock cycle in p9511.
- if the DP clock cycle is used as the actual value sensing clock cycle for operation with isochronous PROFIBUS (p9511 = 0), then a suitable DP clock cycle must be configured. This must be set to less than 8 ms. If this is not possible, then p9511 must be set to the required actual value sensing clock cycle (< 8 ms).
- For SIMOTION D410-2, a suitable multiple of the DP clock cycle (e.g. 1, 2, 3, 4, 5, 6, 8, 10) must be parameterized. Otherwise, the clock cycle must be set to less than 8 ms.
For fault value = 109:
- set the actual value sensing clock cycle in p9511 to the same value as the current controller clock cycle (p0115[0]).
The following applies to SINAMICS S110:
- set the actual value sensing clock cycle to p9511 = 250 µs.
For fault value = 110:
- set the actual value sensing clock cycle in p9511 to 2 ms or higher.
For fault value = 111:
- set the monitoring clock cycle in p9500 as an integer multiple of the sampling time of the current controller (p0115[0]).
Re fault value = 200, 201:
- Increase the current controller sampling time (p0115[0]).
- If required, reduce the number of components connected to the corresponding DRIVE-CLiQ line, or distribute the components across several DRIVE-CLiQ sockets.
For fault value = 202:
- Set the current controller sampling time to a sensible value (p0115[0]).
Note:
CU: Control Unit
MM: Motor Module
SI: Safety Integrated

F01653 SI CU: PROFIBUS/PROFINET configuration error

Message value: %1

Drive object: VECTOR_G

Reaction: NONE (OFF1, OFF2, OFF3)

Acknowledge: IMMEDIATELY (POWER ON)

Cause: There is a PROFIBUS/PROFINET configuration error for using Safety Integrated monitoring functions with a higher-level control (SINUMERIK or F-PLC).
Note:
For safety functions that have been enabled, this fault results in a STOP A that cannot be acknowledged.
Fault value (r0949, interpret decimal):
200: A safety slot for receive data from the control has not been configured.
210, 220: The configured safety slot for the receive data from the control has an unknown format.
230: The configured safety slot for the receive data from the F-PLC has the incorrect length.
231: The configured safety slot for the receive data from the F-PLC has the incorrect length.
240: The configured safety slot for the receive data from the SINUMERIK has the incorrect length.
250: A PROFIsafe slot is configured in the higher-level F control, however PROFIsafe is not enabled in the drive.
300: A safety slot for the send data to the control has not been configured.
310, 320: The configured safety slot for the send data to the control has an unknown format.
330: The configured safety slot for the send data to the F-PLC has the incorrect length.
331: The configured safety slot for the send data to the F-PLC has the incorrect length.
340: The configured safety slot for the send data to the SINUMERIK has the incorrect length.

Remedy: The following generally applies:
- check and, if necessary, correct the PROFIBUS/PROFINET configuration of the safety slot on the master side.
- upgrade the Control Unit software.
For fault value = 250:
- remove the PROFIsafe configuring in the higher-level F control or enable PROFIsafe in the drive.

© Siemens AG 2012 All Rights Reserved

Re fault value = 231, 331:
- configure the PROFIsafe telegram matching the parameterization in the F-PLC.
The following applies for p9501.30 = 1 (F-DI via PROFIsafe is enabled):
- PROFIsafe telegram 900 must be configured.
For p9501.30 = 0 (F-DI not enabled via PROFIsafe), the following applies:
- PROFIsafe telegram 30 must be configured.

A01654 (F) SI CU: Deviating PROFIsafe configuration

Message value: %1

Drive object: VECTOR_G

Reaction: NONE

Acknowledge: NONE

Cause: The configuration of a PROFIsafe telegram in the higher-level control (F-PLC) does not match the parameterization in the drive.
Note:
This message does not result in a safety stop response.
Alarm value (r2124, interpret decimal):
1:
A PROFIsafe telegram is configured in the higher-level control, however PROFIsafe is not enabled in the drive (p9601.3).
2:
PROFIsafe is parameterized in the drive; however, a PROFIsafe telegram has not been configured in the higher-level control.

Remedy: The following generally applies:
- check and, if necessary, correct the PROFIsafe configuration in the higher-level control.
Re alarm value = 1:
- remove the PROFIsafe configuring in the higher-level F control or enable PROFIsafe in the drive.
Re alarm value = 2:
- configure the PROFIsafe telegram to match the parameterization in the higher-level F-control.

Reaction upon F: NONE (OFF1, OFF2, OFF3)

Acknowl. upon F: IMMEDIATELY (POWER ON)

F01655 SI CU: Align monitoring functions

Message value: %1

Drive object: VECTOR_G

Reaction: OFF2

Acknowledge: IMMEDIATELY (POWER ON)

Cause: An error has occurred when aligning the Safety Integrated monitoring functions on the Control Unit (CU) and Motor Module (MM). Control Unit and Motor Module were not able to determine a common set of supported SI monitoring functions.
- there is either a DRIVE-CLiQ communication error or communication has failed.
- Safety Integrated software releases on the Control Unit and Motor Module are not compatible with one another.
Note:
This fault results in a STOP A that cannot be acknowledged.
Fault value (r0949, interpret hexadecimal):
Only for internal Siemens troubleshooting.

Remedy: - carry out a POWER ON (power off/on) for all components.
- upgrade the Motor Module software.
- upgrade the Control Unit software.
- check the electrical cabinet design and cable routing for EMC compliance
Note:
CU: Control Unit
MM: Motor Module
SI: Safety Integrated

© Siemens AG 2012 All Rights Reserved

F01656 SI CU: Motor Module parameter error

Message value: %1

Drive object: VECTOR_G

Reaction: OFF2

Acknowledge: IMMEDIATELY (POWER ON)

Cause: When accessing the Safety Integrated parameters for the Motor Module (MM) in the non-volatile memory, an error has occurred.
Note:
This fault results in a STOP A that can be acknowledged.
Fault value (r0949, interpret decimal):
129:
- safety parameters for the Motor Module corrupted.
- drive with enabled safety functions was possibly copied offline using the commissioning software and the project downloaded.
131: Internal Motor Module software error.
132: Communication errors when uploading or downloading the safety parameters for the Motor Module.
255: Internal software error on the Control Unit.

Remedy: - re-commission the safety functions.
- upgrade the Control Unit software.
- upgrade the Motor Module software.
- replace the memory card or Control Unit.
For fault value = 129:
- activate the safety commissioning mode (p0010 = 95).
- adapt the PROFIsafe address (p9610).
- start the copy function for SI parameters (p9700 = D0 hex).
- acknowledge data change (p9701 = DC hex).
- exit the safety commissioning mode (p0010 = 0).
- save all parameters (p0977 = 1 or "copy RAM to ROM").
- carry out a POWER ON (power off/on) for all components.
For fault value = 132:
- check the electrical cabinet design and cable routing for EMC compliance
Note:
CU: Control Unit
MM: Motor Module
SI: Safety Integrated

F01657 SI CU: PROFIsafe telegram number invalid

Message value: -

Drive object: VECTOR_G

Reaction: OFF2

Acknowledge: POWER ON

Cause: The PROFIsafe telegram number set in p9611 is not valid.
When PROFIsafe is enabled (p9601.3 = 1), then a telegram number greater than zero must be entered in p9611.
Note:
This fault does not result in a safety stop response.
See also: p9611 (SI PROFIsafe telegram selection (Control Unit)), p60022 (PROFIsafe telegram selection)

Remedy: Check the telegram number setting (p9611).

F01658 SI CU: PROFIsafe telegram number not equal

Message value: -

Drive object: VECTOR_G

Reaction: OFF2

Acknowledge: IMMEDIATELY (POWER ON)

Cause: The PROFIsafe telegram number is set differently in p9611 and p60022.
For p9611 not equal to 998, the following applies:
The telegram number must be identically set in both parameters.
The following applies for p9611 = 998:
As a result of the compatibility to firmware versions < 4.5, then only the values 0 and 30 are permitted in p60022.

© Siemens AG 2012 All Rights Reserved

Note:
This fault does not result in a safety stop response.
See also: p9611 (SI PROFIsafe telegram selection (Control Unit)), p60022 (PROFIsafe telegram selection)

Remedy: Match the telegram number in both parameters so that they are the same (p9611, p60022).

F01659 SI CU: Write request for parameter rejected

Message value: %1

Drive object: B_INF, VECTOR_G

Reaction: OFF2

Acknowledge: IMMEDIATELY (POWER ON)

Cause: The write request for one or several Safety Integrated parameters on the Control Unit (CU) was rejected.
Note:
This fault does not result in a safety stop response.
Fault value (r0949, interpret decimal):
1: The Safety Integrated password is not set.
2: A reset of the drive parameters was selected. However, the Safety Integrated parameters were not reset, as Safety Integrated is presently enabled.
3: The interconnected STO input is in the simulation mode.
10: An attempt was made to enable the STO function although this cannot be supported.
11: An attempt was made to enable the SBC function although this cannot be supported.
12: An attempt was made to enable the SBC function although this cannot be supported for a parallel circuit configuration (r9871.14).
13: An attempt was made to enable the SS1 function although this cannot be supported.
14: An attempt was made to enable the PROFIsafe communication - although this cannot be supported or the version of the PROFIsafe driver used on the CU and MM is different.
15: An attempt was made to enable the motion monitoring functions integrated in the drive although these cannot be supported.
16: An attempt was made to enable the STO function although this cannot be supported when the internal voltage protection (p1231) is enabled.
17: An attempt was made to enable the PROFIsafe function although this cannot be supported for a parallel circuit configuration.
18: An attempt was made to enable the PROFIsafe function for Basic Functions although this cannot be supported.
19: An attempt was made to enable the SBA (Safe Brake Adapter), although this cannot be supported.
20: An attempt was made to enable the motion monitoring functions integrated in the drive and the STO function, both controlled via F-DI.
21: An attempt was made to enable the motion monitoring functions integrated in the drive for a parallel connection, although these cannot be supported.
22: An attempt was made to enable the Safety Integrated functions although these cannot be supported by the connected Power Module.
23: For ESR, an attempt was made to enable the delay for pulse suppression, although this cannot be supported.
24: An attempt was made to enable the SBC function, although no power unit data set is set for the brake control (p7015 = 99).
25: An attempt was made to parameterize a PROFIsafe telegram although this cannot be supported.
26: At a digital input of the Control Unit, an attempt was made to activate the simulation mode (p0795), which is used by Safety Integrated (p10049).
33: An attempt was made to enable the motion monitoring functions without selection integrated in the drive (p9601.5, p9801.5), although this cannot be supported.
See also: p0970, p3900, r9771, r9871

Remedy: For fault value = 1:
- set the Safety Integrated password (p9761).
For fault value = 2:
- Inhibit Safety Integrated (p9501, p9601) or reset safety parameters (p0970 = 5), then reset the drive parameters again.
For fault value = 3:
- end the simulation mode for the digital input (p0795).
Re fault value = 10, 11, 12, 13, 14, 15, 17, 18, 19, 21, 22 , 23:
- check whether there are faults in the safety function alignment between the Control Unit and the Motor Module involved (F01655, F30655) and if required, carry out diagnostics for the faults involved.
- use a Motor Module that supports the required function.
- upgrade the Motor Module software.
- upgrade the Control Unit software.

© Siemens AG 2012 All Rights Reserved

For fault value = 16:
- inhibit the internal voltage protection (p1231).
For fault value = 20:
- correct setting in p9601.
For fault value = 22:
- use a Power Module that supports the Safety Integrated functions.
For fault value = 24:
- set the power unit data set for the holding brake (p7015).
For fault value = 25:
- use a Power Module that supports the PROFIsafe telegram selection.
- Correct the telegram number setting (p9611).
For fault value = 26:
- check whether p10049 is set. Also check p10006 and p10009. Check whether in p10046, p10047 a test top of the FDO with a read back input is parameterized.
- correct the setting in p9611.
For fault value = 33:
- Deselect motion monitoring functions without selection integrated in drive (p9601.5, p9801.5) and select safety functions that are supported (see p9771/p9871),
or:
- use a Motor Module that supports the required function.
- upgrade the Motor Module software.
- upgrade the Control Unit software.
Note:
CU: Control Unit
ESR: Extended Stop and Retract
MM: Motor Module
SBA: Safe Brake Adapter
SBC: Safe Brake Control
SI: Safety Integrated
SS1: Safe Stop 1 (corresponds to Stop Category 1 acc. to EN60204)
STO: Safe Torque Off / SH: Safe standstill
See also: p9501 (SI Motion enable safety functions (Control Unit)), p9601 (SI enable, functions integrated in the drive (Control Unit)), p9620 (SI signal source for STO (SH)/SBC/SS1 (Control Unit)), p9761 (SI password input), p9801 (SI enable, functions integrated in the drive (Motor Module))

F01659 SI CU: Write request for parameter rejected

Message value: %1

Drive object: TM54F_MA, TM54F_SL

Reaction: OFF2

Acknowledge: IMMEDIATELY (POWER ON)

Cause: The write request for one or several Safety Integrated parameters on the Control Unit (CU) was rejected.
Note:
This fault does not result in a safety stop response.
Fault value (r0949, interpret decimal):
1: The Safety Integrated password is not set.
2: A reset of the drive parameters was selected. However, the Safety Integrated parameters were not reset, as Safety Integrated is presently enabled.
3: The interconnected STO input is in the simulation mode.
10: An attempt was made to enable the STO function although this cannot be supported.
11: An attempt was made to enable the SBC function although this cannot be supported.
12: An attempt was made to enable the SBC function although this cannot be supported for a parallel circuit configuration (r9871.14).
13: An attempt was made to enable the SS1 function although this cannot be supported.
14: An attempt was made to enable the PROFIsafe communication - although this cannot be supported or the version of the PROFIsafe driver used on the CU and MM is different.
15: An attempt was made to enable the motion monitoring functions integrated in the drive although these cannot be supported.
16: An attempt was made to enable the STO function although this cannot be supported when the internal voltage protection (p1231) is enabled.
17: An attempt was made to enable the PROFIsafe function although this cannot be supported for a parallel circuit configuration.
18: An attempt was made to enable the PROFIsafe function for Basic Functions although this cannot be supported.

© Siemens AG 2012 All Rights Reserved

19: An attempt was made to enable the SBA (Safe Brake Adapter), although this cannot be supported.
20: An attempt was made to enable the motion monitoring functions integrated in the drive and the STO function, both controlled via F-DI.
21: An attempt was made to enable the motion monitoring functions integrated in the drive for a parallel connection, although these cannot be supported.
22: An attempt was made to enable the Safety Integrated functions although these cannot be supported by the connected Power Module.
23: For ESR, an attempt was made to enable the delay for pulse suppression, although this cannot be supported.
24: An attempt was made to enable the SBC function, although no power unit data set is set for the brake control (p7015 = 99).
25: An attempt was made to parameterize a PROFIsafe telegram although this cannot be supported.
26: At a digital input of the Control Unit, an attempt was made to activate the simulation mode (p0795), which is used by Safety Integrated (p10049).
33: An attempt was made to enable the motion monitoring functions without selection integrated in the drive (p9601.5, p9801.5), although this cannot be supported.
See also: p0970, p3900, r9771, r9871

Remedy: For fault value = 1:
- set the Safety Integrated password (p10061).
For fault value = 2:
- Inhibit Safety Integrated (p9501, p9601) or reset safety parameters (p0970 = 5), then reset the drive parameters again.
For fault value = 3:
- end the simulation mode for the digital input (p0795).
Re fault value = 10, 11, 12, 13, 14, 15, 17, 18, 19, 21, 22 , 23:
- check whether there are faults in the safety function alignment between the Control Unit and the Motor Module involved (F01655, F30655) and if required, carry out diagnostics for the faults involved.
- use a Motor Module that supports the required function.
- upgrade the Motor Module software.
- upgrade the Control Unit software.
For fault value = 16:
- inhibit the internal voltage protection (p1231).
For fault value = 20:
- correct setting in p9601.
For fault value = 22:
- use a Power Module that supports the Safety Integrated functions.
Note:
CU: Control Unit
ESR: Extended Stop and Retract
MM: Motor Module
SBA: Safe Brake Adapter
SBC: Safe Brake Control
SI: Safety Integrated
SS1: Safe Stop 1 (corresponds to Stop Category 1 acc. to EN60204)
STO: Safe Torque Off / SH: Safe standstill
See also: p9501 (SI Motion enable safety functions (Control Unit)), p9601 (SI enable, functions integrated in the drive (Control Unit)), p9620 (SI signal source for STO (SH)/SBC/SS1 (Control Unit)), p9761 (SI password input), p9801 (SI enable, functions integrated in the drive (Motor Module))

F01660 SI CU: Safety-related functions not supported

Message value: -

Drive object: VECTOR_G

Reaction: OFF2

Acknowledge: IMMEDIATELY (POWER ON)

Cause: The Motor Module (MM) does not support the safety-related functions (e.g. the Motor Module version is not the correct one). Safety Integrated cannot be commissioned.
Note:
This fault does not result in a safety stop response.

Remedy: - use a Motor Module that supports the safety-related functions.
- upgrade the Motor Module software.
Note:
CU: Control Unit

© Siemens AG 2012 All Rights Reserved

MM: Motor Module
SI: Safety Integrated

F01661 SI CU: Simulation of the safety inputs active

Message value: Fault cause: %1 bin

Drive object: VECTOR_G

Reaction: OFF2

Acknowledge: IMMEDIATELY

Cause: The simulation of the digital inputs of the Control Unit (p0795) is active.
It is not permissible that safety inputs (refer to p9620, p10022 ... p10032) are simulated.
Fault value (r0949, interpret binary):
The display bits indicate which DIs may not be simulated.

Remedy: Deactivate the simulation of the digital inputs of the Control Unit
for the safety inputs (refer to p795) and acknowledge the fault.

F01663 SI CU: Copying the SI parameters rejected

Message value: -

Drive object: VECTOR_G

Reaction: OFF2

Acknowledge: IMMEDIATELY (POWER ON)

Cause: One of the following values is saved in p9700 or was entered offline: 87 or 208.
This is the reason that when booting, an attempt is made to copy SI parameters from the Control Unit to the Motor Module. However, no safety-relevant function has been selected on the Control Unit (p9501 = 0, p9601 = 0). Copying was rejected for safety reasons.
As a consequence, inconsistent parameterization can occur in both monitoring channels, which in turn results in additional error messages.
Especially for inconsistent enabling of the safety functions on both monitoring channels (p9601 = 0, p9801 <> 0), fault F30625 is output.
Note:
This fault does not result in a safety stop response.
See also: p9700 (SI Motion copy function)

Remedy: - Set p9700 to 0.
- Check p9501 and p9601 and if required, correct.
- Restart the copying function by entering the corresponding value into p9700.
Alternatively, using the STARTER commissioning tool, perform the following steps in the online mode:
- Call the "Safety Integrated" screen form (the field "Select safety functions" is at "No Safety Integrated").
- Click on "Change settings".
- Click on "Activate settings" (as a consequence, Safety Integrated is inhibited on both monitoring channels).
- save all parameters (p0977 = 1 or "copy RAM to ROM").
- carry out a POWER ON (power off/on) for all components.

F01664 SI CU: No automatic firmware update

Message value: %1

Drive object: VECTOR_G

Reaction: OFF2

Acknowledge: IMMEDIATELY (POWER ON)

Cause: During booting, the system detected that the "Firmware update automatic" function (p7826 = 1) was not activated.
This function must be activated for automatic firmware updates/downgrades to prevent impermissible version combinations when safety functions are enabled.
Note:
This fault does not result in a safety stop response.
See also: p7826 (Firmware update automatic)

Remedy: When safety functions are enabled (p9501 <> 0 and/or p9601 <> 0):
1. Activate the "Firmware update automatic" function (p7826 = 1).
2. Save the parameters (p0977 = 1) and carry out a POWER ON.
When de-activating the safety functions (p9501 = 0, p9601 = 0), the fault can be acknowledged after exiting the safety commissioning mode.

© Siemens AG 2012 All Rights Reserved

F01665 SI CU: System is defective

Message value: %1

Drive object: VECTOR_G

Reaction: OFF2

Acknowledge: IMMEDIATELY

Cause: A system defect was detected before the last boot or in the actual one. The system might have been rebooted (reset).
Fault value (r0949, interpret hexadecimal):
200000 hex, 400000 hex, 8000yy hex (yy any):
- Fault in the actual booting/operation.
800004 hex:
- Parameters p9500/p9300 are, under certain circumstances, not the same. In addition, Safety message C01711/C30711 is displayed.
Additional values:
- defect before the last time that the system booted.

Remedy: - carry out a POWER ON (power off/on).
- upgrade firmware to later version.
- contact the Hotline.
Re fault value = 200000 hex, 400000 hex, 8000yy hex (yy any):
- ensure that the Control Unit is connected to the Power Module.
Re fault value = 800004 hex:
- Check that parameters p9500/p9300 are the same.

A01666 (F) SI Motion CU: Steady-state (static) 1 signal at the F-DI for safety-relevant acknowledgement

Message value: -

Drive object: VECTOR_G

Reaction: NONE

Acknowledge: NONE

Cause: A logical 1 signal is present at the F-DI configured in p10006 for more than 10 seconds.
If, at the F-DI no acknowledgment was performed for safe acknowledgment, then a steady-state logical and 0 signal must be present. This avoids unintentional safety-relevant acknowledgement (or the "Internal Event Acknowledge" signal) if a wire breaks or one of the two digital inputs bounces.

Remedy: Set the fail-safe digital input (F-DI) to a logical 0 signal (p10006).
Note:
F-DI: Failsafe Digital Input

Reaction upon F: NONE

Acknowl. upon F: IMMEDIATELY

A01669 (F, N) SI Motion: Unfavorable combination of motor and power unit

Message value: %1

Drive object: VECTOR_G

Reaction: NONE

Acknowledge: NONE

Cause: The combination of motor and power unit used is not suitable for using safe motion monitoring functions without an encoder.
The ratio between the power unit rated current (r0207[0]) and rated motor current (p0305) is greater than 5.
Alarm value (r2124, interpret decimal):
Number of the motor data set, which caused the fault.
Notice:
If this alarm is not observed, then message C01711 or C30711 – with the value 1041 ... 1044 – can sporadically occur.

Remedy: Use a suitable power unit with a lower power rating or a motor with a higher power rating.

Reaction upon F: NONE (OFF1, OFF2, OFF3)

Acknowl. upon F: IMMEDIATELY (POWER ON)

Reaction upon N: NONE

Acknowl. upon N: NONE

© Siemens AG 2012 All Rights Reserved

F01670 SI Motion: Invalid parameterization Sensor Module

Message value: %1

Drive object: VECTOR_G

Reaction: OFF2

Acknowledge: IMMEDIATELY (POWER ON)

Cause: The parameterization of a Sensor Module used for Safety Integrated is not permissible.
Note:
This fault results in a STOP A that cannot be acknowledged.
Fault value (r0949, interpret decimal):
1: No encoder was parameterized for Safety Integrated.
2: An encoder was parameterized for Safety Integrated that does not have an A/B track (sine/cosine).
3: The encoder data set selected for Safety Integrated is still not valid.
4: A communication error with the encoder has occurred.
5: Number of relevant bits in the encoder coarse position invalid.
6: DRIVE-CLiQ encoder configuration invalid.
7: Non-safety relevant component of the encoder coarse position for the linear DRIVE-CLiQ encoder not valid.
8: Parameterized Safety comparison algorithm not supported.
9: Relationship between the grid division and measuring step for linear DRIVE-CLiQ encoder is not binary.
10: For an encoder used for Safety Integrated, not all of the Drive Data Sets (DDS) are assigned to the same Encoder Data Set (EDS) (p0187 ... p0189).

Remedy: Re fault value = 1, 2:
- use and parameterize an encoder that Safety Integrated supports (encoder with track A/B sine-wave, p0404.4 = 1).
For fault value = 3:
- check whether the drive or drive commissioning function is active and if required, exit this (p0009 = p00010 = 0), save the parameters (p0971 = 1) and carry out a POWER ON
For fault value = 4:
- check whether there is a DRIVE-CLiQ communication error between the Control Unit and the Sensor Module involved and if required, carry out a diagnostics routine for the faults identified.
For fault value = 5:
- p9525 = 0 (not permissible). Check the encoder parameterization on the Sensor Modules involved.
For fault value = 6:
- check p9515.0 (for DRIVE-CLiQ encoders, the following applies: p9515.0 = 1). Check the encoder parameterization on the Sensor Modules involved.
For fault value = 7:
- p12033 for an encoder used for Safety Integrated is not equal to 1. Use a linear DRIVE-CLiQ and parameterize for p12033 = 1.
For fault value = 8:
- check p9541. Use and parameterize an encoder that implements an algorithm supported by Safety Integrated.
For fault value = 9:
- check p9514 and p9522. Use an encoder and parameterize, where the ratio between p9514 and p9522 is binary.
For fault value = 10:
- align the EDS assignment of all of the encoders used for Safety Integrated (p0187 ... p0189).
For fault value = 11:
- p12036 for an encoder used for Safety Integrated is not equal to 0. Use a linear DRIVE-CLiQ and parameterize for p12036 = 0.
Note:
SI: Safety Integrated

F01671 SI Motion: Parameterization encoder error

Message value: %1

Drive object: VECTOR_G

Reaction: OFF2

Acknowledge: IMMEDIATELY (POWER ON)

Cause: The parameterization of the encoder used by Safety Integrated is different to the parameterization of the standard encoder.
Note:
This fault does not result in a safety stop response.
Fault value (r0949, interpret decimal):
Parameter number of the non-corresponding safety parameter.

© Siemens AG 2012 All Rights Reserved

Remedy: Align the encoder parameterization between the safety encoder and the standard encoder.
Note:
SI: Safety Integrated

F01672 SI CU: Motor Module software/hardware incompatible

Message value: %1
Drive object: VECTOR_G
Reaction: OFF2
Acknowledge: IMMEDIATELY (POWER ON)
Cause: The existing Motor Module software does not support safe motion monitoring or is not compatible to the software on the Control Unit or there is a communications error between the Control Unit and Motor Module.
Note:
This fault results in a STOP A that cannot be acknowledged.
Fault value (r0949, interpret decimal):
1: The existing Motor Module software does not support the safe motion monitoring function.
2, 3, 6, 8: There is a communications error between the Control Unit and Motor Module.
4, 5, 7: The existing Motor Module software is not compatible to the software on the Control Unit.
9,10,11,12: The actual Motor Module software does not support safe encoderless motion monitoring.
13: At least one Motor Module in parallel operation does not support the safe motion monitoring function.
Remedy: - check whether there are faults in the safety function alignment between the Control Unit and the Motor Module involved (F01655, F30655) and if required, carry out diagnostics for the faults involved.
For fault value = 1:
- use a Motor Module that supports safe motion monitoring.
Re fault value = 2, 3, 6, 8:
- check whether there is a DRIVE-CLiQ communication error between the Control Unit and the Motor Module involved and, if required, carry out a diagnostics routine for the faults identified.
Re fault value = 4, 5, 7, 9, 13:
- upgrade the Motor Module software.
Note:
SI: Safety Integrated

F01673 SI Motion: Sensor Module software/hardware incompatible

Message value: %1
Drive object: VECTOR_G
Reaction: OFF2
Acknowledge: IMMEDIATELY (POWER ON)
Cause: The existing Sensor Module software and/or hardware does not support the safe motion monitoring function with the higher-level control.
Note:
This fault does not result in a safety stop response.
Fault value (r0949, interpret decimal):
Only for internal Siemens troubleshooting.
Remedy: - upgrade the Sensor Module software.
- use a Sensor Module that supports the safe motion monitoring function.
Note:
SI: Safety Integrated

F01674 SI Motion CU: Safety function not supported by PROFIsafe telegram

Message value: %1
Drive object: VECTOR_G
Reaction: OFF2
Acknowledge: POWER ON
Cause: The monitoring function enabled in p9501 and p9601 is not supported by the currently set PROFIsafe telegram (p9611).
Note:
This fault results in a STOP A that cannot be acknowledged.
Fault value (r0949, interpret bitwise binary):
Bit 24 = 1:
Transfer SLS (SG) limit value via PROFIsafe not supported (p9501.24).

© Siemens AG 2012 All Rights Reserved

Bit 25 = 1:
Transfer safe position via PROFIsafe is not supported (p9501.25).

Remedy: - Deselect the monitoring function involved (p9501, p9601).
- set the matching PROFIsafe telegram (p9611).
Note:
SI: Safety Integrated
SLS: Safely-Limited Speed / SG: Safely reduced speed
SP: Safe Position

F01680 SI Motion CU: Checksum error safety monitoring functions

Message value: %1

Drive object: VECTOR_G

Reaction: OFF2

Acknowledge: IMMEDIATELY (POWER ON)

Cause: The actual checksum calculated by the drive and entered in r9728 via the safety-relevant parameters does not match the reference checksum saved in p9729 at the last machine acceptance.
Safety-relevant parameters have been changed or a fault is present.
Note:
This fault results in a STOP A that can be acknowledged.
Fault value (r0949, interpret decimal):
0: Checksum error for SI parameters for motion monitoring.
1: Checksum error for SI parameters for actual values.
2: Checksum error for SI parameters for component assignment.

Remedy: - check the safety-relevant parameters and if required, correct.
- execute the function "Copy RAM to ROM".
- perform a POWER ON if safety parameters requiring a POWER ON have been modified.
- carry out an acceptance test.

F01681 SI Motion CU: Incorrect parameter value

Message value: Parameter: %1, supplementary information: %2

Drive object: VECTOR_G

Reaction: OFF2

Acknowledge: IMMEDIATELY (POWER ON)

Cause: The parameter cannot be parameterized with this value.
Note:
This fault does not result in a safety stop response.
Fault value (r0949, interpret decimal):
yyyyxxxx dec:
yyyy = supplementary information,
xxxx = parameter
yyyy = 0: no additional information available.
xxxx = 9500:
p9500 is not equal to p9300 or not an integer multiple of the sampling time of the current controller (p0115[0]).
xxxx = 9501:
It is not permissible to enable the function "n<nx hysteresis and filtering" (p9501.16) in conjunction with the function "extended functions without selection" (p9601.5).
xxxx = 9505:
When SLP is active (p9501.1 = 1), the modulo function is activated and this is not permitted (p9505 not equal to 0).
xxxx = 9511:
yyyy = 1:
p9511 is not equal to p9311.
yyyy = 2:
On a double axis motor module, between the drive objects, no different values in p9511 and p0115[0] is permitted.
xxxx = 9522:
The gear stage was set too high.
xxxx = 9544:
For linear axes, the maximum value is limited to 1 mm.
xxxx = 9547:
p9547 is too low.
xxxx = 9585:
For Safety without encoder and synchronous motor, a value of 4 must be entered into p9585.

© Siemens AG 2012 All Rights Reserved

xxxx = 9601:
yyyy = 1:
If motion monitoring functions integrated in the drive (p9601.2 = 1) and extended functions without selection (p9601.5 = 1) are enabled, then PROFIsafe (p9601.3 = 1) or onboard F-DI (p9601.4 = 1) is not possible.
yyyy = 2:
Extended functions without selection (p9601.5 =1) are enabled, without enabling motion monitoring functions integrated in the drive (p9601.2).
yyyy = 3:
Onboard F-DI are enabled, without enabling motion monitoring functions integrated in the drive (p9601.2).
yyyy = 4:
Onboard F-DI are enabled, then it is not permissible to simultaneously set PROFIsafe and F-DI via PROFIsafe (p9501.30).
yyyy = 5:
Transfer of the SLS limit value via PROFIsafe (p9501.24) has been enabled, without enabling PROFIsafe.
yyyy = 6:
Transfer of the safe position via PROFIsafe (p9501.25) has been enabled, without enabling PROFIsafe.

Remedy:

Correct parameter (if required, also on the second monitoring channel, p9801).
xxxx: parameter,
yyyy: supplementary information.
xxxx = 9500:
- Transfer of the safe position via PROFIsafe (p9501.25) has been enabled, without enabling PROFIsafe.
Set p9500 "SI Motion monitoring clock cycle" as an integer multiple of p115[0] "Current controller sampling time".
Align parameters 9300 and 9500, backup parameters (p0971 = 1) and carry out a POWER ON.
With hysteresis/filtering enabled (p9501.16 = 1), the following applies:
- Set parameters p9546/p9346 and p9547/p9347 acc. to the following rule: p9546 >= 2 x p9547; p9346 >= 2 x p9347.
- The following rule must also be adhered to when actual value synchronization (p9501.3 = 1) is enabled: p9549 <= p9547; p9349 <= p9347.
xxxx = 9501:
- Correct parameters p9501.16 and p9301.16, or deselect the extended functions without selection (p9601.5).
xxxx = 9505:
Correct parameter p9501.1 or p9505.
xxxx = 9507:
Set synchronous or induction motor according to p0300.
xxxx = 9511:
Align parameters p9311 and p9511, backup parameters (p0971 = 1) and carry out a POWER ON.
xxxx = 9517:
Also check p9516.0.
xxxx = 9522:
Correct parameters.
xxxx = 9544:
Correct parameter (for linear axes, the maximum value is limited to 1 mm).
xxxx = 9585:
Correct parameter (if required, also on the second monitoring channel, p9385).
xxxx = 9601:
yyyy = 1:
Only enable motion monitoring functions integrated in the drive (p9601.2 = 1) and extended functions without selection (p9601.5 = 1), or only enable PROFIsafe (p9601.3 = 1) or only onboard F-DI (p9601.4 = 1).
yyyy = 2, 3:
Enable motion monitoring functions integrated in the drive (p9601.2 = 1).
yyyy = 4:
If onboard F-DI are enabled, then it is not permissible to simultaneously set PROFIsafe and F-DI via PROFIsafe (p9501.30), deselect PROFIsafe functionality or onboard F-DI.
yyyy = 5:
To transfer the SLS limit values via PROFIsafe (p9501.24 = 1), also enable PROFIsafe (p9601.3 =1) and motion monitoring functions integrated in the drive (p9601.2 = 1).
yyyy = 6:
For the safe position via PROFIsafe (p9501.25 = 1), also enable PROFIsafe (p9601.3 =1) and motion monitoring functions integrated in the drive (p9601.2 = 1).

© Siemens AG 2012 All Rights Reserved

F01682 SI Motion CU: Monitoring function not supported

Message value: %1

Drive object: VECTOR_G

Reaction: OFF2

Acknowledge: IMMEDIATELY (POWER ON)

Cause: The monitoring function enabled in p9501, p9601, p9801, p9307 or p9507 is not supported in this firmware version.
Note:
This fault results in a STOP A that cannot be acknowledged.
Fault value (r0949, interpret decimal):
1: Monitoring function SLP not supported (p9501.1).
2: Monitoring function SCA not supported (p9501.7 and p9501.8 ... 15 and p9503).
3: Monitoring function SLS override not supported (p9501.5).
4: Monitoring function external ESR activation not supported (p9501.4).
5: Monitoring function F-DI in PROFIsafe not supported (p9501.30).
6: Enable actual value synchronization not supported (p9501.3).
9: Monitoring function not supported by the firmware or enable bit not used.
10: Monitoring functions only supported for a SERVO drive object.
11: Encoderless monitoring functions (p9506.1) only supported for motion monitoring integrated in the drive (p9601.2).
12: Monitoring functions for ncSI are not supported for CU305.
20: Motion monitoring functions integrated in the drive are only supported in conjunction with PROFIsafe (p9501, p9601.1 ... 2 and p9801.1 ... 2).
21: Enable a safe motion monitoring function (in p9501), not supported for enabled basic functions via PROFIsafe (p9601.2 = 0, p9601.3 = 1).
22: Encoderless monitoring functions in "chassis" format not supported.
23: CU240 does not support monitoring functions requiring an encoder.
24: Monitoring function SDI not supported (p9501.17).
25: Drive-integrated motion monitoring functions not supported (p9501, p9601.2).
26: hysteresis and filtering for SSM monitoring function without an encoder not supported (p9501.16).
27: This hardware does not support onboard F-DI and F-DO.
29: SINAMICS S120M: SSM encoderless not supported.
31: This hardware does not support transfer SLS (SG) limit value via PROFIsafe (p9301/p9501.24).
33: Safety functions without selection not supported (p9601.5, p9801.5).
34: This module does not support safe position via PROFIsafe.
36: Function "SS1 without OFF3" not supported.
40: SIMOTION D410-2: Motion monitoring functions integrated in the drive or PROFIsafe control not supported.
41: SIMOTION D410-2: Safety functions not supported for the "Chassis" format.
42: Motion monitoring functions SLP and SP not supported for D4x5-2 and CX32-2 (p9501.1, 25).
43: Motion monitoring functions SLP and SP as well as PROFIsafe telegrams 31/901/902 not supported for D410 (p9501.1, 24, 25, 30 / 9611).
9586: Set value of p9586/p9386 is greater than the supported maximum value.
9588: Set value of p9588/p9388 is greater than the supported maximum value.
9589: Set value of p9589/p9389 is greater than the supported maximum value.

Remedy: - De-select the monitoring function involved (p9501, p9503, p9506, p9601, p9801, p9307, p9507).
- Reduce the set value (p9586 , p9588 , p9589).
Note:
ESR: Extended Stop and Retract
SCA: Safe Cam / SN: Safe software cam
SDI: Safe Direction (safe motion direction)
SI: Safety Integrated
SLP: Safely-Limited Position / SE: Safe software limit switches
SLS: Safely-Limited Speed / SG: Safely reduced speed
SP: Safe Position
See also: p9501 (SI Motion enable safety functions (Control Unit)), p9503 (SI Motion SCA (SN) enable (Control Unit)), r9771 (SI common functions (Control Unit))

© Siemens AG 2012 All Rights Reserved

F01683 SI Motion CU: SOS/SLS enable missing

Message value: -

Drive object: VECTOR_G

Reaction: OFF2

Acknowledge: IMMEDIATELY (POWER ON)

Cause: The safety-relevant basic function "SOS/SLS" is not enabled in p9501 although other safety-relevant monitoring functions are enabled.
Note:
This fault does not result in a safety stop response.

Remedy: Enable the function "SOS/SLS" (p9501.0) and carry out a POWER ON.
Note:
SI: Safety Integrated
SLS: Safely-Limited Speed / SG: Safely reduced speed
SOS: Safe Operating Stop / SBH: Safe operating stop
See also: p9501 (SI Motion enable safety functions (Control Unit))

F01684 SI Motion: Safely limited position limit values interchanged

Message value: %1

Drive object: VECTOR_G

Reaction: OFF2

Acknowledge: IMMEDIATELY (POWER ON)

Cause: For the function "Safely-Limited Position" (SE), a lower value is in p9534 than in p9535.
Note:
This fault does not result in a safety stop response.
Fault value (r0949, interpret decimal):
1: Limit values SLP1 interchanged.
2: Limit values SLP2 interchanged.

Remedy: Correct the limit values in p9534 and p9535 and carry out a POWER ON.
Note:
SI: Safety Integrated
SLP: Safely-Limited Position / SE: Safe software limit switches

F01685 SI Motion CU: Safely-limited speed limit value too high

Message value: %1

Drive object: VECTOR_G

Reaction: OFF2

Acknowledge: IMMEDIATELY (POWER ON)

Cause: The limit value for the function "Safely-Limited Speed" (SLS) is greater than the speed that corresponds to an encoder limit frequency of 500 kHz.
Note:
This fault does not result in a safety stop response.
Fault value (r0949, interpret decimal):
Maximum permissible speed.

Remedy: Correct the limit values for SLS and carry out a POWER ON.
Note:
SI: Safety Integrated
SLS: Safely-Limited Speed / SG: Safely reduced speed
See also: p9531 (SI Motion SLS (SG) limit values (Control Unit))

F01686 SI Motion: Illegal parameterization cam position

Message value: %1

Drive object: VECTOR_G

Reaction: OFF2

Acknowledge: IMMEDIATELY (POWER ON)

Cause: At least one enabled "Safety Cam" (SCA) is parameterized in p9536 or p9537 too close to the tolerance range around the modulo position.

© Siemens AG 2012 All Rights Reserved

The following conditions must be complied with to assign cams to a cam track:
- the cam length of cam x = p9536[x]-p9537[x] must be greater or equal to the cam tolerance + the position tolerance (= p9540 + p9542). This also means that for cams on a cam track, the minus position value must be less than the plus position value.
- the distance between 2 cams x and y (minus position value[y] - plus position value[x] = p9537[y] - p9536[x]) on a cam track must be greater than or equal to the cam tolerance + position tolerance (= p9540 + p9542).
Note:
This fault does not result in a safety stop response.
Fault value (r0949, interpret decimal):
Number of the "Safe Cam" with an illegal position.
See also: p9501 (SI Motion enable safety functions (Control Unit))

Remedy: Correct the cam position and carry out a POWER ON.
Note:
SCA: Safe Cam / SN: Safe software cam
SI: Safety Integrated
See also: p9536 (SI Motion SCA (SN) plus cam position (Control Unit)), p9537 (SI Motion SCA (SN) plus cam position (Control Unit))

F01687 SI Motion: Illegal parameterization modulo value SCA (SN)

Message value: -

Drive object: VECTOR_G

Reaction: OFF2

Acknowledge: IMMEDIATELY (POWER ON)

Cause: The parameterized modulo value for the "Safe Cam" (SCA) function is not a multiple of 360 000 mDegrees.
Note:
This fault does not result in a safety stop response.

Remedy: Correct the modulo value for SCA and carry out a POWER ON.
Note:
SCA: Safe Cam / SN: Safe software cam
SI: Safety Integrated
See also: p9505 (SI Motion SP modulo value (Control Unit))

F01688 SI Motion CU: Actual value synchronization not permissible

Message value: -

Drive object: VECTOR_G

Reaction: OFF2

Acknowledge: IMMEDIATELY (POWER ON)

Cause: - It is not permissible to enable actual value synchronization for a 1-encoder system.
- It is not permissible to simultaneously enable actual value synchronization and a monitoring function with absolute reference (SCA/SLP).
- It is not permissible to simultaneously enable actual value synchronization and safe position via PROFIsafe.
Note:
This fault results in a STOP A that cannot be acknowledged.

Remedy: - Either select the "actual value synchronization" function or parameterize a 2-encoder system.
- Either de-select the function "actual value synchronization" or the monitoring functions with absolute reference (SCA/SLP) and carry out a POWER ON.
- Either deselect the "actual value synchronization" function or do not enable "Safe position via PROFIsafe".
Note:
SCA: Safe Cam / SN: Safe software cam
SI: Safety Integrated
SLP: Safely-Limited Position / SE: Safe software limit switches
SP: Safe Position
See also: p9501 (SI Motion enable safety functions (Control Unit)), p9526 (SI Motion encoder assignment second channel)

© Siemens AG 2012 All Rights Reserved

C01689 SI Motion: Axis re-configured

Message value: Parameter: %1

Drive object: VECTOR_G

Reaction: OFF2

Acknowledge: POWER ON

Cause: The axis configuration was changed (e.g. changeover between linear axis and rotary axis).
Parameter p0108.13 is internally set to the correct value.
Note:
This fault does not result in a safety stop response.
Fault value (r0949, interpret decimal):
Parameter number of parameter that initiated the change.
See also: p9502 (SI Motion axis type (Control Unit))

Remedy: The following should be carried out after the changeover:
- exit the safety commissioning mode (p0010).
- save all parameters (p0977 = 1 or "copy RAM to ROM").
- carry out a POWER ON.
Once the Control Unit has been switched on, safety message F01680 or F30680 indicates that the checksums in r9398[0] and r9728[0] have changed in the drive. The following must, therefore, be carried out:
- activate safety commissioning mode again.
- complete safety commissioning of the drive.
- exit the safety commissioning mode (p0010).
- save all parameters (p0977 = 1 or "copy RAM to ROM").
- carry out a POWER ON.
Note:
For the commissioning software, the units are only consistently displayed after a project upload.

F01690 SI Motion: Data save problem for the NVRAM

Message value: %1

Drive object: All objects

Reaction: Infeed: NONE (OFF1, OFF2)
Vector: NONE (OFF1, OFF2, OFF3)

Acknowledge: POWER ON

Cause: There is not sufficient memory space in the NVRAM on the drive to save parameters r9781 and r9782 (safety log-book).
Note:
This fault does not result in a safety stop response.
Fault value (r0949, interpret decimal):
0: There is no physical NVRAM available in the drive.
1: There is no longer any free memory space in the NVRAM.

Remedy: For fault value = 0:
- use a Control Unit NVRAM.
For fault value = 1:
- de-select functions that are not required and that take up memory space in the NVRAM.
- contact the Hotline.
Note:
NVRAM: Non-Volatile Random Access Memory (non-volatile read and write memory)

A01691 (F) SI Motion: Ti and To unsuitable for DP cycle

Message value: -

Drive object: VECTOR_G

Reaction: NONE

Acknowledge: NONE

Cause: The configured times for PROFIBUS communication are not permitted and the DP cycle is used as the actual value acquisition cycle for the safe movement monitoring functions.
Isochronous PROFIBUS:
The sum of Ti and To is too high for the selected DP cycle. The DP cycle should be at least 1 current controller cycle greater than the sum of Ti and To.
No isochronous PROFIBUS:
The DP clock cycle must be at least 4x the current controller clock cycle.

© Siemens AG 2012 All Rights Reserved

Notice:
If this alarm is not observed, then message C01711 or C30711 – with the value 1020 ... 1021 – can sporadically occur.

Remedy: Configure Ti and To low so that they are suitable for the DP cycle or increase the DP cycle time.
Alternative when SI monitoring integrated in the drive is enabled (p9601/p9801 > 0):
Use the actual value acquisition cycle p9511/p9311 and, in turn, set independently from DP cycle. The actual values sensing clock cycle must be at least 4x the current controller clock cycle. A clock cycle ratio of at least 8:1 is recommended.
See also: p9511 (SI Motion actual value sensing cycle clock (Control Unit))

Reaction upon F: NONE (OFF1, OFF2, OFF3)

Acknowl. upon F: IMMEDIATELY (POWER ON)

F01692 SI Motion CU: Parameter value not permitted for encoderless

Message value: Parameter: %1

Drive object: VECTOR_G

Reaction: OFF2

Acknowledge: IMMEDIATELY (POWER ON)

Cause: The parameter cannot be set to this value if encoderless motion monitoring functions have been selected in p9506.
Note:
This fault does not result in a safety stop response.
Fault value (r0949, interpret decimal):
Parameter number with the incorrect value.
See also: p9501 (SI Motion enable safety functions (Control Unit))

Remedy: - Correct the parameter specified in the fault value.
- If necessary, de-select encoderless motion monitoring functions (p9506).
See also: p9501 (SI Motion enable safety functions (Control Unit))

A01693 (F) SI CU: Safety parameter settings changed, warm restart/POWER ON required

Message value: %1

Drive object: B_INF, TM54F_MA, TM54F_SL, VECTOR_G

Reaction: NONE

Acknowledge: NONE

Cause: Safety parameters have been changed; these will only take effect following a warm restart or POWER ON.
Notice:
All changed parameters of the safety motion monitoring functions will only take effect following a warm restart or POWER ON.
Alarm value (r2124, interpret decimal):
Parameter number of the safety parameter which has changed, necessitating a warm restart or POWER ON.

Remedy: - carry out a warm restart (p0009 = 30, p0976 = 2, 3).
- carry out a POWER ON (power off/on) for all components.
Note:
Before performing an acceptance test, a POWER ON must be carried out for all components.

Reaction upon F: Infeed: NONE (OFF1, OFF2)
Vector: NONE (OFF1, OFF2, OFF3)

Acknowl. upon F: POWER ON

F01694 (A) SI Motion CU: Firmware version Motor Module older Control Unit

Message value: -

Drive object: VECTOR_G

Reaction: OFF2

Acknowledge: IMMEDIATELY (POWER ON)

Cause: The firmware version of the Motor Module is older than the version of the Control Unit.
It is possible that safety functions are not available (r9771/r9871).
Note:
This message does not result in a safety stop response.
This message can also occur, if after an automatic firmware update, a POWER ON was not carried out (Alarm A01007).

© Siemens AG 2012 All Rights Reserved

Remedy: Upgrade the firmware of the Motor Module to a later version.
See also: r9390 (SI Motion version safety motion monitoring (Motor Module)), r9590 (SI Motion version safety motion monitoring (Control Unit))

Reaction upon A: NONE

Acknowl. upon A: NONE

A01695 (F) SI Motion: Sensor Module was replaced

Message value: %1

Drive object: VECTOR_G

Reaction: NONE

Acknowledge: NONE

Cause: A Sensor Module, which is used for safe motion monitoring functions, was replaced. The hardware replacement must be acknowledged. An acceptance test must be subsequently performed.
Note:
This message does not result in a safety stop response.

Remedy: Carry out the following steps using the STARTER commissioning software:
- press the "Acknowledge hardware replacement" button in the safety screen form.
- execute the function "Copy RAM to ROM".
- carry out a POWER ON (power off/on) for all components.

As an alternative, carry out the following steps in the expert list of the commissioning software:
- start the copy function for the node identifier on the drive (p9700 = 1D hex).
- acknowledge the hardware CRC on the drive (p9701 = EC hex).
- save all parameters (p0977 = 1).
- carry out a POWER ON (power off/on) for all components.

Then carry out an acceptance test (refer to the Safety Integrated Function Manual).
For SINUMERIK, the following applies:
HMI supports the replacement of components with Safety functions (operating area "Diagnostics" --> Softkey "Alarm list" --> Softkey "Confirm SI HW" etc.).
The precise procedure is given in the following document:
SINUMERIK Function Manual Safety Integrated
See also: p9700 (SI Motion copy function), p9701 (Acknowledge SI motion data change)

Reaction upon F: NONE (OFF1, OFF2, OFF3)

Acknowl. upon F: IMMEDIATELY (POWER ON)

A01696 (F) SI Motion: Testing of the motion monitoring functions selected when booting

Message value: -

Drive object: VECTOR_G

Reaction: NONE

Acknowledge: NONE

Cause: The test of the motion monitoring functions was already illegally active when booting.
This is the reason that the test is only carried out again after selecting the forced checking procedure parameterized in p9705.
Note:
This message does not result in a safety stop response.
See also: p9705 (SI Motion: Test stop signal source)

Remedy: De-select the forced checking procedure of the safety motion monitoring functions and then select again.
The signal source for initiation is parameterized in binector input p9705.
Notice:
It is not permissible to use TM54F inputs to start the test stop.
Note:
SI: Safety Integrated
See also: p9705 (SI Motion: Test stop signal source)

Reaction upon F: NONE (OFF1, OFF2, OFF3)

Acknowl. upon F: IMMEDIATELY (POWER ON)

© Siemens AG 2012 All Rights Reserved

A01697 (F) SI Motion: Motion monitoring functions must be tested

Message value: -

Drive object: VECTOR_G

Reaction: NONE

Acknowledge: NONE

Cause: The time set in p9559 for the forced checking procedure of the safety motion monitoring functions has been exceeded. A new test is required.
After next selecting the forced checking procedure parameterized in p9705, the message is withdrawn and the monitoring time is reset.
Note:
- This message does not result in a safety stop response.
- As the shutdown paths are not automatically checked during booting, an alarm is always issued once booting is complete.
- The test must be performed within a defined, maximum time interval (p9559, maximum of 9000 hours) in order to comply with the requirements as laid down in the standards for timely fault detection and the conditions to calculate the failure rates of safety functions (PFH value). Operation beyond this maximum time period is permissible if it can be ensured that the forced checking procedure is performed before persons enter the hazardous area and who are depending on the safety functions correctly functioning.
See also: p9559 (SI Motion forced checking procedure timer (Control Unit)), p9705 (SI Motion: Test stop signal source)

Remedy: Carry out the forced checking procedure of the safety motion monitoring functions.
The signal source for initiation is parameterized in binector input p9705.
Notice:
It is not permissible to use TM54F inputs to start the test stop.
Note:
SI: Safety Integrated
See also: p9705 (SI Motion: Test stop signal source)

Reaction upon F: NONE (OFF1, OFF2, OFF3)

Acknowl. upon F: IMMEDIATELY (POWER ON)

A01698 (F) SI CU: Commissioning mode active

Message value: -

Drive object: B_INF, TM54F_MA, VECTOR_G

Reaction: NONE

Acknowledge: NONE

Cause: The commissioning of the "Safety Integrated" function is selected.
This message is withdrawn after the safety functions have been commissioned.
Note:
- This message does not result in a safety stop response.
- In the safety commissioning mode, the "STO" function is internally selected.
See also: p0010

Remedy: Not necessary.
Note:
CU: Control Unit
SI: Safety Integrated

Reaction upon F: Infeed: NONE (OFF1, OFF2)
Vector: NONE (OFF1, OFF2, OFF3)

Acknowl. upon F: IMMEDIATELY (POWER ON)

A01699 (F) SI CU: Shutdown path must be tested

Message value: -

Drive object: VECTOR_G

Reaction: NONE

Acknowledge: NONE

Cause: The time set in p9659 for the forced checking procedure of the safety shutdown paths has been exceeded. The safety shutdown paths must be re-tested.
After the next time the "STO" function is de-selected, the message is withdrawn and the monitoring time is reset.

© Siemens AG 2012 All Rights Reserved

Note:
- This message does not result in a safety stop response.
- The test must be performed within a defined, maximum time interval (p9659, maximum of 9000 hours) in order to comply with the requirements as laid down in the standards for timely fault detection and the conditions to calculate the failure rates of safety functions (PFH value). Operation beyond this maximum time period is permissible if it can be ensured that the forced checking procedure is performed before persons enter the hazardous area and who are depending on the safety functions correctly functioning.
See also: p9659 (SI forced checking procedure timer)

Remedy: Select STO and then de-select again.
Note:
CU: Control Unit
SI: Safety Integrated
STO: Safe Torque Off / SH: Safe standstill

Reaction upon F: NONE (OFF1, OFF2, OFF3)

Acknowl. upon F: IMMEDIATELY (POWER ON)

C01700 SI Motion CU: STOP A initiated

Message value: -

Drive object: VECTOR_G

Reaction: OFF2

Acknowledge: IMMEDIATELY (POWER ON)

Cause: The drive is stopped via a STOP A (pulses are suppressed via the safety shutdown path of the Control Unit).
Possible causes:
- stop request from the second monitoring channel.
- pulses not suppressed after a parameterized time (p9557) after test stop selection.
- subsequent response to the message C01706 "SI Motion CU: SAM/SBR limit exceeded".
- subsequent response to the message C01714 "SI Motion CU: Safely-Limited Speed exceeded".
- subsequent response to the message C01701 "SI Motion CU: STOP B initiated".
- subsequent response to the message C01715 "SI Motion CU: Safely-limited position exceeded".
- subsequent response to the message C01716 "SI Motion CU: tolerance for safe motion direction exceeded".

Remedy: - remove the cause of the fault on the second monitoring channel.
- carry out a diagnostics routine for message C01706.
- carry out a diagnostics routine for message C01714.
- carry out a diagnostics routine for message C01701.
- carry out a diagnostics routine for message C01715.
- carry out a diagnostics routine for message C01716.
- check the value in p9557 (where available), increase the value if necessary, and carry out a POWER ON
- check the shutdown path of the Control Unit (check DRIVE-CLiQ communication if it has been implemented)
- replace the Motor Module/Power Module
- replace Control Unit.
This message can be acknowledged without a POWER ON as follows:
- motion monitoring functions integrated in the drive: via Terminal Module 54F (TM54F) or PROFIsafe
- motion monitoring functions with SINUMERIK: via the machine control panel in acceptance test mode only
Note:
SAM: Safe Acceleration Monitor (safe acceleration monitoring)
SBR: Safe Brake Ramp (safe brake ramp monitoring)
SI: Safety Integrated

C01701 SI Motion CU: STOP B initiated

Message value: -

Drive object: VECTOR_G

Reaction: NONE (OFF3)

Acknowledge: IMMEDIATELY (POWER ON)

Cause: The drive is stopped via a STOP B (braking along the OFF3 deceleration ramp).
As a result of this fault, after the time parameterized in p9556 has expired, or the speed threshold parameterized in p9560 has been undershot, message C01700 "STOP A initiated" is output.
Possible causes:
- stop request from the second monitoring channel.
- subsequent response to the message C01714 "SI Motion CU: Safely-Limited Speed exceeded".
- subsequent response to the message C01711 "SI Motion CU: Defect in a monitoring channel".

© Siemens AG 2012 All Rights Reserved

- subsequent response to the message C01707 "SI Motion CU: tolerance for safe operating stop exceeded".
- subsequent response to the message C01715 "SI Motion CU: Safely-limited position exceeded".
- subsequent response to the message C01716 "SI Motion CU: tolerance for safe motion direction exceeded".

Remedy:
- remove the cause of the fault on the second monitoring channel.
- carry out a diagnostics routine for message C01714.
- carry out a diagnostics routine for message C01711.
- carry out a diagnostics routine for message C01707.
- carry out a diagnostics routine for message C01715.
- carry out a diagnostics routine for message C01716.

This message can be acknowledged without a POWER ON as follows:
- motion monitoring functions integrated in the drive: via Terminal Module 54F (TM54F) or PROFIsafe
- motion monitoring functions with SINUMERIK: via the machine control panel in acceptance test mode only

Note:
SI: Safety Integrated

C01706 SI Motion CU: SAM/SBR limit exceeded

Message value: -

Drive object: VECTOR_G

Reaction: NONE

Acknowledge: IMMEDIATELY (POWER ON)

Cause:
Motion monitoring functions with encoder (p9506 = 0) or encoderless with set acceleration monitoring (p9506 = 3):
SAM - safe acceleration monitoring. After initiating STOP B (SS1) or STOP C (SS2), the speed has exceeded the selected tolerance.
Motion monitoring functions encoderless with set brake ramp monitoring (p9506 = 1):
SBR - Safe brake ramp monitoring. After initiating STOP B (SS1) or SLS changeover to the lower speed stage, the speed has exceeded the selected tolerance.
The drive is shut down by the message C01700 "SI Motion: STOP A initiated".

Remedy:
Check the braking behavior and, if necessary, adapt the tolerance for the "SAM" function or modify the parameter settings for the "SBR" function.
This message can be acknowledged without a POWER ON as follows:
- motion monitoring functions integrated in the drive: via Terminal Module 54F (TM54F) or PROFIsafe
- motion monitoring functions with SINUMERIK: via the machine control panel in acceptance test mode only

Note:
SAM: Safe Acceleration Monitor (safe acceleration monitoring)
SBR: Safe Brake Ramp (safe ramp monitoring)
SI: Safety Integrated
See also: p9548 (SI Motion SAM actual velocity tolerance (Control Unit)), p9581 (SI Motion brake ramp reference value (Control Unit)), p9582 (SI Motion brake ramp delay time (Control Unit)), p9583 (SI Motion brake ramp monitoring time (Control Unit))

C01707 SI Motion CU: Tolerance for safe operating stop exceeded

Message value: -

Drive object: VECTOR_G

Reaction: NONE

Acknowledge: IMMEDIATELY (POWER ON)

Cause:
The actual position has distanced itself further from the target position than the standstill tolerance.
The drive is shut down by the message C01701 "SI Motion: STOP B initiated".

Remedy:
- check whether safety faults are present and if required carry out the appropriate diagnostic routines for the particular faults.
- check whether the standstill tolerance matches the accuracy and control dynamic performance of the axis.
- carry out a POWER ON.

This message can be acknowledged without a POWER ON as follows:
- motion monitoring functions integrated in the drive: via Terminal Module 54F (TM54F) or PROFIsafe
- motion monitoring functions with SINUMERIK: via the machine control panel in acceptance test mode only

Note:
SI: Safety Integrated
SOS: Safe Operating Stop / SBH: Safe operating stop
See also: p9530 (SI Motion standstill tolerance (Control Unit))

© Siemens AG 2012 All Rights Reserved

C01708 SI Motion CU: STOP C initiated

Message value: -

Drive object: VECTOR_G

Reaction: STOP2

Acknowledge: IMMEDIATELY (POWER ON)

Cause: The drive is stopped via a STOP C (braking along the OFF3 deceleration ramp).
"Safe Operating Stop" (SOS) is activated after the parameterized time has expired.
Possible causes:
- stop request from the higher-level control.
- subsequent response to the message C01714 "SI Motion CU: Safely-Limited Speed exceeded".
- subsequent response to the message C01715 "SI Motion CU: Safely-limited position exceeded".
- subsequent response to the message C01716 "SI Motion CU: tolerance for safe motion direction exceeded".
See also: p9552 (SI Motion transition time STOP C to SOS (SBH) (Control Unit))

Remedy: - remove the cause of the fault at the control.
- carry out a diagnostics routine for message C01714/C01715/C01716.
This message can be acknowledged as follows:
- motion monitoring functions integrated in the drive: Via Terminal Module 54F (TM54F) or PROFIsafe
- motion monitoring functions with SINUMERIK: Via the machine control panel
Note:
SI: Safety Integrated
SOS: Safe Operating Stop / SBH: Safe operating stop

C01709 SI Motion CU: STOP D initiated

Message value: -

Drive object: VECTOR_G

Reaction: NONE

Acknowledge: IMMEDIATELY (POWER ON)

Cause: The drive is stopped via a STOP D (braking along the path).
"Safe Operating Stop" (SOS) is activated after the parameterized time has expired.
Possible causes:
- stop request from the higher-level control.
- subsequent response to the message C01714 "SI Motion CU: Safely-Limited Speed exceeded".
- subsequent response to the message C01715 "SI Motion CU: Safely-limited position exceeded".
- subsequent response to the message C01716 "SI Motion CU: tolerance for safe motion direction exceeded".
See also: p9553 (SI Motion transition time STOP D to SOS (SBH) (Control Unit))

Remedy: - remove the cause of the fault at the control.
- carry out a diagnostics routine for message C01714/C01715/C01716.
This message can be acknowledged as follows:
- motion monitoring functions integrated in the drive: Via Terminal Module 54F (TM54F) or PROFIsafe
- motion monitoring functions with SINUMERIK: Via the machine control panel
Note:
SI: Safety Integrated
SOS: Safe Operating Stop / SBH: Safe operating stop

C01710 SI Motion CU: STOP E initiated

Message value: -

Drive object: VECTOR_G

Reaction: NONE

Acknowledge: IMMEDIATELY (POWER ON)

Cause: The drive is stopped via a STOP E (retraction motion).
"Safe Operating Stop" (SOS) is activated after the parameterized time has expired.
Possible causes:
- stop request from the higher-level control.
- subsequent response to the message C01714 "SI Motion CU: Safely-Limited Speed exceeded".
- subsequent response to the message C01715 "SI Motion CU: Safely-limited position exceeded".
- subsequent response to the message C01716 "SI Motion CU: tolerance for safe motion direction exceeded".
See also: p9554 (SI Motion transition time STOP E to SOS (SBH) (Control Unit))

© Siemens AG 2012 All Rights Reserved

Remedy: - remove the cause of the fault at the control.
- carry out a diagnostics routine for message C01714/C01715/C01716.
This message can be acknowledged as follows:
- motion monitoring functions integrated in the drive: Via Terminal Module 54F (TM54F) or PROFIsafe
- motion monitoring functions with SINUMERIK: Via the machine control panel
Note:
SI: Safety Integrated
SOS: Safe Operating Stop / SBH: Safe operating stop

C01711 SI Motion CU: Defect in a monitoring channel

Message value: %1

Drive object: VECTOR_G

Reaction: NONE

Acknowledge: IMMEDIATELY (POWER ON)

Cause: When cross-comparing the two monitoring channels, the drive detected a difference between the input data or results of the monitoring functions and initiated a STOP F. One of the monitoring functions no longer reliably functions - i.e. safe operation is no longer possible.
If at least one monitoring function is active, then after the parameterized timer has expired, the message C01701 "SI Motion: STOP B initiated" is output.
The message value that resulted in a STOP F is displayed in r9725. The described message values involve the crosswise data comparison between the Control Unit and Motor Module. If the drive is operated together with a SINUMERIK, the message values are described in message 27001 of SINUMERIK.
The following message values may also occur in the following cases if the cause that is explicitly mentioned does not apply:
- cycle times not set uniformly (p9500/p9300 and p9511/p9311)
- differently parameterized axis types (p9502/p9302).
- excessively fast cycle times (p9500/p9300, p9511/p9311).
- for message values 3, 44 ... 57, 232 and 1-encoder systems, differently parameterized encoder values (p9516/p9316, p9517/p9317, p9518/p9318, p9520/p9320, p9521/p9321, p9522/p9322, p9526/p9326).
- incorrect synchronization.
Message value (r9749, interpret decimal):
0 to 999: Number of the cross-compared data that resulted in this fault.
Message values that are not subsequently listed are only for internal Siemens troubleshooting.
0: Stop request from the other monitoring channel.
1: Status image of monitoring functions SOS, SLS or SLP (result list 1) (r9710[0], r9710[1]).
2: Status image of monitoring function SCA or n < nx (result list 2) (r9711[0], r9711[1]).
3: The position actual value differential (r9713) between the two monitoring channels is greater than the tolerance in p9542/p9342. When actual value synchronization is enabled (p9501.3/p9301.3), the velocity differential (based on the position actual value) is greater than the tolerance in p9549/p9349.
4: Error when synchronizing the crosswise data comparison between the two channels.
5: Function enable signals (p9501/p9301)
6: Limit value for SLS1 (p9531[0]/p9331[0])
7: Limit value for SLS2 (p9531[1]/p9331[1])
8: Limit value for SLS3 (p9531[2]/p9331[2])
9: Limit value for SLS4 (p9531[3]/p9331[3])
10: Standstill tol. (p9530/p9330)
11: Upper limit value for SLP1 (p9534[0]/p9334[0]).
12: Lower limit value for SLP1 (p9535[0]/p9335[0]).
13: Upper limit value for SLP2 (p9534[1]/p9334[1]).
14: Lower limit value for SLP2 (p9535[1]/p9335[1]).
31: Position tolerance (p9542/p9342) or (p9549/p9349) when actual value synchronization is enabled (p9501.3/p9301.3)
32: Position tolerance for safe referencing (p9544/p9344).
33: Time, velocity changeover (p9551/p9351)
35: Delay time, pulse canc. (p9556/p9356)
36: Checking time, pulse canc. (p9557/p9357)
37: Trans. time, STOP C to SOS (p9552/p9352)
38: Trans. time STOP D to SOS (p9553/p9353)
39: Trans. time, STOP E to SOS (p9554/p9354)
40: Stop response for SLS (p9561/p9361)
41: Stop response for SLP1 (p9562[0]/p9362[0])
42: Shutdown speed, pulse canc. (p9560/p9360)

© Siemens AG 2012 All Rights Reserved

43: Memory test, stop response (STOP A).
44 ... 57: General
Possible cause 1 (during commissioning or parameter modification)
The tolerance value for the monitoring function is not the same on the two monitoring channels.
Possible cause 2 (during active operation)
The limit values are based on the actual value (r9713). If the safe actual values on the two monitoring channels do not match, the limit values, which have been set at a defined interval, will also be different (i.e. corresponding to fault value 3). This can be ascertained by checking the safe actual positions.
44: Position actual value (r9713) + limit value for SLS1 (p9531[0]/p9331[0]) * Safety monitoring clock cycle
45: Position actual value (r9713) - limit value for SLS1 (p9531[0]/p9331[0]) * Safety monitoring clock cycle
46: Position actual value (r9713) + limit value for SLS2 (p9531[1]/p9331[1]) * Safety monitoring clock cycle
47: Position actual value (r9713) - limit value for SLS2 (p9531[1]/p9331[1]) * Safety monitoring clock cycle
48: Position actual value (r9713) + limit value for SLS3 (p9531[2]/p9331[2]) * Safety monitoring clock cycle
49: Position actual value (r9713) - limit value for SLS3 (p9531[2]/p9331[2]) * Safety monitoring clock cycle
50: Position actual value (r9713) + limit value for SLS4 (p9531[3]/p9331[3]) * Safety monitoring clock cycle
51: Position actual value (r9713) - limit value for SLS4 (p9531[3]/p9331[3]) * Safety monitoring clock cycle
52: Standstill position + tolerance (p9530/9330)
53: Standstill position - tolerance (p9530/9330)
54: Position actual value (r9713) + limit value nx (p9546/p9346) + tolerance (p9542/p9342)
55: Position actual value (r9713) + limit value nx (p9546/p9346)
56: Position actual value (r9713) - limit value nx (p9546/p9346)
57: Position actual value (r9713) - limit value nx (p9546/p9346) - tolerance (p9542/p9342)
58: Actual stop request.
75: Velocity limit nx (p9546, p9346).
When the function "n<nx: hysteresis and filtering" (p9501.16=1) is enabled, this fault value is also output for a different hysteresis tolerance (p9547/p9347).
76: Stop response for SLS1 (p9563[0]/p9363[0])
77: Stop response for SLS2 (p9563[1]/p9363[1])
78: Stop response for SLS3 (p9563[2]/p9363[2])
79: Stop response for SLS4 (p9563[3]/p9363[3])
80: Modulo value for SP for rotary axes (p9505/p9305).
81: Velocity tolerance for SAM (p9548/p9348)
82: SGEs for SLS correction factor.
83: Acceptance test timer (p9558/p9358)
84: Trans. time STOP F (p9555/p9355)
85: Trans. time bus failure (p9580/p9380)
86: ID 1-encoder system (p9526/p9326).
87: Encoder assignment, second channel (p9526/p9326)
89: Encoder limit freq.
230: Filter time constant for n < nx.
231: Hysteresis tolerance for n < nx.
232: Smoothed velocity actual value.
233: Limit value nx / safety monitoring clock cycle + hysteresis tolerance.
234: Limit value nx / Safety monitoring clock cycle.
235: -Limit value nx / Safety monitoring clock cycle.
236: -Limit value nx / safety monitoring clock cycle - hysteresis tolerance.
237: SGA n < nx.
238: Speed limit value for SAM (p9568/p9368).
239: Acceleration for SBR (p9581/p9381 and p9583/p9383).
240: Inverse value of acceleration for SBR (p9581/p9381 and p9583/p9383).
241: Deceleration time for SBR (p9582/p9382).
242: Encoderless safety (p9506/p9306).
243: Extended alarm acknowledgment (p9507/p9307).
244: Encoderless actual value sensing filter time (p9587/p9387).
245: Encoderless actual value sensing minimum current (p9588/p9388).
246: Voltage tolerance acceleration (p9589/p9389).
247: SDI tolerance (p9564/p9364).
248: SDI positive upper limit (0x7fffffff).
249: Position actual value (r9713) - SDI tolerance.
250: Position actual value (r9713) + SDI tolerance.
251: SDI negative lower limit (0x80000001).
252: SDI stop response (p9566/p9366).
253: SDI delay time (p9565/p9365).
254: Setting the evaluation delay for actual value sensing after pulse enable (p9586/p9386).

© Siemens AG 2012 All Rights Reserved

255: Setting, behavior during pulse suppression (p9509/p9309).
256: Status image of monitoring functions SOS, SLS, SLP, test stop, SBR, SDI (result list 1 ext) (r9710).
257: Safety functions for motion monitoring functions without selection (p9512/p9312) different.
258: Fault tolerance, actual value sensing encoderless (p9585/p9385).
259: Scaling factor for safe position via PROFIsafe (p9574/p9374) different.
260: Modulo value including scaling (p9505/p9305 and p9574/p9374) for SP with 16 bit.
261: Scaling factor for acceleration for SBR different.
262: Scaling factor for the inverse value of the acceleration for SBR different.
263: Stop response for SLP2 (p9562[1]/p9362[1])
264: Position tolerance including scaling (p9542/p9342 and p9574/p9374) for SP with 16 bit.
1000: Watchdog timer has expired. Too many signal changes have occurred at safety-relevant inputs.
1001: Initialization error of watchdog timer.
1002:
User agreement after the timer has expired different.
The user agreement is not consistent. After a time of 2 s has expired, the status of the user agreement is different in both monitoring channels.
1003:
Reference tolerance exceeded.
When the user agreement is set, the difference between the new reference point that has been determined after power up (absolute encoder) or reference point approach (distance-coded or incremental measuring system) and the safe actual position (saved value + traversing distance) is greater than the reference tolerance (p9544). In this case, the user agreement is withdrawn.
1004:
Plausibility error for user agreement.
1. If the user agreement has already been set, then setting is initiated again. In this case, the user agreement is withdrawn.
2. The user agreement was set, although the axis has still not been referenced.
1005:
- For safe motion monitoring functions without encoder: pulses already suppressed for test stop selection.
- For safe motion monitoring functions with encoder: STO already active for test stop selection.
1011: Acceptance test status between the monitoring channels differ.
1012: Plausibility violation of the actual value from the encoder.
1020: Cyc. communication failure between the monit. cycles.
1021: Cyc. communication failure between the monit. channel and Sensor Module.
1022: Sign-of-life error for DRIVE-CLiQ encoder CU
1023: Error in the effectiveness test in the DRIVE-CLiQ encoder
1032: Sign-of-life error for DRIVE-CLiQ encoder MM
1033: Error checking offset between POS1 and POS2 for DRIVE-CLiQ encoder CU
1034: Error checking offset between POS1 and POS2 for DRIVE-CLiQ encoder MM
1041: Current absolute value too low (encoderless)
1042: Current/voltage plausibility error
1043: Too many acceleration phases
1044: Actual current values plausibility error.
5000 ... 5140:
PROFIsafe message values.
For these fault values, the failsafe control signals (failsafe values) are transferred to the safety functions.
5000, 5014, 5023, 5024, 5030 ... 5032, 5042, 5043, 5052, 5053, 5068, 5072, 5073, 5082 ... 5087, 5090, 5091, 5122 ... 5125, 5132 ... 5135, 5140: An internal software error has occurred (only for internal Siemens troubleshooting).
5012: Error when initializing the PROFIsafe driver.
5013: The result of the initialization is different for the two controllers.
5022: Error when evaluating the F parameters. The values of the transferred F parameters do not match the expected values in the PROFIsafe driver.
5025: The result of the F parameterization is different for the two controllers.
5026: CRC error for the F parameters. The transferred CRC value of the F parameters does not match the value calculated in the PST.
5065: A communications error was identified when receiving the PROFIsafe telegram.
5066: A time monitoring error (timeout) was identified when receiving the PROFIsafe telegram.
6000 ... 6166:
PROFIsafe message values (PROFIsafe driver for PROFIBUS DP V1/V2 and PROFINET).
For these fault values, the failsafe control signals (failsafe values) are transferred to the safety functions.
6000: A fatal PROFIsafe communication error has occurred.
6064 ... 6071: Error when evaluating the F parameters. The values of the transferred F parameters do not match the expected values in the PROFIsafe driver.
6064: Destination address and PROFIsafe address are different (F_Dest_Add).

© Siemens AG 2012 All Rights Reserved

6065: Destination address not valid (F_Dest_Add).
6066: Source address not valid (F_Source_Add).
6067: Watchdog time not valid (F_WD_Time).
6068: Incorrect SIL level (F_SIL).
6069: Incorrect F-CRC length (F_CRC_Length).
6070: Incorrect F parameter version (F_Par_Version).
6071: CRC error for the F parameters (CRC1). The transferred CRC value of the F parameters does not match the value calculated in the PROFIsafe driver.
6072: F parameterization is inconsistent.
6165: A communications error was identified when receiving the PROFIsafe telegram. The fault may also occur if an inconsistent or out-of-date PROFIsafe telegram has been received after switching the Control Unit off and on or after plugging in the PROFIBUS/PROFINET cable.
6166: A time monitoring error (timeout) was identified when receiving the PROFIsafe telegram.
7000: Difference of the safe position is greater than the parameterized tolerance (p9542/p9342).
7001: Scaling value for the safe position in the 16 bit notation, too low (p9574/p9374).
7002: Cycle counter for transferring the safe position is different in both monitoring channels.
See also: p9555 (SI Motion transition time STOP F to STOP B (Control Unit)), r9725 (SI Motion, diagnostics STOP F)

Remedy: The following generally applies:
The monitoring clock cycles in both channels and the axis types should be checked for equality and the same setting applied if necessary. If the error continues to be identified, increasing the monitoring clock cycles may resolve it.
Re message value = 0:
- no error was identified in this monitoring channel. Note the error message of the other monitoring channel (for MM: C30711).
Re message value = 3:
Commissioning phase:
Encoder evaluation for own or second channel has been set incorrectly --> Correct the encoder evaluation.
In operation:
Check the mechanical design and the encoder signals.
Re message value = 4:
The monitoring clock cycles in both channels should be checked for equality and if required, set the same. In combination with fault value 5 from the other monitoring channel (with MM: C30711), the monitoring clock cycle settings must be increased.
Re message value = 232:
-increase the hysteresis tolerance (p9547/p9347). Possibly set the filtering higher (p9545/p9345).
Re message value = 1 ... 999:
- if the message value is listed under cause: Check the crosswise-compared parameters to which the message value refers.
- copy the safety parameters.
- carry out a POWER ON (power off/on) for all components.
- upgrade the Motor Module software.
- upgrade the Control Unit software.
- correction of the encoder evaluation. The actual values differ as a result of mechanical faults (V belts, travel to a mechanical endstop, wear and window setting that is too narrow, encoder fault, ...).
Re message value = 1000:
- investigate the signal associated with the safety-relevant input (contact problems).
Re message value = 1001:
- carry out a POWER ON (power off/on) for all components.
- upgrade the Motor Module software.
- upgrade the Control Unit software.
Re message value = 1002:
- Perform safe acknowledgment, set the user agreement in both monitoring channels simultaneously (within 2 s).
Re message value = 1003:
- check the mechanical system of the axis. It is possible that the axis was shifted when switched-off, and the last saved actual position no longer corresponds with the new actual position after the system has been powered up again.
- Increase the tolerance for the actual value comparison when referencing (p9544).
Then check the actual values, perform a POWER ON and set the user agreement again.
Re message value = 1004:
For 1., the following applies: Perform safe acknowledgment. Set the user agreement again.
For 2., the following applies: Perform safe acknowledgment. Only set the user agreement again if the axis has been referenced.

© Siemens AG 2012 All Rights Reserved

Re message value = 1005:
- For safe motion monitoring functions without encoder: check the conditions for pulse enable.
- For safe motion monitoring functions with encoder: check the conditions for STO deselection.
Note:
For a power module, the test stop should always be performed for pulse enable (independent of whether with encoder or without encoder).
Re message value = 1011:
- for diagnostics, refer to parameter (r9571).
Re message value = 1012:
- upgrade the Sensor Module software.
- for 1-encoder systems, the following applies: check the encoder parameters for equality (p9515/p9315, p9519/p9319, p9523/p9323, p9524/p9324, p9525/p9325, p9529/p9329).
- For DQI encoders the following applies: If required, upgrade the firmware version of the Control Unit to a more recent version, which is released for DQI encoders.
- check the electrical cabinet design and cable routing for EMC compliance
Re message value = 1020, 1021:
- check the communication link.
- increase the monitoring cycle clock settings (p9500, p9511).
- carry out a POWER ON (power off/on) for all components.
- replace the hardware.
Re message value = 1033:
- If required, upgrade the firmware version of the Control Unit to a more recent version, which is released for DQI encoders.
Re message value = 1041:
- Check whether the motor has sufficient current (>r9785[0]).
- reduce the minimum current (p9588).
- for synchronous motors increase the absolute value of p9783.
- Check whether the function "Closed-loop controlled operation with HF signal injection" is activated (p1750.5 = 1) and if required, deactivate.
Re message value = 1042:
- increase the ramp-function generator ramp-up/down time (p1120/p1121).
- check that the current/speed control is set correctly (torque-generating/field-generating current and actual speed value may not fluctuate).
- reduce the dynamic response of the setpoint value.
- Check the absolute current and voltage values, and set the control behavior so that this is greater than 3% of the rated converter data in operation or in the case of a fault.
Re message value = 1043:
- increase the voltage tolerance (p9589).
- increase the ramp-function generator ramp-up/down time (p1120/p1121).
- check that the current/speed control is set correctly (torque-generating/field-generating current and actual speed value may not fluctuate).
- reduce the dynamic response of the setpoint value.
Re message value = 5000, 5014, 5023, 5024, 5030, 5031, 5032, 5042, 5043, 5052, 5053, 5068, 5072, 5073, 5082 ... 5087, 5090, 5091, 5122 ... 5125, 5132 ... 5135, 5140:
- carry out a POWER ON (power off/on) for all components.
- check whether there is a DRIVE-CLiQ communication error between the Control Unit and the Motor Module involved and, if required, carry out a diagnostics routine for the faults identified.
- upgrade firmware to later version.
- contact the Hotline.
- replace the Control Unit.
Re message value = 5012:
- check the setting of the PROFIsafe address of the Control Unit (p9610) and that of the Motor Module (p9810). It is not permissible for the PROFIsafe address to be 0 or FFFF!
Re message value = 5013, 5025:
- carry out a POWER ON (power off/on) for all components.
- check the setting of the PROFIsafe address of the Control Unit (p9610) and that of the Motor Module (p9810).
- check whether there is a DRIVE-CLiQ communication error between the Control Unit and the Motor Module involved and, if required, carry out a diagnostics routine for the faults identified.
Re message value = 5022:
- check the setting of the values of the F parameters at the PROFIsafe slave (F_SIL, F_CRC_Length, F_Par_Version, F_Source_Add, F_Dest_add, F_WD_Time).
Re message value = 5026:
- check the settings of the values of the F parameters and the F parameter CRC (CRC1) calculated from these at the PROFIsafe slave and update.

© Siemens AG 2012 All Rights Reserved

Re message value = 5065:
- check the configuration and communication at the PROFIsafe slave (cons. No. / CRC).
- check the setting of the value for F parameter F_WD_Time on the PROFIsafe slave and increase if necessary.
- check whether there is a DRIVE-CLiQ communication error between the Control Unit and the Motor Module involved and, if required, carry out a diagnostics routine for the faults identified.
Re message value = 5066:
- check the setting of the value for F parameter F_WD_Time on the PROFIsafe slave and increase if necessary.
- evaluate diagnostic information in the F host.
- check PROFIsafe connection.
Re message value = 6000:
- carry out a POWER ON (power off/on) for all components.
- check whether there is a DRIVE-CLiQ communication error between the Control Unit and the Motor Module involved and, if required, carry out a diagnostics routine for the faults identified.
- increase the monitoring cycle clock settings (p9500, p9511).
- upgrade firmware to later version.
- contact the Hotline.
- replace the Control Unit.
Re message value = 6064:
- check the setting of the value in the F parameter F_Dest_Add at the PROFIsafe slave.
- check the setting of the PROFIsafe address of the Control Unit (p9610) and that of the Motor Module (p9810).
Re message value = 6065:
- check the setting of the value in the F parameter F_Dest_Add at the PROFIsafe slave. It is not permissible for the destination address to be either 0 or FFFF!
Re message value = 6066:
- check the setting of the value in the F parameter F_Source_Add at the PROFIsafe slave. It is not permissible for the source address to be either 0 or FFFF!
Re message value = 6067:
- check the setting of the value in the F parameter F_WD_Time at the PROFIsafe slave. It is not permissible for the watch time to be 0!
Re message value = 6068:
- check the setting of the value in the F parameter F_SIL at the PROFIsafe slave. The SIL level must correspond to SIL2!
Re message value = 6069:
- check the setting of the value in the F parameter F_CRC_Length at the PROFIsafe slave. The setting of the CRC2 length is 2-byte CRC in the V1 mode and 3-byte CRC in the V2 mode!
Re message value = 6070:
- check the setting of the value in the F parameter F_Par_Version at the PROFIsafe slave. The value for the F parameter version is 0 in the V1 mode and 1 in the V2 mode!
Re message value = 6071:
- check the settings of the values of the F parameters and the F parameter CRC (CRC1) calculated from these at the PROFIsafe slave and, if required, update.
Re message value = 6072:
- check the settings of the values for the F parameters and, if required, correct.
The following combinations are permissible for F parameters F_CRC_Length and F_Par_Version:
F_CRC_Length = 2-byte CRC and F_Par_Version = 0
F_CRC_Length = 3-byte CRC and F_Par_Version = 1
Re message value = 6165:
- if the fault occurs after powering up the Control Unit or after plugging in the PROFIBUS/PROFINET cable, acknowledge the fault.
- check the configuration and communication at the PROFIsafe slave.
- check the setting of the value for F parameter F_WD_Time on the PROFIsafe slave and increase if necessary.
- check whether there is a DRIVE-CLiQ communication error between the Control Unit and the Motor Module involved and, if required, carry out a diagnostics routine for the faults identified.
Re message value = 6166:
- check the configuration and communication at the PROFIsafe slave.
- check the setting of the value for F parameter F_WD_Time on the PROFIsafe slave and increase if necessary.
- evaluate diagnostic information in the F host.
- check PROFIsafe connection.
Re message value = 7000:
- Increase the position tolerance (p9542/p9342).
- Determine the actual position of CU (r9713[0] and the second channel r9713[1], and check the difference for plausibility.
- Reduce the difference of the actual position from CU (r9713[0] and the second channel r9713[1] for a 2-encoder system.

© Siemens AG 2012 All Rights Reserved

Re message value = 7001:
- Increase the scaling value for the safe position in the 16 bit notation (p9574/p9374).
- If required, reduce the traversing range.
Re message value = 7002:
- carry out a POWER ON (power off/on) for all components.
- check whether there is a DRIVE-CLiQ communication error between the Control Unit and the Motor Module involved and, if required, carry out a diagnostics routine for the faults identified.
This message can be acknowledged as follows:
- motion monitoring functions integrated in the drive: Via Terminal Module 54F (TM54F) or PROFIsafe
- motion monitoring functions with SINUMERIK: Via the machine control panel
See also: p9300 (SI Motion monitoring clock cycle (Motor Module)), p9500 (SI Motion monitoring clock cycle (Control Unit))

C01712 SI Motion CU: Defect in F-IO processing

Message value: %1

Drive object: VECTOR_G

Reaction: NONE

Acknowledge: IMMEDIATELY (POWER ON)

Cause: When cross checking and comparing the two monitoring channels, the drive detected a difference between parameters or results of the F-IO processing and initiated a STOP F. One of the monitoring functions no longer reliably functions - i.e. safe operation is no longer possible.
The safety message C01711 with message value 0 is also displayed due to initiation of STOP F.
If at least one monitoring function is active, the safety message C01701 "SI Motion: STOP B initiated" is output after the parameterized timer has expired.
Message value (r9749, interpret decimal):
Number of the cross-compared data that resulted in this message.
1: SI discrepancy monitoring time inputs (p10002, p10102).
2: SI acknowledgement internal event input terminal (p10006, p10106).
3: SI STO input terminal (p10022, p10122).
4: SI SS1 input terminal (p10023, p10123).
5: SI SS2 input terminal (p10024, p10124).
6: SI SOS input terminal (p10025, p10125).
7: SI SLS input terminal (p10026, p10126).
8: SI SLS_Limit(1) input terminal (p10027, p10127).
9: SI SLS_Limit(2) input terminal (p10028, p10128).
10: SI Safe State signal selection (p10039, p10139).
11 SI F-DI input mode (p10040, p10140).
12: SI F-DO 0 signal sources (p10042, p10142).
13: Different states for static inactive signal sources (p10006, p10022 ... p10031).
14: SI discrepancy monitoring time outputs (p10002, p10102).
15: SI acknowledgment internal event (p10006, p10106).
16: SI test sensor feedback signal test mode selected for test stop (p10046, p10146, p10047, p10147).
17: SI delay time for test stop at DOs (p10001).
18 ... 25: SI test sensor feedback signal (p10046, p10146, p10047, p10147). Expected state of internal readback signal, generated from the selected test stop mode.
26 ... 33: SI test sensor feedback signal (p10046, p10146, p10047, p10147). Expected state of external readback signal, generated from the selected test stop mode.
34 ... 41: SI test sensor feedback signal (p10046, p10146, p10047, p10147). Expected state of second internal readback signal, generated from the selected test stop mode.
42: Internal data for processing the second internal readback signal, generated from the selected test stop mode (p10047, p10147).
43: Internal data for processing the internal readback signal, generated from the selected test stop mode (p10047, p10147).
44: Internal data for processing the external readback signal, generated from the selected test stop mode (p10047, p10147).
45: Internal data for initialization state of test stop mode, dependent upon test stop parameters.
46: SI digital inputs debounce time (p10017, p10117)
47: Selection F-DI for PROFIsafe (p10050, p10150)
48: Screen form of the F-DIs used (p10006, p10022 ... p10031).
49: SI SDI positive input terminal (p10030, p10130).
50: SI SDI negative input terminal (p10031, p10131).
51: SI SLP input terminal (p10032, p10132).

© Siemens AG 2012 All Rights Reserved

52: SI SLP select input terminal (p10033, p10133).
53: Internal data for retraction logic (p10009, p100109).
54: SI F-DI for retraction SLP (p10009, p100109).

Remedy: - check parameterization in the parameters involved and correct if required.
- ensure equality by copying the SI data to the second channel and then carry out an acceptance test.
- check monitoring clock cycle in p9500 and p9300 for equality.
Note:
This message can be acknowledged via F-DI or PROFIsafe.
See also: p9300 (SI Motion monitoring clock cycle (Motor Module)), p9500 (SI Motion monitoring clock cycle (Control Unit))

C01714 SI Motion CU: Safely-Limited Speed exceeded

Message value: %1

Drive object: VECTOR_G

Reaction: NONE

Acknowledge: IMMEDIATELY (POWER ON)

Cause: The drive has moved faster than that specified by the velocity limit value (p9531). The drive is stopped as a result of the configured stop response (p9563).
Message value (r9749, interpret decimal):
100: SLS1 exceeded.
200: SLS2 exceeded.
300: SLS3 exceeded.
400: SLS4 exceeded.
1000: Encoder limit frequency exceeded.

Remedy: - check the traversing/motion program in the control.
- check the limits for "Safely-Limited Speed (SLS) and if required, adapt (p9531).
This message can be acknowledged as follows:
- motion monitoring functions integrated in the drive: Via Terminal Module 54F (TM54F) or PROFIsafe
- motion monitoring functions with SINUMERIK: Via the machine control panel
Note:
SI: Safety Integrated
SLS: Safely-Limited Speed / SG: Safely reduced speed
See also: p9531 (SI Motion SLS (SG) limit values (Control Unit)), p9563 (SI Motion SLS (SG)-specific stop response (Control Unit))

C01715 SI Motion CU: Safely-Limited Position exceeded

Message value: %1

Drive object: VECTOR_G

Reaction: NONE

Acknowledge: IMMEDIATELY (POWER ON)

Cause: The axis has moved past a parameterized position that is monitored by the "SLP" function.
Message value (r9749, interpret decimal):
10: SLP1 violated.
20: SLP2 violated.

Remedy: - check the traversing/motion program in the control.
- check the limits for "SLP" function and if required, adapt (p9534, p9535).
This message can be acknowledged as follows:
- motion monitoring functions with SINUMERIK: Via the machine control panel
Note:
SI: Safety Integrated
SLP: Safely-Limited Position / SE: Safe software limit switches
See also: p9534 (SI Motion SLP (SE) upper limit values (Control Unit)), p9535 (SI Motion SLP (SE) lower limit values (Control Unit))

© Siemens AG 2012 All Rights Reserved

C01716 SI Motion CU: Tolerance for safe motion direction exceeded

Message value: %1

Drive object: VECTOR_G

Reaction: NONE

Acknowledge: IMMEDIATELY (POWER ON)

Cause: The tolerance for the "safe motion direction" function was exceeded. The drive is stopped as a result of the configured stop response (p9566).
Message value (r9749, interpret decimal):
0: Tolerance for the "safe motion direction positive" function exceeded.
1: Tolerance for the "safe motion direction negative" function exceeded.

Remedy: - check the traversing/motion program in the control.
- check the tolerance for "SDI" function and if required, adapt (p9564).
This message can be acknowledged as follows:
- Deselect the "SDI" function and select again.
- Perform a safe acknowledgment via F-DI or PROFIsafe.
Note:
SDI: Safe Direction (safe motion direction)
SI: Safety Integrated
See also: p9564 (SI Motion SDI tolerance (Control Unit)), p9565 (SI Motion SDI delay time (Control Unit)), p9566 (SI Motion SDI stop response (Control Unit))

C01730 SI Motion CU: Reference block for dynamic safely limited speed invalid

Message value: %1

Drive object: VECTOR_G

Reaction: NONE

Acknowledge: IMMEDIATELY (POWER ON)

Cause: The reference block transferred via PROFIsafe is negative.
A reference block is used to generate a referred velocity limit value based on the reference quantity "Velocity limit value SLS1" (p9531[0]).
The drive is stopped as a result of the configured stop response (p9563[0]).
Message value (r9749, interpret decimal):
requested, invalid reference block.

Remedy: In the PROFIsafe telegram, input data S_SLS_LIMIT_IST must be corrected.
This message can be acknowledged as follows:
- motion monitoring functions integrated in the drive: Via Terminal Module 54F (TM54F) or PROFIsafe
- motion monitoring functions with SINUMERIK: Via the machine control panel
Note:
SI: Safety Integrated
SLS: Safely-Limited Speed / SG: Safely reduced speed

C01745 SI Motion CU: Checking braking torque for the brake test

Message value: -

Drive object: VECTOR_G

Reaction: NONE

Acknowledge: POWER ON (IMMEDIATELY)

Cause: The scaling of the brake torque for the brake test can be changed using parameter p2003.
An acceptance test must be carried out again for the braking test. This determines whether the braking test is still carried out with the correct braking torque.

Remedy: - carry out a POWER ON (power off/on) for all components.
- repeat the acceptance test for the safe brake test if the brake test is used.
See also: p2003 (Reference torque)

© Siemens AG 2012 All Rights Reserved

C01750 SI Motion CU: Hardware fault safety-relevant encoder

Message value: %1

Drive object: VECTOR_G

Reaction: NONE

Acknowledge: IMMEDIATELY (POWER ON)

Cause: The encoder that is used for the safety-relevant motion monitoring functions signals a hardware fault.
Message value (r9749, interpret decimal):
Encoder status word 1, encoder status word 2 that resulted in the message.

Remedy: - check the encoder connection.
- replace encoder.
This message can be acknowledged as follows:
- motion monitoring functions integrated in the drive: Via Terminal Module 54F (TM54F) or PROFIsafe
- motion monitoring functions with SINUMERIK: Via the machine control panel.
Note regarding encoder replacement for a third-party motor:
The serial number of the encoder must be copied in order to acknowledge this safety message.
This can be realized using p0440 = 1 or p1990 = 1.

C01751 SI Motion CU: Effectivity test error safety-relevant encoder

Message value: %1

Drive object: VECTOR_G

Reaction: NONE

Acknowledge: IMMEDIATELY (POWER ON)

Cause: The DRIVE-CLiQ encoder for safe motion monitoring signals an error for the effectivity tests.
Message value (r9749, interpret decimal):
Only for internal Siemens troubleshooting.

Remedy: - check the encoder connection.
- replace encoder.
This message can be acknowledged as follows:
- motion monitoring functions integrated in the drive: Via Terminal Module 54F (TM54F) or PROFIsafe
- motion monitoring functions with SINUMERIK: Via the machine control panel

C01770 SI Motion CU: Discrepancy error of the failsafe inputs or outputs

Message value: %1

Drive object: VECTOR_G

Reaction: NONE

Acknowledge: IMMEDIATELY (POWER ON)

Cause: The fail-safe digital inputs/digital outputs (F-DI/F-DO) show a different state longer than that parameterized in p10002 / p10102.
Fault value (r0949, interpret bitwise binary):
yyyyxxxx bin
xxxx: Discrepancy error for fail-safe digital inputs (F-DI).
Bit 0: Discrepancy error for F-DI 0
Bit 1: Discrepancy error for F-DI 1
...
yyyy: Discrepancy error for fail-safe digital outputs (F-DO).
Bit 0: Discrepancy error for F-DO 0
...
Note:
If several discrepancy errors occur consecutively, then this fault is only signaled for the first error that occurs.

Remedy: - check the wiring of the F-DI (contact problems).
Note:
This message can be acknowledged via F-DI or PROFIsafe.
Discrepancy errors of an F-DI can only be completely acknowledged if safe acknowledgement was carried out once the cause of the error was resolved (p10006 or acknowledgment via PROFIsafe). As long as safety acknowledgement was not carried out, the corresponding F-DI stays in the safe state internally.
For cyclic switching operations at the F-DI, it may be necessary to adapt the discrepancy time to the switching frequency.
If the period of a cyclic switching pulse has the order of magnitude of double the value of p10002, then the following formulas must be checked.

© Siemens AG 2012 All Rights Reserved

p10002 < (tp / 2) - td (discrepancy time must be less than half the period minus the actual discrepancy time)
p10002 >= p9500 (discrepancy time must be no less than P9500)
p10002 > td (discrepancy time must be greater than the switch discrepancy time which may actually apply)
td = possible actual discrepancy time (in ms) that can occur with a switching operation. This must correspond to at least 1 SI sampling cycle (see p9500).
tp = period for a switching operation in ms.
When debounce p10017 is active, the discrepancy time is directly specified by the debounce time.
If the period of a cyclic switching pulse has the order of magnitude of twice the debounce time, then the following formulas should be checked.
p10002 < p10017 + 1 ms - td
p10002 > td
p10002 >= p9500
Example:
For a 12 ms SI sampling cycle and a switching frequency of 110 ms (p10017 = 0), the maximum discrepancy time which can be set is as follows:
p10002 <= (110/2 ms) - 12 ms = 43 ms
Rounded-off, p10002 <= 36 ms is obtained (since the discrepancy time can only be accepted as a whole SI sampling cycle, the value will need to be rounded up or down to a whole SI sampling time value if the result is not an exact multiple of an SI sampling cycle).
Note:
F-DI: Failsafe Digital Input
F-DO: Failsafe Digital Output

A01772 SI Motion CU: Test stop failsafe inputs/outputs active

Message value: -

Drive object: VECTOR_G

Reaction: NONE

Acknowledge: NONE

Cause: The test stop for the fail-safe digital inputs (F-DI) and/or fail-safe digital outputs (F-DO) is presently being performed.
Note:
F-DI: Failsafe Digital Input
F-DO: Failsafe Digital Output

Remedy: The alarm disappears automatically after successfully ending or canceling (when a fault condition occurs) the test stop.

F01773 SI Motion CU: Test stop error

Message value: %1

Drive object: VECTOR_G

Reaction: NONE

Acknowledge: IMMEDIATELY (POWER ON)

Cause: A fault has occurred on the CU side during the test stop for the fail-safe outputs.
Fault value (r0949, interpret hexadecimal):
RRRVWXYZ hex:
R: Reserved.
V: Actual state of the DO channel concerned (see X) on the CU (corresponds to the states read back from the hardware, bit 0 = DO 0, bit 1 = DO 1, etc.).
W: Required state of the DO channel concerned (see X, bit 0 = DO 0, bit 1 = DO 1, etc.).
X: DO channels involved, which indicate an error (bit 0 = DO 0, bit 1 = DO 1, etc.).
Y: Reason for the test stop fault.
Z: State of the test stop in which the fault has occurred.
Y: Reason for the test stop fault
Y = 1: MM side in incorrect test stop state (internal fault).
Y = 2: Expected states of the DOs were not fulfilled (CU305: readback via DI 22 / CU240 readback DI 2).
Y = 3: Incorrect timer state on CU side (internal fault)
Y = 4: Expected states of the diag DOs were not fulfilled (CU305: internal readback on MM channel).
Y = 5: Expected states of the second diag DOs were not fulfilled (CU305: internal readback on CU channel).
X and V indicate the DI or Diag-DO state dependent upon the reason for the fault (2, 4 or 5).
In the event of multiple test stop faults, the first one that occurred is shown.
Z: Test stop state and associated test actions
Z = 0 ... 3: Synchronization phase of test stop between CU and Motor Module no switching operations
Z = 4: DO + OFF and DO - OFF

© Siemens AG 2012 All Rights Reserved

Z = 5: Check to see if states are as expected
Z = 6: DO + ON and DO - ON
Z = 7: Check to see if states are as expected
Z = 8: DO + OFF and DO - ON
Z = 9: Check to see if states are as expected
Z = 10: DO + ON and DO - OFF
Z = 11: Check to see if states are as expected
Z = 12: DO + OFF and DO - OFF
Z = 13: Check to see if states are as expected
Z = 14: End of test stop
Diag expected states in table format:
Test stop state: Expectation Mode 1 / Mode 2 / Mode 3 / Mode 4
5: 0/-/-/1
7: 0/-/-/0
9: 0/-/-/0
11: 1/-/-/1
13: 0/-/-/1
Second diag expected states in table format:
Test stop state: Expectation Mode 1 / Mode 2 / Mode 3 / Mode 4
5: -/-/-/1
7: -/-/-/0
9: -/-/-/1
11: -/-/-/0
13: -/-/-/1
DI expected states in table format:
Test stop state: Expectation Mode 1 / Mode 2 / Mode 3 / Mode 4
5: -/1/1/-
7: -/0/0/-
9: -/0/1/-
11: -/0/1/-
13: -/1/1/-
Example:
Fault F01773 (CU) is signaled with fault value = 0001_0127 and fault F30773 (MM) is signaled with fault value 0000_0127.
This means that in state 7 (Z = 7) the state of the external readback signal was not set correctly (Y = 2) after DO-0 (X = 1) was switched to ON/ON.
Fault value 0001_0127 indicates that 0 was expected (W = 0) and 1 (V = 1) was read back from the hardware.
Fault value 0000_0127 on the MM indicates that the states were as expected.
In the case of fault F30773, W and V are always identical; a value of 0 always means that 0 was expected at the readback input but was not present on the other channel (CU).

Remedy: Check the wiring of the F-DOs and restart the test stop.
Note:
The fault is withdrawn if the test stop is successfully completed.
In the event of multiple test stop faults, the first one that occurred is shown.
Once the test stop has been restarted the next queued test stop fault will be signaled (if there is one).

A01774 SI Motion CU: Test stop necessary

Message value: -

Drive object: VECTOR_G

Reaction: NONE

Acknowledge: NONE

Cause: - after powering up the drive, a test stop has still not been carried out.
- a new test stop is required after commissioning.
- the time to carry out the forced checking procedure (test stop) has expired (p10003).
Note:
- The test must be performed within a defined, maximum time interval (p10003, maximum of 8760 hours) in order to comply with the requirements as laid down in the standards for timely fault detection and the conditions to calculate the failure rates of safety functions (PFH value). Operation beyond this maximum time period is permissible if it can be ensured that the forced checking procedure is performed before persons enter the hazardous area and who are depending on the safety functions correctly functioning.

Remedy: Initiate test stop (BI: p10007).

© Siemens AG 2012 All Rights Reserved

A01795 SI Motion CU: Wait time after exiting the safe pulse cancellation expired

Message value: -

Drive object: VECTOR_G

Reaction: NONE

Acknowledge: NONE

Cause: After exiting safe pulse cancellation, within the wait time of 5 seconds, encoderless actual value sensing was not able to be activated for the extended functions without selection.
A change is again made into the "safe pulse cancellation" state.

Remedy: - Check missing enable signals, which prevent the drive control from being commissioned (r0046).
- Evaluate possible fault messages of the encoderless actual value sensing and remove.

A01796 (F, N) SI CU: Wait for communication

Message value: %1

Drive object: VECTOR_G

Reaction: NONE

Acknowledge: NONE

Cause: The drive waits for communication to be established to execute the safety-relevant motion monitoring functions.
Note:
In this state, the pulses are safely suppressed.
Alarm value (r2124, interpret decimal):
1: Wait for communication to be established to SINUMERIK.
2: Wait for communication to be established to TM54F.
3: Wait for communication to be established to PROFIsafe F-Host.

Remedy: If, after a longer period of time, the message is not automatically withdrawn, the following checks have to be made as appropriate:
For communication with SINUMERIK, the following applies:
- check any other PROFIBUS messages/signals present and remove their cause.
- check that assignment of the axes on the higher-level control to the drives in the drive unit is correct.
- check enable signal of the safety-relevant motion monitoring functions for the corresponding axis on the higher-level control and if required, set it.
For communication with TM54F, the following applies:
- check any other messages/signals present for DRIVE-CLiQ communication with the TM54F and remove their cause.
- check the setting of p10010. All the drive objects controlled by the TM54F must be listed.
For communication with PROFIsafe F-Host, the following applies:
- Check any other PROFIsafe communication messages/signals present and evaluate them.
- check the operating state of the F-Host.
- Check the communication connection to the F Host.
- Check the communication connection to the Motor Module. It must be ensured that when the Control Unit powers up, the Motor Module is connected and at the latest is also switched-on with the Control Unit. Otherwise, if the Motor Module is subsequently inserted or switched-on, a power on must be performed at the Control Unit.
See also: p9601 (SI enable, functions integrated in the drive (Control Unit)), p9801 (SI enable, functions integrated in the drive (Motor Module)), p10010 (SI drive object assignment)

Reaction upon F: NONE (OFF1, OFF2, OFF3)

Acknowl. upon F: IMMEDIATELY

Reaction upon N: NONE

Acknowl. upon N: NONE

C01797 SI Motion CU: Axis not safely referenced

Message value: %1

Drive object: VECTOR_G

Reaction: NONE

Acknowledge: IMMEDIATELY (POWER ON)

Cause: The standstill position saved before powering down does not match the actual position determined at power-up.
Message value (r9749, interpret decimal):
1: Axis not referenced.
2: User agreement missing.

© Siemens AG 2012 All Rights Reserved

Remedy: If safe automatic referencing is not possible the user must issue a user agreement for the new position using the softkey. This mean that this position is then designated as safety-relevant.
Note:
SI: Safety Integrated

C01798 SI Motion CU: Test stop running

Message value: -
Drive object: VECTOR_G
Reaction: NONE
Acknowledge: IMMEDIATELY (POWER ON)
Cause: The test stop is active.
Remedy: Not necessary.
The message is withdrawn when the test stop is finished.
Note:
SI: Safety Integrated

C01799 SI Motion CU: Acceptance test mode active

Message value: -
Drive object: VECTOR_G
Reaction: NONE
Acknowledge: IMMEDIATELY (POWER ON)
Cause: The acceptance test mode is active. The POWER ON signals of the safety-relevant motion monitoring functions can be acknowledged during the acceptance test using the RESET button of the higher-level control.
Remedy: Not necessary.
The message is withdrawn when exiting the acceptance test mode.
Note:
SI: Safety Integrated

F01800 DRIVE-CLiQ: Hardware/configuration error

Message value: %1
Drive object: All objects
Reaction: Infeed: NONE (OFF1, OFF2)
Vector: NONE (ENCODER, IASC/DCBRAKE, OFF1, OFF2, OFF3, STOP1, STOP2)
Acknowledge: IMMEDIATELY (POWER ON)
Cause: A DRIVE-CLiQ connection fault has occurred.
Fault value (r0949, interpret decimal):
100 ... 107:
Communication via DRIVE-CLiQ socket X100 ... X107 has not been switched to cyclic operation. The cause may be an incorrect structure or a configuration that results in an impossible bus timing.
10:
Loss of the DRIVE-CLiQ connection. The cause may be, for example, that the DRIVE-CLiQ cable was withdrawn from the Control Unit or as a result of a short-circuit for motors with DRIVE-CLiQ. This fault can only be acknowledged in cyclic communication.
11:
Repeated faults when detecting the connection. This fault can only be acknowledged in cyclic communication.
12:
A connection was detected but the node ID exchange mechanism does not function. The reason is probably that the component is defective. This fault can only be acknowledged in cyclic communication.
Remedy: Re fault value = 100 ... 107:
- ensure that the DRIVE-CLiQ components have the same firmware versions.
- avoid longer topologies for short current controller clock cycles.
For fault value = 10:
- check the DRIVE-CLiQ cables at the Control Unit.
- remove any short-circuit for motors with DRIVE-CLiQ.
- carry out a POWER ON.
For fault value = 11:
- check the electrical cabinet design and cable routing for EMC compliance
For fault value = 12:
- replace the component involved.

© Siemens AG 2012 All Rights Reserved

A01840 SMI: Component found without motor data

Message value: Component number: %1

Drive object: All objects

Reaction: NONE

Acknowledge: NONE

Cause: An SMI/DQI without motor data has been found (e.g. SMI installed as replacement part).
Alarm value (r2124, interpret decimal):
Component number from target topology.

Remedy: 1. Download the SMI/DQI data (motor/encoder data) from the data backup again (p4690, p4691).
2. Carry out a POWER ON (power off/on) for this component.
Note:
DQI: DRIVE-CLiQ Sensor Integrated
SMI: SINAMICS Sensor Module Integrated
See also: p4690 (SMI spare part component number), p4691 (SMI spare part save/download data)

A01900 (F) PB/PN: Configuration telegram error

Message value: %1

Drive object: All objects

Reaction: NONE

Acknowledge: NONE

Cause: A controller attempts to establish a connection using an incorrect configuring telegram.
Alarm value (r2124, interpret decimal):
1:
Connection established to more drive objects than configured in the device. The drive objects for process data exchange and their sequence are defined in p0978.
2:
Too many PZD data words for output or input to a drive object. The number of possible PZD items in a drive object is determined by the number of indices in r2050/p2051.
3:
Uneven number of bytes for input or output.
4:
Setting data for synchronization not accepted. For more information, see A01902.
211:
Unknown parameterizing block.
223:
Clock synchronization for the PZD interface set in p8815[0] is not permissible.
More than one PZD interface is operated in clock synchronism.
253:
PN Shared Device: Illegal mixed configuration of PROFIsafe and PZD.
254:
PN Shared Device: Illegal double assignment of a slot/subslot.
255:
PN: Configured drive object and existing drive object do not match.
500:
Illegal PROFIsafe configuration for the interface set in p8815[1].
More than one PZD interface is operated with PROFIsafe.
501:
PROFIsafe parameter error (e.g. F_dest).
502:
PROFIsafe telegram does not match.
503:
PROFIsafe connection is rejected as long as there is no isochronous connection (p8969).
Additional values:
Only for internal Siemens troubleshooting.

Remedy: Check the bus configuration on the master and the slave sides.
Re alarm value = 1, 2:
- Check the list of the drive objects with process data exchange (p0978).
Note:
With p0978[x] = 0, all of the following drive objects in the list are excluded from the process data exchange.

© Siemens AG 2012 All Rights Reserved

Re alarm value = 2:
- Check the number of data words for output and input to a drive object.
Re alarm value = 211:
- Ensure offline version <= online version.
Re alarm value = 223, 500:
- Check the setting in p8839 and p8815.
- Check for inserted but not configured CBE20.
- Ensure that only one PZD interface is operated in clock synchronism or with PROFIsafe.
Re alarm value = 255:
- Check configured drive objects.
Re alarm value = 501:
- Check the set PROFIsafe address (p9610).
Re alarm value = 502:
- Check the set PROFIsafe telegram (p60022, p9611).

Reaction upon F: NONE (OFF1)

Acknowl. upon F: IMMEDIATELY

A01902 PB/PN clock cycle synchronous operation parameterization not permissible

Message value: %1

Drive object: All objects

Reaction: NONE

Acknowledge: NONE

Cause: Parameterization for isochronous operation is not permissible.
Alarm value (r2124, interpret decimal):
0: Bus cycle time Tdp < 0.5 ms.
1: Bus cycle time Tdp > 32 ms.
2: Bus cycle time Tdp is not an integer multiple of the current controller clock cycle.
3: Instant of the actual value sensing Ti > Bus cycle time Tdp or Ti = 0.
4: Instant of the actual value sensing Ti is not an integer multiple of the current controller clock cycle.
5: Instant of the setpoint acceptance To >= Bus cycle time Tdp or To = 0.
6: Instant of the setpoint acceptance To is not an integer multiple of the current controller clock cycle.
7: Master application cycle time Tmapc is not an integer multiple of the speed controller clock cycle.
8: Bus reserve bus cycle time Tdp - data exchange time Tdx less than two current controller clock cycles.
10: Instant of the setpoint acceptance To <= data exchange time Tdx + current controller clock cycle
11: Master application cycle time Tmapc > 14 x Tdp or Tmapc = 0.
12: PLL tolerance window Tpll_w > Tpll_w_max.
13: Bus cycle time Tdp is not a multiple of all basic clock cycles p0110[x].
16: For COMM BOARD, the instant in time for the actual value sensing Ti is less than two current controller clock cycles.

Remedy: - Adapt the bus parameterization Tdp, Ti, To.
- adapt the current and speed controller clock cycle.
Re alarm value = 10:
- Reduce Tdx by using fewer bus participants or shorter telegrams.
Note:
PB: PROFIBUS
PN: PROFINET

F01910 (N, A) Fieldbus: setpoint timeout

Message value: -

Drive object: All objects

Reaction: Infeed: OFF2 (NONE, OFF1)
Vector: OFF3 (IASC/DCBRAKE, NONE, OFF1, OFF2, STOP1, STOP2)

Acknowledge: IMMEDIATELY

Cause: The reception of setpoints from the fieldbus interface (onboard, PROFIBUS/PROFINET/USS) has been interrupted.
- bus connection interrupted.
- controller switched off.
- controller set into the STOP state.
See also: p2047 (PROFIBUS additional monitoring time)

© Siemens AG 2012 All Rights Reserved

Remedy: Restore the bus connection and set the controller to RUN.
PROFIBUS slave redundancy:
For operation on a Y link, it must be ensured that "DP alarm mode = DPV1" is set in the slave parameterization.
See also: p2047 (PROFIBUS additional monitoring time)

Reaction upon N: NONE
Acknowl. upon N: NONE
Reaction upon A: NONE
Acknowl. upon A: NONE

F01911 (N, A) PB/PN clock cycle synchronous operation clock cycle failure

Message value: -
Drive object: All objects
Reaction: Infeed: OFF1
Vector: OFF1 (OFF3)
Acknowledge: IMMEDIATELY
Cause: The global control telegram to synchronize the clock cycles has failed - in cyclic operation - for several DP clock cycles or has violated the time grid specified in the parameterizing telegram over several consecutive DP clock cycles (refer to the bus cycle time, Tdp and Tpllw).
Remedy: - check the physical bus configuration (cable, connector, terminating resistor, shielding, etc.).
- check whether communication was briefly or permanently interrupted.
- check the bus and controller for utilization level (e.g. bus cycle time Tdp was set too short).
PB: PROFIBUS
PN: PROFINET

Reaction upon N: NONE
Acknowl. upon N: NONE
Reaction upon A: NONE
Acknowl. upon A: NONE

F01912 (N, A) PB/PN clock cycle synchronous operation sign-of-life failure

Message value: -
Drive object: B_INF, ENC, VECTOR_G
Reaction: Infeed: OFF1
Vector: OFF1 (OFF3)
Acknowledge: IMMEDIATELY
Cause: The maximum permissible number of errors in the controller sign-of-life (clock synchronous operation) has been exceeded in cyclic operation.
Remedy: - physically check the bus (cables, connectors, terminating resistor, shielding, etc.).
- correct the interconnection of the controller sign-of-life (p2045).
- check whether the controller correctly sends the sign-of-life (e.g. create a trace with STW2.12 ... STW2.15 and trigger signal ZSW1.3).
- check the permissible telegram failure rate (p0925).
- check the bus and controller for utilization level (e.g. bus cycle time Tdp was set too short).
Note:
PB: PROFIBUS
PN: PROFINET

Reaction upon N: NONE
Acknowl. upon N: NONE
Reaction upon A: NONE
Acknowl. upon A: NONE

A01920 (F) PROFIBUS: Interruption cyclic connection

Message value: -
Drive object: All objects
Reaction: NONE
Acknowledge: NONE
Cause: The cyclic connection to the PROFIBUS master is interrupted.
Remedy: Establish the PROFIBUS connection and activate the PROFIBUS master in the cyclic mode.

© Siemens AG 2012 All Rights Reserved

Reaction upon F: NONE (OFF1)
Acknowl. upon F: IMMEDIATELY

A01921 (F) PROFIBUS: Receive setpoints after To

Message value: -
Drive object: All objects
Reaction: NONE
Acknowledge: NONE
Cause: Output data of PROFIBUS master (setpoints) received at the incorrect instant in time within the PROFIBUS clock cycle.
Remedy: - check bus configuration.
- check parameters for clock cycle synchronization (ensure To > Tdx).
Note:
To: Time of setpoint acceptance
Tdx: Data exchange time
Reaction upon F: NONE (OFF1)
Acknowl. upon F: IMMEDIATELY

A01930 PB/PN current controller clock cycle clock cycle synch. not equal

Message value: %1
Drive object: All objects
Reaction: NONE
Acknowledge: NONE
Cause: The current controller clock cycle of all drives must be set the same for the clock cycle synchronous operation.
Alarm value (r2124, interpret decimal):
Number of the drive object with different current controller clock cycle.
Remedy: Set current controller clock cycles to identical values (p0115[0]).
Note:
PB: PROFIBUS
PN: PROFINET
See also: p0115

A01931 PB/PN speed controller clock cycle clock cycle synch. not equal

Message value: %1
Drive object: All objects
Reaction: NONE
Acknowledge: NONE
Cause: The speed controller clock cycle of all drives must be set the same for the clock cycle synchronous operation.
Alarm value (r2124, interpret decimal):
Number of the drive object with the different speed controller clock cycle.
Remedy: Set the speed controller clock cycles the same (p0115[1]).
Note:
PB: PROFIBUS
PN: PROFINET
See also: p0115

A01932 PB/PN clock cycle synchronization missing for DSC

Message value: -
Drive object: B_INF, ENC, VECTOR_G
Reaction: NONE
Acknowledge: NONE
Cause: There is no clock synchronization or clock synchronous sign of life and DSC is selected.
Note:
DSC: Dynamic Servo Control
See also: p0922 (IF1 PROFIdrive telegram selection)
Remedy: Set clock synchronization across the bus configuration and transfer clock synchronous sign-of-life.
See also: r2064 (PB/PN diagnostics clock cycle synchronism)

© Siemens AG 2012 All Rights Reserved

A01940 PB/PN clock cycle synchronism not reached

Message value: -

Drive object: All objects

Reaction: NONE

Acknowledge: NONE

Cause: The bus is in the data exchange state and clock synchronous operation has been selected using the parameterizing telegram. It was not possible to synchronize to the clock cycle specified by the master.
- the master does not send a clock synchronous global control telegram although clock synchronous operation was selected when configuring the bus.
- the master is using another clock synchronous DP clock cycle than was transferred to the slave in the parameterizing telegram.
- at least one drive object has a pulse enable (not controlled from PROFIBUS/PROFINET either).

Remedy: - check the master application and bus configuration.
- check the consistency between the clock cycle input when configuring the slave and clock cycle setting at the master.
- check that no drive object has a pulse enable. Only enable the pulses after synchronizing the PROFIBUS/PROFINET drives.
Note:
PB: PROFIBUS
PN: PROFINET

A01941 PB/PN clock cycle signal missing when establishing bus communication

Message value: -

Drive object: All objects

Reaction: NONE

Acknowledge: NONE

Cause: The bus is in the data exchange state and clock synchronous operation has been selected using the parameterizing telegram. The global control telegram for synchronization is not being received.

Remedy: Check the master application and bus configuration.
Note:
PB: PROFIBUS
PN: PROFINET

A01943 PB/PN clock cycle signal error when establishing bus communication

Message value: -

Drive object: All objects

Reaction: NONE

Acknowledge: NONE

Cause: The bus is in the data exchange state and clock synchronous operation has been selected using the parameterizing telegram. The global control telegram for synchronization is being irregularly received.
-.the master is sending an irregular global control telegram.
- the master is using another clock synchronous DP clock cycle than was transferred to the slave in the parameterizing telegram.

Remedy: - check the master application and bus configuration.
- check the consistency between the clock cycle input when configuring the slave and clock cycle setting at the master.
Note:
PB: PROFIBUS
PN: PROFINET

A01944 PB/PN sign-of-life synchronism not reached

Message value: -

Drive object: B_INF, ENC, VECTOR_G

Reaction: NONE

Acknowledge: NONE

Cause: The bus is in the data exchange state and clock synchronous operation has been selected using the parameterizing telegram.

© Siemens AG 2012 All Rights Reserved

Synchronization with the master sign-of-life (STW2.12 ... STW2.15) could not be completed because the sign-of-life is changing differently to how it was configured in the Tmapc time grid.

Remedy: - ensure that the master correctly increments the sign-of-life in the master application clock cycle Tmapc.
- correct the interconnection of the master sign-of-life (p2045).
Note:
PB: PROFIBUS
PN: PROFINET

A01945 PROFIBUS: Connection to the Publisher failed

Message value: Fault cause: %1 bin

Drive object: All objects

Reaction: NONE

Acknowledge: NONE

Cause: For PROFIBUS peer-to-peer data transfer, the connection to at least one Publisher has failed.
Alarm value (r2124, interpret binary):
Bit 0 = 1: Publisher with address in r2077[0], connection failed.
...
Bit 15 = 1: Publisher with address in r2077[15], connection failed.

Remedy: - check the PROFIBUS cables.
- carry out a first commissioning of the Publisher that has the failed connection.
See also: r2077 (PROFIBUS diagnostics peer-to-peer data transfer addresses)

F01946 (A) PROFIBUS: Connection to the Publisher aborted

Message value: Fault cause: %1 bin

Drive object: All objects

Reaction: Infeed: OFF1 (NONE, OFF2)
Vector: OFF1 (NONE, OFF2, OFF3)

Acknowledge: IMMEDIATELY (POWER ON)

Cause: At this drive object, the connection to at least one Publisher for PROFIBUS peer-to-peer data transfer in cyclic operation has been aborted.
Fault value (r0949, interpret binary):
Bit 0 = 1: Publisher with address in r2077[0], connection aborted.
...
Bit 15 = 1: Publisher with address in r2077[15], connection aborted.

Remedy: - check the PROFIBUS cables.
- check the state of the Publisher that has the aborted connection.
See also: r2077 (PROFIBUS diagnostics peer-to-peer data transfer addresses)

Reaction upon A: NONE

Acknowl. upon A: NONE

F01950 (N, A) PB/PN clock cycle synchronous operation synchronization unsuccessful

Message value: -

Drive object: All objects

Reaction: OFF1 (NONE)

Acknowledge: IMMEDIATELY (POWER ON)

Cause: Synchronization of the internal clock cycle to the global control telegram has failed. The internal clock cycle exhibits an unexpected shift.

Remedy: Only for internal Siemens troubleshooting.
Note:
PB: PROFIBUS
PN: PROFINET

Reaction upon N: NONE

Acknowl. upon N: NONE

Reaction upon A: NONE

Acknowl. upon A: NONE

© Siemens AG 2012 All Rights Reserved

F01951 CU DRIVE-CLiQ: Synchronization application clock cycle missing

Message value: %1

Drive object: All objects

Reaction: OFF2 (NONE)

Acknowledge: IMMEDIATELY (POWER ON)

Cause: If DRIVE-CLiQ components with different application clock cycle are operated on a DRIVE-CLiQ port, this requires synchronization with the Control Unit. This synchronization routine was unsuccessful.
Fault value (r0949, interpret decimal):
Only for internal Siemens troubleshooting.

Remedy: - carry out a POWER ON (power off/on) for all components.
- upgrade the software of the DRIVE-CLiQ components.
- upgrade the Control Unit software.
Note:
If a Controller Extension is being used (e.g. CX32, NX10), then the following applies:
Check whether the Controller Extension is issuing error messages, and if required, remove these.

F01952 CU DRIVE-CLiQ: Synchronization of component not supported

Message value: %1

Drive object: All objects

Reaction: OFF2 (NONE)

Acknowledge: IMMEDIATELY (POWER ON)

Cause: The existing system configuration requires that the connected DRIVE-CLiQ components support the synchronization between the basic clock cycle, DRIVE-CLiQ clock cycle and the application clock cycle.
However, not all DRIVE-CLiQ components have this functionality.
Fault value (r0949, interpret decimal):
Component number of the first faulty DRIVE-CLiQ component.

Remedy: Upgrade the firmware of the component specified in the fault value.
Note:
If required, also upgrade additional components in the DRIVE-CLiQ line.

A01953 CU DRIVE-CLiQ: Synchronization not completed

Message value: %1

Drive object: All objects

Reaction: NONE

Acknowledge: NONE

Cause: After the drive system is powered up, the synchronization between the basic clock cycle, DRIVE-CLiQ clock cycle and application clock cycle was started but was not completed within the selected time tolerance.
Alarm value (r2124, interpret decimal):
Only for internal Siemens troubleshooting.

Remedy: Carry out a POWER ON (power off/on) for all components.
If the error occurs after the drive sampling times were changed, and if a Terminal Module 31 (TM31) is being used, the sampling times (p0115, p4099) should be set as integer multiples to the drive clock cycles (p0115).

F01954 CU DRIVE-CLiQ: Synchronization unsuccessful

Message value: %1

Drive object: All objects

Reaction: OFF2

Acknowledge: IMMEDIATELY (POWER ON)

Cause: Synchronization between the basic clock cycle, DRIVE-CLiQ clock cycle and application clock cycle was started and was not able to be successfully completed (e.g. after switch-on).
Fault value (r0949, interpret decimal):
Only for internal Siemens troubleshooting.

Remedy: 1. Remove the cause of a possible DRIVE-CLiQ fault.
2. Initiate a new synchronization, e.g. as follows:
- remove the PROFIBUS master and re-insert again.
- restart the PROFIBUS master.
- switch-off the Control Unit and switch-on again.

© Siemens AG 2012 All Rights Reserved

- carry out a Control Unit hardware reset (RESET button, p0972).
- carry out a parameter reset and download the saved parameters (p0009 = 30, p0976 = 2, 3).

A01955 CU DRIVE-CLiQ: Synchronization DO not completed

Message value: %1
Drive object: All objects
Reaction: NONE
Acknowledge: NONE
Cause: After the drive system is powered up, the synchronization between the basic clock cycle, DRIVE-CLiQ clock cycle and application clock cycle was started but was not completed within the selected time tolerance.
Alarm value (r2124, interpret decimal):
Only for internal Siemens troubleshooting.
Remedy: Carry out a POWER ON (power off/on) for all components of the DO.

A01980 PN: Interruption cyclic connection

Message value: %1
Drive object: All objects
Reaction: NONE
Acknowledge: NONE
Cause: The cyclic connection to a PROFINET controller is interrupted.
Alarm value (r2124, interpret decimal):
Number of the interrupted connection.
Remedy: Establish the PROFINET connection and activate the PROFINET controller in the cyclic mode.

A01981 PN: Maximum number of controllers exceeded

Message value: Info. 1: %1, info. 2: %2
Drive object: All objects
Reaction: NONE
Acknowledge: NONE
Cause: A controller attempts to establish a connection to the drive, and as a consequence exceeds the permitted number of PROFINET connections.
The alarm disappears automatically after approx. 30 seconds.
Alarm value (r2124, interpret hexadecimal):
yyyyxxxx hex: yyyy = info. 1, xxxx = info. 2
Info 1 = 0: number of RT connections exceeded
Info 1 > 0: number of IRT connections exceeded
Info 2: permitted number of connections
Remedy: Check the configuration of the PROFINET controllers as well as the p8929 setting.
See also: p8929 (PN remote controller number)

A01982 PROFINET: Second controller missing

Message value: -
Drive object: All objects
Reaction: NONE
Acknowledge: NONE
Cause: The PROFINET function "Shared Device" has been activated (p8929 = 2). However, only the connection to a PROFINET controller is present.
Remedy: Check the configuration of the PROFINET controllers as well as the p8929 setting.
See also: p8929 (PN remote controller number)

A01989 PROFINET: Internal cyclic data transfer error

Message value: %1
Drive object: All objects
Reaction: NONE
Acknowledge: NONE
Cause: The cyclic actual values and/or setpoints were not transferred within the specified times.

© Siemens AG 2012 All Rights Reserved

Alarm value (r2124, interpret hexadecimal):
Only for internal Siemens troubleshooting.

Remedy: Correctly set T_io_input or T_io_output.

A01990 (F) USS: PZD configuration error

Message value: %1

Drive object: All objects

Reaction: NONE

Acknowledge: NONE

Cause: The configuration of the process data (PZD) for the USS protocol is incorrect.
Alarm value (r2124, interpret decimal):
2: PZD amount (p2022) too great for the first drive object (p978[0]).
The number of possible PZD items in a drive object is determined by the number of indices in r2050/p2051.

Remedy: Re alarm value = 2:
Check the amount of USS PZD (p2022) and the maximum PZD amount (r2050/p2051) for the first drive object (p0978[0]).

Reaction upon F: NONE (OFF1)

Acknowl. upon F: IMMEDIATELY

A02000 Function generator: Start not possible

Message value: -

Drive object: All objects

Reaction: NONE

Acknowledge: NONE

Cause: The function generator has already been started.

Remedy: Stop the function generator and restart again if necessary.
Note:
The alarm is reset as follows:
- remove the cause of this alarm.
- restart the function generator.
See also: p4800 (Function generator control)

A02005 Function generator: Drive does not exist

Message value: %1

Drive object: All objects

Reaction: NONE

Acknowledge: NONE

Cause: The drive object specified for connection does not exist.
See also: p4815 (Function generator drive number)

Remedy: Use the existing drive object with the corresponding number.
Note:
The alarm is reset as follows:
- remove the cause of this alarm.
- restart the function generator.
See also: p4815 (Function generator drive number)

A02006 Function generator: No drive specified for connection

Message value: -

Drive object: All objects

Reaction: NONE

Acknowledge: NONE

Cause: No drive specified for connection in p4815.
See also: p4815 (Function generator drive number)

© Siemens AG 2012 All Rights Reserved

Remedy: At least one drive to be connected must be specified in p4815.
Note:
The alarm is reset as follows:
- remove the cause of this alarm.
- restart the function generator.
See also: p4815 (Function generator drive number)

A02007 Function generator: Drive not SERVO / VECTOR / DC_CTRL

Message value: %1
Drive object: All objects
Reaction: NONE
Acknowledge: NONE
Cause: The drive object specified for connection is not a SERVO / VECTOR or DC_CTRL.
See also: p4815 (Function generator drive number)
Remedy: Use a SERVO / VECTOR / DC_CTRL drive object with the corresponding number.
Note:
The alarm is reset as follows:
- remove the cause of this alarm.
- restart the function generator.

A02008 Function generator: Drive specified a multiple number of times

Message value: %1
Drive object: All objects
Reaction: NONE
Acknowledge: NONE
Cause: The drive object specified for connection is already specified.
Alarm value (r2124, interpret decimal):
Drive object number of the drive object that is specified a multiple number of times.
Remedy: Specify a different drive object.
Note:
The alarm is reset as follows:
- remove the cause of this alarm.
- restart the function generator.

A02009 Function generator: Illegal mode

Message value: %1
Drive object: All objects
Reaction: NONE
Acknowledge: NONE
Cause: The set operating mode (p1300) of the drive object is not permissible when using the function generator.
Alarm value (r2124, interpret decimal):
Number of the drive object involved.
Remedy: Change the operating mode for this drive object to p1300 = 20 (encoderless speed control) or p1300 = 21 (speed control with encoder).
Note:
The alarm is reset as follows:
- remove the cause of this alarm.
- restart the function generator.

A02010 Function generator: Speed setpoint from the drive is not zero

Message value: -
Drive object: All objects
Reaction: NONE
Acknowledge: NONE
Cause: The speed setpoint of a drive selected for connection is greater than the value for the standstill detection set using p1226.

© Siemens AG 2012 All Rights Reserved

Remedy: For all of the drives specified for connection, set the speed setpoints to zero.
Note:
The alarm is reset as follows:
- remove the cause of this alarm.
- restart the function generator.

A02011 Function generator: The actual drive speed is not zero

Message value: -
Drive object: All objects
Reaction: NONE
Acknowledge: NONE
Cause: The speed actual value of a drive selected for connection is greater than the value for the standstill detection set using p1226.
Remedy: Set the relevant drives to zero speed before starting the function generator.
Note:
The alarm is reset as follows:
- remove the cause of this alarm.
- restart the function generator.

A02015 Function generator: Drive enable signals missing

Message value: -
Drive object: All objects
Reaction: NONE
Acknowledge: NONE
Cause: The master control and/or enable signals are missing to connect to the specified drive.
See also: p4815 (Function generator drive number)
Remedy: Fetch the master control to the specified drive object and set all enable signals.
Note:
The alarm is reset as follows:
- remove the cause of this alarm.
- restart the function generator.

A02016 Function generator: Magnetizing running

Message value: %1
Drive object: All objects
Reaction: NONE
Acknowledge: NONE
Cause: Magnetizing has not yet been completed on a drive object specified for connection.
Alarm value (r2124, interpret decimal):
Number of the drive object involved.
See also: p4815 (Function generator drive number)
Remedy: Wait for magnetizing of the motor (r0056.4).
Note:
The alarm is reset as follows:
- restart the function generator.
See also: r0056 (Status word, closed-loop control)

A02020 Function generator: Parameter cannot be changed

Message value: -
Drive object: All objects
Reaction: NONE
Acknowledge: NONE
Cause: This parameter setting cannot be changed when the function generator is active (p4800 = 1).
See also: p4810, p4812, p4813, p4815, p4820, p4821, p4822, p4823, p4824, p4825, p4826, p4827, p4828, p4829

© Siemens AG 2012 All Rights Reserved

Remedy: - stop the function generator before parameterizing (p4800 = 0).
- if required, start the function generator (p4800 = 1).
Note:
The alarm is reset as follows:
- remove the cause of this alarm.
- restart the function generator.
See also: p4800 (Function generator control)

A02025 Function generator: Period too short

Message value: -
Drive object: All objects
Reaction: NONE
Acknowledge: NONE
Cause: The value for the period is too short.
See also: p4821 (Function generator period)
Remedy: Check and adapt the value for the period.
Note:
The alarm is reset as follows:
- remove the cause of this alarm.
- restart the function generator.
See also: p4821 (Function generator period)

A02026 Function generator: Pulse width too high

Message value: -
Drive object: All objects
Reaction: NONE
Acknowledge: NONE
Cause: The selected pulse width is too high.
The pulse width must be less than the period duration.
See also: p4822 (Function generator pulse width)
Remedy: Reduce pulse width.
Note:
The alarm is reset as follows:
- remove the cause of this alarm.
- restart the function generator.
See also: p4821 (Function generator period), p4822 (Function generator pulse width)

A02030 Function generator: Physical address equals zero

Message value: -
Drive object: All objects
Reaction: NONE
Acknowledge: NONE
Cause: The specified physical address is zero.
See also: p4812 (Function generator physical address)
Remedy: Set a physical address with a value other than zero.
Note:
The alarm is reset as follows:
- remove the cause of this alarm.
- restart the function generator.
See also: p4812 (Function generator physical address)

A02040 Function generator: Illegal value for offset

Message value: -
Drive object: All objects
Reaction: NONE
Acknowledge: NONE
Cause: The value for the offset is higher than the value for the upper limit or lower than the value for the lower limit.
See also: p4826 (Function generator offset)

© Siemens AG 2012 All Rights Reserved

Remedy: Adjust the offset value accordingly.
Note:
The alarm is reset as follows:
- remove the cause of this alarm.
- restart the function generator.
See also: p4826 (Function generator offset), p4828 (Function generator lower limit), p4829 (Function generator upper limit)

A02041 Function generator: Illegal value for bandwidth

Message value: -
Drive object: All objects
Reaction: NONE
Acknowledge: NONE
Cause: The bandwidth referred to the time slice clock cycle of the function generator has either been set too low or too high.
Depending on the time slice clock cycle, the bandwidth is defined as follows:
Bandwidth_max = 1 / (2 x time slice clock cycle)
Bandwidth_min = Bandwidth_max / 100000
Example:
Assumption: p4830 = 125 µs
--> Bandwidth_max = 1 / (2 x 125 µs) = 4000 Hz
--> Bandwidth_min = 4000 Hz / 100000 = 0.04 Hz
Note:
p4823: Function generator bandwidth
p4830: Function generator time slice clock cycle
See also: p4823 (Function generator bandwidth), p4830 (Function generator time slice cycle)
Remedy: Check the value for the bandwidth and adapt accordingly.
Note:
The alarm is reset as follows:
- remove the cause of this alarm.
- restart the function generator.

A02047 Function generator: Time slice clock cycle invalid

Message value: -
Drive object: All objects
Reaction: NONE
Acknowledge: NONE
Cause: The time slice clock cycle selected does not match any of the existing time slices.
See also: p4830 (Function generator time slice cycle)
Remedy: Enter an existing time slice clock cycle. The existing time slices can be read out via p7901.
Note:
The alarm is reset as follows:
- remove the cause of this alarm.
- restart the function generator.
See also: r7901 (Sampling times)

A02050 Trace: Start not possible

Message value: -
Drive object: All objects
Reaction: NONE
Acknowledge: NONE
Cause: The trace has already been started.
See also: p4700 (Trace control)
Remedy: Stop the trace and, if necessary, start again.

© Siemens AG 2012 All Rights Reserved

A02055 Trace: Recording time too short

Message value: -
Drive object: All objects
Reaction: NONE
Acknowledge: NONE
Cause: The trace duration is too short.
The minimum is twice the value of the trace clock cycle.
See also: p4721 (Trace recording time)
Remedy: Check the selected recording time and, if necessary, adjust.

A02056 Trace: Recording cycle too short

Message value: -
Drive object: All objects
Reaction: NONE
Acknowledge: NONE
Cause: The selected recording cycle is shorter than the selected basic clock cycle 0 (p0110[0]).
See also: p4720 (Trace recording cycle)
Remedy: Increase the value for the trace cycle.

A02057 Trace: Time slice clock cycle invalid

Message value: -
Drive object: All objects
Reaction: NONE
Acknowledge: NONE
Cause: The time slice clock cycle selected does not match any of the existing time slices.
See also: p4723 (Trace time slice cycle)
Remedy: Enter an existing time slice clock cycle. The existing time slices can be read out via p7901.
See also: r7901 (Sampling times)

A02058 Trace: Time slice clock cycle for endless trace not valid

Message value: -
Drive object: All objects
Reaction: NONE
Acknowledge: NONE
Cause: The selected time slice clock cycle cannot be used for the endless trace
See also: p4723 (Trace time slice cycle)
Remedy: Enter the clock cycle of an existing time slice with a cycle time >= 2 ms for up to 4 recording channels or >= 4 ms from 5 recording channels per trace.
The existing time slices can be read out via p7901.
See also: r7901 (Sampling times)

A02059 Trace: Time slice clock cycle for 2 x 8 recording channels not valid

Message value: -
Drive object: All objects
Reaction: NONE
Acknowledge: NONE
Cause: The selected time slice clock cycle cannot be used for more than 4 recording channels.
See also: p4723 (Trace time slice cycle)
Remedy: Enter the clock cycle of an existing time slice with a cycle time >= 4 ms or reduce the number of recording channels to 4 per trace.
The existing time slices can be read out via p7901.
See also: r7901 (Sampling times)

© Siemens AG 2012 All Rights Reserved

A02060 Trace: Signal to be traced missing

Message value: -
Drive object: All objects
Reaction: NONE
Acknowledge: NONE
Cause: - a signal to be traced was not specified.
- the specified signals are not valid.
See also: p4730 (Trace record signal 0), p4731 (Trace record signal 1), p4732 (Trace record signal 2), p4733 (Trace record signal 3)
Remedy: - specify the signal to be traced.
- check whether the relevant signal can be traced.

A02061 Trace: Invalid signal

Message value: -
Drive object: All objects
Reaction: NONE
Acknowledge: NONE
Cause: - the specified signal does not exist.
- the specified signal can no longer be traced (recorded).
See also: p4730 (Trace record signal 0), p4731 (Trace record signal 1), p4732 (Trace record signal 2), p4733 (Trace record signal 3)
Remedy: - specify the signal to be traced.
- check whether the relevant signal can be traced.

A02062 Trace: Invalid trigger signal

Message value: -
Drive object: All objects
Reaction: NONE
Acknowledge: NONE
Cause: - a trigger signal was not specified.
- the specified signal does not exist.
- the specified signal is not a fixed-point signal.
- the specified signal cannot be used as a trigger signal for the trace.
See also: p4711 (Trace trigger signal)
Remedy: Specify a valid trigger signal.

A02063 Trace: Invalid data type

Message value: %1
Drive object: All objects
Reaction: NONE
Acknowledge: NONE
Cause: The specified data type to select a signal using a physical address is invalid.
See also: p4711 (Trace trigger signal), p4730 (Trace record signal 0), p4731 (Trace record signal 1), p4732 (Trace record signal 2), p4733 (Trace record signal 3)
Remedy: Use a valid data type.

A02070 Trace: Parameter cannot be changed

Message value: -
Drive object: All objects
Reaction: NONE
Acknowledge: NONE
Cause: The trace parameter settings cannot be changed when the trace is active.
See also: p4700, p4710, p4711, p4712, p4713, p4714, p4715, p4716, p4720, p4721, p4722, p4730, p4731, p4732, p4733, p4780, p4781, p4782, p4783, p4789, p4795
Remedy: - stop the trace before parameterization.
- if required, start the trace.

© Siemens AG 2012 All Rights Reserved

A02075 Trace: Pretrigger time too long

Message value: -
Drive object: All objects
Reaction: NONE
Acknowledge: NONE
Cause: The selected pretrigger time must be shorter than the trace time.
See also: p4721 (Trace recording time), p4722 (Trace trigger delay)
Remedy: Check the pretrigger time setting and change if necessary.

F02080 Trace: Parameterization deleted due to unit changeover

Message value: -
Drive object: All objects
Reaction: NONE
Acknowledge: IMMEDIATELY
Cause: The trace parameterization in the drive unit was deleted due to a unit changeover or a change in the reference parameters.
Remedy: Restart trace.

A02099 Trace: Insufficient Control Unit memory

Message value: -
Drive object: All objects
Reaction: NONE
Acknowledge: NONE
Cause: The memory space still available on the Control Unit is no longer sufficient for the trace function.
Remedy: Reduce the memory required, e.g. as follows:
- reduce the trace time.
- increase the trace clock cycle.
- reduce the number of signals to be traced.
See also: r4708 (Trace memory space required), r4799 (Trace memory location free)

A02100 Drive: Computing dead time current controller too short

Message value: %1
Drive object: VECTOR_G
Reaction: NONE
Acknowledge: NONE
Cause: The value in p0118 produces a dead time of one clock cycle because it is prior to setpoint availability.
Possible causes:
- A parameter backup with a version higher than 4.3 was loaded to a version less than or equal to 4.3.
- The system properties after replacing a component no longer match the parameter assignment.
Alarm value (r2134, floating point):
The minimum value for p0118 where a dead time no longer occurs.
Remedy: - set p0118 to zero.
- set p0118 to a value greater than or equal to the alarm value (for p1810.11 = 1)
- set p0117 (from the device) to an automatic setting (p0117 = 1).
- check the firmware versions of the components involved.
See also: p0117 (Current controller computing dead time mode), p0118 (Current controller computing dead time)

A02150 OA: Application cannot be loaded

Message value: %1
Drive object: All objects
Reaction: NONE
Acknowledge: NONE
Cause: The system was not able to load an OA application.
Alarm value (r2124, interpret hexadecimal):
Only for internal Siemens troubleshooting.

© Siemens AG 2012 All Rights Reserved

Remedy: - carry out a POWER ON (power off/on) for all components.
- upgrade firmware to later version.
- contact the Hotline.
Note:
OA: Open Architecture
See also: r4950, r4955, p4956, r4957

F02151 (A) OA: Internal software error

Message value: %1
Drive object: All objects
Reaction: Infeed: OFF2 (NONE, OFF1)
Vector: OFF2 (NONE, OFF1, OFF3)
Acknowledge: IMMEDIATELY (POWER ON)
Cause: An internal software error has occurred within an OA application.
Fault value (r0949, interpret hexadecimal):
Only for internal Siemens troubleshooting.
Remedy: - carry out a POWER ON (power off/on) for all components.
- upgrade firmware to later version.
- contact the Hotline.
- replace the Control Unit.
Note:
OA: Open Architecture
See also: r4950, r4955, p4956, r4957
Reaction upon A: NONE
Acknowl. upon A: NONE

F02152 (A) OA: Insufficient memory

Message value: %1
Drive object: All objects
Reaction: OFF1
Acknowledge: IMMEDIATELY (POWER ON)
Cause: Too many functions have been configured on this Control Unit (e.g. too many drives, function modules, data sets, OA applications, blocks, etc).
Fault value (r0949, interpret decimal):
Only for internal Siemens troubleshooting.
Remedy: - change the configuration on this Control Unit (e.g. fewer drives, function modules, data sets, OA applications, blocks, etc).
- use an additional Control Unit.
Note:
OA: Open Architecture
Reaction upon A: NONE
Acknowl. upon A: NONE

F03000 NVRAM fault on action

Message value: %1
Drive object: All objects
Reaction: NONE
Acknowledge: IMMEDIATELY
Cause: A fault occurred during execution of action p7770 = 1, 2 for the NVRAM data.
Fault value (r0949, interpret hexadecimal):
yyxx hex: yy = fault cause, xx = application ID
yy = 1:
The action p7770 = 1 is not supported by this version if Drive Control Chart (DCC) is activated for the drive object concerned.
yy = 2:
The data length of the specified application is not the same in the NVRAM and the backup.
yy = 3:
The data checksum in p7774 is not correct.

© Siemens AG 2012 All Rights Reserved

yy = 4:
No data available to load.
See also: p7770 (NVRAM action)

Remedy: Perform the remedy according to the results of the troubleshooting.
If necessary, start the action again.

F03001 NVRAM checksum incorrect

Message value: %1
Drive object: All objects
Reaction: NONE
Acknowledge: IMMEDIATELY
Cause: A checksum error occurred when evaluating the non-volatile data (NVRAM) on the Control Unit.
The NVRAM data affected was deleted.
Remedy: Carry out a POWER ON (power off/on) for all components.

F03500 (A) TM: Initialization

Message value: %1
Drive object: All objects
Reaction: OFF1 (OFF2)
Acknowledge: IMMEDIATELY (POWER ON)
Cause: When initializing the Terminal Modules, the terminals of the Control Unit or the Terminal Board 30, an internal software error has occurred.
Fault value (r0949, interpret decimal):
yxxx dex
y = Only for internal Siemens troubleshooting
xxx = component number (p0151)
Remedy: - power down/power up the power supply for the Control Unit.
- check the DRIVE-CLiQ connection.
- if required, replace the Terminal Module.
The Terminal Module should be directly connected to a DRIVE-CLiQ socket of the Control Unit.
If the fault occurs again, replace the Terminal Module.
Reaction upon A: NONE
Acknowl. upon A: NONE

A03501 TM: Sampling time change

Message value: -
Drive object: All objects
Reaction: NONE
Acknowledge: NONE
Cause: The sampling times of the inputs/outputs were changed.
This change only becomes valid after the next boot.
Remedy: Carry out a POWER ON.

F03505 (N, A) TM: Analog input wire breakage

Message value: %1
Drive object: All objects
Reaction: OFF1 (NONE, OFF2)
Acknowledge: IMMEDIATELY (POWER ON)
Cause: The wire-break monitoring for an analog input has responded.
The input current of the analog input has exceeded the threshold value parameterized in p4061[x].
Index x = 0: Analog input 0 (X522.1 to .3)
Index x = 1: Analog input 1 (X522.4 to .5)
Fault value (r0949, interpret decimal):
yxxx dec
y = analog input (0 = analog input 0 (AI 0), 1 = analog input 1 (AI 1))
xxx = component number (p0151)

© Siemens AG 2012 All Rights Reserved

Note:
For the following analog input type, the wire breakage monitoring is active:
p4056[x] = 3 (unipolar current input monitored (+4 ... +20 mA)

Remedy: - check the wiring for interruptions.
- Check the magnitude of the injected current - it is possible that the infed signal is too low.
- Check the load resistor (250 Ohm).
Note:
The input current measured by the Terminal Module can be read out from r4052[x].
For p4056[x] = 3 (unipolar current input monitored (+4 ... +20 mA)) the following applies:
A current less than 4 mA is not displayed in r4052[x] - but instead r4052[x] = 4 mA is output.

Reaction upon N: NONE
Acknowl. upon N: NONE
Reaction upon A: NONE
Acknowl. upon A: NONE

A03506 (F, N) 24 V power supply missing

Message value: %1
Drive object: All objects
Reaction: NONE
Acknowledge: NONE
Cause: The 24 V power supply for the digital outputs (X124) is missing.
Remedy: Check the terminals for the power supply voltage (X124, L1+, M).
Reaction upon F: NONE
Acknowl. upon F: IMMEDIATELY (POWER ON)
Reaction upon N: NONE
Acknowl. upon N: NONE

A03510 (F, N) TM: Calibration data not plausible

Message value: %1
Drive object: B_INF, CU_G130_DP, CU_G130_PN, CU_G150_DP, CU_G150_PN, ENC, HUB, TB30, TM150, TM31, TM54F_MA, TM54F_SL
Reaction: NONE
Acknowledge: NONE
Cause: During ramp-up, the Terminal Module 31 (TM31) calibration data is read in and checked for plausibility.
At least one calibration data point was determined to be invalid.
Alarm value (r2124, interpret binary):
Bit 1: 10 V value, analog input 0 invalid.
Bit 3: 10 V value, analog input 1 invalid.
Bit 4: Offset, analog output 0 invalid.
Bit 5: 10 V value, analog output 0 invalid.
Bit 6: Offset, analog output 1 invalid.
Bit 7: 10 V value, analog input 1 invalid.
Remedy: - power down/power up the power supply for the Control Unit.
- check the DRIVE-CLiQ connection.
Note:
If it reoccurs, then replace the module.
In principle, operation could continue.
The analog channel involved possibly does not achieve the specified accuracy.
Reaction upon F: Infeed: NONE (OFF1, OFF2)
Vector: NONE
Acknowl. upon F: IMMEDIATELY (POWER ON)
Reaction upon N: NONE
Acknowl. upon N: NONE

© Siemens AG 2012 All Rights Reserved

A03510 (F, N) CU: Calibration data not plausible

Message value: %1
Drive object: VECTOR_G
Reaction: NONE
Acknowledge: NONE
Cause: During booting, the calibration data for the analog inputs is read and checked with respect to plausibility.
At least one calibration data point was determined to be invalid.
Remedy: - power down/power up the power supply for the Control Unit.
- check the DRIVE-CLiQ connection.
Note:
If it reoccurs, then replace the module.
In principle, operation could continue.
The analog channel involved possibly does not achieve the specified accuracy.
Reaction upon F: Infeed: NONE (OFF1, OFF2)
Vector: NONE
Acknowl. upon F: IMMEDIATELY (POWER ON)
Reaction upon N: NONE
Acknowl. upon N: NONE

A03550 TM: Speed setpoint filter natural frequency > Shannon frequency

Message value: -
Drive object: All objects
Reaction: NONE
Acknowledge: NONE
Cause: The natural filter frequency of the speed setpoint filter (p1417) is greater than or equal to the Shannon frequency.
The Shannon frequency is calculated according to the following formula:
0.5 / p4099[3]
Remedy: Reduce the natural frequency of the speed setpoint filter (PT2 low pass) (p1417).

F03590 (N, A) TM: Module not ready

Message value: %1
Drive object: All objects
Reaction: Infeed: OFF2 (NONE)
Vector: OFF2 (ENCODER, IASC/DCBRAKE, NONE, OFF1, OFF3, STOP1, STOP2)
Acknowledge: IMMEDIATELY (POWER ON)
Cause: The Terminal Module involved does not send a ready signal and no valid cyclic data.
Fault value (r0949, interpret decimal):
Drive object number of the Terminal Module involved.
Remedy: - check the 24 V power supply.
- check the DRIVE-CLiQ connection.
- check whether the sampling time of the drive object involved is not equal to zero (p4099[0]).
Reaction upon N: NONE
Acknowl. upon N: NONE
Reaction upon A: NONE
Acknowl. upon A: NONE

A05000 (N) Power unit: Overtemperature heat sink AC inverter

Message value: -
Drive object: B_INF, VECTOR_G
Reaction: NONE
Acknowledge: NONE
Cause: The alarm threshold for overtemperature at the inverter heat sink has been reached. The response is set using p0290.
If the temperature of the heat sink increases by an additional 5 K, then fault F30004 is initiated.

© Siemens AG 2012 All Rights Reserved

Remedy: Check the following:
- is the ambient temperature within the defined limit values?
- have the load conditions and the load duty cycle been appropriately dimensioned?
- has the cooling failed?

Reaction upon N: NONE
Acknowl. upon N: NONE

A05001 (N) Power unit: Overtemperature depletion layer chip

Message value: -
Drive object: B_INF
Reaction: NONE
Acknowledge: NONE
Cause: Alarm threshold for overtemperature of the power semiconductor in the AC converter has been reached.
Note:
- The response is set using p0290.
- If the depletion layer temperature increases by an additional 15 K, then fault F30025 is triggered.

Remedy: Check the following:
- is the ambient temperature within the defined limit values?
- have the load conditions and the load duty cycle been appropriately dimensioned?
- has the cooling failed?
- pulse frequency too high?

See also: r0037, p0290 (Power unit overload response)

Reaction upon N: NONE
Acknowl. upon N: NONE

A05001 (N) Power unit: Overtemperature depletion layer chip

Message value: -
Drive object: VECTOR_G
Reaction: NONE
Acknowledge: NONE
Cause: Alarm threshold for overtemperature of the power semiconductor in the AC converter has been reached.
Note:
- The response is set using p0290.
- If the depletion layer temperature increases by an additional 15 K, then fault F30025 is triggered.

Remedy: Check the following:
- is the ambient temperature within the defined limit values?
- have the load conditions and the load duty cycle been appropriately dimensioned?
- has the cooling failed?
- pulse frequency too high?

Note:
If the alarm occurs after reducing the current controller sampling time (p0115[0]) during the motor data identification (standstill measurement), then it is recommended that this is initially performed using the standard sampling time and then the sampling time should be subsequently changed over.
See also: r0037, p0290 (Power unit overload response)

Reaction upon N: NONE
Acknowl. upon N: NONE

A05002 (N) Power unit: Air intake overtemperature

Message value: -
Drive object: B_INF, VECTOR_G
Reaction: NONE
Acknowledge: NONE
Cause: The alarm threshold for the air intake overtemperature has been reached. For air-cooled power units, the threshold is 42 °C (hysteresis 2 K). The response is set using p0290.
If the air intake temperature increases by an additional 13 K, then fault F30035 is output.

Remedy: Check the following:
- is the ambient temperature within the defined limit values?
- has the fan failed? Check the direction of rotation.

© Siemens AG 2012 All Rights Reserved

Reaction upon N: NONE
Acknowl. upon N: NONE

A05003 (N) Power unit: Internal overtemperature

Message value: -
Drive object: B_INF, VECTOR_G
Reaction: NONE
Acknowledge: NONE
Cause: The alarm threshold for internal overtemperature has been reached.
If the temperature inside the power unit increases by an additional 5 K, then fault F30036 is triggered.
Remedy: Check the following:
- is the ambient temperature within the defined limit values?
- has the fan failed? Check the direction of rotation.

Reaction upon N: NONE
Acknowl. upon N: NONE

A05004 (N) Power unit: Rectifier overtemperature

Message value: -
Drive object: B_INF, VECTOR_G
Reaction: NONE
Acknowledge: NONE
Cause: The alarm threshold for the overtemperature of the rectifier has been reached. The response is set using p0290.
If the temperature of the rectifier increases by an additional 5 K, then fault F30037 is triggered.
Remedy: Check the following:
- is the ambient temperature within the defined limit values?
- have the load conditions and the load duty cycle been appropriately dimensioned?
- has the fan failed? Check the direction of rotation.
- has a phase of the line supply failed?
- is an arm of the supply (incoming) rectifier defective?

Reaction upon N: NONE
Acknowl. upon N: NONE

A05005 Cooling unit: Cooling medium flow rate too low

Message value: %1
Drive object: B_INF, VECTOR_G
Reaction: NONE
Acknowledge: NONE
Cause: Cooling unit: Alarm - flow rate has fallen below the alarm value
Remedy: Check the feedback signals and parameter assignment (p0260 ... p0267).
Check the coolant feed.

A05006 (N) Power unit: Overtemperature thermal model

Message value: -
Drive object: VECTOR_G
Reaction: NONE
Acknowledge: NONE
Cause: The temperature difference between the chip and heat sink has exceeded the permissible limit value (blocksize power units only).
Depending on p0290, an appropriate overload response is initiated.
See also: r0037
Remedy: Not necessary.
The alarm disappears automatically once the limit value is undershot.
Note:
If the alarm does not disappear automatically and the temperature continues to rise, this can result in fault F30024.
See also: p0290 (Power unit overload response)

Reaction upon N: NONE
Acknowl. upon N: NONE

© Siemens AG 2012 All Rights Reserved

N05007 (A) Power unit: Overtemperature thermal model (chassis PU)

Message value: -
Drive object: VECTOR_G
Reaction: NONE
Acknowledge: NONE
Cause: The temperature difference between the chip and heat sink has exceeded the permissible limit value (r0293) (chassis power units only).
Depending on p0290, an appropriate overload response is initiated.
See also: r0037, r0293 (Power unit alarm threshold model temperature)
Remedy: Not necessary.
The alarm disappears automatically once the limit value is undershot.
See also: p0290 (Power unit overload response)
Reaction upon A: NONE
Acknowl. upon A: NONE

F05050 Parallel circuit: Pulse enable in spite of pulse inhibit

Message value: %1
Drive object: B_INF, VECTOR_G
Reaction: Infeed: OFF2 (NONE, OFF1)
Vector: OFF2 (NONE, OFF1, OFF3, STOP1, STOP2)
Acknowledge: IMMEDIATELY
Cause: A power unit signals that the pulses are enabled although the pulses are inhibited.
Fault value (r0949, interpret decimal):
Number of the power unit involved.
Remedy: The power unit is defective and must be replaced.

F05051 Parallel circuit: Power unit pulse enable missing

Message value: %1
Drive object: B_INF, VECTOR_G
Reaction: Infeed: OFF2 (NONE, OFF1)
Vector: OFF2 (NONE, OFF1, OFF3, STOP1, STOP2)
Acknowledge: IMMEDIATELY
Cause: For one or several power units, the pulses were not able to be enabled.
Fault value (r0949, interpret decimal):
Number of the power unit involved.
Remedy: - acknowledge power unit faults that are still present.
- inhibit the pulses of the power unit involved (p7001).

A05052 (F) Parallel circuit: Illegal current dissymmetry

Message value: %1
Drive object: B_INF, VECTOR_G
Reaction: NONE
Acknowledge: NONE
Cause: The deviation of the individual currents of the power units exceeds the alarm threshold specified in p7010.
Alarm value (r2124, interpret decimal):
1: Phase U.
2: Phase V.
3: Phase W.
Remedy: - inhibit the pulses of the faulted power unit (p7001).
- check the connecting cables. Loose contacts can cause current spikes.
- the motor reactors are non-symmetrical or faulty and must be replaced.
- the CTs must be calibrated or replaced.
Reaction upon F: Infeed: NONE (OFF1, OFF2)
Vector: NONE (OFF1, OFF2, OFF3, STOP1, STOP2)
Acknowl. upon F: IMMEDIATELY

© Siemens AG 2012 All Rights Reserved

A05053 (F) Parallel circuit: Inadmissible DC link voltage dissymmetry

Message value: -
Drive object: B_INF, VECTOR_G
Reaction: NONE
Acknowledge: NONE
Cause: The deviation of the DC link voltage measured values exceeds the alarm threshold specified in p7011.
Remedy: - inhibit the pulses of the faulted power unit (p7001).
- check the DC link connecting cables.
- the DC link voltage measurement is incorrect and must be calibrated or renewed.
Reaction upon F: Infeed: NONE (OFF1, OFF2)
Vector: NONE (OFF1, OFF2, OFF3, STOP1, STOP2)
Acknowl. upon F: IMMEDIATELY

A05054 Parallel circuit: Power unit de-activated

Message value: %1
Drive object: B_INF, VECTOR_G
Reaction: NONE
Acknowledge: NONE
Cause: For the drive object involved, fewer power units connected in parallel are active than exist in the target topology.
Operation is only possible at reduced power (power derating).
Remedy: Re-activate the de-activated power units if required.
See also: p0125 (Activate/de-activate power unit components), p0895 (Activate/de-activate power unit components), p0897 (Parking axis selection)

F05055 Parallel connection: Power units with illegal code numbers

Message value: Parameter: %1
Drive object: B_INF
Reaction: OFF2 (NONE)
Acknowledge: IMMEDIATELY
Cause: The code numbers of the power units are not permissible.
For parallel circuit configurations, only power units with identical power unit data may be used.
Possible causes:
- The code numbers of the power units do not match.
For booksize drive units, the following additionally applies:
- a parallel connection is not possible for the power units being used.
- there are too many power units being used in the parallel connection.
Fault value (r0949, interpret decimal):
Parameter in which the inadmissible power unit code number was detected.
Remedy: - Use power units with the same code number.
For booksize drive units, the following additionally applies:
- use power units which are permitted for a parallel connection.
- reduce the number of power units being used in the parallel connection.

F05055 Parallel connection: Power units with illegal code numbers

Message value: Parameter: %1
Drive object: VECTOR_G
Reaction: OFF2 (NONE)
Acknowledge: IMMEDIATELY
Cause: The code numbers of the power units do not match.
Fault value (r0949, interpret decimal):
Parameter in which the first different power unit code number was detected.
Remedy: Use power units with the same code number.
For parallel circuit configurations, only power units with identical power unit data may be used.

© Siemens AG 2012 All Rights Reserved

F05056 Parallel circuit: Power unit EPROM versions differ

Message value: Parameter: %1
Drive object: B_INF, VECTOR_G
Reaction: OFF2 (NONE)
Acknowledge: IMMEDIATELY
Cause: The EEPROM versions of the power units do not match.
Fault value (r0949, interpret decimal):
Parameter in which the first different version number was detected.
Remedy: Use power units with the same EPROM version.
For parallel circuit configurations, only power units with identical EEPROM versions may be used.

F05057 Parallel circuit: Power unit firmware versions differ

Message value: Parameter: %1
Drive object: B_INF, VECTOR_G
Reaction: OFF2 (NONE)
Acknowledge: IMMEDIATELY
Cause: The firmware versions of the power units connected in parallel do not match.
Fault value (r0949, interpret decimal):
Parameter in which the first different version number was detected.
Remedy: Use power units with the same firmware version.
For parallel circuit configurations, only power units with identical firmware versions may be used.

F05058 Parallel circuit: VSM EEPROM versions differ

Message value: Parameter: %1
Drive object: B_INF, VECTOR_G
Reaction: NONE
Acknowledge: IMMEDIATELY
Cause: The EEPROM versions of the Voltage Sensing Modules (VSM) do not match.
Fault value (r0949, interpret decimal):
Parameter in which the first different version number was detected.
Remedy: For parallel circuit configurations, only Voltage Sensing Modules (VSM) with identical EEPROM versions may be used.

F05059 Parallel circuit: VSM firmware versions differ

Message value: Parameter: %1
Drive object: B_INF, VECTOR_G
Reaction: NONE
Acknowledge: IMMEDIATELY
Cause: The firmware versions of the Voltage Sensing Module (VSM) do not match.
Fault value (r0949, interpret decimal):
Parameter in which the first different version number was detected.
Remedy: For parallel circuit configurations, only Voltage Sensing Modules (VSM) with identical firmware versions may be used.

F05060 Parallel circuit: Power unit firmware version does not match

Message value: Parameter: %1
Drive object: B_INF, VECTOR_G
Reaction: OFF2
Acknowledge: IMMEDIATELY
Cause: Firmware from version V02.30.01.00 is required when connecting the power units in parallel.
Remedy: Update the firmware of the power units (at least V02.30.01.00).

© Siemens AG 2012 All Rights Reserved

F05061 Infeed, number of VSM

Message value: %1
Drive object: B_INF, VECTOR_G
Reaction: NONE
Acknowledge: IMMEDIATELY
Cause: The number of active Voltage Sensing Modules (VSM) for the drive object infeed with chassis power units is not correct.
For A_Infeed, each active power unit must be assigned an active VSM also for a parallel circuit configuration.
For S_Infeed, the active drive object, must be assigned at least one active VSM.
Fault value (r0949, interpret decimal):
Number of VSMs that are currently assigned to the drive object.
Remedy: Adapts the number of active Voltage Sensing Modules (VSM).

F05064 Parallel connection: Pulse synchronization error

Message value: -
Drive object: VECTOR_G
Reaction: OFF2 (OFF1, OFF3)
Acknowledge: POWER ON (IMMEDIATELY)
Cause: The pulse synchronization of at least one of the power units connected in parallel is incorrect.
Remedy: Restart the drive system.

F06000 Infeed: Precharging monitoring time expired

Message value: -
Drive object: B_INF
Reaction: OFF2 (OFF1)
Acknowledge: IMMEDIATELY
Cause: After the line contactor closes the power unit does not signal the READY state within the monitoring time (p0857).
The end of the DC link pre-charging was not able to be completed for one of the following reasons:
1) There is no line supply voltage connected.
2) The line contactor/line side switch has not been closed.
3) The line supply voltage is too low.
4) Line supply voltage incorrectly set (p0210).
5) The pre-charging resistors are overheated as there were too many pre-charging operations per time unit.
6) The pre-charging resistors are overheated as the DC link capacitance is too high.
7) The pre-charging resistors are overheated because when there is no "ready for operation" (r0863.0) of the infeed unit, power is taken from the DC link.
8) The pre-charging resistors are overheated as the line contactor was closed during the DC link fast discharge through the Braking Module.
9) The DC link has either a ground fault or a short-circuit.
10) The pre-charging circuit is possibly defective (only for chassis units).
See also: p0210 (Drive unit line supply voltage), p0857 (Power unit monitoring time)
Remedy: In general:
- check the line supply voltage at the connecting terminals.
- check the line supply voltage setting (p0210).
- check the monitoring time and, if required, increase (p0857).
- where relevant, observe additional power unit messages/signals (e.g. F30027).
- the following applies to booksize units: Wait (approx. 8 min.) until the pre-charging resistors have cooled down. For this purpose, preferably disconnect the infeed unit from the line supply.
Re 5):
- carefully observe the permissible pre-charging frequency (refer to the appropriate Equipment Manual).
Re 6):
- check the total capacitance of the DC link and reduce in accordance with the maximum permissible DC-link capacitance if necessary (refer to the appropriate Equipment Manual)
Re 7):
- interconnect the ready-for-operation signal from the infeed unit (r0863.0) in the enable logic of the drives connected to this DC link
Re 8):
- check the connections of the external line contactor. The line contactor must be open during DC-link fast discharge.

© Siemens AG 2012 All Rights Reserved

Re 9):
- check the DC link for ground faults or short circuits.

F06010 Infeed: Power unit EP 24 V missing in operation

Message value: -
Drive object: B_INF
Reaction: OFF2 (OFF1)
Acknowledge: IMMEDIATELY (POWER ON)
Cause: In operation, the pulse enable via terminal EP at the Line Module (X21.3, X21.4) was withdrawn.
Note:
EP: Enable Pulses (pulse enable)
Remedy: - do not open the line side switch in operation - only when the pulses are inhibited.
- check the wiring of terminal EP (X21.3, X21.4) at the Line Module to exclude any poor contacts.

F06100 Infeed: Shutdown due to line supply undervoltage condition

Message value: %1
Drive object: B_INF
Reaction: OFF2 (OFF1)
Acknowledge: IMMEDIATELY (POWER ON)
Cause: The filtered (steady-state) value of the line supply voltage is less than the fault threshold (p0283).
Fault condition: Vrms < p0283 * p0210
Fault value (r0949, floating point):
Actual steady-state line supply voltage.
Remedy: - check the line supply.
- check the line supply voltage (p0210).
- check the threshold value (p0283).

A06105 (F) Infeed: Line supply undervoltage

Message value: %1
Drive object: B_INF
Reaction: NONE
Acknowledge: NONE
Cause: The filtered (steady-state) value of line supply voltage is lower than the alarm threshold (p0282).
Alarm condition: Vrms < p0282 * p0210
Alarm value (r2124, floating point):
Actual steady-state line supply voltage.
Remedy: - check the line supply.
- check the line supply voltage (p0210).
- check the alarm threshold (p0282).
Reaction upon F: NONE (OFF1, OFF2)
Acknowl. upon F: IMMEDIATELY (POWER ON)

F06211 Infeed: Summation current impermissibly high

Message value: %1
Drive object: VECTOR_G
Reaction: OFF2
Acknowledge: IMMEDIATELY (POWER ON)
Cause: The smoothed sum of the phase currents (i1 + i2 + i3) is impermissibly high. The summed current has exceeded the parameterized threshold for the ground fault monitoring (p0287).
Possible causes:
- there is a ground fault that results in a high summation current (r0069.6). The DC component in the line currents can damage/destroy the power unit, reactor, filter or motor!
- the current measurement in the power unit is defective.
Fault value (r0949, floating point):
Smoothed total of the phase currents.
Remedy: - check the line supply for ground faults and remove any that are present.
- check the set threshold for the ground fault monitoring (p0287).
- if required, replace the power unit.

© Siemens AG 2012 All Rights Reserved

A06301 (F) Infeed: Line supply overvoltage

Message value: Line supply voltage: %1
Drive object: B_INF
Reaction: NONE
Acknowledge: NONE
Cause: The filtered (steady-state) value of the rms line supply voltage Vrms is higher than the alarm threshold (p0281).
Alarm condition: Vrms > p0281 * p0210.
Alarm value (r2124, floating point):
Actual steady-state line supply voltage.
Remedy: - check the line supply.
- check the line supply voltage (p0210).
- check the alarm threshold (p0281).
See also: p0210 (Drive unit line supply voltage)
Reaction upon F: NONE (OFF1, OFF2)
Acknowl. upon F: IMMEDIATELY (POWER ON)

F06310 (A) Infeed: Supply voltage (p0210) incorrectly parameterized

Message value: Line supply voltage: %1
Drive object: B_INF
Reaction: NONE (OFF1, OFF2)
Acknowledge: IMMEDIATELY (POWER ON)
Cause: After pre-charging was completed, the line supply voltage Vrms was calculated using the measured DC link voltage.
This voltage Vrms is not within the tolerance range of the supply voltage.
The following applies for the tolerance range: 85 % * p0210 < Vrms < 110 % * p0210
Fault value (r0949, floating point):
Line supply voltage Vrms present.
See also: p0210 (Drive unit line supply voltage)
Remedy: - check the parameterized supply voltage and if required change (p0210).
- check the line supply voltage.
See also: p0210 (Drive unit line supply voltage)
Reaction upon A: NONE
Acknowl. upon A: NONE

F06310 (A) Supply voltage (p0210) incorrectly parameterized

Message value: -
Drive object: VECTOR_G
Reaction: NONE (OFF1, OFF2)
Acknowledge: IMMEDIATELY (POWER ON)
Cause: For AC/AC drive units, the measured DC voltage lies outside the tolerance range after pre-charging has been completed.
The following applies for the tolerance range: 1.16 * p0210 < r0070 < 1.6 * p0210
Note:
The fault can only be acknowledged when the drive is powered down.
See also: p0210 (Drive unit line supply voltage)
Remedy: - check the parameterized supply voltage and if required change (p0210).
- check the line supply voltage.
See also: p0210 (Drive unit line supply voltage)
Reaction upon A: NONE
Acknowl. upon A: NONE

F06311 Infeed: Supply voltage (p0210) incorrect

Message value: Line supply voltage: %1
Drive object: B_INF
Reaction: OFF2 (OFF1)
Acknowledge: IMMEDIATELY (POWER ON)
Cause: The line voltage nominal value indicated in p0210 is outside the nominal voltage range of the power unit.

© Siemens AG 2012 All Rights Reserved

After pre-charging was completed, the actual line supply voltage Vrms was calculated using the measured DC link voltage. This voltage Vrms does not lie within the extended tolerance range of the supply voltage set in p0210.
The following applies for the extended tolerance range: 75 % * p0210 < Vrms < 120 % * p0210
Alarm value (r2124, floating point):
Line supply voltage Vrms present.
See also: p0210 (Drive unit line supply voltage)

Remedy: - check the parameterized supply voltage and if required change (p0210).
- check the line supply voltage.
See also: p0210 (Drive unit line supply voltage)

F06700 (A) Infeed: Switch line contactor for load condition

Message value: -
Drive object: B_INF
Reaction: NONE (OFF2)
Acknowledge: IMMEDIATELY
Cause: For an ON command, the infeed line contactor should be switched under load.
Remedy: - do not load the DC link if the infeed has not issued an operating signal (r0863.0 = 1).
- after the infeed has been powered down, all power units connected to the DC link should be powered down. To realize this, the operating signal of the infeed (r0863.0) must be suitably interconnected.
Reaction upon A: NONE
Acknowl. upon A: NONE

A06810 (F) Infeed: DC link voltage alarm threshold

Message value: -
Drive object: B_INF
Reaction: NONE
Acknowledge: NONE
Cause: In operation, the DC link voltage has dropped to below the alarm threshold. The alarm threshold is obtained from the sum of p0279 and r0296.
Possible causes include:
- line supply voltage dip or another line supply fault.
- overload of the infeed.
- for Active Line Module: Controller incorrectly parameterized.
See also: p0279 (DC link voltage offset alarm threshold), r0296 (DC link voltage undervoltage threshold)

Remedy: - check the line voltage and line supply quality.
- reduce the power drawn, avoid step-like load changes
- for Active Line Module: Adapt the controller parameterization (e.g. automatic line supply identification (p3410 = 4, 5)).
Reaction upon F: NONE (OFF1, OFF2)
Acknowl. upon F: IMMEDIATELY (POWER ON)

A06900 (F) Braking Module: Fault (1 -> 0)

Message value: %1
Drive object: B_INF
Reaction: NONE
Acknowledge: NONE
Cause: The Braking Module signals a fault (1 -> 0) via X21.4 ("booksize" format) or X21.5 ("chassis" format).
This signal is wired to a system digital input and correspondingly interconnected using binector input p3866[0...7].
Possible causes:
- Wiring of the signal or BICO interconnection of the signal source incorrect.
- Overtemperature
- Electronics power supply missing.
- Ground fault/short-circuit.
- Internal component fault.
See also: p3866 (Braking Module fault)

© Siemens AG 2012 All Rights Reserved

Remedy: - check binector input p3866[0...7] and the wiring from terminal X21.4 ("booksize" format) or X21.5 ("chassis" format).
- reduce the number of braking operations.
- Check the 24 V power supply of the component.
- Check for a ground fault or short circuit.
- Replace the component if necessary.

Reaction upon F: NONE (OFF2)

Acknowl. upon F: IMMEDIATELY

A06901 Braking Module: Pre-alarm I2t shutdown

Message value: %1

Drive object: B_INF

Reaction: NONE

Acknowledge: NONE

Cause: The Braking Module "Booksize" format signals "Pre-alarm I2t shutdown" via terminal X21.3.
This signal is wired to a system digital input and correspondingly interconnected using binector input p3865[0...7].
Note:
This function is not supported for the "chassis" format.

Remedy: - reduce the number of braking operations.
- check binector input p3865[0...7] and the wiring from terminal X21.3 of the particular Braking Module.

A06904 (N) Braking Module internal is inhibited

Message value: %1

Drive object: B_INF

Reaction: NONE

Acknowledge: NONE

Cause: The internal Braking Module was inhibited via binector input p3680 = 1 signal.
In the inhibited state, energy cannot be dissipated using the braking resistor.
See also: p3680 (Braking Module internal inhibit)

Remedy: Release the internal Braking Module (BI: p3680 = 0 signal).

Reaction upon N: NONE

Acknowl. upon N: NONE

A06905 Braking Module internal I2t shutdown alarm

Message value: %1

Drive object: B_INF

Reaction: NONE

Acknowledge: NONE

Cause: The internal Braking Module outputs an alarm due to the high I2t value.
80% of the maximum switch-on duration of the braking resistor has been reached.
Note:
This message is also displayed via BO: p3685.
See also: r3685 (Digital Braking Module: Pre-alarm I2t shutdown)

Remedy: Reduce the number of braking operations.

F06906 (A) Braking Module internal fault

Message value: %1

Drive object: B_INF

Reaction: NONE

Acknowledge: IMMEDIATELY

Cause: The internal Braking Module outputs a fault due to overcurrent or an excessively high I2t value and is therefore inhibited.
Note:
This message is also displayed via BO: p3686.
Fault value (r0949, interpret bitwise binary):
Bit 0 = 1: I2t exceeded
Bit 1 = 1: overcurrent
See also: r3686 (Digital Braking Module Fault)

© Siemens AG 2012 All Rights Reserved

Remedy: Reduce the number of braking operations.
Reaction upon A: NONE
Acknowl. upon A: NONE

F06907 Braking Module internal overtemperature

Message value: -
Drive object: B_INF
Reaction: OFF2 (NONE, OFF1)
Acknowledge: IMMEDIATELY
Cause: The temperature sensor connected to the braking resistor signals an overtemperature.
The Braking Module is still active. If the overtemperature persists for more than 60 s, fault F06908 is output, and the braking module is switched off.
See also: r3687 (Digital Braking Module pre-alarm overtemperature)
Remedy: - reduce the temperature at the sensor.
- check the temperature sensor connection.

F06908 Braking Module internal overtemperature shutdown

Message value: -
Drive object: B_INF
Reaction: OFF2 (OFF1)
Acknowledge: IMMEDIATELY
Cause: Braking module shut down due to overtemperature at the temperature sensor of the braking resistor.
The overtemperature is detected by the sensor for longer than 60 s.
See also: r3688 (Braking Module internal overtemperature shutdown)
Remedy: - reduce the temperature at the sensor.
- check the temperature sensor connection.

F06909 Braking Module internal Vce fault

Message value: %1
Drive object: B_INF
Reaction: OFF2
Acknowledge: IMMEDIATELY
Cause: The dip in the collector-emitter voltage (Vce) results in a Vce fault and shutdown.
See also: r3689 (Digital Braking Module Uce fault)
Remedy: - carry out a POWER ON (power off/on).
- replace the unit.

A06921 (N) Braking resistor phase unsymmetry

Message value: -
Drive object: VECTOR_G
Reaction: NONE
Acknowledge: NONE
Cause: The three resistors of the braking chopper are not symmetrical.
Remedy: - check the feeder cables to the braking resistors.
- If required, increase the value for detecting dissymmetry (p1364).
See also: p1360 (Braking chopper braking resistor cold), p1362 (Braking chopper activation threshold), r1363 (Braking chopper output voltage), p1364 (Braking chopper resistor asymmetry)
Reaction upon N: NONE
Acknowl. upon N: NONE

F06922 Braking resistor phase failure

Message value: %1
Drive object: VECTOR_G
Reaction: NONE
Acknowledge: IMMEDIATELY
Cause: A phase failure for the brake resistor was detected.

© Siemens AG 2012 All Rights Reserved

Fault value (r0949, interpret decimal):
11: Phase U
12: Phase V
13: Phase W
See also: p3235 (Phase failure signal motor monitoring time)

Remedy: Check the feeder cables to the braking resistors.
See also: p1360 (Braking chopper braking resistor cold), p1362 (Braking chopper activation threshold), r1363 (Braking chopper output voltage), p1364 (Braking chopper resistor asymmetry)

F07011 Drive: Motor overtemperature

Message value: %1
Drive object: VECTOR_G
Reaction: OFF2 (NONE, OFF1, OFF3, STOP1, STOP2)
Acknowledge: IMMEDIATELY
Cause: KTY or no sensor:
The measured motor temperature or model temperature has exceeded the fault threshold (p0605) or the timer (p0606) has elapsed following the alarm threshold (p0604) being exceeded.
The response parameterized in p0610 becomes active.
PTC or bimetallic NC contact:
The response threshold of 1650 Ohm was exceeded or the NC contact opened and the timer (p0606) has expired.
The response parameterized in p0610 becomes active.
Possible causes:
- Motor is overloaded
- motor ambient temperature too high.
- PTC / bimetallic NC contact: Wire breakage or sensor not connected.
Fault value (r0949, interpret decimal):
200: The motor temperature model 1 (I2t) signals an overtemperature (p0612.0 = 1, p0611 > 0).
Number of the temperature channel leading to the message (for SME/TM120 (p0601 = 10, 11)).
See also: p0604, p0605, p0606, p0612, p0625, p0626, p0627, p0628

Remedy:
- Reduce the motor load.
- check the ambient temperature and the motor ventilation.
- check the wiring and the connection of the PTC or bimetallic NC contact.
See also: p0604, p0605, p0606, p0612, p0625, p0626, p0627, p0628

A07012 (N) Drive: Motor temperature model 1/3 overtemperature

Message value: %1
Drive object: VECTOR_G
Reaction: NONE
Acknowledge: NONE
Cause: The thermal I2t motor model for synchronous motors identified that the alarm threshold was exceeded.
See also: r0034 (Motor utilization), p0605 (Mot_temp_mod 1/2 threshold), p0611 (I2t motor model thermal time constant), p0612 (Mot_temp_mod activation)

Remedy:
- check the motor load and if required, reduce.
- check the motor ambient temperature.
- check the thermal time constant (p0611).
- check the overtemperature fault threshold (p0605), (= alarm threshold for the I2t motor model).
See also: r0034 (Motor utilization), p0605 (Mot_temp_mod 1/2 threshold), p0611 (I2t motor model thermal time constant), p0612 (Mot_temp_mod activation)

Reaction upon N: NONE
Acknowl. upon N: NONE

A07015 Drive: Motor temperature sensor alarm

Message value: %1
Drive object: VECTOR_G
Reaction: NONE
Acknowledge: NONE
Cause: An error was detected when evaluating the temperature sensor set in p0600 and p0601.
With the fault, the time in p0607 is started. If the fault is still present after this time has expired, then fault F07016 is output; however, at the earliest, 50 ms after alarm A07015.

© Siemens AG 2012 All Rights Reserved

Possible causes:
- wire breakage or sensor not connected (KTY: R > 1630 Ohm).
- measured resistance too low (PTC: R < 20 Ohm, KTY: R < 50 Ohm).
Alarm value (r2124, interpret decimal):
- if SME/TM120 is selected (p0601 = 10, 11),
this is the number of the temperature channel leading to the message.

Remedy: - make sure that the sensor is connected correctly.
- check the parameterization (p0600, p0601).
See also: r0035, p0600 (Motor temperature sensor for monitoring), p0601, p0607 (Temperature sensor fault timer)

F07016 Drive: Motor temperature sensor fault

Message value: %1

Drive object: VECTOR_G

Reaction: OFF1 (NONE, OFF2, OFF3, STOP1, STOP2)

Acknowledge: IMMEDIATELY

Cause: An error was detected when evaluating the temperature sensor set in p0600 and p0601.
Possible causes:
- wire breakage or sensor not connected (KTY: R > 1630 Ohm).
- measured resistance too low (PTC: R < 20 Ohm, KTY: R < 50 Ohm).
Note:
If alarm A07015 is present, the time in p0607 is started. If the fault is still present after this time has expired, then fault F07016 is output; however, at the earliest, 50 ms after alarm A07015.
Fault value (r0949, interpret decimal):
- if SME/TM120 is selected (p0601 = 10, 11),
this is the number of the temperature channel leading to the message.
See also: p0607 (Temperature sensor fault timer)

Remedy: - make sure that the sensor is connected correctly.
- check the parameterization (p0600, p0601).
- induction motors: De-activate temperature sensor fault (p0607 = 0).
See also: r0035, p0600 (Motor temperature sensor for monitoring), p0601, p0607 (Temperature sensor fault timer)

F07080 Drive: Incorrect control parameter

Message value: Parameter: %1

Drive object: B_INF, ENC, HUB, TB30, TM150, TM31, TM54F_MA, TM54F_SL, VECTOR_G

Reaction: NONE

Acknowledge: IMMEDIATELY (POWER ON)

Cause: The closed-loop control parameters have been parameterized incorrectly (e.g. p0356 = L_spread = 0).
Fault value (r0949, interpret decimal):
The fault value includes the parameter number involved.
The following parameter numbers only occur as fault values for vector drives:
p0310, for synchronous motors: p0341, p0344, p0350, p0357
The following parameter numbers do not occur as fault values for synchronous motors:
p0354, p0358, p0360
See also: p0310, p0311, p0341, p0344, p0350, p0354, p0356, p0357, p0358, p0360, p0400, p0404, p0408, p0640, p1082, p1300

Remedy: Modify the parameter indicated in the fault value (r0949) (e.g. p0640 = current limit > 0).
See also: p0311, p0341, p0344, p0350, p0354, p0356, p0358, p0360, p0400, p0404, p0408, p0640, p1082

F07082 Macro: Execution not possible

Message value: Fault cause: %1, supplementary information: %2, preliminary parameter number: %3

Drive object: All objects

Reaction: NONE

Acknowledge: IMMEDIATELY

Cause: The macro cannot be executed.
Fault value (r0949, interpret hexadecimal):
ccccbbaa hex:
cccc = preliminary parameter number, bb = supplementary information, aa = fault cause

© Siemens AG 2012 All Rights Reserved

Fault causes for the trigger parameter itself:
19: Called file is not valid for the trigger parameter.
20: Called file is not valid for parameter 15.
21: Called file is not valid for parameter 700.
22: Called file is not valid for parameter 1000.
23: Called file is not valid for parameter 1500.
24: Data type of a TAG is incorrect (e.g. Index, number or bit is not U16).
Fault causes for the parameters to be set:
25: Error level has an undefined value.
26: Mode has an undefined value.
27: A value was entered as string in the tag value that is not "DEFAULT".
31: Entered drive object type unknown.
32: A device was not able to be found for the determined drive object number.
34: A trigger parameter was recursively called.
35: It is not permissible to write to the parameter via macro.
36: Check, writing to a parameter unsuccessful, parameter can only be read, not available, incorrect data type, value range or assignment incorrect.
37: Source parameter for a BICO interconnection was not able to be determined.
38: An index was set for a non-indexed (or CDS-dependent) parameter.
39: No index was set for an indexed parameter.
41: A bit operation is only permissible for parameters with the parameter format DISPLAY_BIN.
42: A value not equal to 0 or 1 was set for a BitOperation.
43: Reading the parameter to be changed by the BitOperation was unsuccessful.
51: Factory setting for DEVICE may only be executed on the DEVICE.
61: The setting of a value was unsuccessful.

Remedy: - check the parameter involved.
- check the macro file and BICO interconnection.
See also: p0015, p0700, p1000 (Macro Connector Inputs (CI) for speed setpoints), p1500 (Macro Connector Inputs (CI) for torque setpoints)

F07083 Macro: ACX file not found

Message value: Parameter: %1

Drive object: All objects

Reaction: NONE

Acknowledge: IMMEDIATELY

Cause: The ACX file (macro) to be executed was not able to be found in the appropriate directory.
Fault value (r0949, interpret decimal):
Parameter number with which the execution was started.
See also: p0015, p0700, p1000 (Macro Connector Inputs (CI) for speed setpoints), p1500 (Macro Connector Inputs (CI) for torque setpoints)

Remedy: - check whether the file is saved in the appropriate directory on the memory card.
Example:
If p0015 is set to 1501, then the selected ACX file must be located in the following directory:
... /PMACROS/DEVICE/P15/PM001501.ACX

F07084 Macro: Condition for WaitUntil not fulfilled

Message value: Parameter: %1

Drive object: All objects

Reaction: NONE

Acknowledge: IMMEDIATELY

Cause: The WaitUntil condition set in the macro was not fulfilled in a certain number of attempts.
Fault value (r0949, interpret decimal):
Parameter number for which the condition was set.

Remedy: Check and correct the conditions for the WaitUntil loop.

© Siemens AG 2012 All Rights Reserved

F07085 Drive: Open-loop/closed-loop control parameters changed

Message value: Parameter: %1

Drive object: B_INF, VECTOR_G

Reaction: NONE

Acknowledge: IMMEDIATELY (POWER ON)

Cause: Open-loop/closed-loop control parameters have had to be changed for the following reasons:
1. As a result of other parameters, they have exceeded the dynamic limits.
2. They cannot be used due to the fact that the hardware detected not having certain features.
Fault value (r0949, interpret decimal):
Changed parameter number.
340:
The motor and control parameters were automatically calculated (p0340 = 1), because the vector control was subsequently activated as configuration (r0108.2).
See also: p0640 (Current limit), p1082 (Maximum speed), p1300 (Open-loop/closed-loop control operating mode), p1800 (Pulse frequency setpoint)

Remedy: Not necessary.
It is not necessary to change the parameters as they have already been correctly limited.

F07086 Units changeover: Parameter limit violation due to reference value change

Message value: Parameter: %1

Drive object: B_INF, ENC, VECTOR_G

Reaction: NONE

Acknowledge: IMMEDIATELY

Cause: A reference parameter was changed in the system. This resulted in the fact that for the parameters involved, the selected value was not able to be written in the per unit notation.
The values of the parameters were set to the corresponding violated minimum limit/maximum limit or to the factory setting.
Possible causes:
- the steady-state minimum limit/maximum limit or that defined in the application was violated.
Fault value (r0949, parameter):
Diagnostics parameter to display the parameters that were not able to be re-calculated.
See also: p0304, p0305, p0310, p0596, p2000, p2001, p2002, p2003, r2004

Remedy: Check the adapted parameter value and if required correct.
See also: r9450 (Reference value change parameter with unsuccessful calculation)

F07088 Units changeover: Parameter limit violation due to units changeover

Message value: Parameter: %1

Drive object: B_INF, ENC, VECTOR_G

Reaction: NONE

Acknowledge: IMMEDIATELY

Cause: A changeover of units was initiated. This resulted in a violation of a parameter limit
Possible causes for the violation of a parameter limit:
- When rounding off a parameter corresponding to its decimal places, the steady-state minimum limit or maximum limit was violated.
- inaccuracies for the data type "FloatingPoint".
In these cases, when the minimum limit is violated then the parameter value is rounded up and when the maximum limited is violated the parameter value is rounded down.
Fault value (r0949, interpret decimal):
Diagnostics parameter r9451 to display all parameters whose value had to be adapted.
See also: p0100 (IEC/NEMA mot stds), p0349 (System of units, motor equivalent circuit diagram data), p0505 (Selecting the system of units), p0595 (Technological unit selection)

Remedy: Check the adapted parameter values and if required correct.
See also: r9451 (Units changeover adapted parameters)

© Siemens AG 2012 All Rights Reserved

A07089 Changing over units: Function module activation is blocked because the units have been changed over

Message value: -
Drive object: All objects
Reaction: NONE
Acknowledge: NONE
Cause: An attempt was made to activate a function module. This is not permissible if the units have already been changed over.
See also: p0100 (IEC/NEMA mot stds), p0349 (System of units, motor equivalent circuit diagram data), p0505 (Selecting the system of units)
Remedy: Restore units that have been changed over to the factory setting.

F07100 Drive: Sampling times cannot be reset

Message value: Parameter: %1
Drive object: B_INF, VECTOR_G
Reaction: NONE
Acknowledge: IMMEDIATELY
Cause: When resetting drive parameter (p0976) sampling times cannot be reset using p0111, p0112, p0115.
Fault value (r0949, interpret decimal):
Parameter whose setting prevents the sampling times being reset.
See also: r0110 (Basic sampling times)
Remedy: - continue to work with the set sampling times.
- before resetting the drive parameters, set the basic clock cycle p0110[0] to the original value.
See also: r0110 (Basic sampling times)

F07110 Drive: Sampling times and basic clock cycle do not match

Message value: Parameter: %1
Drive object: All objects
Reaction: NONE
Acknowledge: IMMEDIATELY
Cause: The parameterized sampling times do not match the basic clock cycle.
Fault value (r0949, interpret decimal):
The fault value specifies the parameter involved.
See also: r0110, r0111, p0115
Remedy: Enter the current controller sampling times so that they are identical to the basic clock cycle, e.g. by selecting p0112.
Note which basic clock cycle is selected in p0111.
The sampling times in p0115 can only be changed manually in the sampling times pre-setting "Expert" (p0112).
See also: r0110, r0111, p0112, p0115

A07200 Drive: Master control ON command present

Message value: -
Drive object: B_INF, ENC, VECTOR_G
Reaction: NONE
Acknowledge: NONE
Cause: The ON/OFF1 command is present (no 0 signal).
The command is either influenced via binector input p0840 (current CDS) or control word bit 0 via the master control.
Remedy: Switch the signal via binector input p0840 (current CDS) or control word bit 0 via the master control to 0.

F07220 (N, A) Drive: Master control by PLC missing

Message value: -
Drive object: B_INF, ENC, VECTOR_G
Reaction: Infeed: OFF1 (NONE, OFF2)
Vector: OFF1 (NONE, OFF2, OFF3, STOP1, STOP2)
Acknowledge: IMMEDIATELY
Cause: The "master control by PLC" signal was missing in operation.
- interconnection of the binector input for "master control by PLC" is incorrect (p0854).

© Siemens AG 2012 All Rights Reserved

- the higher-level control has withdrawn the "master control by PLC" signal.
- data transfer via the fieldbus (master/drive) was interrupted.

Remedy:
- check the interconnection of the binector input for "master control by PLC" (p0854).
- check the "master control by PLC" signal and, if required, switch in.
- check the data transfer via the fieldbus (master/drive).

Note:
If the drive should continue to operate after withdrawing "master control by PLC" then fault response must be parameterized to NONE or the message type should be parameterized as alarm.

Reaction upon N: NONE
Acknowl. upon N: NONE
Reaction upon A: NONE
Acknowl. upon A: NONE

F07300 (A) Drive: Line contactor feedback signal missing

Message value: -
Drive object: B_INF, VECTOR_G
Reaction: OFF2 (NONE)
Acknowledge: IMMEDIATELY
Cause:
- the line contactor was not able to be closed within the time in p0861.
- the line contactor was not able to be opened within the time in p0861.
- the line contactor dropped out during operation
- the line contactor has closed although the drive converter is powered down.

Remedy:
- check the setting of p0860.
- check the feedback circuit from the line contactor.
- increase the monitoring time in p0861.

See also: p0860 (Line cont. fdbk sig), p0861 (Line contactor monitoring time)

Reaction upon A: NONE
Acknowl. upon A: NONE

F07311 Bypass motor switch

Message value: Fault cause: %1 bin
Drive object: VECTOR_G
Reaction: OFF2
Acknowledge: IMMEDIATELY
Cause:
Fault value (r0949, interpret bitwise binary):
Bit 1: Switch "Closed" feedback signal missing.
Bit 2: Switch "Open" feedback signal missing.
Bit 3: Switch feedback signal too slow.
After switching, the system waits for the positive feedback signal. If the feedback signal is received later than the specified time, then a fault trip (shutdown) is issued.
Bit 6: Drive switch feedback signal not consistent with the bypass state.
The drive switch is closed when switching-on or when switching-in the motor.
See also: p1260 (Bypass configuration), r1261 (Bypass control/status word), p1266 (Bypass, control command), p1267 (Bypass changeover source configuration), p1269 (Bypass switch feedback signal), p1274 (Bypass switch monitoring time)

Remedy:
- check the transfer of the feedback signals.
- check the switch.

F07312 Bypass LSS:

Message value: Fault cause: %1 bin
Drive object: VECTOR_G
Reaction: OFF2
Acknowledge: IMMEDIATELY
Cause:
Fault value (r0949, interpret bitwise binary):
Bit 1: Switch "Closed" feedback signal missing.
Bit 2: Switch "Open" feedback signal missing.

© Siemens AG 2012 All Rights Reserved

Bit 3: Switch feedback signal too slow.
After switching, the system waits for the positive feedback signal. If the feedback signal is received later than the specified time, then a fault trip (shutdown) is issued.
Bit 6: Line Side Switch feedback signal not consistent with the bypass state.
When switching-on or when switching-in the motor, the line side switch is closed without this having been requested from the bypass.
See also: p1260 (Bypass configuration), r1261 (Bypass control/status word), p1266 (Bypass, control command), p1267 (Bypass changeover source configuration), p1269 (Bypass switch feedback signal), p1274 (Bypass switch monitoring time)

Remedy: - check the transfer of the feedback signals.
- check the switch.

F07320 Drive: Automatic restart interrupted

Message value: %1
Drive object: B_INF
Reaction: OFF2
Acknowledge: IMMEDIATELY
Cause: - The specified number of restart attempts (p1211) has been completely used up because within the monitoring time (p1213) the faults were not able to be acknowledged. The number of restart attempts (p1211) is decremented at each new start attempt.
- there is no active ON command.
- the monitoring time for the power unit has expired (p0857).
- when exiting commissioning or at the end of the motor identification routine or the speed controller optimization, the drive unit is not automatically powered up again.
Fault value (r0949, interpret hexadecimal):
Only for internal Siemens troubleshooting.

Remedy: - increase the number of restart attempts (p1211). The actual number of starting attempts is displayed in r1214.
- increase the delay time in p1212 and/or the monitoring time in p1213.
- issue an ON command (p0840).
- either increase or disable the monitoring time of the power unit (p0857).

F07320 Drive: Automatic restart interrupted

Message value: %1
Drive object: VECTOR_G
Reaction: OFF2
Acknowledge: IMMEDIATELY
Cause: - The specified number of restart attempts (p1211) has been completely used up because within the monitoring time (p1213) the faults were not able to be acknowledged. The number of restart attempts (p1211) is decremented at each new start attempt.
- there is no active ON command.
- the monitoring time for the power unit has expired (p0857).
- when exiting commissioning or at the end of the motor identification routine or the speed controller optimization, the drive unit is not automatically powered up again.
Fault value (r0949, interpret hexadecimal):
Only for internal Siemens troubleshooting.

Remedy: - increase the number of restart attempts (p1211). The actual number of starting attempts is displayed in r1214.
- increase the delay time in p1212 and/or the monitoring time in p1213.
- issue an ON command (p0840).
- either increase or disable the monitoring time of the power unit (p0857).
- Reduce the delay time for resetting the start counter p1213[1] so that fewer faults are registered in the time interval.

A07321 Drive: Automatic restart active

Message value: -
Drive object: B_INF, VECTOR_G
Reaction: NONE
Acknowledge: NONE
Cause: The automatic restart (AR) is active. When the line supply returns and/or the causes of the existing faults are removed the drive is automatically restarted. The pulses are enabled and the motor starts to rotate.

© Siemens AG 2012 All Rights Reserved

Remedy: - the automatic restart (AR) should, if required, be inhibited (p1210 = 0).
- an automatic restart can be directly interrupted by withdrawing the power-on command (BI: p0840).

F07330 Flying restart: Measured search current too low

Message value: -
Drive object: VECTOR_G
Reaction: OFF2 (NONE, OFF1)
Acknowledge: IMMEDIATELY
Cause: During a flying restart, it was identified that the search current reached is too low.
It is possible that the motor is not connected.
Remedy: Check the motor feeder cables.

F07331 Flying restart: Function not supported

Message value: -
Drive object: VECTOR_G
Reaction: OFF2 (NONE, OFF1)
Acknowledge: IMMEDIATELY
Cause: It is not possible to power up with the motor rotating (no flying restart). In the following cases, the "flying restart" function is not supported:
Permanent-magnet and separately-excited synchronous motors (PEM, FEM): Operation with U/f characteristic.
Permanent-magnet synchronous motor (PEM): Encoderless operation without a Voltage Sensing Module (VSM) being connected.
Remedy: - de-activate the "flying restart" function (p1200 = 0).
- change the open-loop/closed-loop control mode (p1300).
- connect a Voltage Sensing Module (VSM) (voltage measurement).

A07350 (F) Drive: Measuring probe parameterized to a digital output

Message value: %1
Drive object: All objects
Reaction: NONE
Acknowledge: NONE
Cause: The measuring probe is connected to a bi-directional digital input/output and the terminal is set as output.
Alarm value (r2124, interpret decimal):
8: DI/DO 8 (X122.9/X132.1)
9: DI/DO 9 (X122.10/X132.2)
10: DI/DO 10 (X122.12/X132.3)
11: DI/DO 11 (X122.13/X132.4)
12: DI/DO 12 (X132.9)
13: DI/DO 13 (X132.10)
14: DI/DO 14 (X132.12)
15: DI/DO 15 (X132.13)
To the terminal designation:
The first designation is valid for CU320, the second for CU305.
Remedy: - set the terminal as input (p0728).
- de-select the measuring probe (p0488, p0489, p0580).
Reaction upon F: OFF1
Acknowl. upon F: IMMEDIATELY

A07400 (N) Drive: DC link voltage maximum controller active

Message value: -
Drive object: VECTOR_G
Reaction: NONE
Acknowledge: NONE
Cause: The DC link voltage controller has been activated because the upper switch-in threshold has been exceeded (r1242, r1282).
The ramp-down times are automatically increased in order to maintain the DC link voltage (r0070) within the permissible limits. There is a system deviation between the setpoint and actual speeds.

© Siemens AG 2012 All Rights Reserved

When the DC link voltage controller is switched out (disabled), this is the reason that the ramp-function generator output is set to the speed actual value.
See also: r0056 (Status word, closed-loop control), p1240 (Vdc controller or Vdc monitoring configuration), p1280 (Vdc controller or Vdc monitoring configuration (U/f))

Remedy: If the controller is not to intervene:
- increase the ramp-down times.
- switch-off the Vdc_max controller (p1240 = 0 for vector control, p1280 = 0 for U/f control).
If the ramp-down times are not to be changed:
- use a chopper or regenerative feedback unit.

Reaction upon N: NONE
Acknowl. upon N: NONE

A07401 (N) Drive: DC link voltage maximum controller de-activated

Message value: -
Drive object: VECTOR_G
Reaction: NONE
Acknowledge: NONE
Cause: The Vdc_max controller can no longer maintain the DC link voltage (r0070) below the limit value (r1242, r1282) and was therefore switched out (disabled).
- the line supply voltage is permanently higher than specified for the power unit.
- the motor is permanently in the regenerative mode as a result of a load that is driving the motor.

Remedy: - check whether the input voltage is within the permissible range.
- check whether the load duty cycle and load limits are within the permissible limits.

Reaction upon N: NONE
Acknowl. upon N: NONE

A07402 (N) Drive: DC link voltage minimum controller active

Message value: -
Drive object: VECTOR_G
Reaction: NONE
Acknowledge: NONE
Cause: The DC link voltage controller has been activated as the lower switch-in threshold has been undershot (r1246, r1286).
The kinetic energy of the motor is used to buffer the DC link. The drive is therefore braked.
See also: r0056 (Status word, closed-loop control), p1240 (Vdc controller or Vdc monitoring configuration), p1280 (Vdc controller or Vdc monitoring configuration (U/f))

Remedy: The alarm disappears when power supply returns.

Reaction upon N: NONE
Acknowl. upon N: NONE

F07403 (N, A) Drive: Lower DC link voltage threshold reached

Message value: -
Drive object: VECTOR_G
Reaction: OFF1 (NONE, OFF2, OFF3)
Acknowledge: IMMEDIATELY
Cause: The DC link voltage monitoring is active (p1240 , p1280 = 5, 6) and the lower DC link voltage threshold (r1246, r1286) was reached in the "Operation" state.

Remedy: - check the line supply voltage.
- check the infeed.
- adapt the device supply voltage (p0210) or the switch-on level (p1245, p1285).
- disable the DC link voltage monitoring (p1240, p1280 = 0).

Reaction upon N: NONE
Acknowl. upon N: NONE
Reaction upon A: NONE
Acknowl. upon A: NONE

© Siemens AG 2012 All Rights Reserved

F07404 Drive: Upper DC link voltage threshold reached

Message value: -
Drive object: VECTOR_G
Reaction: OFF2 (NONE, OFF1, OFF3)
Acknowledge: IMMEDIATELY
Cause: The DC link voltage monitoring is active (p1240 , p1280 = 4, 6) and the upper DC link voltage threshold (r1242, r1282) was reached in the "Operation" state.
Remedy: - check the line supply voltage.
- check the infeed module
- adapt the device supply voltage (p0210).
- disable the DC link voltage monitoring (p1240, p1280 = 0).

F07405 (N, A) Drive: Kinetic buffering minimum speed not reached

Message value: -
Drive object: VECTOR_G
Reaction: OFF2 (IASC/DCBRAKE, NONE, OFF1, OFF3, STOP1, STOP2)
Acknowledge: IMMEDIATELY
Cause: During kinetic buffering the speed fell below minimum speed (p1257 or p1297 for vector drives with U/f control) and the line supply did not return.
Remedy: Check the speed threshold for the Vdc_min controller (kinetic buffering) (p1257, p1297).
See also: p1257 (Vdc_min controller speed threshold), p1297 (Vdc_min controller speed threshold (U/f))
Reaction upon N: NONE
Acknowl. upon N: NONE
Reaction upon A: NONE
Acknowl. upon A: NONE

F07406 (N, A) Drive: Kinetic buffering maximum time exceeded

Message value: -
Drive object: VECTOR_G
Reaction: OFF3 (IASC/DCBRAKE, NONE, OFF1, OFF2, STOP1, STOP2)
Acknowledge: IMMEDIATELY
Cause: The maximum buffer time (p1255 and p1295 for vector drives with U/f control) has been exceeded without the line supply having returned.
Remedy: Check the time threshold for Vdc-min controller (kinetic buffering) (p1255, p1295).
See also: p1255 (Vdc_min controller time threshold), p1295 (Vdc_min controller time threshold (U/f))
Reaction upon N: NONE
Acknowl. upon N: NONE
Reaction upon A: NONE
Acknowl. upon A: NONE

F07407 Drive: Vdc reduction not permissible

Message value: -
Drive object: VECTOR_G
Reaction: OFF2
Acknowledge: IMMEDIATELY
Cause: For chassis power units, the reduction of the line voltage (see r0212.0) is only possible for closed-loop control of the DC link voltage.
Remedy: - Activate DC link voltage control for the motor/generator.
- de-activate line voltage reduction (p0212.0 = 0).
See also: p0212 (Power unit configuration)

© Siemens AG 2012 All Rights Reserved

A07409 Drive: U/f control, current limiting controller active

Message value: %1
Drive object: VECTOR_G
Reaction: NONE
Acknowledge: NONE
Cause: The current limiting controller of the U/f control was activated because the current limit was exceeded.
Remedy: The alarm automatically disappears after one of the following measures:
- increase current limit (p0640).
- reduce the load.
- slow down the ramp up to the setpoint speed.

F07410 Drive: Current controller output limited

Message value: -
Drive object: VECTOR_G
Reaction: OFF2 (NONE, OFF1)
Acknowledge: IMMEDIATELY
Cause: The condition "I_act = 0 and Uq_set_1 longer than 16 ms at its limit" is present and can be caused by the following:
- motor not connected or motor contactor open.
- motor data and motor configuration (star-delta) do not match.
- no DC link voltage present.
- power unit defective.
- the "flying restart" function is not activated.

Remedy:
- connect the motor or check the motor contactor.
- check the motor parameterization and the connection type (star-delta).
- check the DC link voltage (r0070).
- check the power unit.
- activate the "flying restart" function (p1200).

F07412 Drive: Commutation angle incorrect (motor model)

Message value: %1
Drive object: VECTOR_G
Reaction: ENCODER (NONE, OFF2)
Acknowledge: IMMEDIATELY
Cause: An incorrect commutation angle was detected that can result in a positive coupling in the speed controller.
Possible causes:
- The phase sequence of the output phases for the motor is incorrect (e.g. the phases are interchanged).
- the motor encoder is incorrectly adjusted with respect to the magnet position.
- the motor encoder is damaged.
- the angular commutation offset is incorrectly set (p0431).
- data to calculate the motor model has been incorrectly set (p0356 (motor-stator leakage inductance) and/or p0350 (motor-stator resistance) and/or p0352 (cable resistance).
- the changeover speed for the motor model is too low (p1752). The monitoring function only becomes effective above the changeover speed.
- pole position identification might have calculated an incorrect value when activated (p1982 = 1).
- the motor encoder speed signal is faulted.
- the control loop is instable due to incorrect parameterization.

Fault value (r0949, interpret decimal):
SERVO:
0: The comparison of the pole position angle from the encoder and motor model resulted in an excessively high value (> 80 ° electrical).
1: -
VECTOR:
0: The comparison of the pole position angle from the encoder and motor model resulted in an excessively high value (> 45 ° electrical).
1: The change in the speed signal from the motor encoder has changed by > p0492 within a current controller clock cycle.

Remedy:
- Check the phase sequence for the motor, and if required, correct (wiring, p1820).
- if the encoder mounting was changed - re-adjust the encoder.
- replace the defective motor encoder.

© Siemens AG 2012 All Rights Reserved

- correctly set the angular commutation offset (p0431). If required, determine using p1990.
- correctly set the motor stator resistance, cable resistance and motor-stator leakage inductance (p0350, p0352, p0356).
Calculate the cable resistance from the cross-section and length, check the inductance and stator resistance using the motor data sheet, measure the stator resistance, e.g. using a multimeter - and if required, again identify the values using the stationary motor data identification (p1910).
- increase the changeover speed for the motor model (p1752). The monitoring is completely de-activated for p1752 > p1082 (maximum speed).
- with pole position identification activated (p1982 = 1) check the procedure for pole position identification (p1980) and force a new pole position identification procedure by means of de-selection followed by selection (p1982 = 0 -> 1).
Note:
For High Dynamic Motors (1FK7xxx-7xxx), for applications with a higher current, if necessary, the monitoring should be disabled.

F07413 Drive: Commutation angle incorrect (pole position identification)

Message value: -

Drive object: VECTOR_G

Reaction: ENCODER (NONE, OFF2)

Acknowledge: IMMEDIATELY

Cause: An incorrect commutation angle was detected that can result in a positive coupling in the speed controller.
Within the pole position identification routine (p1982 = 2):
- a difference of > 45 ° electrical to the encoder angle was determined.
For VECTOR, within the encoder adjustment (p1990 = 2):
- a difference of > 6 ° electrical to the encoder angle was determined.

Remedy: - correctly set the angular commutation offset (p0431).
- re-adjust the motor encoder after the encoder has been replaced.
- replace the defective motor encoder.
- check the pole position identification routine. If the pole position identification routine is not suitable for this motor type, then disable the plausibility check (p1982 = 0).

A07416 Drive: Flux controller configuration

Message value: Parameter: %1, Index: %2, fault cause: %3

Drive object: VECTOR_G

Reaction: NONE

Acknowledge: NONE

Cause: The configuration of the flux control (p1401) is contradictory.
Alarm value (r2124, interpret hexadecimal):
ccbbaaaa hex
aaaa = Parameter
bb = Index
cc = fault cause
cc = 01 hex = 1 dec:
Quick magnetizing (p1401.6) for soft start (p1401.0).
cc = 02 hex = 2 dec:
Quick magnetizing (p1401.6) for flux build-up control (p1401.2).
cc = 03 hex = 3 dec:
Quick magnetizing (p1401.6) for Rs identification after restart (p0621 = 2).

Remedy: Re fault cause = 1:
- Shut down soft start (p1401.0 = 0).
- Shut down quick magnetizing (p1401.6 = 0).
Re fault cause = 2:
- De-energize flux build-up control (p1401.2 = 0).
- Shut down quick magnetizing (p1401.6 = 0).
Re fault cause = 3:
- Re-parameterize Rs identification (p0621 = 0, 1)
- Shut down quick magnetizing (p1401.6 = 0).

© Siemens AG 2012 All Rights Reserved

F07417 Drive: Pulse technique not plausible (motor model)

Message value: %1

Drive object: VECTOR_G

Reaction: OFF2 (NONE)

Acknowledge: IMMEDIATELY

Cause: The evaluation of the test pulse response indicated incorrect values.
Fault value (r0949, interpret decimal):
0:
An impermissible pulse technique configuration was detected during ramp-up.
Possible causes:
- The pulse technique was initially selected when the system powered up (p1750.5 = 1) but the power unit component does not support the current oversampling required (see r0192.23). As a consequence, p1750.0 was de-selected automatically.
10:
The pulse response is repeatedly implausible.
Possible causes:
- Incorrect configuration of the power unit component
- The power unit component is faulty.
20:
For the specified pulse amplitude, the measured pulse response is much higher than the expected value.
Possible causes:
- Strong oscillations have occurred.
- The motor is short-circuited for high frequencies (output filter).
- The motor is damaged.

Remedy: For fault value = 0:
Once the pulse technique has been de-selected automatically (p1750.5=0), there are two possible options:
- acknowledge the fault and save parameter p1750.5 = 0 -> field-oriented control mode to standstill is not used and replaced by transition to open-loop control at low speeds.
- upgrade the power unit firmware (at least V04.30) -> field-oriented control mode to standstill is available.
For fault value = 10:
With active selection of the pulse technique (p1750.5 = 1):
- POWER ON (switch-off/switch-on) the Control Unit and the power unit together again.
or
- carry out a manual warm restart (p0009 = 30, p0976 = 2, 3).
If this does not solve the problem: Replace the power unit component.
For fault value = 20:
- control parameters might have been adjusted (factory setting, commissioning).
- filters must not be connected between motor and converter/inverter.
- check the motor.

F07422 Drive: Reference model natural frequency > Shannon frequency

Message value: -

Drive object: VECTOR_G

Reaction: NONE (OFF1, OFF2, OFF3)

Acknowledge: IMMEDIATELY (POWER ON)

Cause: The natural filter frequency of the PT2 element for the reference model (p1433) is greater than the Shannon frequency.
The Shannon frequency is calculated according to the following formula: 0.5 / p0115[1]

Remedy: - reduce the natural frequency of PT2 element for reference model (p1433).
- reduce the speed controller sampling time (p0115[1]).

F07426 (A) Technology controller actual value limited

Message value: %1

Drive object: VECTOR_G

Reaction: OFF1 (IASC/DCBRAKE, NONE, OFF2, OFF3)

Acknowledge: IMMEDIATELY

Cause: The actual value for the technology controller, interconnected via connector input p2264, has reached a limit.

© Siemens AG 2012 All Rights Reserved

Fault value (r0949, interpret decimal):
1: upper limit reached.
2: lower limit reached.

Remedy: - adapt the limits to the signal level (p2267, p2268).
- Check the actual value normalization (p0595, p0596).
- Deactivate evaluation of the limits (p2252 bit 3)
See also: p0595 (Technological unit selection), p0596 (Technological unit reference quantity), p2264 (Technology controller actual value), p2267 (Technology controller upper limit actual value), p2268 (Technology controller lower limit actual value)

Reaction upon A: NONE

Acknowl. upon A: NONE

A07428 (N) Technology controller parameterizing error

Message value: %1

Drive object: VECTOR_G

Reaction: NONE

Acknowledge: NONE

Cause: The technology controller has a parameterizing error.
Alarm value (r2124, interpret decimal):
1: The parameter value for the upper output limit of the technology controller p2291 is less than the parameter value of the lower output limit p2292.

Remedy: 1: Set p2291 to a higher value than p2292.
See also: p2291 (Technology controller maximum limiting), p2292 (Technology controller minimum limiting)

Reaction upon N: NONE

Acknowl. upon N: NONE

F07434 Drive: It is not possible to change the direction of rotation with the pulses enabled

Message value: -

Drive object: VECTOR_G

Reaction: OFF2

Acknowledge: IMMEDIATELY

Cause: A drive data set was selected - with the pulses enabled - which has a different parameterized direction of rotation (p1821).
It is only possible to change the motor direction of rotation using p1821 when the pulses are inhibited.

Remedy: - change over the drive data set with the pulses inhibited.
- ensure that the changeover to a drive data set does not result in the motor direction of rotation being changed (i.e. for these drive data sets, the same value must be in p1821).
See also: p1821 (Dir of rot)

F07435 (N) Drive: Setting the ramp-function generator for sensorless vector control

Message value: Parameter: %1

Drive object: VECTOR_G

Reaction: OFF2 (IASC/DCBRAKE, NONE, OFF1, OFF3)

Acknowledge: IMMEDIATELY

Cause: During operation with sensorless vector control (r1407.1) the ramp-function generator was stopped (p1141) or bypassed (p1122). An internal setting command of the ramp-function generator output caused the set setpoint speed to be frozen or was not able to be realized.

Remedy: - de-activate the holding command for the ramp-function generator (p1141).
- do not bypass the ramp-function generator (p1122).
- suppress the fault (p2101, p2119). This is necessary if the ramp-function generator is held using jogging and the speed setpoint is simultaneously inhibited (r0898.6).
Note:
For sensorless vector control it is not practical to read in the main setpoint of the speed control via p1155 or p1160 (p0922). In this case, the main setpoint should be injected before the ramp-function generator (p1070). The reason for this is that the ramp-function generator output is automatically set when transitioning from closed-loop speed controlled into open-loop speed controlled operation.

Reaction upon N: NONE

Acknowl. upon N: NONE

© Siemens AG 2012 All Rights Reserved

F07439 Drive: Higher current controller dynamic performance not possible

Message value: %1

Drive object: VECTOR_G

Reaction: OFF2 (NONE)

Acknowledge: IMMEDIATELY

Cause: The function "Current controller dynamics higher" (p1810.11 = 1) is selected, however is not supported by the power unit (r0192.27 = 0) or by the safety technology without encoder (9506 = 1, 3).
Fault value (r0949, interpret decimal):
1:
- firmware of the booksize power unit is not up-to-date.
- blocksize or S120 combi power unit was used.
2:
- Encoderless safety technology is used.

Remedy: In general:
- Deselect the function "Current controller dynamics higher" (p1810.11 = 0) and if required, set the current, speed and position controller again or calculate (p0340 = 4).
For fault value = 1:
- If necessary, upgrade the firmware of the booksize power unit to a later version (version >= 4.4).
Note:
If the firmware has already been automatically upgraded, then only a POWER ON (switch-off/switch-on) is required.
- Use a booksize power unit (version >= 4.4).
For fault value = 2:
- If an encoder with Safety position actual values sensing is available (r0458[0...2].19 = 1), reparameterize the encoderless safety technology (p9506 = 1, 3) to safety technology with encoder (p9506 = 0).
See also: r0192 (Power unit firmware properties), p1810 (Modulator configuration), p9506 (SI Motion function specification (Control Unit))

A07440 EPOS: Jerk time is limited

Message value: -

Drive object: VECTOR_G

Reaction: NONE

Acknowledge: NONE

Cause: The calculation of the jerk time Tr = max(p2572, p2573) / p2574 resulted in an excessively high value so that the jerk time is internally limited to 1000 ms.
Note:
The alarm is also output if jerk limiting is not active.

Remedy: - increase the jerk limiting (p2574).
- reduce maximum acceleration or maximum deceleration (p2572, p2573).

A07441 LR: Save the position offset of the absolute encoder adjustment

Message value: -

Drive object: VECTOR_G

Reaction: NONE

Acknowledge: NONE

Cause: The status of the absolute encoder adjustment has changed.
In order to permanently save the determined position offset (p2525) it must be saved in a non-volatile fashion (p0971, p0977).

Remedy: Not necessary.
This alarm automatically disappears after the offset has been saved.

F07442 (A) LR: Multiturn does not match the modulo range

Message value: -

Drive object: VECTOR_G

Reaction: OFF1 (OFF2, OFF3)

Acknowledge: IMMEDIATELY

Cause: The ratio between the multiturn resolution and the modulo range (p2576) is not an integer number.
This results in the adjustment being set back, as the position actual value cannot be reproduced after power-off/power-on.

© Siemens AG 2012 All Rights Reserved

Remedy: Make the ration between the multiturn resolution and the modulo range an integer number.
The ratio v is calculated as follows:
1. Motor encoder without position tracking:
v = (p0421 * p2506 * p0433 * p2505) / (p0432 * p2504 * p2576)
2. Motor encoder with position tracking for the measuring gear:
v = (p0412 * p2506 * p2505) / (p2504 * p2576)
3. Motor encoder with position tracking for the load gear:
v = (p2721 * p2506 * p0433) / (p0432 * p2576)
4. Motor encoder with position tracking for the load and measuring gear:
v = (p2721 * p2506) / p2576
5. Direct encoder without position tracking:
v = (p0421 * p2506 * p0433) / (p0432 * p2576)
6. Direct encoder with position tracking for the measuring gear:
v = (p0412 * p2506) / p2576
Note:
With position tracking, it is recommended that p0412 and p2721 are changed
See also: p0412 (Measuring gear, absolute encoder, rotary, revolutions, virtual), p0432 (Gearbox factor, encoder revolutions), p0433 (Gearbox factor, motor/load revolutions), p2721 (Load gear, rotary absolute encoder, revolutions, virtual)

Reaction upon A: NONE

Acknowl. upon A: NONE

F07443 (A) LR: Reference point coordinate not in the permissible range

Message value: %1

Drive object: VECTOR_G

Reaction: OFF1 (OFF2, OFF3)

Acknowledge: IMMEDIATELY

Cause: The reference point coordinate received when adjusting the encoder via connector input p2599 lies outside the half of the encoder range and cannot be set as actual axis position.
Fault value (r0949, interpret decimal):
Maximum permissible value for the reference point coordinate.

Remedy: Set the reference point coordinate to a lower value than specified in the fault value.

Reaction upon A: NONE

Acknowl. upon A: NONE

F07446 (A) Load gear: Position tracking cannot be reset

Message value: %1

Drive object: VECTOR_G

Reaction: OFF1 (OFF2, OFF3)

Acknowledge: IMMEDIATELY

Cause: The position tracking cannot be reset.

Remedy: Reset the position tracking as follows:
- select encoder commissioning (p0010 = 4).
- reset position tracking, position (p2720.2 = 1).
- de-select encoder commissioning (p0010 = 0).
The fault should then be acknowledged and, if necessary, the absolute encoder adjusted (p2507).

Reaction upon A: NONE

Acknowl. upon A: NONE

F07447 Load gear: Position tracking, maximum actual value exceeded

Message value: Component number: %1, encoder data set: %2, drive data set: %3

Drive object: VECTOR_G

Reaction: NONE

Acknowledge: IMMEDIATELY

Cause: When the position tracking of the load gear is configured, the drive/encoder (motor encoder) identifies a maximum possible absolute position actual value (r2723) that can no longer be represented within 32 bits.
Maximum value: p0408 * p2721 * 2^p0419

© Siemens AG 2012 All Rights Reserved

Fault value (r0949, interpret hexadecimal):
ccbbaa hex
aa = encoder data set
bb = component number
cc = drive data set
See also: p0408 (Rotary encoder pulse No.), p0419 (Fine resolution absolute value Gx_XIST2 (in bits)), p2721 (Load gear, rotary absolute encoder, revolutions, virtual)

Remedy: - reduce the fine resolution (p0419).
- reduce the multiturn resolution (p2721).
See also: p0419 (Fine resolution absolute value Gx_XIST2 (in bits)), p2721 (Load gear, rotary absolute encoder, revolutions, virtual)

F07448 (A) Load gear: Position tracking, linear axis has exceeded the maximum range

Message value: -

Drive object: B_INF, ENC, VECTOR_G

Reaction: Infeed: NONE
Vector: OFF1 (NONE, OFF2, OFF3)

Acknowledge: IMMEDIATELY

Cause: For a configured linear axis/no modulo axis, the currently effective motor encoder (encoder 1) has exceeded the maximum possible traversing range.
For the configured linear axis, the maximum traversing range is defined to be 64x (+/- 32x) of p0421. It should be read in p2721 and interpreted as the number of load revolutions.
Note:
Only the motor encoder in the currently effective drive data set is monitored here. The actual effective drive data set is displayed in x = r0051 and the corresponding motor encoder is specified in in p0187[x].

Remedy: The fault should be resolved as follows:
- select encoder commissioning (p0010 = 4).
- reset position tracking, position (p2720.2 = 1).
- de-select encoder commissioning (p0010 = 0).
The fault should then be acknowledged and the absolute encoder adjusted.

Reaction upon A: NONE

Acknowl. upon A: NONE

F07449 (A) Load gear: Position tracking, actual position outside tolerance window

Message value: %1

Drive object: B_INF, ENC, VECTOR_G

Reaction: Infeed: NONE
Vector: OFF1 (NONE, OFF2, OFF3)

Acknowledge: IMMEDIATELY

Cause: When powered down, the currently effective motor encoder was moved through a distance greater than was parameterized in the tolerance window. It is possible that there is no longer any reference between the mechanical system and encoder.
Note:
Only the motor encoder in the currently effective drive data set is monitored here. The actual effective drive data set is displayed in x = r0051 and the corresponding motor encoder is specified in in p0187[x].
Fault value (r0949, interpret decimal):
Deviation (difference) to the last encoder position in increments of the absolute value after the measuring gear - if one is being used. The sign designates the traversing direction.
Note:
The deviation (difference) found is also displayed in r2724.
See also: p2722 (Load gear, position tracking tolerance window), r2724 (Load gear position difference)

Remedy: Reset the position tracking as follows:
- select encoder commissioning (p0010 = 4).
- reset position tracking, position (p2720.2 = 1).
- de-select encoder commissioning (p0010 = 0).
The fault should then be acknowledged and, if necessary, the absolute encoder adjusted (p2507).
See also: p0010

Reaction upon A: NONE

Acknowl. upon A: NONE

© Siemens AG 2012 All Rights Reserved

F07450 (A) LR: Standstill monitoring has responded

Message value: -
Drive object: VECTOR_G
Reaction: OFF1 (OFF2, OFF3)
Acknowledge: IMMEDIATELY
Cause: After the standstill monitoring time (p2543) expired, the drive left the standstill window (p2542).
- position actual value inversion incorrectly set (p0410).
- standstill window set too small (p2542).
- standstill monitoring time set too low (p2543).
- position loop gain too low (p2538).
- position loop gain too high (instability/oscillation, p2538).
- mechanical overload.
- Connecting cable, motor/drive converter incorrect (phase missing, interchanged).
- when selecting motor identification, select tracking mode (BI: p2655[0] = 1 signal).
- when selecting function generator, select tracking mode (BI: p2655[0] = 1 signal) and de-activate position control (BI:p2550 = 0 signal).

Remedy: Check the causes and resolve.
Reaction upon A: NONE
Acknowl. upon A: NONE

F07451 (A) LR: Position monitoring has responded

Message value: -
Drive object: VECTOR_G
Reaction: OFF1 (OFF2, OFF3)
Acknowledge: IMMEDIATELY
Cause: When the position monitoring time (p2545) expired, the drive had still not reached the positioning window (p2544).
- positioning window parameterized too small (p2544).
- position monitoring time parameterized too short (p2545).
- position loop gain too low (p2538).
- position loop gain too high (instability/oscillation, p2538).
- drive mechanically locked.

Remedy: Check the causes and resolve.
Reaction upon A: NONE
Acknowl. upon A: NONE

F07452 (A) LR: Following error too high

Message value: -
Drive object: VECTOR_G
Reaction: OFF1 (OFF2, OFF3)
Acknowledge: IMMEDIATELY
Cause: The difference between the position setpoint position actual value (following error dynamic model, r2563) is greater than the tolerance (p2546).
- the drive torque or accelerating capacity exceeded.
- position measuring system fault.
- position control sense incorrect.
- mechanical system locked.
- excessively high traversing velocity or excessively high position reference value (setpoint) differences

Remedy: Check the causes and resolve.
Reaction upon A: NONE
Acknowl. upon A: NONE

F07453 LR: Position actual value preprocessing error

Message value: -
Drive object: VECTOR_G
Reaction: OFF1 (OFF2, OFF3)
Acknowledge: IMMEDIATELY
Cause: An error has occurred during the position actual value preprocessing.

© Siemens AG 2012 All Rights Reserved

Remedy: Check the encoder for the position actual value preprocessing.

A07454 LR: Position actual value preprocessing does not have a valid encoder

Message value: -
Drive object: VECTOR_G
Reaction: NONE
Acknowledge: NONE
Cause: One of the following problems has occurred with the position actual value preprocessing:
- an encoder is not assigned for the position actual value preprocessing (p2502 = 0).
- an encoder is assigned, but no encoder data set (p0187 = 99 or p0188 = 99 or p0189 = 99).
- an encoder an an encoder data set have been assigned, however, the encoder data set does not contain any encoder data (p0400 = 0) or invalid data (e.g. p0408 = 0).

Remedy: Check the drive data sets, encoder data sets and encoder assignment.
See also: p0187 (Encoder 1 encoder data set number), p0188 (Encoder 2 encoder data set number), p0189 (Encoder 3 encoder data set number), p0400 (Encoder type selection)

A07455 EPOS: Maximum velocity limited

Message value: -
Drive object: VECTOR_G
Reaction: NONE
Acknowledge: NONE
Cause: The maximum velocity (p2571) is too high to correctly calculate the modulo correction.
Within the sampling time for positioning (p0115[5]), with the maximum velocity, a maximum of the half modulo length must be moved through. p2571 was limited to this value.

Remedy:
- reduce the maximum velocity (p2571).
- increase the sampling time for positioning (p0115[5]).

A07456 EPOS: Setpoint velocity limited

Message value: -
Drive object: VECTOR_G
Reaction: NONE
Acknowledge: NONE
Cause: The actual setpoint velocity is greater than the parameterized maximum velocity (p2571) and is therefore limited.

Remedy:
- check the entered setpoint velocity.
- reduce the velocity override (CI: p2646).
- increase the maximum velocity (p2571).
- check the signal source for the externally limited velocity (CI: p2594).

A07457 EPOS: Combination of input signals illegal

Message value: %1
Drive object: VECTOR_G
Reaction: NONE
Acknowledge: NONE
Cause: An illegal combination of input signals that are simultaneously set was identified.
Alarm value (r2124, interpret decimal):
0: Jog 1 and jog 2 (p2589, p2590).
1: Jog 1 or jog 2 and direct setpoint input/MDI (p2589, p2590, p2647).
2: Jog 1 or jog 2 and start referencing (p2589, p2590, p2595).
3: Jog 1 or jog 2 and activate traversing task (p2589, p2590, p2631).
4: Direct setpoint input/MDI and starting referencing (p2647, p2595).
5: Direct setpoint input/MDI and activate traversing task (p2647, p2631).
6: Start referencing and activate traversing task (p2595, p2631).

Remedy: Check the appropriate input signals and correct.

© Siemens AG 2012 All Rights Reserved

F07458 EPOS: Reference cam not found

Message value: -
Drive object: VECTOR_G
Reaction: OFF1 (OFF2, OFF3)
Acknowledge: IMMEDIATELY
Cause: After starting the search for reference, the axis moved through the maximum permissible distance to search for the reference cam without actually finding the reference cam.
Remedy: - check the "reference cam" binector input (BI: p2612).
- check the maximum permissible distance to the reference cam (p2606).
- if axis does not have any reference cam, then set p2607 to 0.

F07459 EPOS: No zero mark

Message value: -
Drive object: VECTOR_G
Reaction: OFF1 (OFF2, OFF3)
Acknowledge: IMMEDIATELY
Cause: After leaving the reference cam, the axis has traversed the maximum permissible distance between the reference cam and zero mark without finding the zero mark.
Remedy: - check the encoder regarding the zero mark
- check the maximum permissible distance between the reference cam and zero mark (p2609).
- use an external encoder zero mark (equivalent zero mark) (p0495).
See also: p0495 (Equivalent zero mark, input terminal)

F07460 EPOS: End of reference cam not found

Message value: -
Drive object: VECTOR_G
Reaction: OFF1 (OFF2, OFF3)
Acknowledge: IMMEDIATELY
Cause: During the search for reference, when the axis reached the zero mark it also reached the end of the traversing range without detecting an edge at the binector input "reference cam" (BI: p2612).
Maximum traversing range: -2147483648 [LU] ... -2147483647 [LU]
Remedy: - check the "reference cam" binector input (BI: p2612).
- repeat the search for reference.

A07461 EPOS: Reference point not set

Message value: -
Drive object: VECTOR_G
Reaction: NONE
Acknowledge: NONE
Cause: When starting a traversing block/direct setpoint input, a reference point is not set (r2684.11 = 0).
Remedy: Reference the system (search for reference, flying referencing, set reference point).

A07462 EPOS: Selected traversing block number does not exist

Message value: %1
Drive object: VECTOR_G
Reaction: NONE
Acknowledge: NONE
Cause: A traversing block selected via BI: p2625 to BI: p2630 was started via BI: p2631 = 0/1 edge "Activate traversing task".
- the number of the started traversing block is not contained in p2616[0...n].
- the started traversing block is suppressed.
Alarm value (r2124, interpret decimal):
Number of the selected traversing block that is also not available.
Remedy: - correct the traversing program.
- select an available traversing block number.

© Siemens AG 2012 All Rights Reserved

A07463 (F) EPOS: External block change not requested in the traversing block

Message value: %1
Drive object: VECTOR_G
Reaction: NONE
Acknowledge: NONE
Cause: For a traversing block with the block change enable CONTINUE_EXTERNAL_ALARM, the external block change was not requested.
Alarm value (r2124, interpret decimal):
Number of the traversing block.
Remedy: Resolve the reason as to why the edge is missing at binector input (BI: p2632).
Reaction upon F: OFF1
Acknowl. upon F: IMMEDIATELY

F07464 EPOS: Traversing block is inconsistent

Message value: %1
Drive object: VECTOR_G
Reaction: OFF1 (OFF2, OFF3)
Acknowledge: IMMEDIATELY
Cause: The traversing block does not contain valid information.
Alarm value (r2124, interpret decimal):
Number of the traversing block with invalid information.
Remedy: Check the traversing block and where relevant, take into consideration alarms that are present.

A07465 EPOS: Traversing block does not have a subsequent block

Message value: %1
Drive object: VECTOR_G
Reaction: NONE
Acknowledge: NONE
Cause: There is no subsequent block in the traversing block.
Alarm value (r2124, interpret decimal):
Number of the traversing block with the missing subsequent block.
Remedy: - parameterize this traversing block with the block change enable END.
- parameterize additional traversing blocks with a higher block number and for the last block, using the block change enable END.

A07466 EPOS: Traversing block number assigned a multiple number of times

Message value: %1
Drive object: VECTOR_G
Reaction: NONE
Acknowledge: NONE
Cause: The same traversing block number was assigned a multiple number of times.
Alarm value (r2124, interpret decimal):
Number of the traversing block that was assigned a multiple number of times.
Remedy: Correct the traversing blocks.

A07467 EPOS: Traversing block has illegal task parameters

Message value: %1
Drive object: VECTOR_G
Reaction: NONE
Acknowledge: NONE
Cause: The task parameter in the traversing block contains an illegal value.
Alarm value (r2124, interpret decimal):
Number of the traversing block with an illegal task parameter.
Remedy: Correct the task parameter in the traversing block.

© Siemens AG 2012 All Rights Reserved

A07468 EPOS: Traversing block jump destination does not exist

Message value: %1
Drive object: VECTOR_G
Reaction: NONE
Acknowledge: NONE
Cause: In a traversing block, a jump was programmed to a non-existent block.
Alarm value (r2124, interpret decimal):
Number of the traversing block with a jump destination that does not exist.
Remedy: - correct the traversing block.
- add the missing traversing block.

A07469 EPOS: Traversing block < target position < software limit switch minus

Message value: %1
Drive object: VECTOR_G
Reaction: NONE
Acknowledge: NONE
Cause: In the traversing block the specified absolute target position lies outside the range limited by the software limit switch minus.
Alarm value (r2124, interpret decimal):
Number of the traversing block with illegal target position.
Remedy: - correct the traversing block.
- change software limit switch minus (CI: p2578, p2580).

A07470 EPOS: Traversing block> target position > software limit switch plus

Message value: %1
Drive object: VECTOR_G
Reaction: NONE
Acknowledge: NONE
Cause: In the traversing block the specified absolute target position lies outside the range limited by the software limit switch plus.
Alarm value (r2124, interpret decimal):
Number of the traversing block with illegal target position.
Remedy: - correct the traversing block.
- change software limit switch plus (CI: p2579, p2581).

A07471 EPOS: Traversing block target position outside the modulo range

Message value: %1
Drive object: VECTOR_G
Reaction: NONE
Acknowledge: NONE
Cause: In the traversing block the target position lies outside the modulo range.
Alarm value (r2124, interpret decimal):
Number of the traversing block with illegal target position.
Remedy: - in the traversing block, correct the target position.
- change the modulo range (p2576).

A07472 EPOS: Traversing block ABS_POS/ABS_NEG not possible

Message value: %1
Drive object: VECTOR_G
Reaction: NONE
Acknowledge: NONE
Cause: In the traversing block the positioning mode ABS_POS or ABS_NEG were parameterized with the modulo correction not activated.
Alarm value (r2124, interpret decimal):
Number of the traversing block with the illegal positioning mode.
Remedy: Correct the traversing block.

© Siemens AG 2012 All Rights Reserved

A07473 (F) EPOS: Beginning of traversing range reached

Message value: -
Drive object: VECTOR_G
Reaction: NONE
Acknowledge: NONE
Cause: When traversing, the axis has moved to the traversing range limit.
Remedy: Move away in the positive direction.
Reaction upon F: OFF1 (OFF2, OFF3)
Acknowl. upon F: IMMEDIATELY

A07474 (F) EPOS: End of traversing range reached

Message value: -
Drive object: VECTOR_G
Reaction: NONE
Acknowledge: NONE
Cause: When traversing, the axis has moved to the traversing range limit.
Remedy: Move away in the negative direction.
Reaction upon F: OFF1 (OFF2, OFF3)
Acknowl. upon F: IMMEDIATELY

F07475 (A) EPOS: Target position < start of traversing range

Message value: -
Drive object: VECTOR_G
Reaction: OFF1 (OFF2, OFF3)
Acknowledge: IMMEDIATELY
Cause: The target position for relative traversing lies outside the traversing range.
Remedy: Correct the target position.
Reaction upon A: NONE
Acknowl. upon A: NONE

F07476 (A) EPOS: Target position > end of the traversing range

Message value: -
Drive object: VECTOR_G
Reaction: OFF1 (OFF2, OFF3)
Acknowledge: IMMEDIATELY
Cause: The target position for relative traversing lies outside the traversing range.
Remedy: Correct the target position.
Reaction upon A: NONE
Acknowl. upon A: NONE

A07477 (F) EPOS: Target position < software limit switch minus

Message value: -
Drive object: VECTOR_G
Reaction: NONE
Acknowledge: NONE
Cause: In the actual traversing operation, the target position is less than the software limit switch minus.
Remedy: - correct the target position.
- change software limit switch minus (CI: p2578, p2580).
Reaction upon F: OFF1 (OFF2, OFF3)
Acknowl. upon F: IMMEDIATELY

© Siemens AG 2012 All Rights Reserved

A07478 (F) EPOS: Target position > software limit switch plus

Message value: -
Drive object: VECTOR_G
Reaction: NONE
Acknowledge: NONE
Cause: In the actual traversing operation, the target position is greater than the software limit switch plus.
Remedy: - correct the target position.
- change software limit switch plus (CI: p2579, p2581).
Reaction upon F: OFF1 (OFF2, OFF3)
Acknowl. upon F: IMMEDIATELY

A07479 EPOS: Software limit switch minus reached

Message value: -
Drive object: VECTOR_G
Reaction: NONE
Acknowledge: NONE
Cause: The axis is at the position of the software limit switch minus. An active traversing block was interrupted.
Remedy: - correct the target position.
- change software limit switch minus (CI: p2578, p2580).

A07480 EPOS: Software limit switch plus reached

Message value: -
Drive object: VECTOR_G
Reaction: NONE
Acknowledge: NONE
Cause: The axis is at the position of the software limit switch plus. An active traversing block was interrupted.
Remedy: - correct the target position.
- change software limit switch plus (CI: p2579, p2581).

F07481 (A) EPOS: Axis position < software limit switch minus

Message value: -
Drive object: VECTOR_G
Reaction: OFF1 (OFF2, OFF3)
Acknowledge: IMMEDIATELY
Cause: The actual position of the axis is less than the position of the software limit switch minus.
Remedy: - correct the target position.
- change software limit switch minus (CI: p2578, p2580).
Reaction upon A: NONE
Acknowl. upon A: NONE

F07482 (A) EPOS: Axis position > software limit switch plus

Message value: -
Drive object: VECTOR_G
Reaction: OFF1 (OFF2, OFF3)
Acknowledge: IMMEDIATELY
Cause: The actual position of the axis is greater than the position of the software limit switch plus.
Remedy: - correct the target position.
- change software limit switch plus (CI: p2579, p2581).
Reaction upon A: NONE
Acknowl. upon A: NONE

© Siemens AG 2012 All Rights Reserved

A07483 EPOS: Travel to fixed stop clamping torque not reached

Message value: -
Drive object: VECTOR_G
Reaction: NONE
Acknowledge: NONE
Cause: The fixed stop in the traversing block was reached without the clamping torque/clamping force having been achieved.
Remedy: - Check the maximum torque-generating current (r1533).
- check the torque limits (p1520, p1521).
- check the power limits (p1530, p1531).
- check the BICO interconnections of the torque limits (p1522, p1523, p1528, p1529).

F07484 EPOS: Fixed stop outside the monitoring window

Message value: -
Drive object: VECTOR_G
Reaction: OFF3 (OFF1, OFF2)
Acknowledge: IMMEDIATELY
Cause: In the "fixed stop reached" state, the axis has moved outside the defined monitoring window (p2635).
Remedy: - check the monitoring window (p2635).
- check the mechanical system.

F07485 (A) EPOS: Fixed stop not reached

Message value: -
Drive object: VECTOR_G
Reaction: OFF1 (OFF2, OFF3)
Acknowledge: IMMEDIATELY
Cause: In a traversing block with the task FIXED STOP, the end position was reached without detecting a fixed stop.
Remedy: - check the traversing block and locate the target position further into the workpiece.
- check the "fixed stop reached" control signal (p2637).
- if required, reduce the maximum following error window to detect the fixed stop (p2634).
Reaction upon A: NONE
Acknowl. upon A: NONE

A07486 EPOS: Intermediate stop missing

Message value: -
Drive object: VECTOR_G
Reaction: NONE
Acknowledge: NONE
Cause: In the modes "traversing blocks" or "direct setpoint input/MDI" at the start of motion, the binector input "no intermediate stop/intermediate stop" (BI: p2640) did not have a 1 signal.
Remedy: Connect a 1 signal to the binector input "no intermediate stop/intermediate stop" (BI: p2640) and re-start motion.

A07487 EPOS: Reject traversing task missing

Message value: -
Drive object: VECTOR_G
Reaction: NONE
Acknowledge: NONE
Cause: In the modes "traversing blocks" or "direct setpoint input/MDI" at the start of motion, the binector input "do not reject traversing task/reject traversing task" (BI: p2641) does not have a 1 signal.
Remedy: Connect a 1 signal to the binector input "do not reject traversing task/reject traversing task" (BI: p2641) and restart motion.

© Siemens AG 2012 All Rights Reserved

F07488 EPOS: Relative positioning not possible

Message value: -
Drive object: VECTOR_G
Reaction: OFF1 (OFF2, OFF3)
Acknowledge: IMMEDIATELY
Cause: In the mode "direct setpoint input/MDI", for continuous transfer (p2649 = 1) relative positioning was selected (BI: p2648 = 0 signal).
Remedy: Check the control.

A07489 EPOS: Reference point correction outside the window

Message value: -
Drive object: VECTOR_G
Reaction: NONE
Acknowledge: NONE
Cause: For the function "flying referencing" the difference between the measured position at the measuring probe and the reference point coordinate lies outside the parameterized window.
Remedy: - check the mechanical system.
- check the parameterization of the window (p2602).

F07490 EPOS: Enable signal withdrawn while traversing

Message value: -
Drive object: VECTOR_G
Reaction: OFF1 (OFF2, OFF3)
Acknowledge: IMMEDIATELY
Cause: - for a standard assignment, another fault may have occurred as a result of withdrawing the enable signals.
- the drive is in the "switching on inhibited" state (for a standard assignment).
Remedy: - set the enable signals or check the cause of the fault that first occurred and then result (for a standard assignment).
- check the assignment to enable the basic positioning function.

F07491 (A) EPOS: STOP cam minus reached

Message value: -
Drive object: VECTOR_G
Reaction: OFF3
Acknowledge: IMMEDIATELY
Cause: A 0 signal was detected at binector input BI: p2569, i.e. the STOP cam minus was reached.
For a positive traversing direction, the STOP cam minus was reached - i.e. the wiring of the STOP cam is incorrect.
Remedy: - leave the STOP cam minus in the positive traversing direction and return the axis to the valid traversing range.
- check the wiring of the STOP cam.
Reaction upon A: NONE
Acknowl. upon A: NONE

F07492 (A) EPOS: STOP cam plus reached

Message value: -
Drive object: VECTOR_G
Reaction: OFF3
Acknowledge: IMMEDIATELY
Cause: A 0 signal was detected at binector input BI: p2570, i.e. the STOP cam plus was reached.
For a negative traversing direction, the STOP cam plus was reached - i.e. the wiring of the STOP cam is incorrect.
Remedy: - leave the STOP cam plus in the negative traversing direction and return the axis to the valid traversing range.
- check the wiring of the STOP cam.
Reaction upon A: NONE
Acknowl. upon A: NONE

© Siemens AG 2012 All Rights Reserved

F07493 LR: Overflow of the value range for position actual value

Message value: %1

Drive object: VECTOR_G

Reaction: OFF1 (OFF2, OFF3)

Acknowledge: IMMEDIATELY

Cause: The value range (-2147483648 ... 2147483647) for the position actual value representation was exceeded.
When the overflow occurs, the "referenced" or "adjustment absolute measuring system" status is reset.
Fault value (r0949, interpret decimal):
1: The position actual value (r2521) has exceeded the value range.
2: The encoder position actual value Gn_XIST2 (r0483) or the absolute value after the load gear (r2723) has exceeded the value range.
3: The maximum encoder value times the factor to convert the absolute position (r0483 and/or r2723) from increments to length units (LU) has exceeded the value range for displaying the position actual value.
Note:
For a linear encoder, the following must be maintained:
- p0407 * p2503 / (2^p0418*10^7) < 1
- p0407 * p2503 / (2^p0419*10^7) < 1

Remedy: If required, reduce the traversing range or position resolution (p2506).
Increase the fine resolution of absolute position actual value (p0419).
Note for fault value = 3:
If the value for the maximum possible absolute position (LU) is greater than 4294967296, then it is not possible to make an adjustment due to an overflow.
For rotary encoders, the maximum possible absolute position (LU) is calculated as follows:
1. Motor encoder without position tracking
p2506 * p0433 * p2505 / (p0432 * p2504)
p2506 * p0433 * p2505 * p0421 / (p0432 * p2504) for multiturn encoders
2. Motor encoder with position tracking for measuring gear:
p2506 * p0412 * p2505 / p2504
3. Motor encoder with position tracking for load gear
p2506 * p2721 * p0433 / p0432
4. Motor encoder with position tracking for load and measuring gear
p2506 * p2721
5. Direct encoder without position tracking
p2506 * p0433 / p0432
p2506 * p0433 * p0421 / p0432 for multiturn encoders
6. Direct encoder with position tracking for measuring gear
p2506 * p0412

F07494 LR: Drive Data Set changeover in operation

Message value: -

Drive object: VECTOR_G

Reaction: OFF1 (OFF2, OFF3)

Acknowledge: IMMEDIATELY

Cause: A Drive Data Set changeover (DDS) with a change of the mechanical relationships (p2503 ... 2506), direction of rotation (p1821) or the encoder assignment (p2502) was requested in operation.
Note:
DDS: Drive Data Set

Remedy: To changeover the drive data set, initially, exit the "operation" mode.

A07495 (F) LR: Reference function interrupted

Message value: -

Drive object: VECTOR_G

Reaction: NONE

Acknowledge: NONE

Cause: An activated reference function (reference mark search or measuring probe evaluation) was interrupted.
- an encoder fault has occurred (Gn_ZSW.15 = 1).
- position actual value was set during an activated reference function.

© Siemens AG 2012 All Rights Reserved

- simultaneously activate reference mark search and measuring probe evaluation (BI: p2508 and BI: p2509 = 1 signal).
- activated reference function (reference mark search or measuring probe evaluation) was de-activated (BI: p2508 and BI: p2509 = 0 signal).

Remedy: - check the causes and resolve.
- reset the control (BI: p2508 and BI: p2509 = 0 signal) and activate the requested function.

Reaction upon F: OFF1 (OFF2, OFF3)

Acknowl. upon F: IMMEDIATELY

A07496 EPOS: Enable not possible

Message value: %1

Drive object: VECTOR_G

Reaction: NONE

Acknowledge: NONE

Cause: It is not possible to enable the basic positioner because at least one signal is missing.
Alarm value (r2124, interpret decimal):
1: EPOS enable missing (BI: p2656).
2: Position actual value, valid feedback signal missing (BI: p2658).

Remedy: Check the appropriate binector inputs and signals.

A07497 LR: Position setting value activated

Message value: -

Drive object: VECTOR_G

Reaction: NONE

Acknowledge: NONE

Cause: The position actual value is set to the value received via CI: p2515while BI: p2514 = 1 signal. A possible system deviation cannot be corrected.

Remedy: Not necessary.
The alarm automatically disappears with BI: p2514 = 0 signal.

A07498 (F) LR: Measuring probe evaluation not possible

Message value: %1

Drive object: VECTOR_G

Reaction: NONE

Acknowledge: NONE

Cause: When evaluating the measuring probe, an error occurred.
Alarm value (r2124, interpret decimal):
6: The input terminal for the measuring probe is not set.
4098: Error when initializing the measuring probe.
4100: The measuring pulse frequency is too high.
> 50000: The measuring clock cycle is not a multiple integer of the position controller clock cycle.

Remedy: De-activate the measuring probe evaluation (BI: p2509 = 0 signal).
Re alarm value = 6:
Set the input terminal for the measuring probe (p0488, p0489 or p2517, p2518).
Re alarm value = 4098:
Check the Control Unit hardware.
Re alarm value = 4100:
Reduce the frequency of the measuring pulses at the measuring probe.
Re alarm value > 50000:
Set the clock cycle ratio of the measuring clock cycle to the position controller clock cycle to an integer multiple.
To do this, the currently effective measuring clock cycle can be determined from the alarm value as follows:
Tmeas [125 µs] = alarm value - 50000
With PROFIBUS, the measuring clock cycle corresponds to the PROFIBUS clock cycle (r2064[1]).
Without PROFIBUS, the measuring clock cycle is an internal cycle time that cannot be influenced.

Reaction upon F: OFF1

Acknowl. upon F: IMMEDIATELY

© Siemens AG 2012 All Rights Reserved

F07499 (A) EPOS: Reversing cam approached with the incorrect traversing direction

Message value: -
Drive object: VECTOR_G
Reaction: OFF3
Acknowledge: IMMEDIATELY
Cause: The reversing cam MINUS was approached in the positive traversing direction or the reversing cam PLUS was approached in the negative traversing direction.
Remedy: - check the wiring of the reversing cam (BI: p2613, BI: p2614).
- check the traversing direction to approach the reversing cam.
Reaction upon A: NONE
Acknowl. upon A: NONE

F07500 Drive: Power unit data set PDS not configured

Message value: Drive data set: %1
Drive object: All objects
Reaction: NONE
Acknowledge: IMMEDIATELY
Cause: Only for controlled line supply infeed/regenerative feedback units:
The power unit data set was not configured - this means that a data set number was not entered into the drive data set.
Fault value (r0949, interpret decimal):
Drive data set number of p0185.
Remedy: The index of the power unit data set associated with the drive data set should be entered into p0185.

F07501 Drive: Motor Data Set MDS not configured

Message value: Drive data set: %1
Drive object: All objects
Reaction: OFF2
Acknowledge: IMMEDIATELY
Cause: Only for power units:
The motor data set was not configured - this means that a data set number was not entered into the associated drive data set.
Fault value (r0949, interpret decimal):
The fault value includes the drive data set number of p0186.
Remedy: The index of the motor data set associated with the drive data set should be entered into p0186.
See also: p0186 (Motor Data Sets (MDS) number)

F07502 Drive: Encoder Data Set EDS not configured

Message value: Drive data set: %1
Drive object: All objects
Reaction: OFF2
Acknowledge: IMMEDIATELY
Cause: Only for power units:
The encoder data set was not configured - this means that a data set number was not entered into the associated drive data set.
Fault value (r0949, interpret decimal):
The fault value includes the drive data set number of p0187, p0188 and p0189.
The fault value is increased by 100 * encoder number (e.g. for p0189: Fault value 3xx with xx = data set number).
Remedy: The index of the encoder data set associated with the drive data set should be entered into p0187 (1st encoder), p0188 (2nd encoder) and p0189 (3rd encoder).

© Siemens AG 2012 All Rights Reserved

F07503 EPOS: STOP cam approached with the incorrect traversing direction

Message value: %1
Drive object: VECTOR_G
Reaction: NONE
Acknowledge: IMMEDIATELY
Cause: The STOP cam MINUS was approached in the positive traversing direction or the STOP cam PLUS was approached in the negative traversing direction.
Remedy: - check the wiring of the STOP cam (BI: p2569, BI: p2570).
- check the traversing direction to approach the STOP cam.

A07504 Drive: Motor data set is not assigned to a drive data set

Message value: %1
Drive object: B_INF, ENC, VECTOR_G
Reaction: NONE
Acknowledge: NONE
Cause: A motor data set is not assigned to a drive object.
All of the existing motor data sets in the drive data sets must be assigned using the MDS number (p0186[0...n]).
There must be at least as many drive data sets as motor data sets.
Alarm value (r2124, interpret decimal):
Number of the motor data set that has not been assigned.
Remedy: In the drive data sets, assign the non-assigned motor data set using the MDS number (p0186[0...n]).
- check whether all of the motor data sets are assigned to drive data sets.
- if required, delete superfluous motor data sets.
- if required, set up new drive data sets and assign to the corresponding motor data sets.
See also: p0186 (Motor Data Sets (MDS) number)

A07505 EPOS: Task fixed stop not possible in the U/f/SLVC mode

Message value: %1
Drive object: VECTOR_G
Reaction: NONE
Acknowledge: NONE
Cause: In the U/f/SLVC mode, an attempt was made to execute a traversing block with the "fixed stop" task. This is not possible.
Alarm value (r2124, interpret decimal):
Number of the traversing block with an illegal task parameter.
Remedy: - Check the traversing block and change the task.
- change the open-loop/closed-loop control mode (p1300).
See also: p1300 (Open-loop/closed-loop control operating mode)

F07509 Drive: Component number missing

Message value: %1
Drive object: B_INF, ENC, VECTOR_G
Reaction: OFF2
Acknowledge: IMMEDIATELY
Cause: A Drive Data Set (DDS) is assigned to a Motor Data Set (MDS) or Encoder Data Set (EDS) that does not have a component number.
Alarm value (r2124, interpret decimal):
nnmmmxxyyy
nn: Number of the MDS/EDS.
mmm: Parameter number of the missing component number.
xx: Number of the DDS that is assigned to the MDS/EDS.
yyy: Parameter number that references the MDS/EDS.
Example:
p0186[7] = 5: DDS 7 is assigned MDS 5.
p0131[5] = 0: There is no component number set in MDS 5.
Alarm value = 0513107186

© Siemens AG 2012 All Rights Reserved

Remedy: In the drive data sets, no longer assign MDS/EDS using p0186, p0187, p0188, p0189 or set a valid component number.
See also: p0131, p0141, p0142, p0186, p0187, p0188, p0189

F07510 Drive: Identical encoder in the drive data set

Message value: %1
Drive object: All objects
Reaction: OFF2
Acknowledge: IMMEDIATELY
Cause: More than one encoder with identical component number is assigned to a single drive data set. In one drive data set, it is not permissible that identical encoders are operated together.
Fault value (r0949, interpret decimal):
1000 * first identical encoder + 100 * second identical encoder + drive data set.
Example:
Fault value = 1203 means:
In drive data set 3, the first (p0187[3]) and second encoder (p0188[3]) are identical.
Remedy: Assign the drive data set to different encoders.
See also: p0141 (Encoder interface (Sensor Module) component number), p0187 (Encoder 1 encoder data set number), p0188 (Encoder 2 encoder data set number), p0189 (Encoder 3 encoder data set number)

F07511 Drive: Encoder used a multiple number of times

Message value: %1
Drive object: All objects
Reaction: NONE
Acknowledge: IMMEDIATELY
Cause: Each encoder may only be assigned to one drive and within a drive must - in each drive data set - either always be encoder 1, always encoder 2 or always encoder 3. This unique assignment has been violated.
Fault value (r0949, interpret decimal):
The two parameters in coded form, that refer to the same component number.
First parameter:
Index: First and second decimal place (99 for EDS, not assigned DDS)
Parameter number: Third decimal place (1 for p0187, 2 for p0188, 3 for p0189, 4 for EDS not assigned DDS)
Drive number: Fourth and fifth decimal place
Second parameter:
Index: Sixth and seventh decimal place (99 for EDS, not assigned DDS)
Parameter number: Eighth decimal place (1 for p0187, 2 for p0188, 3 for p0189, 4 for EDS, not assigned DDS)
Drive number: Ninth and tenth decimal place
See also: p0141 (Encoder interface (Sensor Module) component number)
Remedy: Correct the double use of a component number using the two parameters coded in the fault value.

F07512 Drive: Encoder data set changeover cannot be parameterized

Message value: %1
Drive object: B_INF, ENC, VECTOR_G
Reaction: OFF2
Acknowledge: IMMEDIATELY
Cause: Using p0141, a changeover of the encoder data set is prepared that is illegal. In this firmware release, an encoder data set changeover is only permitted for the components in the actual topology.
Alarm value (r2124, interpret decimal):
Incorrect EDS data set number.
See also: p0187 (Encoder 1 encoder data set number), p0188 (Encoder 2 encoder data set number), p0189 (Encoder 3 encoder data set number)
Remedy: Every encoder data set must be assigned its own dedicated DRIVE-CLiQ socket. The component numbers of the encoder interfaces (p0141) must have different values within a drive object.
The following must apply:
p0141[0] not equal to p0141[1] not equal to ... not equal to p0141[n]

© Siemens AG 2012 All Rights Reserved

A07514 (N) Drive: Data structure does not correspond to the interface module

Message value: -

Drive object: B_INF, ENC, VECTOR_G

Reaction: NONE

Acknowledge: NONE

Cause: The interface mode "SIMODRIVE 611 universal" was set (p2038 = 1) and the data structure does not correspond to this mode.
The following settings are possible, depending on the number of data sets:
Number of DDS/MDS (p0180/p0130): p0186
1/1: p0186[0] = 0
2/2: p0186[0] = 0, p0186[1] = 1
4/4: p0186[0] = 0, p0186[1] = 1, p0186[2] = 2, p0186[3] = 3
8/8: p0186[0] = 0, p0186[1] = 1, p0186[2] = 2 ... p0186[7] = 7
16/16: p0186[0] = 0, p0186[1] = 1, p0186[2] = 2 ... p0186[15] = 15
32/32: p0186[0] = 0, p0186[1] = 1, p0186[2] = 2 ... p0186[31] = 31
2/1: p0186[0, 1] = 0
4/2: p0186[0, 1] = 0, p0186[1, 2] = 1
8/4: p0186[0, 1] = 0, p0186[1, 2] = 1, p0186[3, 4] = 2, p0186[5, 6] = 3
16/8: p0186[0, 1] = 0, p0186[1, 2] = 1, p0186[3, 4] = 2 ... p0186[14, 15] = 7
32/16: p0186[0, 1] = 0, p0186[1, 2] = 1, p0186[3, 4] = 2 ... p0186[30, 31] = 15
4/1: p0186[0, 1, 2, 3] = 0
8/2: p0186[0, 1, 2, 3] = 0, p0186[4, 5, 6, 7] = 1
16/4: p0186[0, 1, 2, 3] = 0, p0186[4, 5, 6, 7] = 1, p0186[8, 9, 10, 11] = 2, p0186[12, 13, 14, 15] = 3
32/8: p0186[0, 1, 2, 3] = 0, p0186[4, 5, 6, 7] = 1, p0186[8, 9, 10, 11] = 2 ... p0186[28, 29, 30, 31] = 7
8/1: p0186[0...7] = 0
16/2: p0186[0...7] = 0, p0186[8...15] = 1
32/4: p0186[0...7] = 0, p0186[8...15] = 1, p0186[16...23] = 2, p0186[24...31] = 3
16/1: p0186[0...15] = 0
32/2: p0186[0...15] = 0, p0186[16...31] = 1
32/1: p0186[0...31] = 0
9/2: p0186[0...7] = 0, p0186[8] = 1
10/2: p0186[0...7] = 0, p0186[8, 9] = 1
12/2: p0186[0...7] = 0, p0186[8...11] = 1
See also: p0180 (Number of Drive Data Sets (DDS)), p0186 (Motor Data Sets (MDS) number), p2038 (IF1 PROFIdrive STW/ZSW interface mode)

Remedy: - Check the data structure according to the possible settings mentioned in the cause.
- check the interface mode (p2038).

Reaction upon N: NONE

Acknowl. upon N: NONE

F07515 Drive: Power unit and motor incorrectly connected

Message value: %1

Drive object: B_INF, ENC, VECTOR_G

Reaction: OFF2

Acknowledge: IMMEDIATELY

Cause: A power unit (via PDS) was assigned to a motor (via MDS) in a drive data set that is not connected in the target topology. It is possible that a motor has not been assigned to the power unit (p0131).
Fault value (r0949, interpret decimal):
Number of the incorrectly parameterized drive data set.

Remedy: - assign the drive data set to a combination of motor and power unit permitted by the target topology.
- adapt the target topology.
- If required, for a missing motor, recreate the component (drive Wizard).
See also: p0121 (Power unit component number), p0131 (Motor component number), p0186 (Motor Data Sets (MDS) number)

© Siemens AG 2012 All Rights Reserved

F07516 Drive: Re-commission the data set

Message value: %1
Drive object: B_INF, ENC, VECTOR_G
Reaction: NONE
Acknowledge: IMMEDIATELY
Cause: The assignment between the drive data set and motor data set (p0186) or between the drive data set and the encoder data set was modified (p0187). This is the reason that the drive data set must re-commissioned.
Fault value (r0949, interpret decimal):
Drive data set to be re-commissioned.
Remedy: Commission the drive data set specified in the fault value (r0949).

F07517 Drive: Encoder data set changeover incorrectly parameterized

Message value: %1
Drive object: B_INF, ENC, VECTOR_G
Reaction: OFF2
Acknowledge: IMMEDIATELY
Cause: An MDS cannot have different motor encoders in two different DDS.
The following parameterization therefore results results in an error:
p0186[0] = 0, p0187[0] = 0
p0186[0] = 0, p0187[0] = 1
Alarm value (r2124, interpret decimal):
The lower 16 bits indicate the first DDS and the upper 16 bits indicate the second DDS.
Remedy: If you wish to operate a motor once with one motor encoder and then another time with the other motor encoder, then you must set up two different MDSs, in which the motor data are the same.
Example:
p0186[0] = 0, p0187[0] = 0
p0186[0] = 1, p0187[0] = 1

F07518 Drive: Motor data set changeover incorrectly parameterized

Message value: %1
Drive object: B_INF, ENC, VECTOR_G
Reaction: NONE
Acknowledge: IMMEDIATELY
Cause: The system has identified that two motor data sets were incorrectly parameterized.
Parameter r0313 (calculated from p0314, p0310, p0311), r0315 and p1982 may only have different values if the motor data sets are assigned different motors. p0827 is used to assign the motors and/contactors.
It is not possible to toggle between motor data sets.
Alarm value (r2124, interpret hexadecimal):
xxxxyyyy:
xxxx: First DDS with assigned MDS, yyyy: Second DDS with assigned MDS
Remedy: Correct the parameterization of the motor data sets.

A07519 Drive: Motor changeover incorrectly parameterized

Message value: %1
Drive object: VECTOR_G
Reaction: NONE
Acknowledge: NONE
Cause: With the setting p0833.0 = 1, a motor changeover via the application is selected. This is the reason that p0827 must have different values in the appropriate motor data set.
Alarm value (r2124, interpret hexadecimal):
xxxxyyyy:
xxxx: First MDS, yyyy: Second MDS
Remedy: - parameterize the appropriate motor data sets differently (p0827).
- select the setting p0833.0 = 0 (motor changeover via the drive).

© Siemens AG 2012 All Rights Reserved

A07520 Drive: Motor cannot be changed over

Message value: %1

Drive object: VECTOR_G

Reaction: NONE

Acknowledge: NONE

Cause: The motor cannot be changed over.
Alarm value (r2124, interpret decimal):
1:
The contactor for the motor that is presently active cannot be opened, because for a synchronous motor, the speed (r0063) is greater than the speed at the start of field weakening (p3048). As long as r0063 > p0348, the current in the motor does not decay in spite of the pulses being suppressed.
2:
The "contactor opened" feedback signal was not detected within 1 s.
3:
The "contactor closed" feedback signal was not detected within 1 s.

Remedy: Re alarm value = 1:
Set the speed lower than the speed at the start of field weakening (r0063 < p0348).
Re alarm value = 2, 3:
Check the feedback signals of the contactor involved.

A07530 Drive: Drive Data Set DDS not present

Message value: -

Drive object: B_INF, ENC, VECTOR_G

Reaction: NONE

Acknowledge: NONE

Cause: The selected drive data set is not available (p0837 > p0180). The drive data set was not changed over.
See also: p0180, p0820, p0821, p0822, p0823, p0824, r0837

Remedy: - select the existing drive data set.
- set up additional drive data sets.

A07531 Drive: Command Data Set CDS not present

Message value: -

Drive object: All objects

Reaction: NONE

Acknowledge: NONE

Cause: The selected command data set is not available (p0836 > p0170). The command data set was not changed over.
See also: p0810 (Command data set selection CDS bit 0), p0811 (Command data set selection CDS bit 1), r0836 (Command Data Set CDS selected)

Remedy: - select the existing command data set.
- set up additional command data sets.

A07541 Drive: Data set changeover not possible

Message value: -

Drive object: B_INF, ENC, VECTOR_G

Reaction: NONE

Acknowledge: NONE

Cause: The selected drive data set changeover and the assigned motor changeover are not possible and are not carried out.
For synchronous motors, the motor contactor may only be switched for actual speeds less than the speed at the start of field weakening (r0063 < p0348).
See also: r0063 (Speed actual value)

Remedy: Reduce the speed below the speed at the start of field weakening.

© Siemens AG 2012 All Rights Reserved

A07550 (F, N) Drive: Not possible to reset encoder parameters

Message value: %1

Drive object: B_INF, ENC, VECTOR_G

Reaction: NONE

Acknowledge: NONE

Cause: When carrying out a factory setting (e.g. using p0970 = 1), it was not possible to reset the encoder parameters. The encoder parameters are directly read out of the encoder via DRIVE-CLiQ.
Alarm value (r2124, interpret decimal):
Component number of the encoder involved.

Remedy: - repeat the operation.
- check the DRIVE-CLiQ connection.

Reaction upon F: Infeed: NONE (OFF1, OFF2)
Vector: NONE (IASC/DCBRAKE, OFF1, OFF2, OFF3, STOP1, STOP2)

Acknowl. upon F: IMMEDIATELY (POWER ON)

Reaction upon N: NONE

Acknowl. upon N: NONE

F07551 Drive encoder: No commutation angle information

Message value: Fault cause: %1, drive data set: %2

Drive object: VECTOR_G

Reaction: OFF2 (IASC/DCBRAKE)

Acknowledge: IMMEDIATELY (POWER ON)

Cause: The commutation angle information is missing. This means that synchronous motors cannot be controlled (closed-loop control)
Fault value (r0949, interpret decimal):
yyyyxxxx dec: yyyy = fault cause, xxxx = drive data set
yyyy = 1 dec:
The motor encoder used does not supply an absolute commutation angle.
yyyy = 2 dec:
The selected ratio of the measuring gear does not match the motor pole pair number.

Remedy: Re fault cause = 1:
- check the encoder parameterization (p0404).
- use an encoder with track C/D, EnDat interface of Hall sensors.
- use an encoder with sinusoidal A/B track for which the motor pole pair number (r0313) is an integer multiple of the encoder pulse number (p0408).
- activate the pole position identification routine (p1982 = 1).
Re fault cause = 2:
- the quotient of the pole pair number divided by the ratio of the measuring gear must be an integer number: (p0314 * p0433) / p0432.
Note:
For operation with track C/D, this quotient must be less than 8.
See also: p0402 (Gearbox type selection), p0404 (Encoder configuration effective), p0432 (Gearbox factor, encoder revolutions), p0433 (Gearbox factor, motor/load revolutions)

F07552 (A) Drive encoder: Encoder configuration not supported

Message value: Fault cause: %1, component number: %2, encoder data set: %3

Drive object: B_INF, ENC, VECTOR_G

Reaction: Infeed: OFF2 (NONE, OFF1)
Vector: OFF2 (IASC/DCBRAKE, NONE, OFF1, OFF3, STOP1, STOP2)

Acknowledge: IMMEDIATELY (POWER ON)

Cause: The requested encoder configuration is not supported. Only bits may be requested in p0404 that are signaled as being supported by the encoder evaluation in r0456.
Fault value (r0949, interpret decimal):
ccccbbaa hex: cccc = fault cause, bb = component number, aa = encoder data set
cccc = 1: encoder sin/cos with absolute track (is supported by SME25).
cccc = 3: Squarewave encoder (this is supported by SMC30).
cccc = 4: sin/cos encoder (this is supported by SMC20, SMI20, SME20, SME25).
cccc = 10: DRIVE-CLiQ encoder (is supported by DQI).

© Siemens AG 2012 All Rights Reserved

cccc = 12: sin/cos encoder with reference mark (this is supported by SME20).
cccc = 15: Commutation with zero mark for separately-excited synchronous motors with VECTORMV.
cccc = 23: Resolver (this is supported by SMC10, SMI10).
cccc = 65535: Other function (compare r0456 and p0404).
See also: p0404 (Encoder configuration effective), r0456 (Encoder configuration supported)

Remedy: - check the encoder parameterization (p0400, p0404).
- use the matching encoder evaluation (r0456).

Reaction upon A: NONE

Acknowl. upon A: NONE

F07553 (A) Drive encoder: Sensor Module configuration not supported

Message value: Encoder data set: %1, first incorrect bit: %2, incorrect parameter: %3

Drive object: B_INF, ENC, VECTOR_G

Reaction: Infeed: OFF2 (NONE, OFF1)
Vector: OFF2 (IASC/DCBRAKE, NONE, OFF1, OFF3, STOP1, STOP2)

Acknowledge: IMMEDIATELY (POWER ON)

Cause: The Sensor Module does not support the requested configuration.
For incorrect p0430 (cc = 0), the following applies:
- In p0430 (requested functions), at least 1 bit was set that is not set in r0458 (supported functions) (exception: Bit 19, 28, 29, 30, 31).
- p1982 > 0 (pole position identification requested), but r0458.16 = 0 (pole position identification not supported).
For incorrect p0437 (cc = 1), the following applies:
- In p0437 (requested functions), at least 1 bit was set that is not set in r0459 (supported functions).
Fault value (r0949, interpret hexadecimal):
ddccbbaa hex
aa: encoder data set number
bb: first incorrect bit
cc: incorrect parameter
cc = 0: incorrect parameter is p0430
cc = 1: incorrect parameter is p0437
cc = 2: incorrect parameter is r0459
dd: reserved (always 0)

Remedy: - check the encoder parameterization (p0430, p0437).
- check the pole position identification routine (p1982).
- use the matching encoder evaluation (r0458, r0459).
See also: p0430, p0437, r0458, r0459, p1982

Reaction upon A: NONE

Acknowl. upon A: NONE

F07555 (A) Drive encoder: Configuration position tracking

Message value: Component number: %1, encoder data set: %2, drive data set: %3, fault cause: %4

Drive object: B_INF, ENC, VECTOR_G

Reaction: Infeed: OFF2 (NONE, OFF1)
Vector: OFF2 (IASC/DCBRAKE, NONE, OFF1, OFF3, STOP1, STOP2)

Acknowledge: IMMEDIATELY (POWER ON)

Cause: For position tracking, the configuration is not supported.
Position tracking can only be activated for absolute encoders.
For linear axes, it is not possible to simultaneously activate the position tracking for load and measuring gears.
Fault value (r0949, interpret hexadecimal):
ddccbbaa hex
aa = encoder data set
bb = component number
cc = drive data set
dd = fault cause
dd = 00 hex = 0 dec
An absolute encoder is not being used.
dd = 01 hex = 1 dec
Position tracking cannot be activated because the memory of the internal NVRAM is not sufficient or a Control Unit does not have an NVRAM.

© Siemens AG 2012 All Rights Reserved

dd = 02 hex = 2 dec
For a linear axis, the position tracking was activated for the load and measuring gear.
dd = 03 hex = 3 dec
Position tracking cannot be activated because position tracking with another gear ratio, axis type or tolerance window has already been detected for this encoder data set.
dd = 04 hex = 4 dec
A linear encoder is being used.
See also: p0404 (Encoder configuration effective), p0411 (Measuring gear, configuration)

Remedy: - use an absolute encoder.
- if necessary, de-select the position tracking (p0411 for the measuring gear, p2720 for the load gear).
- use a Control Unit with sufficient NVRAM.
- Only activate position tracking of the load gear in the same encoder data set if the gear ratio (p2504, p2505), axis type (p2720.1) and tolerance window (p2722) are also the same.

Reaction upon A: NONE

Acknowl. upon A: NONE

F07556 Measuring gear: Position tracking, maximum actual value exceeded

Message value: Component number: %1, encoder data set: %2

Drive object: B_INF, ENC, VECTOR_G

Reaction: NONE

Acknowledge: IMMEDIATELY

Cause: When the position tracking of the measuring gear is configured, the drive/encoder identifies a maximum possible absolute position actual value (r0483) that cannot be represented within 32 bits.
Maximum value: p0408 * p0412 * 2^p0419
Fault value (r0949, interpret decimal):
aaaayyxx hex: yy = component number, xx = encoder data set
See also: p0408 (Rotary encoder pulse No.), p0412 (Measuring gear, absolute encoder, rotary, revolutions, virtual), p0419 (Fine resolution absolute value Gx_XIST2 (in bits))

Remedy: - reduce the fine resolution (p0419).
- reduce the multiturn resolution (p0412).
See also: p0412 (Measuring gear, absolute encoder, rotary, revolutions, virtual), p0419 (Fine resolution absolute value Gx_XIST2 (in bits))

A07557 (F) Encoder 1: Reference point coordinate not in the permissible range

Message value: %1

Drive object: VECTOR_G

Reaction: NONE

Acknowledge: NONE

Cause: The reference point coordinate received when adjusting the encoder via connector input CI:p2599 lies outside the half of the encoder range and cannot be set as actual axis position. The maximum permissible value is displayed in the supplementary information.

Remedy: Set the reference point coordinate less than the value from the supplementary information.

Reaction upon F: OFF1 (OFF2, OFF3)

Acknowl. upon F: IMMEDIATELY

A07558 (F) Encoder 2: Reference point coordinate not in the permissible range

Message value: %1

Drive object: VECTOR_G

Reaction: NONE

Acknowledge: NONE

Cause: The reference point coordinate received when adjusting the encoder via connector input CI:p2599 lies outside the half of the encoder range and cannot be set as actual axis position. The maximum permissible value is displayed in the supplementary information.

Remedy: Set the reference point coordinate less than the value from the supplementary information.

Reaction upon F: OFF1 (OFF2, OFF3)

Acknowl. upon F: IMMEDIATELY

© Siemens AG 2012 All Rights Reserved

A07559 (F) Encoder 3: Reference point coordinate not in the permissible range

Message value: %1
Drive object: VECTOR_G
Reaction: NONE
Acknowledge: NONE
Cause: The reference point coordinate received when adjusting the encoder via connector input CI:p2599 lies outside the half of the encoder range and cannot be set as actual axis position. The maximum permissible value is displayed in the supplementary information.
Remedy: Set the reference point coordinate less than the value from the supplementary information.
Reaction upon F: OFF1 (OFF2, OFF3)
Acknowl. upon F: IMMEDIATELY

F07560 Drive encoder: Number of pulses is not to the power of two

Message value: Encoder data set: %1
Drive object: B_INF, ENC, VECTOR_G
Reaction: Infeed: OFF2 (NONE, OFF1)
Vector: OFF2 (IASC/DCBRAKE, NONE, OFF1, OFF3, STOP1, STOP2)
Acknowledge: IMMEDIATELY (POWER ON)
Cause: For rotary absolute encoders, the pulse number in p0408 must be to the power of two.
Fault value (r0949, interpret decimal):
The fault value includes the encoder data set number involved.
Remedy: - check the parameterization (p0408, p0404.1, r0458.5).
- upgrade the Sensor Module firmware if necessary

F07561 Drive encoder: Number of multiturn pulses is not to the power of two

Message value: Encoder data set: %1
Drive object: B_INF, ENC, VECTOR_G
Reaction: Infeed: OFF2 (NONE, OFF1)
Vector: OFF2 (IASC/DCBRAKE, NONE, OFF1, OFF3, STOP1, STOP2)
Acknowledge: IMMEDIATELY (POWER ON)
Cause: The multiturn resolution in p0421 must be to the power of two.
Fault value (r0949, interpret decimal):
The fault value includes the encoder data set number involved.
Remedy: - check the parameterization (p0421, p0404.1, r0458.5).
- upgrade the Sensor Module firmware if necessary

F07562 (A) Drive, encoder: Position tracking, incremental encoder not possible

Message value: Fault cause: %1, component number: %2, encoder data set: %3
Drive object: B_INF, ENC, VECTOR_G
Reaction: Infeed: OFF2 (NONE, OFF1)
Vector: OFF2 (IASC/DCBRAKE, NONE, OFF1, OFF3, STOP1, STOP2)
Acknowledge: IMMEDIATELY (POWER ON)
Cause: The requested position tracking for incremental encoders is not supported.
Fault value (r0949, interpret hexadecimal):
ccccbbaa hex
aa = encoder data set
bb = component number
cccc = fault cause
cccc = 00 hex = 0 dec
The encoder type does not support the "Position tracking incremental encoder" function.
cccc = 01 hex = 1 dec
Position tracking cannot be activated because the memory of the internal NVRAM is not sufficient or a Control Unit does not have an NVRAM.
cccc = 04 hex = 4 dec
A linear encoder is used that does not support the "position tracking" function.
See also: p0404 (Encoder configuration effective), p0411 (Measuring gear, configuration), r0456 (Encoder configuration supported)

© Siemens AG 2012 All Rights Reserved

Remedy: - check the encoder parameterization (p0400, p0404).
- use a Control Unit with sufficient NVRAM.
- if required, de-select position tracking for the incremental encoder (p0411.3 = 0).

Reaction upon A: NONE

Acknowl. upon A: NONE

F07563 (A) Drive encoder: XIST1_ERW configuration incorrect

Message value: Fault cause: %1, encoder data set: %2

Drive object: B_INF, ENC, VECTOR_G

Reaction: Infeed: OFF2 (NONE, OFF1)
Vector: OFF2 (IASC/DCBRAKE, NONE, OFF1, OFF3, STOP1, STOP2)

Acknowledge: IMMEDIATELY (POWER ON)

Cause: An incorrect configuration was identified for the "Absolute position for incremental encoder" function.
Fault value (r0949, interpret decimal):
Fault cause:
1 (= 01 hex):
The "Absolute value for incremental encoder" function is not supported (r0459.13 = 0).
Note regarding the message value:
The individual information is coded as follows in the message value (r0949/r2124):
yyxx dec: yy = fault cause, xx = encoder data set
See also: r0459 (Sensor Module properties extended), p4652 (XIST1_ERW reset mode)

Remedy: For fault value = 1:
- upgrade the Sensor Module firmware version.
- check the mode (p4652 = 1, 3 requires the property r0459.13 = 1).

Reaction upon A: NONE

Acknowl. upon A: NONE

A07565 (F, N) Drive: Encoder error in PROFIdrive encoder interface 1

Message value: %1

Drive object: B_INF, ENC, VECTOR_G

Reaction: NONE

Acknowledge: NONE

Cause: An encoder error was signaled for encoder 1 via the PROFIdrive encoder interface (G1_ZSW.15).
Alarm value (r2124, interpret decimal):
Error code from G1_XIST2, refer to the description regarding r0483.
Note:
This alarm is only output if p0480[0] is not equal to zero.

Remedy: Acknowledge the encoder error using the encoder control word (G1_STW.15 = 1).

Reaction upon F: Infeed: NONE (OFF1, OFF2)
Vector: NONE (OFF1, OFF2, OFF3)

Acknowl. upon F: IMMEDIATELY

Reaction upon N: NONE

Acknowl. upon N: NONE

A07566 (F, N) Drive: Encoder error in PROFIdrive encoder interface 2

Message value: %1

Drive object: VECTOR_G

Reaction: NONE

Acknowledge: NONE

Cause: An encoder error was signaled for encoder 2 via the PROFIdrive encoder interface (G2_ZSW.15).
Alarm value (r2124, interpret decimal):
Error code from G2_XIST2, refer to the description regarding r0483.
Note:
This alarm is only output if p0480[1] is not equal to zero.

Remedy: Acknowledge the encoder error using the encoder control word (G2_STW.15 = 1).

Reaction upon F: NONE (OFF1, OFF2, OFF3)

Acknowl. upon F: IMMEDIATELY

© Siemens AG 2012 All Rights Reserved

Reaction upon N: NONE
Acknowl. upon N: NONE

A07567 (F, N) Drive: Encoder error in PROFIdrive encoder interface 3

Message value: %1
Drive object: VECTOR_G
Reaction: NONE
Acknowledge: NONE
Cause: An encoder error was signaled for encoder 3 via the PROFIdrive encoder interface (G3_ZSW.15).
Alarm value (r2124, interpret decimal):
Error code from G3_XIST2, refer to the description regarding r0483.
Note:
This alarm is only output if p0480[2] is not equal to zero.
Remedy: Acknowledge the encoder error using the encoder control word (G3_STW.15 = 1).
Reaction upon F: NONE (OFF1, OFF2, OFF3)
Acknowl. upon F: IMMEDIATELY
Reaction upon N: NONE
Acknowl. upon N: NONE

A07569 (F) Encoder could not be identified

Message value: -
Drive object: B_INF, ENC, VECTOR_G
Reaction: NONE
Acknowledge: NONE
Cause: During encoder identification (waiting) with p0400 = 10100, the encoder could not be identified.
Either the wrong encoder has been installed or no encoder has been installed, the wrong encoder cable has been connected or no encoder cable has been connected to the Sensor Module, or the DRIVE-CLiQ component has not been connected to DRIVE-CLiQ.
Note:
Encoder identification must be supported by the encoder and is possible in the following cases:
- Encoder with EnDat interface
- Motor with DRIVE-CLiQ
Remedy: - check and, if necessary, connect the encoder and/or encoder cable.
- check and, if necessary, establish the DRIVE-CLiQ connection.
- in the case of encoders that cannot be identified (e.g. encoders without EnDat interface), the correct encoder type must be entered in p0400.
Reaction upon F: Infeed: NONE (OFF1, OFF2)
Vector: NONE (OFF1, OFF2, OFF3)
Acknowl. upon F: IMMEDIATELY

F07575 Drive: Motor encoder not ready

Message value: -
Drive object: B_INF, ENC, VECTOR_G
Reaction: Infeed: OFF2
Vector: OFF2 (ENCODER)
Acknowledge: IMMEDIATELY
Cause: The motor encoder signals that it is not ready.
- initialization of encoder 1 (motor encoder) was unsuccessful.
- the function "parking encoder" is active (encoder control word G1_STW.14 = 1).
- the encoder interface (Sensor Module) is de-activated (p0145).
- the Sensor Module is defective.
Remedy: Evaluate other queued faults via encoder 1.

© Siemens AG 2012 All Rights Reserved

A07576 Drive: Encoderless operation due to a fault active

Message value: -

Drive object: VECTOR_G

Reaction: NONE

Acknowledge: NONE

Cause: Encoderless operation is active due to a fault (r1407.13 = 1).
Note:
The behavior for faults has been set to ENCODER fault response in p0491.
See also: p0491 (Motor encoder fault response ENCODER)

Remedy: - remove the cause of a possible encoder fault.
- carry out a POWER ON (power off/on) for all components.

A07577 (F) Encoder 1: Measuring probe evaluation not possible

Message value: %1

Drive object: VECTOR_G

Reaction: NONE

Acknowledge: NONE

Cause: When evaluating the measuring probe, an error occurred.
Alarm value (r2124, interpret decimal):
6: The input terminal for the measuring probe is not set.
4098: Error when initializing the measuring probe.
4100: The measuring pulse frequency is too high.
4200: The PROFIBUS clock cycle is not a multiple of integer of the position controller clock cycle.

Remedy: De-activate the measuring probe evaluation (BI: p2509 = 0 signal).
Re alarm value = 6:
Set the input terminal for the measuring probe (p0488, p0489 or p2517, p2518).
Re alarm value = 4098:
Check the Control Unit hardware.
Re alarm value = 4100:
Reduce the frequency of the measuring pulses at the measuring probe.
Re alarm value = 4200:
Set the clock cycle ratio between the PROFIBUS clock cycle and the position controller clock cycle to an integer multiple.

Reaction upon F: OFF1

Acknowl. upon F: IMMEDIATELY

A07578 (F) Encoder 2: Measuring probe evaluation not possible

Message value: %1

Drive object: VECTOR_G

Reaction: NONE

Acknowledge: NONE

Cause: When evaluating the measuring probe, an error occurred.
Alarm value (r2124, interpret decimal):
6: The input terminal for the measuring probe is not set.
4098: Error when initializing the measuring probe.
4100: The measuring pulse frequency is too high.
4200: The PROFIBUS clock cycle is not a multiple of integer of the position controller clock cycle.

Remedy: De-activate the measuring probe evaluation (BI: p2509 = 0 signal).
Re alarm value = 6:
Set the input terminal for the measuring probe (p0488, p0489 or p2517, p2518).
Re alarm value = 4098:
Check the Control Unit hardware.
Re alarm value = 4100:
Reduce the frequency of the measuring pulses at the measuring probe.
Re alarm value = 4200:
Set the clock cycle ratio between the PROFIBUS clock cycle and the position controller clock cycle to an integer multiple.

© Siemens AG 2012 All Rights Reserved

Reaction upon F: OFF1
Acknowl. upon F: IMMEDIATELY

A07579 (F) Encoder 3: Measuring probe evaluation not possible

Message value: %1
Drive object: VECTOR_G
Reaction: NONE
Acknowledge: NONE
Cause: When evaluating the measuring probe, an error occurred.
Alarm value (r2124, interpret decimal):
6: The input terminal for the measuring probe is not set.
4098: Error when initializing the measuring probe.
4100: The measuring pulse frequency is too high.
4200: The PROFIBUS clock cycle is not a multiple of integer of the position controller clock cycle.
Remedy: De-activate the measuring probe evaluation (BI: p2509 = 0 signal).
Re alarm value = 6:
Set the input terminal for the measuring probe (p0488, p0489 or p2517, p2518).
Re alarm value = 4098:
Check the Control Unit hardware.
Re alarm value = 4100:
Reduce the frequency of the measuring pulses at the measuring probe.
Re alarm value = 4200:
Set the clock cycle ratio between the PROFIBUS clock cycle and the position controller clock cycle to an integer multiple.
Reaction upon F: OFF1
Acknowl. upon F: IMMEDIATELY

A07580 (F, N) Drive: No Sensor Module with matching component number

Message value: Encoder data set: %1
Drive object: B_INF, ENC, VECTOR_G
Reaction: NONE
Acknowledge: NONE
Cause: A Sensor Module with the component number specified in p0141 was not found.
Alarm value (r2124, interpret decimal):
Encoder data set involved (index of p0141).
Remedy: Correct parameter p0141.
Reaction upon F: Infeed: OFF1 (NONE, OFF2)
Vector: OFF1 (IASC/DCBRAKE, NONE, OFF2, OFF3, STOP1, STOP2)
Acknowl. upon F: IMMEDIATELY (POWER ON)
Reaction upon N: NONE
Acknowl. upon N: NONE

A07581 (F) Encoder 1: Position actual value preprocessing error

Message value: -
Drive object: VECTOR_G
Reaction: NONE
Acknowledge: NONE
Cause: An error has occurred during the position actual value preprocessing.
Remedy: Check the encoder for the position actual value preprocessing.
Reaction upon F: OFF1 (OFF2, OFF3)
Acknowl. upon F: IMMEDIATELY

© Siemens AG 2012 All Rights Reserved

A07582 (F) Encoder 2: Position actual value preprocessing error

Message value: -
Drive object: VECTOR_G
Reaction: NONE
Acknowledge: NONE
Cause: An error has occurred during the position actual value preprocessing.
Remedy: Check the encoder for the position actual value preprocessing.
Reaction upon F: OFF1 (OFF2, OFF3)
Acknowl. upon F: IMMEDIATELY

A07583 (F) Encoder 3: Position actual value preprocessing error

Message value: -
Drive object: VECTOR_G
Reaction: NONE
Acknowledge: NONE
Cause: An error has occurred during the position actual value preprocessing.
Remedy: Check the encoder for the position actual value preprocessing.
Reaction upon F: OFF1 (OFF2, OFF3)
Acknowl. upon F: IMMEDIATELY

A07584 Encoder 1: Position setting value activated

Message value: -
Drive object: VECTOR_G
Reaction: NONE
Acknowledge: NONE
Cause: The position actual value is set to the value received via CI: p2515while BI: p2514 = 1 signal. A possible system deviation cannot be corrected.
Remedy: Not necessary.
The alarm automatically disappears with BI: p2514 = 0 signal.

A07585 Encoder 2: Position setting value activated

Message value: -
Drive object: VECTOR_G
Reaction: NONE
Acknowledge: NONE
Cause: The position actual value is set to the value received via CI: p2515while BI: p2514 = 1 signal. A possible system deviation cannot be corrected.
Remedy: Not necessary.
The alarm automatically disappears with BI: p2514 = 0 signal.

A07586 Encoder 3: Position setting value activated

Message value: -
Drive object: VECTOR_G
Reaction: NONE
Acknowledge: NONE
Cause: The position actual value is set to the value received via CI: p2515while BI: p2514 = 1 signal. A possible system deviation cannot be corrected.
Remedy: Not necessary.
The alarm automatically disappears with BI: p2514 = 0 signal.

© Siemens AG 2012 All Rights Reserved

A07587 Encoder 1: Position actual value preprocessing does not have a valid encoder

Message value: -
Drive object: VECTOR_G
Reaction: NONE
Acknowledge: NONE
Cause: The following problem has occurred during the position actual value preprocessing.
- an encoder data set has been assigned, however, the encoder data set does not contain any encoder data (p0400 = 0) or invalid data (e.g. p0408 = 0).
Remedy: Check the drive data sets, encoder data sets.
See also: p0187 (Encoder 1 encoder data set number), p0188 (Encoder 2 encoder data set number), p0189 (Encoder 3 encoder data set number), p0400 (Encoder type selection)

A07588 Encoder 2: Position actual value preprocessing does not have a valid encoder

Message value: -
Drive object: VECTOR_G
Reaction: NONE
Acknowledge: NONE
Cause: The following problem has occurred during the position actual value preprocessing.
- an encoder data set has been assigned, however, the encoder data set does not contain any encoder data (p0400 = 0) or invalid data (e.g. p0408 = 0).
Remedy: Check the drive data sets, encoder data sets.
See also: p0187 (Encoder 1 encoder data set number), p0188 (Encoder 2 encoder data set number), p0189 (Encoder 3 encoder data set number), p0400 (Encoder type selection)

A07589 Encoder 3: Position actual value preprocessing does not have a valid encoder

Message value: -
Drive object: VECTOR_G
Reaction: NONE
Acknowledge: NONE
Cause: The following problem has occurred during the position actual value preprocessing.
- an encoder data set has been assigned, however, the encoder data set does not contain any encoder data (p0400 = 0) or invalid data (e.g. p0408 = 0).
Remedy: Check the drive data sets, encoder data sets.
See also: p0187 (Encoder 1 encoder data set number), p0188 (Encoder 2 encoder data set number), p0189 (Encoder 3 encoder data set number), p0400 (Encoder type selection)

A07590 (F) Encoder 1: Drive Data Set changeover in operation

Message value: -
Drive object: VECTOR_G
Reaction: NONE
Acknowledge: NONE
Cause: A Drive Data Set changeover (DDS) with a change of the mechanical relationships and the encoder assignment (p2502) was requested in operation.
Remedy: To changeover the drive data set, initially, exit the "operation" mode.
Reaction upon F: OFF1 (OFF2, OFF3)
Acknowl. upon F: IMMEDIATELY

A07591 (F) Encoder 2: Drive Data Set changeover in operation

Message value: -
Drive object: VECTOR_G
Reaction: NONE
Acknowledge: NONE
Cause: A Drive Data Set changeover (DDS) with a change of the mechanical relationships and the encoder assignment (p2502) was requested in operation.
Remedy: To changeover the drive data set, initially, exit the "operation" mode.

© Siemens AG 2012 All Rights Reserved

Reaction upon F: OFF1 (OFF2, OFF3)
Acknowl. upon F: IMMEDIATELY

A07592 (F) Encoder 3: Drive Data Set changeover in operation

Message value: -
Drive object: VECTOR_G
Reaction: NONE
Acknowledge: NONE
Cause: A Drive Data Set changeover (DDS) with a change of the mechanical relationships and the encoder assignment (p2502) was requested in operation.
Remedy: To changeover the drive data set, initially, exit the "operation" mode.
Reaction upon F: OFF1 (OFF2, OFF3)
Acknowl. upon F: IMMEDIATELY

A07593 (F, N) Encoder 1: Value range for position actual value exceeded

Message value: %1
Drive object: VECTOR_G
Reaction: NONE
Acknowledge: NONE
Cause: The value range (-2147483648 ... 2147483647) for the position actual value representation was exceeded.
When the overflow occurs, the "referenced" or "adjustment absolute measuring system" status is reset.
Fault value (r0949, interpret decimal):
1: The position actual value (r2521) has exceeded the value range.
2: The encoder position actual value Gn_XIST2 (r0483) or the absolute value after the load gear (r2723) has exceeded the value range.
3: The maximum encoder value times the factor to convert the absolute position (r0483 and/or r2723) from increments to length units (LU) has exceeded the value range for displaying the position actual value.
Remedy: If required, reduce the traversing range or position resolution.
Re alarm value = 3:
Reducing the position resolution and conversion factor:
- reduce the length unit (LU) per load revolution for rotary encoders (p2506).
- increase the fine resolution of absolute position actual values (p0419).
Reaction upon F: OFF1 (OFF2, OFF3)
Acknowl. upon F: IMMEDIATELY
Reaction upon N: NONE
Acknowl. upon N: NONE

A07594 (F, N) Encoder 2: Value range for position actual value exceeded

Message value: %1
Drive object: VECTOR_G
Reaction: NONE
Acknowledge: NONE
Cause: The value range (-2147483648 ... 2147483647) for the position actual value representation was exceeded.
When the overflow occurs, the "referenced" or "adjustment absolute measuring system" status is reset.
Fault value (r0949, interpret decimal):
1: The position actual value (r2521) has exceeded the value range.
2: The encoder position actual value Gn_XIST2 (r0483) or the absolute value after the load gear (r2723) has exceeded the value range.
3: The maximum encoder value times the factor to convert the absolute position (r0483 and/or r2723) from increments to length units (LU) has exceeded the value range for displaying the position actual value.
Remedy: If required, reduce the traversing range or position resolution.
Re alarm value = 3:
Reducing the position resolution and conversion factor:
- reduce the length unit (LU) per load revolution for rotary encoders (p2506).
- increase the fine resolution of absolute position actual values (p0419).
Reaction upon F: OFF1 (OFF2, OFF3)
Acknowl. upon F: IMMEDIATELY

© Siemens AG 2012 All Rights Reserved

Reaction upon N: NONE
Acknowl. upon N: NONE

A07595 (F, N) Encoder 3: Value range for position actual value exceeded

Message value: %1
Drive object: VECTOR_G
Reaction: NONE
Acknowledge: NONE
Cause: The value range (-2147483648 ... 2147483647) for the position actual value representation was exceeded.
When the overflow occurs, the "referenced" or "adjustment absolute measuring system" status is reset.
Fault value (r0949, interpret decimal):
1: The position actual value (r2521) has exceeded the value range.
2: The encoder position actual value Gn_XIST2 (r0483) or the absolute value after the load gear (r2723) has exceeded the value range.
3: The maximum encoder value times the factor to convert the absolute position (r0483 and/or r2723) from increments to length units (LU) has exceeded the value range for displaying the position actual value.
Remedy: If required, reduce the traversing range or position resolution.
Re alarm value = 3:
Reducing the position resolution and conversion factor:
- reduce the length unit (LU) per load revolution for rotary encoders (p2506).
- increase the fine resolution of absolute position actual values (p0419).
Reaction upon F: OFF1 (OFF2, OFF3)
Acknowl. upon F: IMMEDIATELY
Reaction upon N: NONE
Acknowl. upon N: NONE

A07596 (F) Encoder 1: Reference function interrupted

Message value: -
Drive object: VECTOR_G
Reaction: NONE
Acknowledge: NONE
Cause: An activated reference function (reference mark search or measuring probe evaluation) was interrupted.
- an encoder fault has occurred (Gn_ZSW.15 = 1).
- position actual value was set during an activated reference function.
- simultaneously activate reference mark search and measuring probe evaluation (BI: p2508 and BI: p2509 = 1 signal).
- activated reference function (reference mark search or measuring probe evaluation) was de-activated (BI: p2508 and BI: p2509 = 0 signal).
Remedy: - check the causes and resolve.
- reset the control (BI: p2508 and BI: p2509 = 0 signal) and activate the requested function.
Reaction upon F: OFF1 (OFF2, OFF3)
Acknowl. upon F: IMMEDIATELY

A07597 (F) Encoder 2: Reference function interrupted

Message value: -
Drive object: VECTOR_G
Reaction: NONE
Acknowledge: NONE
Cause: An activated reference function (reference mark search or measuring probe evaluation) was interrupted.
- an encoder fault has occurred (Gn_ZSW.15 = 1).
- position actual value was set during an activated reference function.
- simultaneously activate reference mark search and measuring probe evaluation (BI: p2508 and BI: p2509 = 1 signal).
- activated reference function (reference mark search or measuring probe evaluation) was de-activated (BI: p2508 and BI: p2509 = 0 signal).
Remedy: - check the causes and resolve.
- reset the control (BI: p2508 and BI: p2509 = 0 signal) and activate the requested function.

© Siemens AG 2012 All Rights Reserved

Reaction upon F: OFF1 (OFF2, OFF3)
Acknowl. upon F: IMMEDIATELY

A07598 (F) Encoder 3: Reference function interrupted

Message value: -
Drive object: VECTOR_G
Reaction: NONE
Acknowledge: NONE
Cause: An activated reference function (reference mark search or measuring probe evaluation) was interrupted.
- an encoder fault has occurred (Gn_ZSW.15 = 1).
- position actual value was set during an activated reference function.
- simultaneously activate reference mark search and measuring probe evaluation (BI: p2508 and BI: p2509 = 1 signal).
- activated reference function (reference mark search or measuring probe evaluation) was de-activated (BI: p2508 and BI: p2509 = 0 signal).

Remedy: - check the causes and resolve.
- reset the control (BI: p2508 and BI: p2509 = 0 signal) and activate the requested function.

Reaction upon F: OFF1 (OFF2, OFF3)
Acknowl. upon F: IMMEDIATELY

F07599 (A) Encoder 1: Adjustment not possible

Message value: Drive data set: %1
Drive object: VECTOR_G
Reaction: OFF1 (NONE, OFF2, OFF3)
Acknowledge: IMMEDIATELY
Cause: The maximum encoder value times the factor to convert the absolute position (r0483 and/or r2723) from increments to length units (LU) has exceeded the value range (-2147483648 ... 2147483647) for displaying the position actual value.

Remedy: If the value for the maximum possible absolute position (LU) is greater than 4294967296, then it is not possible to make an adjustment due to an overflow.
For rotary encoders, the maximum possible absolute position (LU) is calculated as follows:
1. Motor encoder without position tracking:
p2506 * p0433 * p2505 / (p0432 * p2504)
p2506 * p0433 * p2505 * p0421 / (p0432 * p2504) for multiturn encoders
2. Motor encoder with position tracking for measuring gear:
p2506 * p0412 * p2505 / p2504
3. Motor encoder with position tracking for load gear:
p2506 * p2721 * p0433 / p0432
4. Motor encoder with position tracking for load and measuring gear:
p2506 * p2721
5. Direct encoder without position tracking:
p2506 * p0433 / p0432
p2506 * p0433 * p0421 / p0432 for multiturn encoders
6. Direct encoder with position tracking for measuring gear:
p2506 * p0412

Reaction upon A: NONE
Acknowl. upon A: NONE

F07600 (A) Encoder 2: Adjustment not possible

Message value: Drive data set: %1
Drive object: VECTOR_G
Reaction: OFF1 (NONE, OFF2, OFF3)
Acknowledge: IMMEDIATELY
Cause: The maximum encoder value times the factor to convert the absolute position (r0483 and/or r2723) from increments to length units (LU) has exceeded the value range (-2147483648 ... 2147483647) for displaying the position actual value.

Remedy: If the value for the maximum possible absolute position (LU) is greater than 4294967296, then it is not possible to make an adjustment due to an overflow.

© Siemens AG 2012 All Rights Reserved

For rotary encoders, the maximum possible absolute position (LU) is calculated as follows:
1. Motor encoder without position tracking:
p2506 * p0433 * p2505 / (p0432 * p2504)
p2506 * p0433 * p2505 * p0421 / (p0432 * p2504) for multiturn encoders
2. Motor encoder with position tracking for measuring gear:
p2506 * p0412 * p2505 / p2504
3. Motor encoder with position tracking for load gear:
p2506 * p2721 * p0433 / p0432
4. Motor encoder with position tracking for load and measuring gear:
p2506 * p2721
5. Direct encoder without position tracking:
p2506 * p0433 / p0432
p2506 * p0433 * p0421 / p0432 for multiturn encoders
6. Direct encoder with position tracking for measuring gear:
p2506 * p0412

Reaction upon A: NONE

Acknowl. upon A: NONE

F07601 (A) Encoder 3: Adjustment not possible

Message value: Drive data set: %1

Drive object: VECTOR_G

Reaction: OFF1 (NONE, OFF2, OFF3)

Acknowledge: IMMEDIATELY

Cause: The maximum encoder value times the factor to convert the absolute position (r0483 and/or r2723) from increments to length units (LU) has exceeded the value range (-2147483648 ... 2147483647) for displaying the position actual value.

Remedy: If the value for the maximum possible absolute position (LU) is greater than 4294967296, then it is not possible to make an adjustment due to an overflow.
For rotary encoders, the maximum possible absolute position (LU) is calculated as follows:
1. Motor encoder without position tracking:
p2506 * p0433 * p2505 / (p0432 * p2504)
p2506 * p0433 * p2505 * p0421 / (p0432 * p2504) for multiturn encoders
2. Motor encoder with position tracking for measuring gear:
p2506 * p0412 * p2505 / p2504
3. Motor encoder with position tracking for load gear:
p2506 * p2721 * p0433 / p0432
4. Motor encoder with position tracking for load and measuring gear:
p2506 * p2721
5. Direct encoder without position tracking:
p2506 * p0433 / p0432
p2506 * p0433 * p0421 / p0432 for multiturn encoders
6. Direct encoder with position tracking for measuring gear:
p2506 * p0412

Reaction upon A: NONE

Acknowl. upon A: NONE

F07800 Drive: No power unit present

Message value: -

Drive object: B_INF, VECTOR_G

Reaction: NONE

Acknowledge: IMMEDIATELY

Cause: The power unit parameters cannot be read or no parameters are stored in the power unit.
It is possible that the DRIVE-CLiQ cable between the Control Unit and power unit is interrupted or defective.
Note:
This fault also occurs if an incorrect topology was selected in the commissioning software and this parameterization is then downloaded to the Control Unit.
See also: r0200 (Power unit code number actual)

© Siemens AG 2012 All Rights Reserved

Remedy:
- carry out a POWER ON (power off/on) for all components.
- check the DRIVE-CLiQ cable between the Control Unit and power unit.
- Check the power unit and replace if necessary.
- check the Control Unit, and if required replace it.
- after correcting the topology, the parameters must be again downloaded using the commissioning software.

F07801 Drive: Motor overcurrent

Message value: -

Drive object: VECTOR_G

Reaction: OFF2 (NONE, OFF1, OFF3)

Acknowledge: IMMEDIATELY

Cause: The permissible motor limit current was exceeded.
- effective current limit set too low.
- current controller not correctly set.
- U/f operation: Up ramp was set too short or the load is too high.
- U/f operation: Short-circuit in the motor cable or ground fault.
- U/f operation: Motor current does not match current of power unit.
- Switch to rotating motor without flying restart function (p1200).

Note:
Limit current = 2 x minimum (p0640, 4 x p0305 x p0306) >= 2 x p0305 x p0306

Remedy:
- check the current limits (p0640).
- vector control: Check the current controller (p1715, p1717).
- U/f control: Check the current limiting controller (p1340 ... p1346).
- increase the up ramp (p1120) or reduce the load.
- check the motor and motor cables for short-circuit and ground fault.
- check the motor for the star-delta configuration and rating plate parameterization.
- check the power unit and motor combination.
- Choose "flying restart" function (p1200) if switched to rotating motor.

F07802 Drive: Infeed or power unit not ready

Message value: -

Drive object: VECTOR_G

Reaction: OFF2 (NONE)

Acknowledge: IMMEDIATELY

Cause: After an internal power-on command, the infeed or drive does not signal ready.
- monitoring time is too short.
- DC link voltage is not present.
- associated infeed or drive of the signaling component is defective.
- supply voltage incorrectly set.

Remedy:
- increase the monitoring time (p0857).
- ensure that there is a DC link voltage. Check the DC link busbar. Enable the infeed.
- replace the associated infeed or drive of the signaling component.
- check the line supply voltage setting (p0210).

See also: p0857 (Power unit monitoring time)

A07805 (N) Infeed: Power unit overload I2t

Message value: -

Drive object: B_INF

Reaction: NONE

Acknowledge: NONE

Cause: Alarm threshold for I2t overload (p0294) of the power unit exceeded.

Remedy:
- reduce the continuous load.
- adapt the load duty cycle.

Reaction upon N: NONE

Acknowl. upon N: NONE

© Siemens AG 2012 All Rights Reserved

A07805 (N) Drive: Power unit overload I2t

Message value: -
Drive object: VECTOR_G
Reaction: NONE
Acknowledge: NONE
Cause: Alarm threshold for I2t overload (p0294) of the power unit exceeded.
The response parameterized in p0290 becomes active.
See also: p0290 (Power unit overload response)
Remedy: - reduce the continuous load.
- adapt the load duty cycle.
- check the assignment of the rated currents of the motor and Motor Module.
Reaction upon N: NONE
Acknowl. upon N: NONE

F07807 Drive: Short-circuit/ground fault detected

Message value: %1
Drive object: VECTOR_G
Reaction: OFF2 (NONE)
Acknowledge: IMMEDIATELY
Cause: A phase-phase short-circuit or ground fault was detected at the motor-side output terminals of the converter.
Fault value (r0949, interpret decimal):
1: Short-circuit, phases U-V
2: Short-circuit, phases U-W
3: Short-circuit, phases V-W
4: Ground fault with overcurrent
1xxxx: Ground fault with current in phase U detected (xxxx = component of the current in phase V in per mille)
2xxxx: Ground fault with current in phase V detected (xxxx = component of the current in phase U in per mille)
Note:
Also when interchanging the line and motor cables is identified as a motor-side short circuit.
Connecting to a motor that is either not de-energized or partially de-energized is possibly detected as ground fault.
Remedy: - check the motor-side converter connection for a phase-phase short-circuit.
- rule-out interchanged line and motor cables.
- check for a ground fault.
For a ground fault:
- do not enable the pulses when connecting to a rotating motor without the "Flying restart" function activated (p1200).
- increase the de-energization time (p0347).
- If required, deactivate the monitoring (p1901).

F07808 (A) HF damping module: damping not ready

Message value: New message: %1
Drive object: VECTOR_G
Reaction: OFF2 (NONE, OFF1, OFF3)
Acknowledge: IMMEDIATELY
Cause: When switching on or in the switched-on state, the HF damping module does not return a ready signal.
Remedy: - Check the DRIVE-CLiQ wiring to the HF damping module.
- check the 24 V supply voltage.
- if required, replace the HF damping module.
Note:
HF Damping Module
Reaction upon A: NONE
Acknowl. upon A: NONE

© Siemens AG 2012 All Rights Reserved

F07810 Drive: Power unit EEPROM without rated data

Message value: -

Drive object: B_INF, VECTOR_G

Reaction: NONE

Acknowledge: IMMEDIATELY

Cause: No rated data are stored in the power unit EEPROM.
See also: p0205 (Power unit application), r0206 (Rated power unit power), r0207 (Rated power unit current), r0208 (Rated power unit line supply voltage), r0209 (Power unit, maximum current)

Remedy: Replace the power unit or inform Siemens Customer Service.

F07815 Drive: Power unit has been changed

Message value: Parameter: %1

Drive object: B_INF

Reaction: NONE

Acknowledge: IMMEDIATELY

Cause: The code number of the actual power unit does not match the saved number. This only occurs if the comparator in p9906 or p9908 is not at 2 (low) or 3 (minimum).
Fault value (r0949, interpret decimal):
Number of the incorrect parameter.
See also: r0200 (Power unit code number actual), p0201 (Power unit code number)

Remedy: Connect the original power unit and power up the Control Unit again (POWER ON) or set p0201 to r0200 and exit commissioning with p0010 = 0.
For infeeds, the following applies:
Line reactors or line filters must be used that are specified for the new power unit. A line supply and DC link identification routine (p3410 = 5) must then be carried out. It is not possible to change the power unit without re-commissioning the system if the type of infeed (A_Infeed, B_Infeed, S_Infeed), the type of construction/design (booksize, chassis) or the voltage class differ between the old and new power units.
For inverters, the following applies:
If the new power unit is accepted, then if required, the current limit (p0640) can be reduced by a lower maximum current of the power unit (r0209) (torque limits stay the same).
If not only the power unit is changed, but also the motor, then the motor must be re-commissioned (e.g. using p0010 = 1). This is also necessary if motor data is still to be downloaded via DRIVE-CLiQ.
See also: r0200 (Power unit code number actual)

F07815 Drive: Power unit has been changed

Message value: Parameter: %1

Drive object: VECTOR_G

Reaction: NONE

Acknowledge: IMMEDIATELY

Cause: The code number of the actual power unit does not match the saved number. This only occurs if the comparator in p9906 or p9908 is not at 2 (low) or 3 (minimum).
Fault value (r0949, interpret decimal):
Number of the incorrect parameter.
See also: r0200 (Power unit code number actual), p0201 (Power unit code number)

Remedy: - Connect the original power unit and switch on the Control Unit again (POWER ON).
- Set p0201 to r0200 and exit commissioning with p0010 = 0.
Note:
If the power unit type was changed (see r0203) or the motor replaced, then the motor must be recommissioned (e.g. using p0010 = 1, p3900 = 3, p1900 = 1, 2). This is also necessary if motor data is still to be downloaded via DRIVE-CLiQ.
If the new power unit is accepted, then if required, the current limit p0640 can be reduced by a lower maximum current of the power unit (r0209) (torque limits stay the same).
If the comparison stage in p9906 is set to 2, 3, then commissioning can be exited (p0010 = 0) and the fault acknowledged. This procedure is not recommended for different power unit types.
See also: r0200 (Power unit code number actual)

© Siemens AG 2012 All Rights Reserved

A07820 Drive: Temperature sensor not connected

Message value: %1
Drive object: VECTOR_G
Reaction: NONE
Acknowledge: NONE
Cause: The temperature sensor for monitoring the motor temperature, specified in p0600, is not available.
Alarm value (r2124, interpret decimal):
1: p0601 = 10 (SME), but in p0600 - not evaluated via encoder is selected.
2: p0600 = 10 (BICO), but the signal source (p0603) is not interconnected.
3: p0601 = 11 (BICO), but in p0600 - not evaluated via BICO interconnection is selected (20 or 21).
4: p0601 = 11 (BICO) and p4610-p4613 > 0, but the associated signal source (p0608, p0609) is not interconnected.
5: Component with sensor evaluation not present or has been removed in the meantime.
6: Evaluation via Motor Module not possible (r0192.21).
Remedy: Re alarm value = 1:
- In p0600 set an encoder with temperature sensor.
Re alarm value = 2:
- interconnect p0603 with the temperature signal.
Re alarm value = 3, 4:
- set the available temperature sensor (p0600, p0601).
- set p4610 ... p4613 = 0 (no sensor), or interconnect p0608 or p0609 with an external temperature signal.
Re alarm value = 5:
- connect the component with the temperature sensor. Check the DRIVE-CLiQ connection.
Re alarm value = 6:
- update the Motor Module firmware. Connect temperature sensor via encoder.
See also: p0600 (Motor temperature sensor for monitoring), p0601

A07825 (N) Drive: Simulation mode activated

Message value: -
Drive object: VECTOR_G
Reaction: NONE
Acknowledge: NONE
Cause: The simulation mode is activated.
The drive can only be powered up if the DC link voltage is less than 40 V.
Remedy: Not necessary.
The alarm automatically disappears if simulation mode is de-activated with p1272 = 0.
Reaction upon N: NONE
Acknowl. upon N: NONE

F07826 Drive: DC link voltage for simulation operation too high

Message value: -
Drive object: VECTOR_G
Reaction: OFF2
Acknowledge: IMMEDIATELY
Cause: The simulation mode is activated and the DC link voltage is greater than the permissible value of 40 V.
Remedy: - switch out (disable) simulation mode (p1272 = 0) and acknowledge the fault.
- reduce the input voltage in order to reach a DC link voltage below 40 V.

F07840 Drive: Infeed operation missing

Message value: -
Drive object: VECTOR_G
Reaction: OFF2 (NONE)
Acknowledge: IMMEDIATELY
Cause: The signal "infeed operation" is not present although the enable signals for the drive have been present for longer than the parameterized monitoring time (p0857).
- infeed not operational.
- interconnection of the binector input for the ready signal is either incorrect or missing (p0864).
- infeed is presently carrying out a line supply identification routine.

© Siemens AG 2012 All Rights Reserved

Remedy: - bring the infeed into an operational state.
- check the interconnection of the binector input for the signal "infeed operation" (p0864).
- increase the monitoring time (p0857).
- wait until the infeed has completed the line supply identification routine.
See also: p0857 (Power unit monitoring time), p0864 (Infeed operation)

F07841 (A) Drive: Infeed operation withdrawn

Message value: -
Drive object: VECTOR_G
Reaction: OFF2 (NONE, OFF1, OFF3)
Acknowledge: IMMEDIATELY
Cause: The signal "infeed operation" was withdrawn in operation.
- interconnection of the binector input for the signal "infeed operation" is either incorrect or missing (p0864).
- the enable signals of the infeed were disabled.
- due to a fault, the infeed withdraws the signal "infeed operation".

Remedy: - check the interconnection of the binector input for the "infeed operation" signal (p0864).
- check the enable signals of the infeed and if required, enable.
- remove and acknowledge an infeed fault.
Note:
If this drive is intended to back up the DC link regeneratively, then the fault response must be parameterized for NONE, OFF1 or OFF3. so that the drive can continue to operate even after the infeed fails.

Reaction upon A: NONE
Acknowl. upon A: NONE

A07850 (F) External alarm 1

Message value: -
Drive object: All objects
Reaction: NONE
Acknowledge: NONE
Cause: The BICO signal for "external alarm 1" was triggered.
The condition for this external alarm is fulfilled.
See also: p2112 (External alarm 1)
Remedy: Eliminate the causes of this alarm.
Reaction upon F: Infeed: NONE (OFF1, OFF2)
Vector: NONE (IASC/DCBRAKE, OFF1, OFF2, OFF3, STOP1, STOP2)
Acknowl. upon F: IMMEDIATELY (POWER ON)

A07851 (F) External alarm 2

Message value: -
Drive object: All objects
Reaction: NONE
Acknowledge: NONE
Cause: The BICO signal for "external alarm 2" was triggered.
The condition for this external alarm is fulfilled.
See also: p2116 (External alarm 2)
Remedy: Eliminate the causes of this alarm.
Reaction upon F: Infeed: NONE (OFF1, OFF2)
Vector: NONE (IASC/DCBRAKE, OFF1, OFF2, OFF3, STOP1, STOP2)
Acknowl. upon F: IMMEDIATELY (POWER ON)

© Siemens AG 2012 All Rights Reserved

A07852 (F) External alarm 3

Message value: -
Drive object: All objects
Reaction: NONE
Acknowledge: NONE
Cause: The BICO signal for "external alarm 3" was triggered.
The condition for this external alarm is fulfilled.
See also: p2117 (External alarm 3)
Remedy: Eliminate the causes of this alarm.
Reaction upon F: Infeed: NONE (OFF1, OFF2)
Vector: NONE (IASC/DCBRAKE, OFF1, OFF2, OFF3, STOP1, STOP2)
Acknowl. upon F: IMMEDIATELY (POWER ON)

F07860 (A) External fault 1

Message value: -
Drive object: All objects
Reaction: Infeed: OFF2 (NONE, OFF1)
Vector: OFF2 (IASC/DCBRAKE, NONE, OFF1, OFF3, STOP1, STOP2)
Acknowledge: IMMEDIATELY (POWER ON)
Cause: The BICO signal "external fault 1" was triggered.
See also: p2106 (External fault 1)
Remedy: Eliminate the causes of this fault.
Reaction upon A: NONE
Acknowl. upon A: NONE

F07861 (A) External fault 2

Message value: -
Drive object: All objects
Reaction: Infeed: OFF2 (NONE, OFF1)
Vector: OFF2 (IASC/DCBRAKE, NONE, OFF1, OFF3, STOP1, STOP2)
Acknowledge: IMMEDIATELY (POWER ON)
Cause: The BICO signal "external fault 2" was triggered.
See also: p2107 (External fault 2)
Remedy: Eliminate the causes of this fault.
Reaction upon A: NONE
Acknowl. upon A: NONE

F07862 (A) External fault 3

Message value: -
Drive object: All objects
Reaction: Infeed: OFF2 (NONE, OFF1)
Vector: OFF2 (IASC/DCBRAKE, NONE, OFF1, OFF3, STOP1, STOP2)
Acknowledge: IMMEDIATELY (POWER ON)
Cause: The BICO signal "external fault 3" was triggered.
See also: p2108, p3111, p3112
Remedy: Eliminate the causes of this fault.
Reaction upon A: NONE
Acknowl. upon A: NONE

© Siemens AG 2012 All Rights Reserved

F07890 Internal voltage protection / internal armature short-circuit with STO active

Message value: -

Drive object: VECTOR_G

Reaction: OFF2

Acknowledge: IMMEDIATELY

Cause: The internal armature short-circuit (p1231 = 4) is not possible as Safe Torque Off (STO) is enabled. The pulses cannot be enabled.

Remedy: Switch out the internal armature short-circuit (p1231=0) or de-activate Safe Torque Off (p9501 = p9561 = 0).
Note:
STO: Safe Torque Off / SH: Safe standstill

A07899 (N) Drive: Stall monitoring not possible

Message value: Parameter: %1

Drive object: VECTOR_G

Reaction: NONE

Acknowledge: NONE

Cause: Stall monitoring is not possible, because a change was made into the open-loop speed controlled mode before the wait time p2177 had expired.
This situation can only occur, if the following conditions apply:
p1300 = 20
p2177 > p1758
p1750.2 = 0
p1750.6 = 0

Remedy: - Deactivate the changeover into open-loop speed controlled operation when operating at the torque limit (p1750.6 = 0).
Condition:
No slow reversing through the open-loop speed controlled operating range p1755 within the time p1758 when operating at the torque limit.
- shorten the stall detection wait time (p2177 < p1758).
- Activate closed-loop controlled operation from standstill and higher (p1750.2 = 1).
Condition:
There is no active load, for example, a hoisting gear
- Use an operating mode with encoder (p1300 = 21).

Reaction upon N: NONE

Acknowl. upon N: NONE

F07900 (N, A) Drive: Motor blocked

Message value: -

Drive object: VECTOR_G

Reaction: OFF2 (NONE, OFF1, OFF3, STOP1, STOP2)

Acknowledge: IMMEDIATELY

Cause: Motor has been operating at the torque limit longer than the time specified in p2177 and below the speed threshold in p2175.
This signal can also be initiated if the speed actual value is oscillating and the speed controller output repeatedly goes to its limit.
If the simulation mode is enabled (p1272 = 1) and the closed-loop control with speed encoder activated (p1300 = 21), then the inhibit signal is generated if the encoder signal is not received from a motor that is driven with the torque setpoint of the closed-loop control.
See also: p2175 (Motor blocked speed threshold), p2177 (Motor blocked delay time)

Remedy: - check that the motor can freely move.
- check the torque limit: For a positive direction of rotation r1538, for a negative direction of rotation r1539.
- check the parameter, message "Motor blocked" and if required, correct (p2175, p2177).
- check the inversion of the actual value (p0410).
- check the motor encoder connection.
- check the encoder pulse number (p0408).
- for SERVO with encoderless operation and motors with low power ratings (< 300 W), increase the pulse frequency (p1800).
- after de-selecting the "Basic positioner" (EPOS) function mode, check the motoring (p1528) and regenerative (p1529) torque limit and modify again.

© Siemens AG 2012 All Rights Reserved

- in the simulation mode and operation with speed encoder, the power unit to which the motor is connected must be powered up and must be supplied with the torque setpoint of the simulated closed-loop control. Otherwise, change over to encoderless control (see p1300).

Reaction upon N: NONE
Acknowl. upon N: NONE
Reaction upon A: NONE
Acknowl. upon A: NONE

F07901 Drive: Motor overspeed

Message value: -
Drive object: VECTOR_G
Reaction: OFF2 (IASC/DCBRAKE)
Acknowledge: IMMEDIATELY
Cause: The maximum permissible speed was either positively or negatively exceeded.
The maximum permissible positive speed is formed as follows: Minimum (p1082, CI: p1085) + p2162
The maximum permissible negative speed is formed as follows: Maximum (-p1082, CI: 1088) - p2162
Remedy: The following applies for a positive direction of rotation:
- check r1084 and if required, correct p1082, CI:p1085 and p2162.
The following applies for a negative direction of rotation:
- check r1087 and if required, correct p1082, CI:p1088 and p2162.
Activate pre-control of the speed limiting controller (p1401.7 = 1).
Increase the hysteresis for the overspeed signal p2162. This upper limit is dependent upon the maximum motor speed p0322 and the maximum speed p1082 of the setpoint channel.

F07902 (N, A) Drive: Motor stalled

Message value: %1
Drive object: VECTOR_G
Reaction: OFF2 (IASC/DCBRAKE, NONE, OFF1, OFF3, STOP1, STOP2)
Acknowledge: IMMEDIATELY
Cause: The system has identified that the motor has stalled for a time longer than is set in p2178.
Fault value (r0949, interpret decimal):
1: Stall detection using r1408.11 (p1744 or p0492).
2: Stall detection using r1408.12 (p1745).
3: Stall detection using r0056.11 (only for separately excited synchronous motors).
See also: p1744 (Motor model speed threshold stall detection), p2178 (Motor stalled delay time)
Remedy: It should always be carefully ensured that the motor data identification (p1910) as well as the rotating measurement (p1960) were carried out (also refer to r3925). For synchronous motors with encoder, the encoder must have been adjusted (p1990).
For closed-loop speed and torque control with speed encoder, the following applies:
- check the speed signal (interrupted cable, polarity, pulse number, broken encoder shaft).
- check the speed encoder, if another speed encoder was selected using the data set changeover. This must be connected to the same motor that is controlled for the data set changeover.
If there is no fault, then the fault tolerance (p1744 or p0492) can be increased. For resolvers with a high signal ripple, for example p0492 should be increased and the speed signal smoothed (p1441, p1442).
If the stalled motor should take place in the range of the monitor model and for speeds of less than 30 % of the rated motor speed, then a change can be made directly from the current model into the flux impression (p1401.5 = 1). We therefore recommend that the time-controlled model change is switched in (p1750.4 = 1) or the model changeover limits are significantly increased (p1752 > 0.35 x p0311; p1753 = 5 %).
- check the speed encoder, if another speed encoder was selected using the data set changeover. This must be connected to the motor that is controlled for the data set changeover.
For closed-loop speed and torque control without speed encoder, the following applies:
- Check whether the drive stalls solely due to the load in controlled mode (r1750.0) or when the speed setpoint is still zero. If so, increase the current setpoint via p1610 or set p1750.2 = 1 (sensorless vector control to standstill for passive loads).
- If the motor excitation time (p0346) was significantly reduced and the drive stalls when it is switched on and run immediately, p0346 should be increased again or quick magnetizing selected (p1401).
- check the current limits (p0640, r0067, r0289). If the current limits are too low, then the drive cannot be magnetized.
- check the current controller (p1715, p1717) and the speed adaptation controller (p1764, p1767). If the dynamic response was significantly reduced, then this should be increased again.
- If there is no fault, then the fault tolerance (p1745) or the delay time (p2178) can be increased.

© Siemens AG 2012 All Rights Reserved

The following generally apply for closed-loop and torque control:
- Check whether the motor cables are disconnected.
- If the fault occurs with fault value 2 when the motor accelerates very quickly to the field weakening range, the deviation between the flux setpoint and flux actual value can be reduced and, in turn, the message prevented, by reducing p1596.

For separately-excited synchronous motors (closed-loop control with speed encoder), the following applies:
- check the speed signal (interrupted cable, polarity, pulse number).
- ensure the correct motor parameterization (rating plate and equivalent circuit diagram parameters).
- check the excitation equipment and the interface to the closed-loop control.
- encoder the highest possible dynamic response of the closed-loop excitation current control.
- check the speed control for any tendency to oscillate and if resonance effects occur, use a bandstop filter.
- do not exceed the maximum speed (p2162).

If there is no fault, then the delay time can be increased (p2178).

Reaction upon N: NONE
Acknowl. upon N: NONE
Reaction upon A: NONE
Acknowl. upon A: NONE

A07903 Drive: Motor speed deviation

Message value: -
Drive object: VECTOR_G
Reaction: NONE
Acknowledge: NONE
Cause: The absolute value of the speed difference from the two setpoints (p2151, p2154) and the speed actual value (r2169) exceeds the tolerance threshold (p2163) longer than tolerated (p2164, p2166).
The alarm is only enabled for p2149.0 = 1.
Possible causes could be:
- the load torque is greater than the torque setpoint.
- when accelerating, the torque/current/power limit is reached. If the limits are not sufficient, then it is possible that the drive has been dimensioned too small.
- for closed-loop torque control, the speed setpoint does not track the speed actual value.
- for active Vdc controller.

For U/f control, the overload condition is detected as the Imax controller is active.
See also: p2149 (Monitoring configuration)

Remedy:
- increase p2163 and/or p2166.
- increase the torque/current/power limits.
- for closed-loop torque control: The speed setpoint should track the speed actual value.
- de-activate alarm with p2149.0 = 0.

A07904 (N) External armature short-circuit: Contactor feedback signal "Closed" missing

Message value: -
Drive object: B_INF, VECTOR_G
Reaction: NONE
Acknowledge: NONE
Cause: When closing, the contactor feedback signal (p1235) did not issue the signal "Closed" (r1239.1 = 1) within the monitoring time (p1236).
Remedy:
- check that the contactor feedback signal is correctly connected (p1235).
- check the logic of the contactor feedback signal (r1239.1 = 1: "Closed", r1239.1 = 0: "Open").
- increase the monitoring time (p1236).
- if required, set the external armature short-circuit without contactor feedback signal (p1231 = 2).

Reaction upon N: NONE
Acknowl. upon N: NONE

© Siemens AG 2012 All Rights Reserved

F07905 (N, A) External armature short-circuit: Contactor feedback signal "Open" missing

Message value: -

Drive object: B_INF, VECTOR_G

Reaction: OFF2 (NONE)

Acknowledge: IMMEDIATELY

Cause: When opening, the contactor feedback signal (p1235) did not issue the signal "Open" (r1239.1 = 0) within the monitoring time (p1236).

Remedy: - check that the contactor feedback signal is correctly connected (p1235).
- check the logic of the contactor feedback signal (r1239.1 = 1: "Closed", r1239.1 = 0: "Open").
- increase the monitoring time (p1236).
- if required, set the external armature short-circuit without contactor feedback signal (p1231 = 2).

Reaction upon N: NONE

Acknowl. upon N: NONE

Reaction upon A: NONE

Acknowl. upon A: NONE

F07906 Armature short-circuit / internal voltage protection: Parameterization error

Message value: Fault cause: %1, motor data set: %2

Drive object: VECTOR_G

Reaction: OFF2

Acknowledge: IMMEDIATELY

Cause: The armature short-circuit is incorrectly parameterized.
Fault value (r0949, interpret decimal):
zzzzyyxx: zzzz = fault cause, xx = motor data set
zzzz = 0001 hex = 1 dec:
A permanent-magnet synchronous motor has not been selected.
zzzz = 0002 hex = 2 dec:
No induction motor selected.
zzzz = 0065 hex = 101 dec:
External armature short-circuit: Output (r1239.0) not wired.
zzzz = 0066 hex = 102 dec:
External armature short-circuit with contactor feedback signal: No feedback signal connected (BI:p1235).
zzzz = 0067 hex = 103 dec:
External armature short-circuit without contactor feedback signal: Wait time when opening (p1237) is 0.
zzzz = 00C9 hex = 201 dec:
Internal voltage protection: The maximum output current of the Motor Module (r0209) is less than 1.8 x motor short-circuit current (r0331).
zzzz = 00CA hex = 202 dec:
Internal voltage protection: A Motor Module in booksize or chassis format is not being used.
zzzz = 00CB hex = 203 dec:
Internal voltage protection: The motor short-circuit current (p0320) is greater than the maximum motor current (p0323).
zzzz = 00CC hex = 204 dec:
Internal voltage protection: The activation (p1231 = 4) is not given for all motor data sets with synchronous motors (p0300 = 2xx, 4xx).

Remedy: For fault value = 1:
- an armature short-circuit / voltage protection is only permissible for permanent-magnetic synchronous motors. The highest position of the motor type in p0300 must either be 2 or 4.
For fault value = 101:
- the contactor for the external armature short-circuit configuration should be controlled using output signal r1239.0. The signal can, e.g. be connected to an output terminal via binector input p0738. Before this fault can be acknowledged, p1231 must be set again.
For fault value = 102:
- if the external armature short-circuit with contactor feedback signal (p1231 = 1) is selected, this feedback signal must be connected to an input terminal (e.g. r722.x) and then connected to BI: p1235.
- alternatively, the external armature short-circuit without contactor feedback signal (p1231 = 2) can be selected.
For fault value = 103:
- if the external armature short-circuit without contactor feedback signal (p1231 = 2) is selected, then a delay time must be parameterized in p1237. This time must always be greater than the actual contactor opening time, as otherwise the Motor Module would be short-circuited!

© Siemens AG 2012 All Rights Reserved

For fault value = 201:
- a Motor Module with a higher maximum current or a motor with a lower short-circuit current must be used. The maximum Motor Module current must be higher than 1.8 x short-circuit current of the motor.
For fault value = 202:
- for internal voltage protection, use a Motor Module in booksize or chassis format.
For fault value = 203:
- for internal voltage protection, only use short-circuit proof motors.
For fault value = 204:
- The internal voltage protection must either be activated for all motor data sets with synchronous motors (p0300 = 2xx, 4xx) (p1231 = 3) or it must be de-activated for all motor data sets (p1231 not equal to 3). This therefore ensures that the protection cannot be accidentally withdrawn as a result of a data set changeover. The fault can only be acknowledged if this condition is fulfilled.

F07907 Internal armature short-circuit: Motor terminals are not at zero potential after pulse suppression

Message value: -

Drive object: VECTOR_G

Reaction: NONE

Acknowledge: IMMEDIATELY

Cause: The function "Internal voltage protection" (p1231 = 3) was activated.
The following must be observed:
- when the internal voltage protection is active, after pulse suppression, all of the motor terminals are at half of the DC link voltage (without an internal voltage protection, the motor terminals are at zero potential)!
- it is only permissible to use motors that are short-circuit proof (p0320 < p0323).
- the Motor Module must be able to continually conduct 180% short-circuit current (r0331) of the motor (r0289).
- the internal voltage protection cannot be interrupted due to a fault response. If an overcurrent condition occurs during the active, internal voltage protection, then this can destroy the Motor Module and/or the motor.
- if the Motor Module does not support the autonomous, internal voltage protection (r0192.10 = 0), in order to ensure safe, reliable functioning when the line supply fails, an external 24 V power supply (UPS) must be used for the components.
- if the Motor Module does support the autonomous, internal voltage protection (r0192.10 = 1), in order to ensure safe, reliable functioning when the line supply fails, the 24 V power supply for the components must be provided through a Control Supply Module.
- if the internal voltage protection is active, it is not permissible that the motor is driven by the load for a longer period of time (e.g. as a result of loads that move the motor or another coupled motor).

Remedy: Not necessary.
This a note for the user.

A07908 Internal armature short-circuit active

Message value: -

Drive object: VECTOR_G

Reaction: NONE

Acknowledge: NONE

Cause: The Motor Module signals that the motor is short-circuited through the power semiconductors (r1239.5 = 1). The pulses cannot be enabled. The internal armature short-circuit is selected (p1231 = 4):

Remedy: For synchronous motors, the armature short-circuit braking is activated with binector input p1230 = 1 signal.
See also: p1230 (Armature short-circuit / DC braking activation), p1231 (Armature short-circuit / DC braking configuration)

F07909 Internal voltage protection: De-activation only effective after POWER ON

Message value: -

Drive object: VECTOR_G

Reaction: NONE

Acknowledge: POWER ON

Cause: The de-activation of the internal voltage protection (p1231 not equal to 3) only becomes effective after POWER ON.
The status signal r1239.6 = 1 indicates that the internal voltage protection is ready.

Remedy: Not necessary.
This a note for the user.

© Siemens AG 2012 All Rights Reserved

A07910 (N) Drive: Motor overtemperature

Message value: %1
Drive object: VECTOR_G
Reaction: NONE
Acknowledge: NONE
Cause: KTY or no sensor:
The measured motor temperature or temperature of motor temperature model 2 has exceeded the alarm threshold (p0604, p0616). The response parameterized in p0610 becomes active.
PTC or bimetallic NC contact:
The response threshold of 1650 Ohm was exceeded or the NC contact opened.
Alarm value (r2124, interpret decimal):
- SME not selected in p0601:
11: No output current reduction.
12: Output current reduction active.
- SME or TM120 selected in p0601 (p0601 = 10, 11):
this is the number of the temperature channel leading to the message.
See also: p0604 (Mot_temp_mod 1/KTY alarm threshold), p0610 (Motor overtemperature response)
Remedy: - check the motor load.
- check the motor ambient temperature and cooling.
- check PTC or bimetallic NC contact.
See also: p0612 (Mot_temp_mod activation), p0625 (Motor ambient temperature), p0626 (Motor overtemperature, stator core), p0627 (Motor overtemperature, stator winding), p0628 (Motor overtemperature rotor winding)
Reaction upon N: NONE
Acknowl. upon N: NONE

F07913 Excitation current outside the tolerance range

Message value: -
Drive object: VECTOR_G
Reaction: OFF2
Acknowledge: IMMEDIATELY
Cause: The difference between the excitation current actual value and setpoint has exceeded the tolerance:
abs(r1641 - r1626) > p3201 + p3202
The cause of this fault is again reset for abs(r1641 - r1626) < p3201.
Remedy: - check the parameterization (p1640, p3201, p3202).
- check the interfaces to the excitation equipment (r1626, p1640).
- check the excitation equipment.

F07914 Flux out of tolerance

Message value: -
Drive object: VECTOR_G
Reaction: OFF2
Acknowledge: IMMEDIATELY
Cause: The difference between the flux actual value and setpoint has exceeded the tolerance:
abs(r0084 - r1598) > p3204 + p3205
The cause of this fault is again reset for abs(r0084 - r1598) < p3204.
The fault is only issued after the delay time in p3206 has expired.
Remedy: - check the parameterization (p3204, p3205).
- check the interfaces to the excitation equipment (r1626, p1640).
- check the excitation equipment.
- check the flux control (p1590, p1592, p1597).
- check the control for oscillation and take the appropriate counter measures (e.g. optimize the speed control loop, parameterize a bandstop filter).

© Siemens AG 2012 All Rights Reserved

A07918 (N) Three-phase setpoint generator operation selected/active

Message value: -
Drive object: B_INF, VECTOR_G
Reaction: NONE
Acknowledge: NONE
Cause: Only for separately excited synchronous motors (p0300 = 5):
The actual open-loop/closed-loop control mode is I/f control (open-loop) with a fixed current (p1300 = 18).
The speed is entered via the setpoint channel and the current setpoint is given by the minimum current (p1620).
It must be ensured that in this mode, the control dynamic performance is very limited. This is the reason that longer ramp-up times should be set for the setpoint speed than for normal operation.
See also: p1620 (Stator current, minimum)
Remedy: Select another open-loop/closed-loop control mode
See also: p1300 (Open-loop/closed-loop control operating mode)
Reaction upon N: NONE
Acknowl. upon N: NONE

A07920 Drive: Torque/speed too low

Message value: -
Drive object: VECTOR_G
Reaction: NONE
Acknowledge: NONE
Cause: The torque deviates from the torque/speed envelope characteristic (too low).
See also: p2181 (Load monitoring response)
Remedy: - check the connection between the motor and load.
- adapt the parameterization corresponding to the load.

A07921 Drive: Torque/speed too high

Message value: -
Drive object: VECTOR_G
Reaction: NONE
Acknowledge: NONE
Cause: The torque deviates from the torque/speed envelope characteristic (too high).
Remedy: - check the connection between the motor and load.
- adapt the parameterization corresponding to the load.

A07922 Drive: Torque/speed out of tolerance

Message value: -
Drive object: VECTOR_G
Reaction: NONE
Acknowledge: NONE
Cause: The torque deviates from the torque/speed envelope characteristic.
Remedy: - check the connection between the motor and load.
- adapt the parameterization corresponding to the load.

F07923 Drive: Torque/speed too low

Message value: -
Drive object: VECTOR_G
Reaction: OFF1 (NONE, OFF2, OFF3)
Acknowledge: IMMEDIATELY
Cause: The torque deviates from the torque/speed envelope characteristic (too low).
Remedy: - check the connection between the motor and load.
- adapt the parameterization corresponding to the load.

© Siemens AG 2012 All Rights Reserved

F07924 Drive: Torque/speed too high

Message value: -
Drive object: VECTOR_G
Reaction: OFF1 (NONE, OFF2, OFF3)
Acknowledge: IMMEDIATELY
Cause: The torque deviates from the torque/speed envelope characteristic (too high).
Remedy: - check the connection between the motor and load.
- adapt the parameterization corresponding to the load.

F07925 Drive: Torque/speed out of tolerance

Message value: -
Drive object: VECTOR_G
Reaction: OFF1 (NONE, OFF2, OFF3)
Acknowledge: IMMEDIATELY
Cause: The torque deviates from the torque/speed envelope characteristic.
Remedy: - check the connection between the motor and load.
- adapt the parameterization corresponding to the load.

A07927 DC braking active

Message value: -
Drive object: VECTOR_G
Reaction: NONE
Acknowledge: NONE
Cause: The motor is braked with DC current. DC braking is active.
1)
A message with response DCBRK is active. The motor is braked with the braking current set in p1232 for the duration set in in p1233. If the standstill threshold p1226 is undershot, then braking is prematurely canceled.
2)
DC braking has been activated at binector input p1230 with the DC braking set (p1230 = 4). Braking current p1232 is injected until this binector input becomes inactive.
Remedy: Not necessary.
The alarm automatically disappears once DC braking has been executed.

F07928 Internal voltage protection initiated

Message value: -
Drive object: VECTOR_G
Reaction: OFF2
Acknowledge: IMMEDIATELY
Cause: The Motor Module signals that the motor is short-circuited through the power semiconductors (r1239.5 = 1). The pulses cannot be enabled. The internal voltage protection is selected (p1231 = 3).
Remedy: If the Motor Module supports the autonomous internal voltage protection (r0192.10 = 1), then the Motor Module automatically decides - using the DC link voltage - as to whether the armature short-circuit should be activated.
The armature short-circuit is activated and response OFF2 is initiated if the DC link voltage exceeds 800 V. If the DC link voltage falls below 450 V, then the armature short-circuit is withdrawn.
If the motor is still in a critical speed range, the armature short-circuit is re-activated once the DC link voltage exceeds the threshold of 800 V.
If the autonomous (independent) internal voltage protection is active (r1239.5 = 1) and the line supply returns (450 V < DC link voltage < 800 V), the armature short-circuit is withdrawn after 3 minutes.

F07930 Drive: Brake control error

Message value: %1
Drive object: VECTOR_G
Reaction: OFF1 (NONE, OFF2, OFF3)
Acknowledge: IMMEDIATELY
Cause: The Control Unit has detected a brake control error.

© Siemens AG 2012 All Rights Reserved

Fault value (r0949, interpret decimal):
10, 11: Fault in "open holding brake" operation.
- No brake connected or wire breakage (check whether brake releases for p1278 = 1).
- Ground fault in brake cable.
20: Fault in "brake open" state.
- Short-circuit in brake winding.
30, 31: Fault in "close holding brake" operation.
- No brake connected or wire breakage (check whether brake releases for p1278 = 1).
- Short-circuit in brake winding.
40: Fault in "brake closed" state.
50: Fault in the brake control circuit of the Control Unit or communication fault between Control Unit and Motor Module (brake control diagnostics).
80: When using the Safe Brake Adaptor (SBA), a fault has occurred in the brake control of the Control Unit.
90: Brake released for service purposes (X4).
Note:
The following causes may apply to fault values:
- motor cable is not shielded correctly.
- defect in control circuit of the Motor Module.
See also: p1278 (Brake control, diagnostics evaluation)

Remedy:
- check the motor holding brake connection.
- for a parallel connection, check the setting of the power unit data set to control the holding brake (p7015).
- check the function of the motor holding brake.
- check whether there is a DRIVE-CLiQ communication error between the Control Unit and the Motor Module involved and, if required, carry out a diagnostics routine for the faults identified.
- check that the electrical cabinet design and cable routing are in compliance with EMC regulations (e.g. shield of the motor cable and brake conductors are connected with the shield connecting plate and the motor connectors are tightly screwed to the housing).
- replace the Motor Module involved.
Operation with Safe Brake Module:
- check the Safe Brake Modules connection.
- replace the Safe Brake Module.
Operation with Safe Brake Module (SBA):
- check the SBA connection and if required, replace the SBA.
See also: p1215 (Motor holding brake configuration), p1278 (Brake control, diagnostics evaluation)

A07931 (F, N) Brake does not open

Message value: -
Drive object: VECTOR_G
Reaction: NONE
Acknowledge: NONE
Cause: This alarm is output for r1229.4 = 1.
See also: p1216 (Motor holding brake, opening time), r1229 (Motor holding brake status word)
Remedy:
- check the functionality of the motor holding brake.
- check the feedback signal (p1223).

Reaction upon F: NONE (OFF1, OFF2, OFF3)
Acknowl. upon F: IMMEDIATELY
Reaction upon N: NONE
Acknowl. upon N: NONE

A07932 Brake does not close

Message value: -
Drive object: VECTOR_G
Reaction: NONE
Acknowledge: NONE
Cause: This alarm is output for r1229.5 = 1.
For r1229.5 = 1, OFF1/OFF3 are suppressed to prevent the drive accelerating by a load that drives the motor - whereby OFF2 remains effective.
See also: p1217 (Motor holding brake closing time), r1229 (Motor holding brake status word)
Remedy:
- check the functionality of the motor holding brake.
- check the feedback signal (p1222).

© Siemens AG 2012 All Rights Reserved

F07934 (N) Drive: S120 Combi motor holding brake configuration

Message value: %1

Drive object: VECTOR_G

Reaction: NONE (OFF1, OFF2, OFF3)

Acknowledge: IMMEDIATELY (POWER ON)

Cause: A connected motor holding brake has been detected with an S120 Combi. However, this brake has not been assigned to just one Combi feed drive and, therefore, brake control is not configured (correctly). It is also not permitted to assign the brake to the spindle.
Fault value (r0949, interpret decimal):
0: No motor holding brake is assigned (p1215 = 0 or 3 on all S120 Combi feed drives).
1: More than one motor holding brake has been assigned (p1215 = 1 or 2 on more than one S120 Combi feed drive) - or there is more than one DRIVE-CLiQ motor with motor holding brake.
2: Brake was accidentally assigned to the spindle (p1215 = 1); this is not permitted.
3: An attempt was made to enable the function "Safe brake control" (SBC, p9602 = p9802 = 1) for the spindle. This is not permitted.

Remedy: Check whether the motor holding brake has been assigned to one S120 Combi feed drive exclusively (p1215 = 1 or 2) and not the spindle.
The fault will only be withdrawn once the motor holding brake has been assigned to just one of the S120 Combi feed drives and not the spindle (p1215 = 1 or 2 for this one drive). From this point, the motor holding brake will be controlled by this drive.
See also: p1215 (Motor holding brake configuration)

Reaction upon N: NONE

Acknowl. upon N: NONE

F07935 (N) Drive: Incorrect motor holding brake configuration

Message value: %1

Drive object: VECTOR_G

Reaction: NONE (OFF1, OFF2, OFF3)

Acknowledge: IMMEDIATELY

Cause: An incorrect motor holding brake configuration was detected.
Fault value (r0949, interpret decimal):
0:
A motor holding brake was detected where the brake control has not been configured (p1215 = 0).
The brake control configuration was set to "motor holding brake the same as sequence control" (p1215 = 1) (only when commissioning for the first time).
For a chassis unit with Safe Brake Adapter (SBA), the interconnection p9621 = r9872.3 was established (only when commissioning for the first time).
For a parallel connection, the power unit was set in p7015, to which the motor holding brake is connected (only when commissioning for the first time).
1:
A motor holding brake was detected where the brake control has not been configured (p1215 = 0).
The brake control configuration was left at "No motor holding brake available" (p1215 = 0).
11:
The identification had detected more than one motor holding brake for a parallel connection.
12:
For the parallel connection, in p0121 there is no valid component number for the power unit data set that is set in p7015.
13:
With the "Safe brake control" (SBC) function activated, an attempt was made to change the value in p7015.
14:
For a parallel connection, the power units set in p7015 cannot be addressed.

Remedy: For fault value = 0:
- No remedy required.
For fault value = 1:
- If required change the motor holding brake configuration (p1215 = 1, 2).
- If this fault value unexpectedly occurs, then the motor connections should be checked in order to rule out that they have been interchanged.
For fault value = 11:
For a parallel connection, only connect one motor holding brake.

© Siemens AG 2012 All Rights Reserved

For fault value = 12:
Check the setting of the power unit data set for a parallel connection (p7015).
For fault value = 13:
Before changing p7015, deactivate the "Safe brake control" function (SBC) (p9602).
For fault value = 14:
Check whether the power unit supports the brake control for a parallel connection (r9771.14).
Check whether there is a DRIVE-CLiQ communication error between the Control Unit and the power unit involved and, if required, carry out a diagnostics routine for the faults identified.
See also: p1215 (Motor holding brake configuration)

Reaction upon N: NONE
Acknowl. upon N: NONE

F07937 (N) Drive: Speed deviation between motor model and external speed

Message value: -
Drive object: VECTOR_G
Reaction: OFF2 (NONE, OFF1, OFF3)
Acknowledge: IMMEDIATELY
Cause: The absolute value of the speed difference from the two actual values (r2169, r1443) exceeds the tolerance threshold (p3236) for longer than permitted (p3238).
Possible causes:
- the interconnection or scaling of the external encoder signal is incorrect (p1440, p2000).
- speed encoder for external encoder signal faulty.
- encoder signal's polarity or gain incorrect.
- smoothing time constant for model speed for monitoring too high (p2157).
- smoothing time constant or threshold values for monitoring too low (p3236, p3238).
See also: p2149 (Monitoring configuration)

Remedy: - check that the external speed matches the motor speed (p1440, r1443).
- check the polarity of the external speed (r1443).
- check the interconnection of the connector input and the scaling of the signal (p1440, p2000).

Reaction upon N: NONE
Acknowl. upon N: NONE

F07940 Sync-line-drive: Synchronizing error

Message value: -
Drive object: VECTOR_G
Reaction: OFF2
Acknowledge: IMMEDIATELY
Cause: After synchronization has been completed, the phase difference (r3808) is greater than the threshold value, phase synchronism (p3813).
OFF1 or OFF3 response, while the closed-loop phase control is active (r3819.6 = 1) or synchronism reached (r3819.2 = 1).
Enable signal withdrawn (p3802 = 0), while the closed-loop phase control was active (r3819.6 = 1).

Remedy: If required increase the threshold value phase synchronism (p3813) for synchronizing the line supply to the drive.
Before OFF1 or OFF3, complete synchronizing (r03819.0 = 0).
Before withdrawing the enable signal (p3802 = 0), reach synchronism (r3819.2 = 1).
See also: p3813 (Sync-line-drive phase synchronism threshold value)

A07941 Sync-line-drive: Target frequency not permissible

Message value: Parameter: %1
Drive object: VECTOR_G
Reaction: NONE
Acknowledge: NONE
Cause: The target frequency is outside the permissible value range.
Alarm value (r2124, interpret decimal):
1084: Target frequency greater than the positive speed limit, f_sync > f_max (r1084).
1087: Target frequency less than the negative speed limit, f_sync < f_min (r1087).

Remedy: Fulfill the conditions for the target frequency for line-drive synchronization.
See also: r1084 (Speed limit positive effective), r1087 (Speed limit negative effective)

© Siemens AG 2012 All Rights Reserved

A07942 Sync-line-drive: Setpoint frequency is completely different than the target frequency

Message value: -
Drive object: VECTOR_G
Reaction: NONE
Acknowledge: NONE
Cause: There is a considerable difference between the setpoint frequency and the target frequency (f_set <> f_target). The deviation that can be tolerated is set in p3806.
Remedy: The alarm automatically disappears after the difference that can be tolerated between the setpoint and target frequencies (p3806) is reached.
See also: p3806 (Sync-line-drive frequency difference threshold value)

A07943 Sync-line-drive: Synchronization not permitted

Message value: Parameter: %1
Drive object: VECTOR_G
Reaction: NONE
Acknowledge: NONE
Cause: Synchronization is not permitted.
Alarm value (r2124, interpret decimal):
1300: The control mode (p1300) has not been set to encoderless closed-loop speed control or U/f characteristic.
1910: Motor data identification activated.
1960: Speed controller optimization activated.
1990: Encoder adjustment activated.
3801: Voltage Sensing Module (VSM) not found.
3845: Friction characteristic record activated.
Remedy: Fulfill the conditions for the line-drive synchronization.
Re alarm value = 1300:
Set the control mode (p1300) to encoderless closed-loop speed control (p1300 = 20) or U/f characteristic (p1300 = 0 ... 19).
Re alarm value = 1910:
Exit the motor data identification routine (p1910).
Re alarm value = 1960:
Exit the speed controller optimization routine (p1960).
Re alarm value = 1990:
Exit the encoder adjustment (p1990).
Re alarm value = 3801:
Connect the Voltage Sensing Module (VSM), assign it to the synchronizing drive (see p9910, p0151) and enter the drive object number of the synchronizing drive in p3801. When connecting the VSM to a neighboring drive object, ensure that the same current controller clock cycle p0115[0] exists as the one in the synchronizing drive.
Re alarm value = 3845:
Exit the friction characteristic record (p3845).

F07950 (A) Drive: Incorrect motor parameter

Message value: Parameter: %1
Drive object: VECTOR_G
Reaction: NONE
Acknowledge: IMMEDIATELY
Cause: - the motor parameters were incorrectly entered while commissioning (e.g. p0300 = 0, no motor)
- The braking resistor (p6811) has still not been parameterized - commissioning cannot be completed.
Fault value (r0949, interpret decimal):
Parameter number involved.
The following motor parameters can be incorrect for fault value 307:
p0304, p0305, p0307, p0308, p0309
See also: p0300, p0301, p0304, p0305, p0307, p0310, p0311, p0314, p0316, p0320, p0322, p0323
Remedy: Compare the motor data with the rating plate data and if required, correct.
See also: p0300, p0301, p0304, p0305, p0307, p0310, p0311, p0314, p0316, p0320, p0322, p0323
Reaction upon A: NONE
Acknowl. upon A: NONE

© Siemens AG 2012 All Rights Reserved

F07955 Drive: Motor has been changed

Message value: Parameter: %1

Drive object: VECTOR_G

Reaction: NONE

Acknowledge: IMMEDIATELY

Cause: The code number of the actual motor with DRIVE-CLiQ does not match the saved number.
Fault value (r0949, interpret decimal):
Number of the incorrect parameter.
See also: p0301 (Motor code number selection), r0302 (Motor code number of motor with DRIVE-CLiQ)

Remedy: Connect the original motor, power up the Control Unit again (POWER ON) and exit quick commissioning with p0010 = 0.
Or set p0300 = 10000 (load the parameters from the motor with DRIVE-CLiQ) and re-commission.
Quick commissioning (p0010 = 1) is automatically exited with p3900 > 0.
If quick commissioning was exited with p0010 = 0, then an automatic controller calculation (p0340 = 1) is not carried out.

F07956 (A) Drive: Motor code does not match the list (catalog) motor

Message value: %1

Drive object: VECTOR_G

Reaction: NONE

Acknowledge: IMMEDIATELY

Cause: The motor code of the connected motor with DRIVE-CLiQ does not match the possible list motor types (see selection in p0300).
The connected motor with DRIVE-CLiQ might not be supported by this firmware version.
Fault value (r0949, interpret decimal):
Motor code of the connected motor with DRIVE-CLiQ.
Note:
The first three digits of the motor code generally correspond to the list motor type.

Remedy: Use a motor with DRIVE-CLiQ and the matching motor code.

Reaction upon A: NONE

Acknowl. upon A: NONE

A07960 Drive: Incorrect friction characteristic

Message value: Parameter: %1

Drive object: VECTOR_G

Reaction: NONE

Acknowledge: NONE

Cause: The friction characteristic is incorrect.
Alarm value (r2124, interpret decimal):
1538:
The friction torque is greater than the maximum from the upper effective torque limit (p1538) and zero. This is the reason that the output of the friction characteristic (r3841) is limited to this value.
1539:
The friction torque is less than the minimum from the lower effective torque limit (p1539) and zero. This is the reason that the output of the friction characteristic (r3841) is limited to this value.
3820 ... 3829:
Incorrect parameter number. The speeds entered in the parameters for the friction characteristic do not correspond to the following condition:
0.0 < p3820 < p3821 < ... < p3829 <= p0322 or p1082, if p0322 = 0
Therefore the output of the friction characteristic (r3841) is set to zero.
3830 ... 3839:
Incorrect parameter number. The torques entered in the parameters for the friction characteristic do not correspond to the following condition:
0 <= p3830, p3831 ... p3839 <= p0333
Therefore the output of the friction characteristic (r3841) is set to zero.
See also: r3840 (Friction characteristic, status word)

Remedy: Fulfill the conditions for the friction characteristic.
Re alarm value = 1538:
Check the upper effective torque limit (e.g. in the field weakening range).

© Siemens AG 2012 All Rights Reserved

Re alarm value = 1539:
Check the lower effective torque limit (e.g. in the field weakening range).
Re alarm value = 3820 ... 3839:
Fulfill the conditions to set the parameters of the friction characteristic.
If the motor data (e.g. the maximum speed p0322) are changed during commissioning (p0010 = 1, 3), then the technological limits and threshold values, dependent on this, must be re-calculated by selecting p0340= 5).

A07961 Drive: Friction characteristic record activated

Message value: -

Drive object: VECTOR_G

Reaction: NONE

Acknowledge: NONE

Cause: The automatic friction characteristic record is activated.
The friction characteristic is recorded at the next power-on command.

Remedy: Not necessary.
The alarm disappears automatically after the friction characteristic record has been successfully completed or the record is de-activated (p3845 = 0).

F07963 Drive: Friction characteristic record interrupted

Message value: Parameter: %1

Drive object: VECTOR_G

Reaction: OFF1

Acknowledge: IMMEDIATELY

Cause: The conditions to record the friction characteristic are not fulfilled.
Fault value (r0949, interpret decimal):
0046: Missing enable signals (r0046).
1082: The highest speed value to be approached (p3829) is greater than the maximum speed (p1082).
1084: The highest speed value to be approached (p3829) is greater than the maximum speed (r1084, p1083, p1085).
1087: The highest speed value to be approached (p3829) is greater than the maximum speed (r1087, p1086, p1088).
1110: Friction characteristic record, negative direction selected (p3845) and negative direction inhibited (p1110).
1111: Friction characteristic record, positive direction selected (p3845) and positive direction inhibited (p1111).
1198: Friction characteristic record selected (p3845 > 0) and negative (p1110) and positive directions (p1111) inhibited (r1198).
1300: The control mode (p1300) has not been set to closed-loop speed control.
1755: For encoderless closed-loop control (p1300 = 20), the lowest speed value to be approached (p3820) is less than or equal to the changeover speed, open-loop controlled operation (p1755).
1910: Motor data identification activated.
1960: Speed controller optimization activated.
3820 ... 3829: Speed (p382x) cannot be approached.
3840: Friction characteristic incorrect.
3845: Friction characteristic record de-selected.

Remedy: Fulfill the conditions to record the friction characteristic.
Re fault value = 0046:
- establish missing enable signals.
Re fault value = 1082, 1084, 1087:
- Select the highest speed value to be approached (p3829) less than or equal to the maximum speed (p1082, r1084, r1087).
- Re-calculate the speed points along the friction characteristic (p0340 = 5).
For fault value = 1110:
- Select the friction characteristic record, positive direction (p3845).
For fault value = 1111:
- Select the friction characteristic record, negative direction (p3845).
For fault value = 1198:
- Enable the permitted direction (p1110, p1111, r1198).
For fault value = 1300:
- Set the control mode (p1300) on the closed-loop speed control (p1300 = 20, 21).
For fault value = 1755:
- For encoderless closed-loop speed control (p1300 = 20) select the lowest speed value to be approached (p3820) greater than the changeover speed of open-loop controlled operation (p1755).
- Re-calculate the speed points along the friction characteristic (p0340 = 5).

© Siemens AG 2012 All Rights Reserved

For fault value = 1910:
- Exit the motor data identification routine (p1910).
For fault value = 1960:
- Exit the speed controller optimization routine (p1960).
Re fault value 3820 ... 3829:
- check the load at speed p382x.
- check the speed signal (r0063) for oscillation at speed p382x. Check the settings of the speed controller if applicable.
For fault value = 3840:
- Make the friction characteristic error-free (p3820 ... p3829, p3830 ... p3839, p3840).
For fault value = 3845:
- Activate the friction characteristic record (p3845).

F07967 Drive: Automatic encoder adjustment incorrect

Message value: %1

Drive object: VECTOR_G

Reaction: OFF2 (NONE, OFF1)

Acknowledge: IMMEDIATELY

Cause: A fault has occurred during the automatic encoder adjustment or the pole position identification.
Only for internal Siemens troubleshooting.

Remedy: Carry out a POWER ON.

F07968 Drive: Lq-Ld measurement incorrect

Message value: %1

Drive object: VECTOR_G

Reaction: OFF2

Acknowledge: IMMEDIATELY

Cause: A fault has occurred during the Lq-Ld measurement.
Fault value (r0949, interpret decimal):
10: Stage 1: The ratio between the measured current and zero current is too low.
12: Stage 1: The maximum current was exceeded.
15: Second harmonic too low.
16: Drive converter too small for the measuring technique.
17: Abort due to pulse inhibit.

Remedy: For fault value = 10:
Check whether the motor is correctly connected.
Replace the power unit involved.
De-activate technique (p1909).
For fault value = 12:
Check whether motor data have been correctly entered.
De-activate technique (p1909).
For fault value = 16:
De-activate technique (p1909).
For fault value = 17:
Repeat technique.

F07969 Drive: Incorrect pole position identification

Message value: %1

Drive object: VECTOR_G

Reaction: OFF2

Acknowledge: IMMEDIATELY

Cause: A fault has occurred during the pole position identification routine.
Fault value (r0949, interpret decimal):
1: Current controller limited
2: Motor shaft locked.
4: Encoder speed signal not plausible.
10: Stage 1: The ratio between the measured current and zero current is too low.
11: Stage 2: The ratio between the measured current and zero current is too low.
12: Stage 1: The maximum current was exceeded.
13: Stage 2: The maximum current was exceeded.

© Siemens AG 2012 All Rights Reserved

14: Current difference to determine the +d axis too low.
15: Second harmonic too low.
16: Drive converter too small for the measuring technique.
17: Abort due to pulse inhibit.
18: First harmonic too low.
20: Pole position identification requested with the motor shaft rotating and activated "flying restart" function.

Remedy: For fault value = 1:
Check whether the motor is correctly connected.
Check whether motor data have been correctly entered.
Replace the Motor Module involved.
For fault value = 2:
Open the motor holding brake (p1215 = 2) and bring the motor into a no-load condition.
For fault value = 4:
Check whether the encoder pulse number (p0408) and gearbox factor (p0432, p0433) are correct.
Check whether the motor pole pair number is correct (p0314).
For fault value = 10:
When selecting p1980 = 4: Increase the value for p0325.
When selecting p1980 = 1: Increase the value for p0329.
Check whether the motor is correctly connected.
Replace the Motor Module involved.
For fault value = 11:
Increase the value for p0329.
Check whether the motor is correctly connected.
Replace the Motor Module involved.
For fault value = 12:
When selecting p1980 = 4: Reduce the value for p0325.
When selecting p1980 = 1: Reduce the value for p0329.
Check whether motor data have been correctly entered.
For fault value = 13:
Reduce the value for p0329.
Check whether motor data have been correctly entered.
For fault value = 14:
Increase the value for p0329.
Motor not sufficiently anisotropic, change the technique (p1980 = 1 or 10).
For fault value = 15:
Increase the value for p0325.
Motor not sufficiently anisotropic, change the technique (p1980 = 1 or 10).
For fault value = 16:
De-activate technique (p1982).
For fault value = 17:
Repeat technique.
For fault value = 18:
Increase the value for p0329.
Saturation not sufficient, change the technique (p1980 = 10).
For fault value = 20:
Before carrying out a pole position identification routine ensure that the motor shaft is absolutely stationary (zero speed).

F07970 Drive: Automatic encoder adjustment incorrect

Message value: %1
Drive object: VECTOR_G
Reaction: OFF2 (NONE)
Acknowledge: IMMEDIATELY
Cause: A fault has occurred during the automatic encoder adjustment.
Fault value (r0949, interpret decimal):
1: Current controller limited
2: Motor shaft locked.
4: Encoder speed signal not plausible.
5: Deselect U/f (p1300) or deactivate encoder calibration (p1990).
10: Stage 1: The ratio between the measured current and zero current is too low.
11: Stage 2: The ratio between the measured current and zero current is too low.
12: Stage 1: The maximum current was exceeded.

© Siemens AG 2012 All Rights Reserved

13: Stage 2: The maximum current was exceeded.
14: Current difference to determine the +d axis too low.
15: Second harmonic too low.
16: Drive converter too small for the measuring technique.
17: Abort due to pulse inhibit.

Remedy: For fault value = 1:
Check whether the motor is correctly connected.
Check whether motor data have been correctly entered.
Replace the power unit involved.
For fault value = 2:
Open the motor holding brake (p1215 = 2) and bring the motor into a no-load condition.
For fault value = 4:
Check whether the speed actual value inversion is correct (p0410.0).
Check whether the motor is correctly connected.
Check whether the encoder pulse number (p0408) and gearbox factor (p0432, p0433) are correct.
Check whether the motor pole pair number is correct (p0314).
For fault value = 5:
Deselect U/f (p1300) or deactivate encoder calibration (p1990).
For fault value = 10:
Increase the value for p0325.
Check whether the motor is correctly connected.
Replace the power unit involved.
For fault value = 11:
Increase the value for p0329.
Check whether the motor is correctly connected.
Replace the power unit involved.
For fault value = 12:
Reduce the value for p0325.
Check whether motor data have been correctly entered.
For fault value = 13:
Reduce the value for p0329.
Check whether motor data have been correctly entered.
For fault value = 14:
Increase the value for p0329.
For fault value = 15:
Increase the value for p0325.
For fault value = 16:
De-activate technique (p1982).
For fault value = 17:
Repeat technique.

A07971 (N) Drive: Angular commutation offset determination activated

Message value: -

Drive object: VECTOR_G

Reaction: NONE

Acknowledge: NONE

Cause: The automatic determination of the angular commutation offset (encoder adjustment) is activated (p1990 = 1,3).
The automatic determination is carried out at the next power-on command.
See also: p1990 (Encoder adjustment, determine angular commutation offset)

Remedy: Not necessary.
The alarm automatically disappears after determination or for the setting p1990 = 0.

Reaction upon N: NONE

Acknowl. upon N: NONE

© Siemens AG 2012 All Rights Reserved

A07975 (N) Drive: Travel to the zero mark - setpoint input expected

Message value: -
Drive object: VECTOR_G
Reaction: NONE
Acknowledge: NONE
Cause: The zero mark must be evaluated in order to adjust the encoder.
It is expected that a speed or torque setpoint is entered.
See also: p1990 (Encoder adjustment, determine angular commutation offset)
Remedy: Not necessary.
The alarm disappears once the zero mark has been detected.
Reaction upon N: NONE
Acknowl. upon N: NONE

A07976 Drive: Fine encoder calibration activated

Message value: Parameter: %1
Drive object: VECTOR_G
Reaction: NONE
Acknowledge: NONE
Cause: The alarm indicates the phases of the fine encoder calibration using an alarm value.
Alarm value (interpret decimal):
1: Fine encoder calibration active.
2: Rotating measurement started (set the setpoint speed > 40 % rated motor speed)
3: Rotating measurement lies within the speed and torque range.
4: Rotating measurement successful: pulse inhibit can be initiated to accept the values.
5: Fine encoder calibration is calculated.
10: Speed too low, rotating measurement interrupted.
12: Torque too high, rotating measurement interrupted.
See also: p1905 (Parameter tuning selection)
Remedy: Re alarm value = 10:
Increase the speed.
Re alarm value = 12:
Bring the drive into a no-load condition.

A07980 Drive: Rotating measurement activated

Message value: -
Drive object: VECTOR_G
Reaction: NONE
Acknowledge: NONE
Cause: The rotating measurement (automatic speed controller optimization) is activated.
The rotating measurement is carried out at the next power-on command.
See also: p1960 (Rotating measurement selection)
Remedy: Not necessary.
The alarm disappears automatically after the speed controller optimization has been successfully completed or for the setting p1900 = 0.

A07981 Drive: Enable signals for the rotating measurement missing

Message value: -
Drive object: VECTOR_G
Reaction: NONE
Acknowledge: NONE
Cause: The rotating measurement cannot be started due to missing enable signals.
Remedy: - acknowledge faults that are present.
- establish missing enable signals.
See also: r0002, r0046

© Siemens AG 2012 All Rights Reserved

F07982 Drive: Rotating measurement encoder test

Message value: %1

Drive object: VECTOR_G

Reaction: OFF1 (NONE, OFF2)

Acknowledge: IMMEDIATELY

Cause: A fault has occurred during the encoder test.
Fault value (r0949, interpret decimal):
1: The speed did not reach a steady-state condition.
2: The speed setpoint was not able to be approached as the minimum limiting is active.
3: The speed setpoint was not able to be approached as the suppression (skip) bandwidth is active.
4: The speed setpoint was not able to be approached as the maximum limiting is active.
5: The encoder does not supply a signal.
6: Incorrect polarity.
7: Incorrect pulse number.
8: Noise in the encoder signal or speed controller unstable.
9: Voltage Sensing Module (VSM) incorrectly connected.

Remedy: For fault value = 1:
- check the motor parameters.
- carry out a motor data identification routine (p1910).
- if required, reduce the dynamic factor (p1967 < 25 %).
For fault value = 2:
- adapt the speed setpoint (p1965) or adapt the minimum limit (p1080).
For fault value = 3:
- adapt the speed setpoint (p1965) or suppression (skip) bandwidths (p1091 ... p1094, p1101).
For fault value = 4:
- adapt the speed setpoint (p1965) or maximum limit (p1082, p1083 and p1086).
For fault value = 5:
- check the encoder connection. If required, replace the encoder.
For fault value = 6:
- check the connection assignment of the encoder cable. Adapt the polarity (p0410).
For fault value = 7:
- adapt the pulse number (p0408).
For fault value = 8:
- check the encoder connection and encoder cable. It is possible that there is a problem associated with the ground connection.
- reduce the dynamic response of the speed controller (p1460, p1462 and p1470, p1472).
For fault value = 9:
- check the connections of the Voltage Sensing Module (VSM).
Note:
The encoder test can be switched out (disabled) using p1959.0.
See also: p1959 (Rotating measurement configuration)

F07983 Drive: Rotating measurement saturation characteristic

Message value: %1

Drive object: VECTOR_G

Reaction: OFF1 (NONE, OFF2)

Acknowledge: IMMEDIATELY

Cause: A fault has occurred while determining the saturation characteristic.
Fault value (r0949, interpret decimal):
1: The speed did not reach a steady-state condition.
2: The rotor flux did not reach a steady-state condition.
3: The adaptation circuit did not reach a steady-state condition.
4: The adaptation circuit was not enabled.
5: Field weakening active.
6: The speed setpoint was not able to be approached as the minimum limiting is active.
7: The speed setpoint was not able to be approached as the suppression (skip) bandwidth is active.
8: The speed setpoint was not able to be approached as the maximum limiting is active.
9: Several values of the determined saturation characteristic are not plausible.
10: Saturation characteristic could not be sensibly determined because load torque too high.

© Siemens AG 2012 All Rights Reserved

Remedy: For fault value = 1:
- the total drive moment of inertia is far higher than that of the motor (p0341, p0342).
De-select rotating measurement (p1960), enter the moment of inertia p0342, re-calculate the speed controller p0340 = 4 and repeat the measurement.
Re fault value = 1 ... 2:
- increase the measuring speed (p1961) and repeat the measurement.
Re fault value = 1 ... 4:
- check the motor parameters (rating plate data). After the change: Calculate p0340 = 3.
- check the moment of inertia (p0341, p0342). After the change: Calculate p0340 = 3.
- carry out a motor data identification routine (p1910).
- if required, reduce the dynamic factor (p1967 < 25 %).
For fault value = 5:
- the speed setpoint (p1961) is too high. Reduce the speed.
For fault value = 6:
- adapt the speed setpoint (p1961) or minimum limiting (p1080).
For fault value = 7:
- adapt the speed setpoint (p1961) or suppression (skip) bandwidths (p1091 ... p1094, p1101).
For fault value = 8:
- adapt the speed setpoint (p1961) or maximum limit (p1082, p1083 and p1086).
Re fault value = 9, 10:
- the measurement was carried out at an operating point where the load torque is too high. Select a more suitable operating point, either by changing the speed setpoint (p1961) or by reducing the load torque. The load torque may not be varied while making measurements.
Note:
The saturation characteristic identification routine can be disabled using p1959.1.
See also: p1959 (Rotating measurement configuration)

F07984 Drive: Speed controller optimization, moment of inertia

Message value: %1

Drive object: VECTOR_G

Reaction: OFF1 (NONE, OFF2)

Acknowledge: IMMEDIATELY

Cause: A fault has occurred while identifying the moment of inertia.
Fault value (r0949, interpret decimal):
1: The speed did not reach a steady-state condition.
2: The speed setpoint was not able to be approached as the minimum limiting is active.
3. The speed setpoint was not able to be approached as the suppression (skip) bandwidth is active.
4. The speed setpoint was not able to be approached as the maximum limiting is active.
5: It is not possible to increase the speed by 10% as the minimum limiting is active.
6: It is not possible to increase the speed by 10% as the suppression (skip) bandwidth is active.
7: It is not possible to increase the speed by 10% as the maximum limiting is active.
8: The torque difference after the speed setpoint step is too low in order to be able to still reliably identify the moment of inertia.
9: Too few data to be able to reliably identify the moment of inertia.
10: After the setpoint step, the speed either changed too little or in the incorrect direction.
11: The identified moment of inertia is not plausible.

Remedy: For fault value = 1:
- check the motor parameters (rating plate data). After the change: Calculate p0340 = 3.
- check the moment of inertia (p0341, p0342). After the change: Calculate p0340 = 3.
- carry out a motor data identification routine (p1910).
- if required, reduce the dynamic factor (p1967 < 25 %).
Re fault value = 2, 5:
- adapt the speed setpoint (p1965) or adapt the minimum limit (p1080).
Re fault value = 3, 6:
- adapt the speed setpoint (p1965) or suppression (skip) bandwidths (p1091 ... p1094, p1101).
Re fault value = 4, 7:
- adapt the speed setpoint (p1965) or maximum limit (p1082, p1083 and p1086).
For fault value = 8:
- the total drive moment of inertia is far higher than that of the motor (refer to p0341, p0342). De-select rotating measurement (p1960), enter the moment of inertia p0342, re-calculate the speed controller p0340 = 4 and repeat the measurement.

© Siemens AG 2012 All Rights Reserved

For fault value = 9:
- check the moment of inertia (p0341, p0342). After the change, re-calculate (p0340 = 3 or 4).
For fault value = 10:
- check the moment of inertia (p0341, p0342). After the change: Calculate p0340 = 3.
Note:
The moment of inertia identification routine can be disabled using p1959.2.
See also: p1959 (Rotating measurement configuration)

F07985 Drive: Speed controller optimization (oscillation test)

Message value: %1
Drive object: VECTOR_G
Reaction: OFF1 (NONE, OFF2)
Acknowledge: IMMEDIATELY
Cause: A fault has occurred during the vibration test.
Fault value (r0949, interpret decimal):
1: The speed did not reach a steady-state condition.
2: The speed setpoint was not able to be approached as the minimum limiting is active.
3: The speed setpoint was not able to be approached as the suppression (skip) bandwidth is active.
4: The speed setpoint was not able to be approached as the maximum limiting is active.
5: Torque limits too low for a torque step.
6: No suitable speed controller setting was found.
Remedy: For fault value = 1:
- check the motor parameters (rating plate data). After the change: Calculate p0340 = 3.
- check the moment of inertia (p0341, p0342). After the change: Calculate p0340 = 3.
- carry out a motor data identification routine (p1910).
- if required, reduce the dynamic factor (p1967 < 25 %).
For fault value = 2:
- adapt the speed setpoint (p1965) or adapt the minimum limit (p1080).
For fault value = 3:
- adapt the speed setpoint (p1965) or suppression (skip) bandwidths (p1091 ... p1094, p1101).
For fault value = 4:
- adapt the speed setpoint (p1965) or maximum limit (p1082, p1083 and p1086).
For fault value = 5:
- increase the torque limits (e.g. p1520, p1521).
For fault value = 6:
- reduce the dynamic factor (p1967).
- disable the vibration test (p1959.4 = 0) and repeat the rotating measurement.
See also: p1959 (Rotating measurement configuration)

F07986 Drive: Rotating measurement ramp-function generator

Message value: %1
Drive object: VECTOR_G
Reaction: OFF1 (NONE, OFF2)
Acknowledge: IMMEDIATELY
Cause: During the rotating measurements, problems with the ramp-function generator occurred.
Fault value (r0949, interpret decimal):
1: The positive and negative directions are inhibited.
Remedy: For fault value = 1:
Enable the direction (p1110 or p1111).

A07987 Drive: Rotating measurement, no encoder available

Message value: %1
Drive object: VECTOR_G
Reaction: NONE
Acknowledge: NONE
Cause: No encoder available. The rotating measurement was carried out without encoder.
Remedy: Connect encoder or select p1960 = 1, 3.

© Siemens AG 2012 All Rights Reserved

F07988 Drive: Rotating measurement, no configuration selected

Message value: -
Drive object: VECTOR_G
Reaction: OFF2 (NONE, OFF1)
Acknowledge: IMMEDIATELY
Cause: When configuring the rotating measurement (p1959), no function was selected.
Remedy: Select at least one function for automatic optimization of the speed controller (p1959).
See also: p1959 (Rotating measurement configuration)

F07989 Drive: Rotating measurement leakage inductance (q-axis)

Message value: %1
Drive object: VECTOR_G
Reaction: OFF1 (NONE, OFF2)
Acknowledge: IMMEDIATELY
Cause: An error has occurred while measuring the dynamic leakage inductance.
Fault value (r0949, interpret decimal):
1: The speed did not reach a steady-state condition.
2: The speed setpoint was not able to be approached as the minimum limiting is active.
3: The speed setpoint was not able to be approached as the suppression (skip) bandwidth is active.
4: The speed setpoint was not able to be approached as the maximum limiting is active.
5: The 100% flux setpoint was not reached.
6: No Lq measurement possible because field weakening is active.
7: Speed actual value exceeds the maximum speed p1082 or 75% of the rated motor speed.
8: Speed actual value is below 2 % of the rated motor speed.
Remedy: For fault value = 1:
- check the motor parameters.
- carry out a motor data identification routine (p1910).
- if required, reduce the dynamic factor (p1967 < 25 %).
For fault value = 2:
- adapt the speed setpoint (p1965) or adapt the minimum limit (p1080).
For fault value = 3:
- adapt the speed setpoint (p1965) or suppression (skip) bandwidths (p1091 ... p1094, p1101).
For fault value = 4:
- adapt the speed setpoint (p1965) or maximum limit (p1082, p1083 and p1086).
For fault value = 5:
- flux setpoint p1570 = 100 % and current setpoint p1610 = 0 % kept during the Lq measurement.
For fault value = 6:
- reduce the regenerative load so that the drive does not reach field weakening when accelerating.
- reduce p1965 so that the q leakage inductance is recorded at lower speeds.
For fault value = 7:
- increase p1082 if this is technically permissible.
- reduce p1965 so that the q leakage inductance is recorded at lower speeds.
For fault value = 8:
- reduce the load when motoring so that the drive is not braked.
- increase p1965 so that the measurement may be taken at higher speeds.
Note:
The measurement of the q leakage inductance can be disabled using p1959.5. If only p1959.5 is set, then only this measurement is carried out if p1960 is set to 1, 2 and the drive is powered up.
See also: p1959 (Rotating measurement configuration)

F07990 Drive: Incorrect motor data identification

Message value: %1
Drive object: VECTOR_G
Reaction: OFF2 (NONE, OFF1)
Acknowledge: IMMEDIATELY
Cause: A fault has occurred during the identification routine.
Fault value (r0949, interpret decimal):
1: Current limit value reached.
2: Identified stator resistance lies outside the expected range 0.1 ... 100% of Zn.

© Siemens AG 2012 All Rights Reserved

3: Identified rotor resistance lies outside the expected range 0.1 ... 100% of Zn. Separately excited synchronous motors: damping resistance outside 1.0 ...15 % of Zn.
4: Identified stator reactance lies outside the expected range 50 ... 900 % of Zn. Separately excited synchronous motors: stator reactance outside 20 ...500 % of Zn.
5: Identified magnetizing reactance lies outside the expected range 50 ... 900 % of Zn. Separately excited synchronous motors: magnetizing reactance outside 20 ...500 % of Zn.
6: Identified rotor time constant lies outside the expected range 10 ms ... 5 s. Separately-excited synchronous motors: damping time constant outside of 5 ms ... 1 s.
7: Identified total leakage reactance lies outside the expected range 4 ... 100 % of Zn.
8: Identified stator leakage reactance lies outside the expected range 2 ... 50% of Zn. Separately excited synchronous motors: stator leakage reactance outside 2 ...40 % of Zn.
9: Identified rotor leakage reactance lies outside the expected range 2 ... 50% of Zn. Separately excited synchronous motors: damping leakage reactance outside 1.5 ...20 % of Zn.
10: Motor has been incorrectly connected.
11: Motor shaft rotates.
12: Ground fault detected.
20: Identified threshold voltage of the semiconductor devices lies outside the expected range 0 ... 10 V.
30: Current controller in voltage limiting.
40: At least one identification contains errors. The identified parameters are not saved to prevent inconsistencies.
50: The selected sampling time is too low for the motor identification (p0115[0]).
Note:
Percentage values are referred to the rated motor impedance:
Zn = Vmot.nom / sqrt(3) / Imot,nom

Remedy: Re fault value = 1 ... 40:
- check whether motor data have been correctly entered in p0300, p0304 ... p0311.
- is there an appropriate relationship between the motor power rating and that of the Motor Module? The ratio of the Motor Module to the rated motor current should not be less than 0.5 and not be greater than 4.
- check configuration (star-delta).

Re fault value = 11 in addition:
- Deactivate oscillation monitoring (p1909.7 = 1).

For fault value = 2:
- for parallel circuits, check the motor winding system in p7003. If, for power units connected in parallel, a motor is specified with a single-winding system (p7003 = 0), although a multi-winding system is being used, then a large proportion of the stator resistance is interpreted as feeder cable resistance and entered in p0352.

Re fault value = 4, 7:
- check whether inductances are correctly set in p0233 and p0353.
- check whether motor has been correctly connected (star-delta).
- Set p1909.0 = 1.

For fault value = 12:
- check the power cable connections.
- check the motor.
- check the CT.

For fault value = 50:
- Perform a motor data identification with a higher sampling time, and after this, change to the required higher sampling time (p0115[0]).

A07991 (N) Drive: Motor data identification activated

Message value: -

Drive object: VECTOR_G

Reaction: NONE

Acknowledge: NONE

Cause: The motor data identification routine is activated.
The motor data identification routine is carried out at the next power-on command.
If rotating measurement is selected (see p1900, p1960), it will not be possible to save the parameter assignment.
Once motor data identification has been completed or de-activated, the option to save the parameter assignment will be made available again.
See also: p1910 (Motor data identification selection)

Remedy: Not necessary.
The alarm automatically disappears after the motor data identification routine has been successfully completed or for the setting p1900 = 0.

Reaction upon N: NONE

Acknowl. upon N: NONE

© Siemens AG 2012 All Rights Reserved

A07994 (F, N) Drive: motor data identification not performed

Message value: -
Drive object: VECTOR_G
Reaction: NONE
Acknowledge: NONE
Cause: The "vector control" mode has been selected and a motor data identification has still not been performed.
The alarm is initiated when changing the drive data set (see r0051) in the following cases:
- vector control is parameterized in the actual drive data set (p1300 >= 20).
and
- motor data identification has still not been performed in the actual drive data set (see r3925).
Note:
For SINAMICS G120, a check is made and an alarm is output also when exiting commissioning and when the system powers up.
Remedy: - Perform motor data identification (see p1900).
- If required, parameterize "U/f control" (p1300 < 20).
- switch over to a drive data set, in which the conditions do not apply.
Reaction upon F: NONE (OFF2)
Acknowl. upon F: IMMEDIATELY
Reaction upon N: NONE
Acknowl. upon N: NONE

F08000 (N, A) TB: +/-15 V power supply faulted

Message value: %1
Drive object: All objects
Reaction: Infeed: NONE (OFF1, OFF2)
Vector: NONE (IASC/DCBRAKE, OFF1, OFF2, OFF3, STOP1, STOP2)
Acknowledge: IMMEDIATELY (POWER ON)
Cause: Terminal Board 30 detects an incorrect internal power supply voltage.
Fault value (r0949, interpret decimal):
0: Error when testing the monitoring circuit.
1: Fault in normal operation.
Remedy: - replace Terminal Board 30.
- replace Control Unit.
Reaction upon N: NONE
Acknowl. upon N: NONE
Reaction upon A: NONE
Acknowl. upon A: NONE

F08010 (N, A) TB: Analog-digital converter

Message value: -
Drive object: All objects
Reaction: Infeed: NONE (OFF1, OFF2)
Vector: OFF1 (IASC/DCBRAKE, NONE, OFF2, OFF3, STOP1, STOP2)
Acknowledge: IMMEDIATELY (POWER ON)
Cause: The analog/digital converter on Terminal Board 30 has not supplied any converted data.
Remedy: - check the power supply.
- replace Terminal Board 30.
Reaction upon N: NONE
Acknowl. upon N: NONE
Reaction upon A: NONE
Acknowl. upon A: NONE

© Siemens AG 2012 All Rights Reserved

F08500 (A) COMM BOARD: Monitoring time configuration expired

Message value: %1
Drive object: All objects
Reaction: Infeed: OFF1 (OFF2)
Vector: OFF1 (OFF2, OFF3)
Acknowledge: IMMEDIATELY
Cause: The monitoring time for the configuration has expired.
Fault value (r0949, interpret decimal):
0: The transfer time of the send configuration data has been exceeded.
1: The transfer time of the receive configuration data has been exceeded.
Remedy: Check communications link.
Reaction upon A: NONE
Acknowl. upon A: NONE

F08501 (N, A) COMM BOARD: Setpoint timeout

Message value: -
Drive object: All objects
Reaction: Infeed: OFF1 (OFF2)
Vector: OFF3 (IASC/DCBRAKE, NONE, OFF1, OFF2, STOP1, STOP2)
Acknowledge: IMMEDIATELY
Cause: The reception of setpoints from the COMM BOARD has been interrupted.
- bus connection interrupted.
- controller switched off.
- controller set into the STOP state.
- COMM BOARD defective.
See also: p8840 (COMM BOARD monitoring time)
Remedy: - Restore the bus connection and set the controller to RUN.
- check the set monitoring time if the error persists.
See also: p8840 (COMM BOARD monitoring time)
Reaction upon N: NONE
Acknowl. upon N: NONE
Reaction upon A: NONE
Acknowl. upon A: NONE

F08502 (A) COMM BOARD: Monitoring time sign-of-life expired

Message value: -
Drive object: All objects
Reaction: Infeed: OFF1 (OFF2)
Vector: OFF1 (OFF2, OFF3)
Acknowledge: IMMEDIATELY
Cause: The monitoring time for the sign-of-life counter has expired.
The connection to the COMM BOARD was interrupted.
Remedy: - check communications link.
- check COMM BOARD.
Reaction upon A: NONE
Acknowl. upon A: NONE

A08504 (F) COMM BOARD: Internal cyclic data transfer error

Message value: %1
Drive object: All objects
Reaction: NONE
Acknowledge: NONE
Cause: The cyclic actual and/or setpoint values were not transferred within the specified times.
Alarm value (r2124, interpret decimal):
Only for internal Siemens troubleshooting.
Remedy: Check the parameterizing telegram (Ti, To, Tdp, etc.).

© Siemens AG 2012 All Rights Reserved

Reaction upon F: Infeed: NONE (OFF1, OFF2)
Vector: NONE (OFF1, OFF2, OFF3)
Acknowl. upon F: IMMEDIATELY

F08510 (A) COMM BOARD: Send configuration data invalid

Message value: %1
Drive object: All objects
Reaction: Infeed: OFF1 (OFF2)
Vector: OFF1 (OFF2, OFF3)
Acknowledge: IMMEDIATELY
Cause: COMM BOARD did not accept the send-configuration data.
Fault value (r0949, interpret decimal):
Return value of the send-configuration data check.
Remedy: Check the send configuration data.
Reaction upon A: NONE
Acknowl. upon A: NONE

A08511 (F) COMM BOARD: Receive configuration data invalid

Message value: %1
Drive object: All objects
Reaction: NONE
Acknowledge: NONE
Cause: The drive unit did not accept the receive configuration data.
Alarm value (r2124, interpret decimal):
Return value of the receive configuration data check.
1: Connection established to more drive objects than configured in the device. The drive objects for process data exchange and their sequence are defined in p0978.
2: Too many PZD data words for output or input to a drive object. The number of possible PZD items in a drive object is determined by the number of indices in r2050/p2051 for PZD IF1, and in r8850/p8851 for PZD IF2.
3: Uneven number of bytes for input or output.
4: Setting data for synchronization not accepted. For more information, see A01902.
5: Cyclic operation not active.
17: CBE20 Shared Device: Configuration of the F-CPU has been changed.
223: Illegal clock synchronization for the PZD interface set in p8815[0].
500: Illegal PROFIsafe configuration for the interface set in p8815[1].
501: PROFIsafe parameter error (e.g. F_dest).
503: PROFIsafe connection is rejected as long as there is no isochronous connection (p8969).
Additional values:
Only for internal Siemens troubleshooting.
Remedy: Check the receive configuration data.
Re alarm value = 1, 2:
- Check the list of the drive objects with process data exchange (p0978). With p0978[x] = 0, all of the following drive objects in the list are excluded from the process data exchange.
Re alarm value = 2:
- Check the number of data words for output and input to a drive object.
Re alarm value = 17:
- CBE20 Shared Device: Unplug/plug A-CPU.
Re alarm value = 223, 500:
- Check the setting in p8839 and p8815.
- Ensure that only one PZD interface is operated in clock synchronism or with PROFIsafe.
Re alarm value = 501:
- Check the set PROFIsafe address (p9610).
Reaction upon F: Infeed: NONE (OFF1, OFF2)
Vector: NONE (OFF1, OFF2, OFF3)
Acknowl. upon F: IMMEDIATELY

© Siemens AG 2012 All Rights Reserved

A08520 (F) COMM BOARD: Non-cyclic channel error

Message value: %1
Drive object: All objects
Reaction: NONE
Acknowledge: NONE
Cause: The memory or the buffer status of the non-cyclic channel has an error.
Alarm value (r2124, interpret decimal):
0: Error in the buffer status.
1: Error in the memory.
Remedy: Check communications link.
Reaction upon F: Infeed: NONE (OFF1, OFF2)
Vector: NONE (OFF1, OFF2, OFF3)
Acknowl. upon F: IMMEDIATELY

A08526 (F) COMM BOARD: No cyclic connection

Message value: -
Drive object: All objects
Reaction: NONE
Acknowledge: NONE
Cause: There is no cyclic connection to the control.
Remedy: Establish the cyclic connection and activate the control with cyclic operation.
For PROFINET, check the parameters "Name of Station" and "IP of Station" (r61000, r61001).
If a CBE20 is inserted and PROFIBUS is to communicate via PZD Interface 1, then this must be parameterized using the STARTER commissioning tool or directly using p8839.
Reaction upon F: NONE (OFF1)
Acknowl. upon F: IMMEDIATELY

A08530 (F) COMM BOARD: Message channel error

Message value: %1
Drive object: All objects
Reaction: NONE
Acknowledge: NONE
Cause: The memory or the buffer status of the message channel has an error.
Alarm value (r2124, interpret decimal):
0: Error in the buffer status.
1: Error in the memory.
Remedy: Check communications link.
Reaction upon F: Infeed: NONE (OFF1, OFF2)
Vector: NONE (OFF1, OFF2, OFF3)
Acknowl. upon F: IMMEDIATELY

A08550 PZD Interface Hardware assignment error

Message value: %1
Drive object: All objects
Reaction: NONE
Acknowledge: NONE
Cause: The assignment of the hardware to the PZD interface has been incorrectly parameterized.
Alarm value (r2124, interpret decimal):
1: Only one of the two indices is not equal to 99 (automatic).
2: Both PZD interfaces are assigned to the same hardware.
3: Assigned COMM BOARD missing.
4: CBC10 is assigned to interface 1.
See also: p8839 (PZD interface hardware assignment)
Remedy: Check the parameterization and if required, correct (p8839).

© Siemens AG 2012 All Rights Reserved

A08560 IE: Syntax error in configuration file

Message value: -

Drive object: All objects

Reaction: NONE

Acknowledge: NONE

Cause: A syntax error has been detected in the ASCII configuration file for the Industrial Ethernet interface (X127). The saved configuration file has not been loaded.
Note:
IE: Industrial Ethernet

Remedy: - Check the interface configuration (p8900 and following), correct if necessary, and activate (p8905 = 1).
- Save the parameters for interface configuration (e.g. p8905 = 2)
or
- Reconfigure the station via the "Edit Ethernet node" screen form (e.g. with STARTER commissioning software).
See also: p8905 (IE Interface configuration)

A08561 IE: Consistency error affecting adjustable parameters

Message value: -

Drive object: All objects

Reaction: NONE

Acknowledge: NONE

Cause: A consistency error was detected when activating the configuration (p8905 = 1) for the Industrial Ethernet interface (X127). The currently set configuration has not been activated.
Possible causes:
- IP address, subnet mask or default gateway is not correct
- IP address or station name used twice in the network
- station name contains invalid characters, etc.
Note:
IE: Industrial Ethernet
See also: p8900 (IE Name of Station), p8901 (IE IP Address of Station), p8902 (IE Default Gateway of Station), p8903 (IE Subnet Mask of Station)

Remedy: - Check the required interface configuration (p8900 and following), correct if necessary, and activate (p8905 = 1).
or
- Reconfigure the station via the "Edit Ethernet node" screen form (e.g. with STARTER commissioning software).
See also: p8905 (IE Interface configuration)

A08562 PROFINET: Syntax error in configuration file

Message value: -

Drive object: All objects

Reaction: NONE

Acknowledge: NONE

Cause: A syntax error has been detected in the ASCII configuration file for the onboard PROFINET interface. The saved configuration file has not been loaded.

Remedy: - Check the interface configuration (p8920 and following), correct if necessary, and activate (p8925 = 1).
- Save the parameters for interface configuration (e.g. p8925 = 2).
or
- Reconfigure the station via the "Edit Ethernet node" screen form (e.g. with STARTER commissioning software).
See also: p8925 (PN interface configuration)

A08563 PROFINET: Consistency error affecting adjustable parameters

Message value: -

Drive object: All objects

Reaction: NONE

Acknowledge: NONE

Cause: A consistency error was detected when activating the configuration (p8925 = 1) for the onboard PROFINET interface. The currently set configuration has not been activated.
Possible causes:
- IP address, subnet mask or default gateway is not correct

© Siemens AG 2012 All Rights Reserved

- IP address or station name used twice in the network
- station name contains invalid characters, etc.
See also: p8920 (PN Name of Station), p8921 (PN IP address of station), p8922 (PN Default Gateway of Station), p8923 (PN Subnet Mask of Station)

Remedy: - Check the required interface configuration (p8940 and following), correct if necessary, and activate (p8945 = 1).
or
- Reconfigure the station via the "Edit Ethernet node" screen form (e.g. with STARTER commissioning software).
See also: p8925 (PN interface configuration)

A08564 CBE20: Syntax error in configuration file

Message value: -

Drive object: All objects

Reaction: NONE

Acknowledge: NONE

Cause: A syntax error has been detected in the ASCII configuration file for the Communication Board Ethernet 20 (CBE20).
The saved configuration file has not been loaded.

Remedy: - Check the CBE20 configuration (p8940 and following), correct if necessary, and activate (p8945 = 2).
Note:
The configuration is not applied until the next POWER ON!
- reconfigure the CBE20 (e.g. using the STARTER commissioning software)
See also: p8945 (CBE20 interface configuration)

A08565 CBE20: Consistency error affecting adjustable parameters

Message value: -

Drive object: All objects

Reaction: NONE

Acknowledge: NONE

Cause: A consistency error was detected when activating the configuration (p8945 = 1) for the Communication Board Ethernet 20 (CBE20).
The currently set configuration has not been activated.
Possible causes:
- IP address, subnet mask or default gateway is not correct
- IP address or station name used twice in the network
- station name contains invalid characters, etc.
See also: p8940 (CBE20 Name of Station), p8941 (CBE20 IP Address of Station), p8942 (CBE20 Default Gateway of Station), p8943 (CBE20 Subnet Mask of Station), p8944 (CBE20 DHCP Mode)

Remedy: Check the required interface configuration (p8940 and following), correct if necessary, and activate (p8945 = 1).
See also: p8945 (CBE20 interface configuration)

F08700 (A) CAN: Communications error

Message value: %1

Drive object: All objects

Reaction: Infeed: NONE (OFF1, OFF2)
Vector: OFF3 (NONE, OFF1, OFF2)

Acknowledge: IMMEDIATELY

Cause: A CAN communications error has occurred.
Fault value (r0949, interpret decimal):
1: The error counter for the send telegrams has exceeded the BUS OFF value 255. The bus disables the CAN controller.
- bus cable short circuit.
- incorrect baud rate.
- incorrect bit timing.
2: The master no longer interrogated the CAN node status longer than for its "life time". The "life time" is obtained from the "guard time" (p8604[0]) multiplied by the "life time factor" (p8604[1]).
- bus cable interrupted.
- bus cable not connected.
- incorrect baud rate.
- incorrect bit timing.
- master fault.

© Siemens AG 2012 All Rights Reserved

Note:
The fault response can be set as required using p8641.
See also: p8604 (CAN node guarding), p8641 (CAN Abort Connection Option Code)

Remedy: - check the bus cable
- check the baud rate (p8622).
- check the bit timing (p8623).
- check the master.
The CAN controller must be manually restarted with p8608 = 1 after the cause of the fault has been resolved!
See also: p8608 (CAN Clear Bus Off Error), p8622 (CAN bit rate), p8623 (CAN Bit Timing selection)

Reaction upon A: NONE

Acknowl. upon A: NONE

F08701 CAN: NMT state change

Message value: %1

Drive object: All objects

Reaction: Infeed: OFF2
Vector: OFF3

Acknowledge: IMMEDIATELY

Cause: A CANopen NMT state transition from "operational" to "pre-operational" or after "stopped".
Fault value (r0949, interpret decimal):
1: CANopen NMT state transition from "operational" to "pre-operational".
2: CANopen NMT state transition from "operational" to "stopped".
Note:
In the NMT state "pre-operational", process data cannot be transferred and in the NMT state "stopped", no process data and no service data can be transferred.

Remedy: Not necessary.
Acknowledge the fault and continue operation.

F08702 (A) CAN: RPDO Timeout

Message value: -

Drive object: All objects

Reaction: Infeed: OFF2 (NONE, OFF1)
Vector: OFF3 (NONE, OFF1, OFF2)

Acknowledge: IMMEDIATELY

Cause: The monitoring time of the CANopen RPDO telegram has expired because the bus connection was either interrupted or the CANopen Master was switched-off.
See also: p8699 (CAN: RPDO monitoring time)

Remedy: - check the bus cable
- check the master.
- If required, increase the monitoring time (p8699).

Reaction upon A: NONE

Acknowl. upon A: NONE

F08703 (A) CAN: Maximum number of drive objects exceeded

Message value: -

Drive object: All objects

Reaction: Infeed: OFF2 (NONE, OFF1)
Vector: OFF3 (NONE, OFF1, OFF2)

Acknowledge: IMMEDIATELY

Cause: The maximum number of 8 drive objects with the "CAN" function module was exceeded.
Note:
In the CANopen standard only a maximum of 8 drive objects are defined for each CANopen slave.

Remedy: - New commissioning of maximum 8 drive objects with the "CAN" function module in the topology.
- For the drive objects, if required, deselect the "CAN" function module (r0108.29).

Reaction upon A: NONE

Acknowl. upon A: NONE

© Siemens AG 2012 All Rights Reserved

A08751 CAN: Telegram loss

Message value: -
Drive object: All objects
Reaction: NONE
Acknowledge: NONE
Cause: The CAN controller has lost a receive message (telegram).
Remedy: Reduce the cycle times of the receive messages.

A08752 CAN: Error counter for error passive exceeded

Message value: -
Drive object: All objects
Reaction: NONE
Acknowledge: NONE
Cause: The error counter for the send or receive telegrams has exceeded the value 127.
Remedy: - check the bus cable
- set a higher baud rate (p8622).
- check the bit timing and if required optimize (p8623).
See also: p8622 (CAN bit rate), p8623 (CAN Bit Timing selection)

A08753 CAN: Message buffer overflow

Message value: %1
Drive object: All objects
Reaction: NONE
Acknowledge: NONE
Cause: A message buffer overflow.
Alarm value (r2124, interpret decimal):
1: Non-cyclic send buffer (SDO response buffer) overflow.
2: Non-cyclic receive buffer (SDO receive buffer) overflow.
3: Cyclic send buffer (PDO send buffer) overflow.
Remedy: - check the bus cable.
- set a higher baud rate (p8622).
- check the bit timing and if required optimize (p8623).
Re alarm value = 2:
- reduce the cycle times of the SDO receive messages.
- SDO request from master only after SDO feedback for previous SDO request.
See also: p8622 (CAN bit rate), p8623 (CAN Bit Timing selection)

A08754 CAN: Incorrect communications mode

Message value: -
Drive object: All objects
Reaction: NONE
Acknowledge: NONE
Cause: In the "operational" mode, an attempt was made to change parameters p8700 ... p8737.
Remedy: Change to the "pre-operational" or "stopped" mode.

A08755 CAN: Obj cannot be mapped

Message value: -
Drive object: All objects
Reaction: NONE
Acknowledge: NONE
Cause: The CANopen object is not provided for the Process Data Object (PDO) Mapping.
Remedy: Use a CANopen object intended for the PDO mapping or enter 0.
The following objects can be mapped in the Receive Process Data Object (RPDO) or Transmit Process Data Object (TPDO):
- RPDO: 6040 hex, 6060 hex, 60FF hex, 6071 hex; 5800 hex - 580F hex; 5820 hex - 5827 hex

© Siemens AG 2012 All Rights Reserved

- TPDO: 6041 hex, 6061 hex, 6063 hex, 6069 hex, 606B hex, 606C hex, 6074 hex; 5810 hex - 581F hex; 5830 hex - 5837 hex
Only sub-index 0 of the specified objects can be mapped.
Note:
As long as A08755 is present, the COB-ID cannot be set to valid.

A08756 CAN: Number of mapped bytes exceeded

Message value: -
Drive object: All objects
Reaction: NONE
Acknowledge: NONE
Cause: The number of bytes of the mapped objects exceeds the telegram size for net data. A max. of 8 bytes is permissible.
Remedy: Map fewer objects or objects with a smaller data type.
See also: p8710, p8711, p8712, p8713, p8714, p8715, p8716, p8717, p8730, p8731, p8732, p8733, p8734, p8735, p8736, p8737

A08757 CAN: Set COB-ID invalid

Message value: -
Drive object: All objects
Reaction: NONE
Acknowledge: NONE
Cause: For online operation, the appropriate COB-ID must be set invalid before mapping.
Example:
Mapping for RPDO 1 should be changed (p8710[0]).
--> set p8700[0] = C00006E0 hex (invalid COB-ID)
--> set p8710[0] as required.
--> p8700[0] enter a valid COB-ID
Remedy: Set the COB-ID to invalid.

A08758 CAN: Number of PDO channels too low

Message value: -
Drive object: All objects
Reaction: NONE
Acknowledge: NONE
Cause: The number of PDO channels in p8740 has either been set to 0 or too low.
See also: p8740 (CAN channel distribution)
Remedy: The number of channels set in p8740 must be greater than or equal to the number of PDOs.
There are 2 possibilities:
Increase the number of channels in p8740 and confirm the selection using p8741.
Reduce the number of PDOs by setting the COB-ID to invalid.
See also: p8740 (CAN channel distribution), p8741 (CAN PDO configuration acknowledgement)

A08759 CAN: PDO COB-ID already available

Message value: -
Drive object: All objects
Reaction: NONE
Acknowledge: NONE
Cause: An existing PDO COB-ID was allocated.
Remedy: Select another PDO COB-ID.

A08800 PROFIenergy energy-saving mode active

Message value: %1
Drive object: All objects
Reaction: NONE
Acknowledge: NONE
Cause: The PROFIenergy energy-saving mode is active

© Siemens AG 2012 All Rights Reserved

Alarm value (r2124, interpret decimal):
Mode ID of the active PROFIenergy energy-saving mode.
See also: r5600 (Pe energy saving mode ID)

Remedy: The alarm automatically disappears when the energy-saving mode is exited.
Note:
After receiving the PROFIenergy command "End_Pause" via PROFINET, the energy-saving mode is exited.

A08802 PROFIenergy not possible to switch off incremental encoder supply

Message value: %1

Drive object: All objects

Reaction: NONE

Acknowledge: NONE

Cause: The incremental encoder is used for the closed-loop position control. This means that its power supply cannot be switched off during the PROFIenergy energy-saving mode, otherwise it would lose its position actual value.
Alarm value (r2124, interpret decimal):
Encoder number

Remedy: The alarm automatically disappears when the energy-saving mode is exited.
Note:
After receiving the PROFIenergy command "End_Pause" via PROFINET, the energy-saving mode is exited.

A13000 License not adequate

Message value: %1

Drive object: All objects

Reaction: NONE

Acknowledge: NONE

Cause: - for the drive unit, the options that require a license are being used but the licenses are not sufficient.
- an error occurred when checking the existing licenses.
Alarm value (r2124, interpret decimal):
0:
The existing license is not sufficient.
1:
An adequate license was not able to be determined as the memory card with the required licensing data was withdrawn in operation.
2:
An adequate license was not able to be determined as there is no licensing data available on the memory card.
3:
An adequate license was not able to be determined as there is a checksum error in the license key.
4:
An internal error occurred when checking the license.

Remedy: Re alarm value = 0:
Additional licenses are required and these must be activated (p9920, p9921).
Re alarm value = 1:
With the system powered down, re-insert the memory card that matches the system.
Re alarm value = 2:
Enter and activate the license key (p9920, p9921).
Re alarm value = 3:
Compare the license key (p9920) entered with the license key on the certificate of license.
Re-enter the license key and activate (p9920, p9921).
Re alarm value = 4:
- carry out a POWER ON.
- upgrade firmware to later version.
- contact the Hotline.

A13001 Error in license checksum

Message value: -

Drive object: All objects

Reaction: NONE

Acknowledge: NONE

Cause: When checking the checksum of the license key, an error was detected.

© Siemens AG 2012 All Rights Reserved

Remedy: Compare the license key (p9920) entered with the license key on the certificate of license.
Re-enter the license key and activate (p9920, p9921).

F13009 Licensing OA application not licensed

Message value: %1
Drive object: All objects
Reaction: OFF1
Acknowledge: IMMEDIATELY
Cause: At least one OA application which is under license does not have a license.
Note:
Refer to r4955 and p4955 for information about the installed OA applications.
Remedy: - enter and activate the license key for OA applications under license (p9920, p9921).
- if necessary, de-activate unlicensed OA applications (p4956).
See also: p9920 (Licensing, enter license key), p9921 (Licensing, activate license key)

F13010 Licensing function module not licensed

Message value: %1
Drive object: All objects
Reaction: OFF1
Acknowledge: IMMEDIATELY
Cause: At least one function module which is under license does not have a license.
Fault value (r0949, interpret hexadecimal):
Bit x = 1: The corresponding function module does not have a license.
Note:
Refer to p0108 or r0108 for the assignment between the bit number and function module.
Remedy: - enter and activate the license key for function modules under license (p9920, p9921).
- if necessary, de-activate unlicensed function modules (p0108, r0108).
See also: p9920 (Licensing, enter license key), p9921 (Licensing, activate license key)

F13100 Know-how protection: Copy protection error

Message value: %1
Drive object: All objects
Reaction: OFF1
Acknowledge: IMMEDIATELY
Cause: The know-how protection with copy protection for the memory card is active.
An error has occurred when checking the memory card.
Fault value (r0949, interpret decimal):
0: A memory card is not inserted.
2: An invalid memory card is inserted.
3: The memory card is being used in another Control Unit.
12: An invalid memory card is inserted (OEM input incorrect, p7769).
13: The memory card is being used in another Control Unit (OEM input incorrect, p7759).
See also: p7765 (KHP memory card copy protection)
Remedy: For fault value = 0:
- Insert the correct memory card and carry out POWER ON.
Re fault value = 2, 3, 12, 13:
- contact the responsible OEM.
- Deactivate copy protection (p7765) and acknowledge the fault (p3981).
- Deactivate know-how protection (p7766-p7768) and acknowledge the fault (p3981).
Note:
In general, the copy protection can only be changed when know-how protection is deactivated.
KHP: Know-How Protection
See also: p3981 (Faults, acknowledge drive object), p7765 (KHP memory card copy protection)

© Siemens AG 2012 All Rights Reserved

F13101 Know-how protection: Copy protection cannot be activated

Message value: %1

Drive object: All objects

Reaction: NONE

Acknowledge: IMMEDIATELY

Cause: An error occurred when attempting to activate the copy protection for the memory card.
Fault value (r0949, interpret decimal):
0: A memory card is not inserted.
Note:
KHP: Know-How Protection

Remedy: - insert the memory card and carry out POWER ON.
- Try to activate copy protection again (p7765).
See also: p7765 (KHP memory card copy protection)

F13102 Know-how protection: Consistency error of the protected data

Message value: %1

Drive object: All objects

Reaction: OFF1

Acknowledge: IMMEDIATELY

Cause: An error was identified when checking the consistency of the protected files. As a consequence, the project on the memory card cannot be run.
Fault value (r0949, interpret hexadecimal):
yyyyxxxx hex: yyyy = object number, xxxx = fault cause
xxxx = 1:
A file has a checksum error.
xxxx = 2:
The files are not consistent with one another.
Note:
KHP: Know-How Protection

Remedy: - Replace the project on the memory card.
- Restore the factory setting and download again.

F30001 Power unit: Overcurrent

Message value: Fault cause: %1 bin

Drive object: B_INF, VECTOR_G

Reaction: OFF2

Acknowledge: IMMEDIATELY

Cause: The power unit has detected an overcurrent condition.
- closed-loop control is incorrectly parameterized.
- motor has a short-circuit or fault to ground (frame).
- U/f operation: Up ramp set too low.
- U/f operation: Rated motor current is significantly greater than that of the Motor Module.
- infeed: High discharge and post-charging currents for voltage dip.
- infeed: High post-charging currents for overload when motoring and DC link voltage dip.
- infeed: Short-circuit currents at power-up due to the missing line reactor.
- power cables are not correctly connected.
- the power cables exceed the maximum permissible length.
- power unit defective.
- line phase interrupted.
Additional causes for a parallel switching device (r0108.15 = 1):
- a power unit has tripped (powered down) due to a ground fault.
- the closed-loop circulating current control is either too slow or has been set too fast.
Fault value (r0949, interpret bitwise binary):
Bit 0: Phase U.
Bit 1: Phase V.
Bit 2: Phase W.
Bit 3: Overcurrent in the DC link.
Note:
Fault value = 0 means that the phase with overcurrent is not recognized (e.g. for blocksize device).

© Siemens AG 2012 All Rights Reserved

Remedy:
- check the motor data - if required, carry out commissioning.
- check the motor circuit configuration (star/delta).
- U/f operation: Increase up ramp.
- U/f operation: Check the assignment of the rated currents of the motor and Motor Module.
- infeed: Check the line supply quality.
- infeed: Reduce the motor load.
- infeed: Check the correct connection of the line filter and the line commutating reactor.
- check the power cable connections.
- check the power cables for short-circuit or ground fault.
- check the length of the power cables.
- replace power unit.
- check the line supply phases.

For a parallel switching device (r0108.15 = 1) the following additionally applies:
- check the ground fault monitoring thresholds (p0287).
- check the setting of the closed-loop circulating current control (p7036, p7037).

F30002 Power unit: DC link voltage, overvoltage

Message value: %1

Drive object: B_INF

Reaction: OFF2

Acknowledge: IMMEDIATELY

Cause: The power unit has detected overvoltage in the DC link.
- motor regenerates too much energy.
- device connection voltage too high.
- when operating with a Voltage Sensing Module (VSM), the phase assignment L1, L2, L3 at the VSM differs from the phase assignment at the power unit.
- line phase interrupted.

Fault value (r0949, interpret decimal):
DC link voltage at the time of trip [0.1 V].

Remedy:
- increase the ramp-down time
- activate the DC link voltage controller
- use a brake resistor or Active Line Module
- increase the current limit of the infeed or use a larger module (for the Active Line Module)
- check the device supply voltage
- check and correct the phase assignment at the VSM and at the power unit
- check the line supply phases.

See also: p0210 (Drive unit line supply voltage), p1240 (Vdc controller or Vdc monitoring configuration)

F30002 Power unit: DC link voltage, overvoltage

Message value: %1

Drive object: VECTOR_G

Reaction: OFF2

Acknowledge: IMMEDIATELY

Cause: The power unit has detected overvoltage in the DC link.
- motor regenerates too much energy.
- device connection voltage too high.
- when operating with a Voltage Sensing Module (VSM), the phase assignment L1, L2, L3 at the VSM differs from the phase assignment at the power unit.
- line phase interrupted.

Fault value (r0949, interpret decimal):
DC link voltage at the time of trip [0.1 V].

Remedy:
- increase the ramp-down time
- activate the DC link voltage controller
- use a brake resistor or Active Line Module
- increase the current limit of the infeed or use a larger module (for the Active Line Module)
- check the device supply voltage
- check and correct the phase assignment at the VSM and at the power unit
- check the line supply phases.
- set the rounding times (p1130, p1136). This is particularly recommended in U/f operation to relieve the DC link voltage controller with rapid ramp-down times of the ramp-function generator.

See also: p0210 (Drive unit line supply voltage), p1240 (Vdc controller or Vdc monitoring configuration)

© Siemens AG 2012 All Rights Reserved

F30003 Power unit: DC link voltage, undervoltage

Message value: -

Drive object: B_INF, VECTOR_G

Reaction: OFF2

Acknowledge: IMMEDIATELY

Cause: The power unit has detected an undervoltage condition in the DC link.
- line supply failure
- line supply voltage below the permissible value.
- line supply infeed failed or interrupted.
- line phase interrupted.

Note:
The monitoring threshold for undervoltage in the DC link is indicated in r0296.

Remedy: - check the line supply voltage
- check the line supply infeed and observe the fault messages relating to it (if there are any)
- check the line supply phases.
- check the line supply voltage setting (p0210).
- booksize units: check the setting of p0278.

Note:
The ready signal for the infeed (r0863) must be interconnected to the associated drive inputs (p0864).
See also: p0210 (Drive unit line supply voltage)

F30004 Power unit: Overtemperature heat sink AC inverter

Message value: %1

Drive object: B_INF, VECTOR_G

Reaction: OFF2

Acknowledge: IMMEDIATELY

Cause: The temperature of the power unit heat sink has exceeded the permissible limit value.
- insufficient cooling, fan failure.
- overload.
- ambient temperature too high.
- pulse frequency too high.

Fault value (r0949):
Temperature [1 bit = 0.01 °C].

Remedy: - check whether the fan is running.
- check the fan elements.
- check whether the ambient temperature is in the permissible range.
- check the motor load.
- reduce the pulse frequency if this is higher than the rated pulse frequency.

Notice:
This fault can only be acknowledged after this alarm threshold for alarm A05000 has been undershot.
See also: p1800 (Pulse frequency setpoint)

F30005 Power unit: Overload I2t

Message value: %1

Drive object: B_INF

Reaction: OFF2

Acknowledge: IMMEDIATELY

Cause: The power unit was overloaded (r0036 = 100 %).
- the permissible rated power unit current was exceeded for an inadmissibly long time.
- the permissible load duty cycle was not maintained.

Fault value (r0949, interpret decimal):
I2t [100 % = 16384].

Remedy: - reduce the continuous load.
- adapt the load duty cycle.
- check the motor and power unit rated currents.

See also: r0036 (Power unit overload I2t), r0206 (Rated power unit power), p0307 (Rated motor power)

© Siemens AG 2012 All Rights Reserved

F30005 Power unit: Overload I2t

Message value: %1

Drive object: VECTOR_G

Reaction: OFF2

Acknowledge: IMMEDIATELY

Cause: The power unit was overloaded (r0036 = 100 %).
- the permissible rated power unit current was exceeded for an inadmissibly long time.
- the permissible load duty cycle was not maintained.
Fault value (r0949, interpret decimal):
I2t [100 % = 16384].

Remedy: - reduce the continuous load.
- adapt the load duty cycle.
- check the motor and power unit rated currents.
- increase p0294
See also: r0036 (Power unit overload I2t), r0206 (Rated power unit power), p0307 (Rated motor power)

F30006 Power unit: Thyristor Control Board

Message value: -

Drive object: B_INF, VECTOR_G

Reaction: OFF2

Acknowledge: IMMEDIATELY

Cause: The Thyristor Control Board (TCB) of the Basic Line Module signals a fault.
- there is no line supply voltage.
- the line contactor is not closed.
- the line supply voltage is too low.
- line supply frequency outside the permissible range (45 ... 66 Hz).
- there is a DC link short-circuit.
- there is a DC link short-circuit (during the pre-charging phase).
- voltage supply for the Thyristor Control Board outside the nominal range (5 ... 18 V) and line voltage >30 V.
- there is an internal fault in the Thyristor Control Board.

Remedy: The faults must be saved in the Thyristor Control Board and must be acknowledged. To do this, the supply voltage of the Thyristor Control Board must be switched out for at least 10 s!
- check the line supply voltage
- check or energize the line contactor.
- check the monitoring time and, if required, increase (p0857).
- if required, observe additional power unit messages/signals.
- check the DC link regarding short-circuit or ground fault.
- evaluate diagnostic LEDs for the Thyristor Control Board.

F30008 Power unit: Sign-of-life error cyclic data

Message value: -

Drive object: B_INF, VECTOR_G

Reaction: Infeed: NONE (OFF1, OFF2)
Vector: NONE (OFF1, OFF2, OFF3)

Acknowledge: IMMEDIATELY

Cause: The Control Unit has not punctually updated the cyclic setpoint telegram. The number of consecutive sign-of-life errors has exceeded the fault threshold (p7789).

Remedy: - check the electrical cabinet design and cable routing for EMC compliance
- for projects with the VECTOR drive object, check whether p0117 = 6 has been set on the Control Unit.
- increase the fault threshold (p7789).
See also: p0117 (Current controller computing dead time mode)

© Siemens AG 2012 All Rights Reserved

A30010 (F) Power unit: Sign-of-life error cyclic data

Message value: -
Drive object: B_INF, VECTOR_G
Reaction: NONE
Acknowledge: NONE
Cause: A DRIVE-CLiQ communication error has occurred between the Control Unit and the power unit involved.
The cyclic setpoint telegrams of the Control Unit were not received on time by the power unit for at least one clock cycle.
Remedy: Check the electrical cabinet design and cable routing for EMC compliance.
Reaction upon F: Infeed: NONE (OFF1, OFF2)
Vector: NONE (OFF1, OFF2, OFF3)
Acknowl. upon F: IMMEDIATELY (POWER ON)

F30011 Power unit: Line phase failure in main circuit

Message value: %1
Drive object: B_INF, VECTOR_G
Reaction: OFF2 (OFF1)
Acknowledge: IMMEDIATELY
Cause: At the power unit, the DC link voltage ripple has exceeded the permissible limit value.
Possible causes:
- A line phase has failed.
- The 3 line phases are inadmissibly unsymmetrical.
- the fuse of a phase of a main circuit has ruptured.
- A motor phase has failed.

Fault value (r0949, interpret decimal):
Only for internal Siemens troubleshooting.
Remedy:
- check the main circuit fuses.
- Check whether a single-phase load is distorting the line voltages.
- check the motor feeder cables.

F30012 Power unit: Temperature sensor heat sink wire breakage

Message value: %1
Drive object: B_INF, VECTOR_G
Reaction: OFF1 (OFF2)
Acknowledge: IMMEDIATELY
Cause: The connection to a heat sink temperature sensor in the power unit is interrupted.
Fault value (r0949, interpret hexadecimal):
Bit 0: Module slot (electronics slot)
Bit 1: Air intake
Bit 2: Inverter 1
Bit 3: Inverter 2
Bit 4: Inverter 3
Bit 5: Inverter 4
Bit 6: Inverter 5
Bit 7: Inverter 6
Bit 8: Rectifier 1
Bit 9: Rectifier 2
Remedy: Contact the manufacturer.

F30013 Power unit: Temperature sensor heat sink short-circuit

Message value: %1
Drive object: B_INF, VECTOR_G
Reaction: OFF1 (OFF2)
Acknowledge: IMMEDIATELY
Cause: The heat sink temperature sensor in the power unit is short-circuited.

© Siemens AG 2012 All Rights Reserved

Fault value (r0949, interpret hexadecimal):
Bit 0: Module slot (electronics slot)
Bit 1: Air intake
Bit 2: Inverter 1
Bit 3: Inverter 2
Bit 4: Inverter 3
Bit 5: Inverter 4
Bit 6: Inverter 5
Bit 7: Inverter 6
Bit 8: Rectifier 1
Bit 9: Rectifier 2

Remedy: Contact the manufacturer.

F30015 (N, A) Power unit: Phase failure motor cable

Message value: -

Drive object: VECTOR_G

Reaction: OFF2 (NONE, OFF1, OFF3)

Acknowledge: IMMEDIATELY

Cause: A phase failure in the motor feeder cable was detected.
The signal can also be output in the following cases:
- The motor is correctly connected, but the drive has stalled in U/f control. In this case, a current of 0 A is possibly measured in one phase due to asymmetry of the currents.
- the motor is correctly connected, however the closed-speed control is instable and therefore an oscillating torque is generated.
Note:
Chassis power units do not feature phase failure monitoring.

Remedy: - check the motor feeder cables.
- increase the ramp-up or ramp-down time (p1120) if the drive has stalled in U/f control.
- check the speed controller settings.

Reaction upon N: NONE

Acknowl. upon N: NONE

Reaction upon A: NONE

Acknowl. upon A: NONE

A30016 (N) Power unit: Load supply switched out

Message value: %1

Drive object: VECTOR_G

Reaction: NONE

Acknowledge: NONE

Cause: The DC link voltage is too low.
Alarm value (r2124, interpret decimal):
DC link voltage at the time of trip [0.1 V].

Remedy: - switch on load supply.
- check the line supply if necessary.

Reaction upon N: NONE

Acknowl. upon N: NONE

F30017 Power unit: Hardware current limit has responded too often

Message value: Fault cause: %1 bin

Drive object: B_INF, VECTOR_G

Reaction: OFF2

Acknowledge: IMMEDIATELY

Cause: The hardware current limitation in the relevant phase (see A30031, A30032, A30033) has responded too often. The number of times the limit has been exceeded depends on the design and type of power unit.
For infeed units, the following applies:
- closed-loop control is incorrectly parameterized.
- load on the infeed is too high.
- Voltage Sensing Module incorrectly connected.

© Siemens AG 2012 All Rights Reserved

- line reactor missing or the incorrect type.
- power unit defective.
The following applies to Motor Modules:
- closed-loop control is incorrectly parameterized.
- fault in the motor or in the power cables.
- the power cables exceed the maximum permissible length.
- motor load too high
- power unit defective.
Fault value (r0949, interpret binary):
Bit 0: Phase U
Bit 1: Phase V
Bit 2: Phase W

Remedy: For infeed units, the following applies:
- check the controller settings and reset and identify the controller if necessary (p0340 = 2, p3410 = 5)
- reduce the load and increase the DC-link capacitance or use a higher-rating infeed if necessary
- check the connection of the optional Voltage Sensing Module
- check the connection and technical data of the line reactor
- check the power cables for short-circuit or ground fault.
- replace power unit.
The following applies to Motor Modules:
- check the motor data and if required, recalculate the controller parameters (p0340 = 3). As an alternative, run a motor data identification (p1910 = 1, p1960 = 1).
- check the motor circuit configuration (star-delta).
- check the motor load.
- check the power cable connections.
- check the power cables for short-circuit or ground fault.
- check the length of the power cables.
- replace power unit.

F30020 Power unit: Configuration not supported

Message value: fault cause: %1, additional information: %2

Drive object: B_INF, VECTOR_G

Reaction: OFF2

Acknowledge: IMMEDIATELY

Cause: A configuration is requested that is not supported by the power unit.
Fault value (r0949, interpret hexadecimal):
yyyyxxxx hex: xxxx = fault cause, yyyy = additional information (siemensintern)
xxxx = 0: Autonomous operation is requested but is not supported.
xxxx = 1: The requested DRIVE-CLiQ timing is not permissible.
xxxx = 2: A PM260 has been detected with PS-ASIC version 2. This combination is not supported.
xxxx = 3: Initialization was not able to be successfully completed. It is possible that the Control Unit was withdrawn from the power module before or during power-up.
xxxx = 4: The combination of power unit and Control Unit or Control Unit Adapter is not supported.
xxxx = 5: The higher current controller dynamic performance is not supported.

Remedy: Re fault cause = 0:
If required, deactivate an active internal voltage protection (p1231).
Re fault cause = 1:
Update the Control Unit firmware or change the DRIVE-CLiQ topology.
Re fault cause = 2:
Replace the power unit with a PM260 with PS-ASIC version 3 (or higher).
Re fault cause = 3, 4:
Insert a Control Unit or Control Unit Adapter (CUAxx) on an appropriate Power Module and perform a POWER ON for the Control Unit or the Control Units Adapter.
Re fault cause = 5:
- use a booksize format power unit.
- for a Double Motor Module operate the two drive controls with the same current controller sampling time (p0115[0]). Otherwise, the higher current controller dynamics can only be activated on the drive with the longer sampling time.
- If required, de-select the higher current controller dynamic performance (p1810.11 = 0). After deselecting the computing dead time, recalculate the controller gains (p0340 = 4). If required, optimize the speed controller.
See also: p0115, p1231, p1810

© Siemens AG 2012 All Rights Reserved

F30021 Power unit: Ground fault

Message value: %1

Drive object: B_INF, VECTOR_G

Reaction: OFF2

Acknowledge: IMMEDIATELY

Cause: Power unit has detected a ground fault.
- ground fault in the power cables.
- winding fault or ground fault at the motor.
- CT defective.

Additional cause for CU310/CUA31:
- when the brake is applied, this causes the hardware DC current monitoring to respond.

Additional cause for parallel switching devices (r0108.15 = 1):
- the closed-loop circulating current control is either too slow or has been set too fast.

Fault value (r0949, interpret decimal):
Absolute value, total current amplitude [20479 = r0209 x 1.4142].
Note:
For power units, a ground fault is also emulated in r3113.5.

Remedy: - check the power cable connections.
- check the motor.
- check the CT.

The following applies additionally for CU310/CUA31:
- check the cables and contacts of the brake connection (a wire is possibly broken).

For parallel switching devices (r0108.15 = 1) the following additionally applies:
- check the ground fault monitoring thresholds (p0287).
- check the setting of the closed-loop circulating current control (p7036, p7037).

See also: p0287 (Ground fault monitoring thresholds)

F30022 Power unit: Monitoring U_ce

Message value: Fault cause: %1 bin

Drive object: B_INF, VECTOR_G

Reaction: OFF2

Acknowledge: POWER ON

Cause: In the power unit, the monitoring of the collector-emitter voltage (U_ce) of the semiconductor has responded.
Possible causes:
- fiber-optic cable interrupted.
- power supply of the IGBT gating module missing.
- short-circuit at the power unit output.
- defective semiconductor in the power unit.

Fault value (r0949, interpret binary):
Bit 0: Short-circuit in phase U
Bit 1: Short circuit in phase V
Bit 2: Short-circuit in phase W
Bit 3: Light transmitter enable defective
Bit 4: U_ce group fault signal interrupted
See also: r0949 (Fault value)

Remedy: - check the fiber-optic cable and if required, replace.
- check the power supply of the IGBT gating module (24 V).
- check the power cable connections.
- select the defective semiconductor and replace.

F30024 Power unit: Overtemperature thermal model

Message value: -

Drive object: B_INF

Reaction: OFF2

Acknowledge: IMMEDIATELY

Cause: The temperature difference between the heat sink and chip has exceeded the permissible limit value.
- the permissible load duty cycle was not maintained.
- insufficient cooling, fan failure.
- overload.

© Siemens AG 2012 All Rights Reserved

- ambient temperature too high.
- pulse frequency too high.
See also: r0037

Remedy:
- adapt the load duty cycle.
- check whether the fan is running.
- check the fan elements.
- check whether the ambient temperature is in the permissible range.
- check the motor load.
- reduce the pulse frequency if this is higher than the rated pulse frequency.

F30024 Power unit: Overtemperature thermal model

Message value: -

Drive object: VECTOR_G

Reaction: OFF2

Acknowledge: IMMEDIATELY

Cause: The temperature difference between the heat sink and chip has exceeded the permissible limit value.
- the permissible load duty cycle was not maintained.
- insufficient cooling, fan failure.
- overload.
- ambient temperature too high.
- pulse frequency too high.
See also: r0037

Remedy:
- adapt the load duty cycle.
- check whether the fan is running.
- check the fan elements.
- check whether the ambient temperature is in the permissible range.
- check the motor load.
- reduce the pulse frequency if this is higher than the rated pulse frequency.
- if DC braking is active: reduce braking current (p1232).

F30025 Power unit: Chip overtemperature

Message value: %1

Drive object: B_INF, VECTOR_G

Reaction: OFF2

Acknowledge: IMMEDIATELY

Cause: The chip temperature of the semiconductor has exceeded the permissible limit value.
- the permissible load duty cycle was not maintained.
- insufficient cooling, fan failure.
- overload.
- ambient temperature too high.
- pulse frequency too high.
Fault value (r0949, interpret decimal):
Temperature difference between the heat sink and chip [0.01 °C].

Remedy:
- adapt the load duty cycle.
- check whether the fan is running.
- check the fan elements.
- check whether the ambient temperature is in the permissible range.
- check the motor load.
- reduce the pulse frequency if this is higher than the rated pulse frequency.
Notice:
This fault can only be acknowledged after this alarm threshold for alarm A05001 has been undershot.
See also: r0037

© Siemens AG 2012 All Rights Reserved

F30027 Power unit: Precharging DC link time monitoring

Message value: Enable signals: %1, Status: %2

Drive object: B_INF, VECTOR_G

Reaction: OFF2

Acknowledge: IMMEDIATELY

Cause: The power unit DC link was not able to be pre-charged within the expected time.
1) There is no line supply voltage connected.
2) The line contactor/line side switch has not been closed.
3) The line supply voltage is too low.
4) Line supply voltage incorrectly set (p0210).
5) The pre-charging resistors are overheated as there were too many pre-charging operations per time unit.
6) The pre-charging resistors are overheated as the DC link capacitance is too high.
7) The pre-charging resistors are overheated because when there is no "ready for operation" (r0863.0) of the infeed unit, power is taken from the DC link.
8) The pre-charging resistors are overheated as the line contactor was closed during the DC link fast discharge through the Braking Module.
9) The DC link has either a ground fault or a short-circuit.
10) The pre-charging circuit is possibly defective (only for chassis units).
11) Infeed is defective and/or fuse has ruptured in the Motor Module (only Booksize units).
Fault value (r0949, interpret binary):
yyyyxxxx hex:
yyyy = power unit state
0: Fault status (wait for OFF and fault acknowledgement).
1: Restart inhibit (wait for OFF).
2: Overvoltage condition detected -> change into the fault state.
3: Undervoltage condition detected -> change into the fault state.
4: Wait for bridging contactor to open -> change into the fault state.
5: Wait for bridging contactor to open -> change into restart inhibit.
6: Commissioning.
7: Ready for pre-charging.
8: Pre-charging started, DC link voltage less than the minimum switch-on voltage.
9: Pre-charging, DC link voltage end of pre-charging still not detected.
10: Wait for the end of the de-bounce time of the main contactor after pre-charging has been completed.
11: Pre-charging completed, ready for pulse enable.
12: It was detected that the STO terminal was energized at the power unit.
xxxx = Missing internal enable signals, power unit (inverted bit-coded, FFFF hex -> all internal enable signals available)
Bit 0: Power supply of the IGBT gating shut down.
Bit 1: Ground fault detected.
Bit 2: Peak current intervention.
Bit 3: I2t exceeded.
Bit 4. Thermal model overtemperature calculated.
Bit 5: (heat sink, gating module, power unit) overtemperature measured.
Bit 6: Reserved.
Bit 7: Overvoltage detected.
Bit 8: Power unit has completed pre-charging, ready for pulse enable.
Bit 9: STO terminal missing.
Bit 10: Overcurrent detected.
Bit 11: Armature short-circuit active.
Bit 12: DRIVE-CLiQ fault active.
Bit 13: Vce fault detected, transistor de-saturated due to overcurrent/short-circuit.
Bit 14: Undervoltage detected.
See also: p0210 (Drive unit line supply voltage)

Remedy: In general:
- check the line supply voltage at the input terminals.
- check the line supply voltage setting (p0210).
For booksize drive units, the following applies:
- wait (approx. 8 minutes) until the pre-charging resistors have cooled down. For this purpose, preferably disconnect the infeed unit from the line supply.
Re 5):
- carefully observe the permissible pre-charging frequency (refer to the appropriate Equipment Manual).

© Siemens AG 2012 All Rights Reserved

Re 6):
- check the total capacitance of the DC link and reduce in accordance with the maximum permissible DC-link capacitance if necessary (refer to the appropriate Equipment Manual)
Re 7):
- interconnect the ready-for-operation signal from the infeed unit (r0863.0) in the enable logic of the drives connected to this DC link
Re 8):
- check the connections of the external line contactor. The line contactor must be open during DC-link fast discharge.
Re 9):
- check the DC link for ground faults or short circuits.
Re 11):
- Check the DC link voltage of the infeed (r0070) and Motor Modules (r0070).
If the DC link voltage generated by the infeed (or external) is not displayed for the Motor Modules (r0070), then a fuse has ruptured in the Motor Module.
See also: p0210 (Drive unit line supply voltage)

A30031 Power unit: Hardware current limiting, phase U

Message value: -

Drive object: B_INF, VECTOR_G

Reaction: NONE

Acknowledge: NONE

Cause: Hardware current limit for phase U responded. The pulsing in this phase is inhibited for one pulse period.
- closed-loop control is incorrectly parameterized.
- fault in the motor or in the power cables.
- the power cables exceed the maximum permissible length.
- motor load too high
- power unit defective.
Note:
Alarm A30031 is always output if, for a Power Module, the hardware current limiting of phase U, V or W responds.

Remedy: - check the motor data and if required, recalculate the control parameters (p0340 = 3). As an alternative, run a motor data identification (p1910 = 1, p1960 = 1).
- check the motor circuit configuration (star/delta).
- check the motor load.
- check the power cable connections.
- check the power cables for short-circuit or ground fault.
- check the length of the power cables.

A30032 Power unit: Hardware current limiting, phase V

Message value: -

Drive object: B_INF, VECTOR_G

Reaction: NONE

Acknowledge: NONE

Cause: Hardware current limit for phase V responded. The pulsing in this phase is inhibited for one pulse period.
- closed-loop control is incorrectly parameterized.
- fault in the motor or in the power cables.
- the power cables exceed the maximum permissible length.
- motor load too high
- power unit defective.
Note:
Alarm A30031 is always output if, for a Power Module, the hardware current limiting of phase U, V or W responds.

Remedy: Check the motor data and if required, recalculate the control parameters (p0340 = 3). As an alternative, run a motor data identification (p1910 = 1, p1960 = 1).
- check the motor circuit configuration (star/delta).
- check the motor load.
- check the power cable connections.
- check the power cables for short-circuit or ground fault.
- check the length of the power cables.

© Siemens AG 2012 All Rights Reserved

A30033 Power unit: Hardware current limiting, phase W

Message value: -

Drive object: B_INF, VECTOR_G

Reaction: NONE

Acknowledge: NONE

Cause: Hardware current limit for phase W responded. The pulsing in this phase is inhibited for one pulse period.
- closed-loop control is incorrectly parameterized.
- fault in the motor or in the power cables.
- the power cables exceed the maximum permissible length.
- motor load too high
- power unit defective.

Note:
Alarm A30031 is always output if, for a Power Module, the hardware current limiting of phase U, V or W responds.

Remedy: - check the motor data and if required, recalculate the control parameters (p0340 = 3). As an alternative, run a motor data identification (p1910 = 1, p1960 = 1).
- check the motor circuit configuration (star/delta).
- check the motor load.
- check the power cable connections.
- check the power cables for short-circuit or ground fault.
- check the length of the power cables.

A30034 Power unit: Internal overtemperature

Message value: %1

Drive object: B_INF, VECTOR_G

Reaction: NONE

Acknowledge: NONE

Cause: The alarm threshold for internal overtemperature has been reached.
If the temperature inside the unit continues to increase, fault F30036 may be triggered.
- ambient temperature might be too high.
- insufficient cooling, fan failure.

Fault value (r0949, interpret decimal):
Only for internal Siemens troubleshooting.

Remedy: - check the ambient temperature.
- check the fan for the inside of the unit.

F30035 Power unit: Air intake overtemperature

Message value: %1

Drive object: B_INF, VECTOR_G

Reaction: OFF1 (OFF2)

Acknowledge: IMMEDIATELY

Cause: The air intake in the power unit has exceeded the permissible temperature limit.
For air-cooled power units, the temperature limit is at 55 °C.
- ambient temperature too high.
- insufficient cooling, fan failure.

Fault value (r0949, interpret decimal):
Temperature [0.01 °C].

Remedy: - check whether the fan is running.
- check the fan elements.
- check whether the ambient temperature is in the permissible range.

Notice:
This fault can only be acknowledged after this alarm threshold for alarm A05002 has been undershot.

© Siemens AG 2012 All Rights Reserved

F30036 Power unit: Internal overtemperature

Message value: %1
Drive object: All objects
Reaction: OFF2
Acknowledge: IMMEDIATELY
Cause: The temperature inside the drive converter has exceeded the permissible temperature limit.
- insufficient cooling, fan failure.
- overload.
- ambient temperature too high.

Fault value (r0949, interpret decimal):
Only for internal Siemens troubleshooting.

Remedy:
- check whether the fan is running.
- check the fan elements.
- check whether the ambient temperature is in the permissible range.

Notice:
This fault can only be acknowledged once the permissible temperature limit minus 5 K has been fallen below.

F30037 Power unit: Rectifier overtemperature

Message value: %1
Drive object: B_INF, VECTOR_G
Reaction: OFF2
Acknowledge: IMMEDIATELY
Cause: The temperature in the rectifier of the power unit has exceeded the permissible temperature limit.
- insufficient cooling, fan failure.
- overload.
- ambient temperature too high.
- line supply phase failure.

Fault value (r0949, interpret decimal):
Temperature [0.01 °C].

Remedy:
- check whether the fan is running.
- check the fan elements.
- check whether the ambient temperature is in the permissible range.
- check the motor load.
- check the line supply phases.

Notice:
This fault can only be acknowledged after this alarm threshold for alarm A05004 has been undershot.

A30038 Power unit: Capacitor fan monitoring

Message value: %1
Drive object: B_INF
Reaction: NONE
Acknowledge: NONE
Cause: The capacitor fan signals a fault.
Remedy: Replace the capacitor fan in the power unit.

F30039 Power unit: Failure capacitor fan

Message value: %1
Drive object: B_INF
Reaction: OFF1
Acknowledge: IMMEDIATELY
Cause: The capacitor fan has failed.
Remedy: Replace the capacitor fan in the power unit.

© Siemens AG 2012 All Rights Reserved

F30040 Power unit: Undervolt 24 V

Message value: %1
Drive object: B_INF, VECTOR_G
Reaction: OFF2
Acknowledge: IMMEDIATELY (POWER ON)
Cause: Failure of the 24 V power supply for the power unit.
- The undervoltage threshold was undershot for longer than 3 ms.
Fault value (r0949, interpret decimal):
24 V voltage [0.1 V].

Remedy: - Check the power supply of the power unit.
- carry out a POWER ON (power off/on) for the component.

A30041 (F) Power unit: Undervoltage 24 V alarm

Message value: %1
Drive object: B_INF
Reaction: NONE
Acknowledge: NONE
Cause: For the power unit power supply, the lower threshold has been violated.
Alarm value (r2124, interpret hexadecimal):
Only for internal Siemens troubleshooting.

Remedy: - Check the power supply of the power unit.
- carry out a POWER ON (power off/on) for the component.

Reaction upon F: Infeed: NONE (OFF1, OFF2)
Vector: NONE (OFF1, OFF2, OFF3)
Acknowl. upon F: IMMEDIATELY (POWER ON)

A30041 (F) Power unit: Undervoltage 24 V alarm

Message value: %1
Drive object: VECTOR_G
Reaction: NONE
Acknowledge: NONE
Cause: For the power unit power supply, the lower threshold has been violated.
Alarm value (r2124, interpret decimal):
24 V voltage [0.1 V].

Remedy: - Check the power supply of the power unit.
- carry out a POWER ON (power off/on) for the component.

Reaction upon F: Infeed: NONE (OFF1, OFF2)
Vector: NONE (OFF1, OFF2, OFF3)
Acknowl. upon F: IMMEDIATELY (POWER ON)

A30042 Power unit: Fan operating time reached or exceeded

Message value: %1
Drive object: B_INF, VECTOR_G
Reaction: NONE
Acknowledge: NONE
Cause: The maximum operating time of the fan in the power unit is set in p0252.
This message indicates the following:
Fault value (r0949, interpret decimal):
0: The maximum fan operating time is 500 hours.
1: The maximum fan operating time has been exceeded.

Remedy: Replace the fan in the power unit and reset the operating hours counter to 0 (p0251 = 0).
See also: p0251 (Operating hours counter power unit fan), p0252 (Maximum operating time power unit fan)

© Siemens AG 2012 All Rights Reserved

F30043 Power unit: Overvolt 24 V

Message value: %1
Drive object: B_INF, VECTOR_G
Reaction: OFF2
Acknowledge: POWER ON
Cause: For the power unit power supply, the upper threshold has been violated.
Fault value (r0949, interpret decimal):
24 V voltage [0.1 V].
Remedy: Check the power supply of the power unit.

A30044 (F) Power unit: Overvoltage 24 V alarm

Message value: %1
Drive object: B_INF
Reaction: NONE
Acknowledge: NONE
Cause: For the power unit power supply, the upper threshold has been violated.
Alarm value (r2124, interpret decimal):
Only for internal Siemens troubleshooting.
Remedy: Check the power supply of the power unit.
Reaction upon F: Infeed: NONE (OFF1, OFF2)
Vector: NONE (OFF1, OFF2, OFF3)
Acknowl. upon F: IMMEDIATELY (POWER ON)

A30044 (F) Power unit: Overvoltage 24 V alarm

Message value: %1
Drive object: VECTOR_G
Reaction: NONE
Acknowledge: NONE
Cause: For the power unit power supply, the upper threshold has been violated.
Alarm value (r2124, interpret decimal):
24 V voltage [0.1 V].
Remedy: Check the power supply of the power unit.
Reaction upon F: Infeed: NONE (OFF1, OFF2)
Vector: NONE (OFF1, OFF2, OFF3)
Acknowl. upon F: IMMEDIATELY (POWER ON)

F30045 Power unit: Supply undervoltage

Message value: %1
Drive object: B_INF, VECTOR_G
Reaction: OFF2
Acknowledge: IMMEDIATELY (POWER ON)
Cause: Power supply fault in the power unit.
- The voltage monitor signals an undervoltage fault on the module.
The following applies for CU31x:
- the voltage monitoring on the DAC board signals an undervoltage fault on the module.
Remedy: - Check the power supply of the power unit.
- carry out a POWER ON (power off/on) for the component.
- replace the module if necessary.

© Siemens AG 2012 All Rights Reserved

A30046 (F) Power unit: Undervoltage, alarm

Message value: %1
Drive object: B_INF
Reaction: NONE
Acknowledge: NONE
Cause: Before the last restart, a problem occurred at the power unit power supply.
- the voltage monitor in the internal FPGA of the PSA signals an undervoltage fault on the module.
Alarm value only for internal diagnostics

Remedy: - check the 24 V DC voltage supply to power unit.
- carry out a POWER ON (power off/on) for the component.
- replace the module if necessary.

Reaction upon F: Infeed: NONE (OFF1, OFF2)
Vector: NONE (OFF1, OFF2, OFF3)

Acknowl. upon F: IMMEDIATELY (POWER ON)

A30046 (F) Power unit: Undervoltage, alarm

Message value: %1
Drive object: VECTOR_G
Reaction: NONE
Acknowledge: NONE
Cause: Before the last restart, a problem occurred at the power unit power supply.
- the voltage monitor in the internal FPGA of the PSA signals an undervoltage fault on the module.
Fault value (r0949, interpret decimal):
Register value of the voltage fault register.

Remedy: - check the 24 V DC voltage supply to power unit.
- carry out a POWER ON (power off/on) for the component.
- replace the module if necessary.

Reaction upon F: Infeed: NONE (OFF1, OFF2)
Vector: NONE (OFF1, OFF2, OFF3)

Acknowl. upon F: IMMEDIATELY (POWER ON)

F30047 Cooling unit: Cooling medium flow rate too low

Message value: %1
Drive object: B_INF, VECTOR_G
Reaction: OFF2
Acknowledge: IMMEDIATELY
Cause: The flowrate of the cooling unit has fallen below the fault threshold.
Remedy: - Check the feedback signals and parameter assignment (p0260 ... p0267).
- Check the coolant feed.

A30048 Power unit: External fan faulty

Message value: -
Drive object: B_INF, VECTOR_G
Reaction: NONE
Acknowledge: NONE
Cause: The feedback signal from the external fan indicates a fault.
- fan faulty, blocked.
- feedback signal inaccurate.

Remedy: - check the external fan and replace if necessary.
- if you are using an external fan with feedback, check its wiring (X12.2 or X13.2).
Note:
If you are using an external fan without feedback, check that the feedback terminal wiring on the power unit is connected to ground and make this connection if necessary (X12.1/2 or X13.1/2).

© Siemens AG 2012 All Rights Reserved

A30049 Power unit: Internal fan faulty

Message value: -
Drive object: B_INF, VECTOR_G
Reaction: NONE
Acknowledge: NONE
Cause: The internal fan has failed.
Remedy: Check the internal fan and replace if necessary.

F30050 Power unit: 24 V supply overvoltage

Message value: -
Drive object: B_INF, VECTOR_G
Reaction: OFF2
Acknowledge: POWER ON
Cause: The voltage monitor signals an overvoltage fault on the module.
Remedy: - check the 24 V power supply.
- replace the module if necessary.

F30052 EEPROM data error

Message value: %1
Drive object: B_INF, VECTOR_G
Reaction: OFF2
Acknowledge: POWER ON
Cause: EEPROM data error of the power unit module.
Fault value (r0949, interpret decimal):
0, 2, 3, 4:
The EEPROM data read in from the power unit module are incorrect.
1:
EEPROM data is not compatible to the firmware of the power unit application.
Additional values:
Only for internal Siemens troubleshooting.
Remedy: Re fault value = 0, 2, 3, 4:
Replace the power unit module or update the EEPROM data.
For fault value = 1:
The following applies for CU31x and CUA31:
Update the firmware \SIEMENS\SINAMICS\CODE\SAC\cu31xi.ufw (cua31.ufw)

F30053 FPGA data faulty

Message value: %1
Drive object: All objects
Reaction: NONE
Acknowledge: POWER ON
Cause: The FPGA data of the power unit are faulty.
Remedy: Replace the power unit or update the FPGA data.

A30054 (F) Power unit: Undervoltage when opening the brake

Message value: %1
Drive object: VECTOR_G
Reaction: NONE
Acknowledge: NONE
Cause: When the brake is being opened, it is detected that the power supply voltage is less than 24 V - 10% = 21.6V.
Alarm value (r2124, interpret decimal):
Supply voltage fault [0.1 V].
Example:
Alarm value = 195 --> voltage = 19.5 V
Remedy: Check the 24 V voltage for stability and value.

© Siemens AG 2012 All Rights Reserved

Reaction upon F: NONE (OFF1, OFF2, OFF3)
Acknowl. upon F: IMMEDIATELY

F30055 Power unit: Braking chopper overcurrent

Message value: -
Drive object: B_INF, VECTOR_G
Reaction: OFF2
Acknowledge: IMMEDIATELY
Cause: An overcurrent condition has occurred in the braking chopper.
Remedy: - check whether the braking resistor has a short circuit.
- for an external braking resistor, check whether the resistor may have been dimensioned too small.
Note:
The braking chopper is only enabled again at pulse enable after the fault has been acknowledged.

A30057 Power unit: Line asymmetry

Message value: %1
Drive object: B_INF, VECTOR_G
Reaction: NONE
Acknowledge: NONE
Cause: Frequencies have been detected on the DC link voltage that would suggest line asymmetry or failure of a line phase.
It is also possible that a motor phase has failed.
Fault F30011 is output if the alarm is present and at the latest after 5 minutes.
The precise duration depends on the power unit type and the particular frequencies.
Alarm value (r2124, interpret decimal):
Only for internal Siemens troubleshooting.
Remedy: - check the line phase connection.
- check the motor feeder cable connections.
If there is no phase failure of the line or motor, then line asymmetry is involved.
- reduce the power in order to avoid fault F30011.

F30059 Power unit: Internal fan faulty

Message value: -
Drive object: B_INF, VECTOR_G
Reaction: OFF2
Acknowledge: IMMEDIATELY
Cause: The internal power unit fan has failed and is possibly defective.
Remedy: Check the internal fan and replace if necessary.

F30060 (A) Pre-charge contactor state monitoring

Message value: Fault cause: %1 bin
Drive object: B_INF, VECTOR_G
Reaction: OFF2 (NONE, OFF1)
Acknowledge: IMMEDIATELY (POWER ON)
Cause: A feedback signal for the pre-charging contactor (ALM, SLM, BLM diode) or the line contactor (BLM thyristor) interconnected and the monitoring activated.
After switching-in/switching-out the contactor, a correct feedback signal was not received within the monitoring time set in p0255[0].
Fault value (r0949, interpret binary):
Bit 0: The time set in p0255[0] was exceeded when switching-in/switching-out the contactor.
Bit 1: The pre-charging contactor was opened while pre-charging or in the infeed mode (BLM thyristor).
Bit 2: The pre-charging contactor was switched-in in the OFF state or during infeed operation.
Remedy: - check the monitoring time setting (p0255[0]).
- check the contactor wiring and activation.
- replace the contactor.
Reaction upon A: NONE
Acknowl. upon A: NONE

© Siemens AG 2012 All Rights Reserved

F30061 (A) Bridging contactor monitoring

Message value: Fault cause: %1 bin

Drive object: B_INF, VECTOR_G

Reaction: OFF2 (NONE, OFF1)

Acknowledge: IMMEDIATELY (POWER ON)

Cause: A feedback signal for the bypass contactor is interconnected and the monitoring activated.
After switching-in/switching-out the contactor, a correct feedback signal was not received within the monitoring time set in p0255[1].
Fault value (r0949, interpret binary):
Bit 0: The time set in p0255[1] was exceeded when switching-in/switching-out the contactor.
Bit 1: The bypass contactor was opened in operation.
Bit 2: The bypass contactor was switched-in in the OFF state or during pre-charging.

Remedy: - check the monitoring time setting (p0255[1]).
- check the contactor wiring and activation.
- replace the contactor.

Reaction upon A: NONE

Acknowl. upon A: NONE

F30070 Cycle requested by the power unit module not supported

Message value: %1

Drive object: B_INF, VECTOR_G

Reaction: OFF2

Acknowledge: IMMEDIATELY

Cause: A cycle is requested that is not supported by the power unit.
Fault value (r0949, interpret hexadecimal):
0: The current control cycle is not supported.
1: The DRIVE-CLiQ cycle is not supported.
2: Internal timing problem (clearance between RX and TX instants too low).
3: Internal timing problem (TX instant too early).

Remedy: The power unit only supports the following cycles:
62.5 µs, 125 µs, 250 µs and 500 µs
For fault value = 0:
Set a permitted current control cycle.
For fault value = 1:
Set a permitted DRIVE-CLiQ cycle.
Re fault value = 2, 3:
Contact the manufacturer (you may have an incompatible firmware version).

F30071 No new actual values received from the power unit module

Message value: -

Drive object: B_INF, VECTOR_G

Reaction: OFF2

Acknowledge: IMMEDIATELY

Cause: The number of actual value telegrams from the power unit module that have failed has exceeded the permissible number.

Remedy: Check the interface (adjustment and locking) to the power unit module.

F30072 Setpoints are no longer being transferred to the power unit

Message value: -

Drive object: B_INF, VECTOR_G

Reaction: OFF2

Acknowledge: IMMEDIATELY

Cause: The following applies for CU31x and CUA31:
More than one setpoint telegram was not able to be transferred to the power unit module.

Remedy: The following applies for CU31x and CUA31:
Check the interface (adjustment and locking) to the power unit module.

© Siemens AG 2012 All Rights Reserved

A30073 (N) Actual value/setpoint preprocessing no longer synchronous

Message value: -
Drive object: B_INF, VECTOR_G
Reaction: NONE
Acknowledge: NONE
Cause: Communication with the power unit module is no longer in synchronism with the current control cycle.
Remedy: Wait until synchronization is re-established.
Reaction upon N: NONE
Acknowl. upon N: NONE

F30074 (A) Communication error between the Control Unit and Power Module

Message value: %1
Drive object: B_INF, VECTOR_G
Reaction: NONE
Acknowledge: IMMEDIATELY
Cause: Communications between the Control Unit (CU) and Power Module (PM) via the interface no longer possible. The CU may have been withdrawn or is incorrectly inserted.
Fault value (r0949, interpret hexadecimal):
0 hex:
The Control Unit was withdrawn from the Power Module during operation.
1 hex:
The Control Unit was withdrawn from the Power Module during operation, although the encoderless safe motion monitoring functions are enabled. This is not supported. After re-inserting the Control Unit in operation, communications to the Power Module no longer possible.
20A hex:
The Control Unit was inserted on a Power Module, which has another code number.
20B hex:
The Control Unit was inserted on a Power Module, which although it has the same code number, has a different serial number.
601 hex:
The Control Unit was inserted on a Power Module, whose power/performance class (chassis unit) is not supported.
Remedy: Reinsert the Control Unit (CU) or the Control Unit adapter (CUAxx) onto the original Power Module and continue operation. If required, carry out a POWER ON for the CU and/or the CUA.
Reaction upon A: NONE
Acknowl. upon A: NONE

F30080 Power unit: Current increasing too quickly

Message value: Fault cause: %1 bin
Drive object: All objects
Reaction: OFF2
Acknowledge: IMMEDIATELY
Cause: The power unit has detected an excessive rate of rise in the overvoltage range.
- closed-loop control is incorrectly parameterized.
- motor has a short-circuit or fault to ground (frame).
- U/f operation: Up ramp set too low.
- U/f operation: rated current of motor much greater than that of power unit.
- infeed: High discharge and post-charging currents for voltage dip.
- infeed: High post-charging currents for overload when motoring and DC link voltage dip.
- infeed: Short-circuit currents at power-up due to the missing line reactor.
- power cables are not correctly connected.
- power cables exceed the maximum permissible length.
- power unit defective.

Additional causes for a parallel switching device (r0108.15 = 1):
- a power unit has tripped (powered down) due to a ground fault.
- the closed-loop circulating current control is either too slow or has been set too fast.

© Siemens AG 2012 All Rights Reserved

Fault value (r0949, interpret bitwise binary):
Bit 0: Phase U.
Bit 1: Phase V.
Bit 2: Phase W.

Remedy:
- check the motor data - if required, carry out commissioning.
- check the motor circuit configuration (star-delta)
- U/f operation: Increase up ramp.
- U/f operation: Check assignment of rated currents of motor and power unit.
- infeed: Check the line supply quality.
- infeed: Reduce the motor load.
- infeed: Correct connection of the line reactor.
- check the power cable connections.
- check the power cables for short-circuit or ground fault.
- check the length of the power cables.
- replace power unit.

For a parallel switching device (r0108.15 = 1) the following additionally applies:
- check the ground fault monitoring thresholds (p0287).
- check the setting of the closed-loop circulating current control (p7036, p7037).

F30081 Power unit: Switching operations too frequent

Message value: Fault cause: %1 bin

Drive object: All objects

Reaction: OFF2

Acknowledge: IMMEDIATELY

Cause:
The power unit has executed too many switching operations for current limitation.
- closed-loop control is incorrectly parameterized.
- motor has a short-circuit or fault to ground (frame).
- U/f operation: Up ramp set too low.
- U/f operation: rated current of motor much greater than that of power unit.
- infeed: High discharge and post-charging currents for voltage dip.
- infeed: High post-charging currents for overload when motoring and DC link voltage dip.
- infeed: Short-circuit currents at power-up due to the missing line reactor.
- power cables are not correctly connected.
- power cables exceed the maximum permissible length.
- power unit defective.

Additional causes for a parallel switching device (r0108.15 = 1):
- a power unit has tripped (powered down) due to a ground fault.
- the closed-loop circulating current control is either too slow or has been set too fast.

Fault value (r0949, interpret bitwise binary):
Bit 0: Phase U.
Bit 1: Phase V.
Bit 2: Phase W.

Remedy:
- check the motor data - if required, carry out commissioning.
- check the motor circuit configuration (star-delta)
- U/f operation: Increase up ramp.
- U/f operation: Check assignment of rated currents of motor and power unit.
- infeed: Check the line supply quality.
- infeed: Reduce the motor load.
- infeed: Correct connection of the line reactor.
- check the power cable connections.
- check the power cables for short-circuit or ground fault.
- check the length of the power cables.
- replace power unit.

For a parallel switching device (r0108.15 = 1) the following additionally applies:
- check the ground fault monitoring thresholds (p0287).
- check the setting of the closed-loop circulating current control (p7036, p7037).

© Siemens AG 2012 All Rights Reserved

F30105 PU: Actual value sensing fault

Message value: -
Drive object: B_INF, VECTOR_G
Reaction: OFF2
Acknowledge: IMMEDIATELY
Cause: At least one incorrect actual value channel was detected on the Power Stack Adapter (PSA).
The incorrect actual value channels are displayed in the following diagnostic parameters.
Remedy: Evaluate the diagnostic parameters.
If the actual value channel is incorrect, check the components and if required, replace.

F30314 Power unit: 24 V power supply overloaded by PM

Message value: -
Drive object: VECTOR_G
Reaction: OFF2
Acknowledge: IMMEDIATELY (POWER ON)
Cause: The 24 V power supply through the Power Module (PM) is overloaded.
An external 24 V power supply via X124 on the Control Unit is not connected.
Remedy: Connect an external 24 V power supply via X124 at the Control Unit.

A30315 (F) Power unit: 24 V power supply overloaded by PM

Message value: -
Drive object: VECTOR_G
Reaction: NONE
Acknowledge: NONE
Cause: The 24 V power supply through the Power Module (PM) is overloaded.
An external 24 V power supply via X124 on the Control Unit is not connected.
Remedy: Connect an external 24 V power supply via X124 at the Control Unit.
Reaction upon F: NONE (OFF1, OFF2, OFF3)
Acknowl. upon F: IMMEDIATELY (POWER ON)

A30502 Power unit: DC link overvoltage

Message value: %1
Drive object: VECTOR_G
Reaction: NONE
Acknowledge: NONE
Cause: The power unit has detected overvoltage in the DC link on a pulse inhibit.
- device connection voltage too high.
- line reactor incorrectly dimensioned.
Alarm value (r0949, interpret decimal):
DC link voltage [1 bit = 100 mV].
See also: r0070 (Actual DC link voltage)
Remedy: - check the device supply voltage (p0210).
- check the dimensioning of the line reactor.
See also: p0210 (Drive unit line supply voltage)

F30600 SI MM: STOP A initiated

Message value: %1
Drive object: B_INF, VECTOR_G
Reaction: OFF2
Acknowledge: IMMEDIATELY (POWER ON)
Cause: The "Safety Integrated" function integrated in the drive in the Motor Module (MM) has detected a fault and initiated STOP A (pulse suppression via the safety shutdown path of the Motor Module).
- forced checking procedure of the safety shutdown path of the Motor Module unsuccessful.
- subsequent response to fault F30611 (defect in a monitoring channel).

© Siemens AG 2012 All Rights Reserved

Fault value (r0949, interpret decimal):
0: Stop request from the Control Unit.
1005: Pulses suppressed although STO not selected and there is no internal STOP A present.
1010: Pulses enabled although STO is selected or an internal STOP A is present.
1020: Internal software error in the "Internal voltage protection" function. The "internal voltage protection" function is withdrawn. A STOP A that cannot be acknowledged is initiated.
9999: Subsequent response to fault F30611.

Remedy:
- select Safe Torque Off and de-select again.
- replace the Motor Module involved.
For fault value = 1020:
- carry out a POWER ON (power off/on) for all components.
- upgrade the Motor Module software.
- replace the Motor Module.
For fault value = 9999:
- carry out diagnostics for fault F30611.
Note:
CU: Control Unit
MM: Motor Module
SI: Safety Integrated
STO: Safe Torque Off / SH: Safe standstill

F30611 SI MM: Defect in a monitoring channel

Message value: %1

Drive object: B_INF, VECTOR_G

Reaction: Infeed: NONE (OFF1, OFF2)
Vector: NONE (OFF1, OFF2, OFF3)

Acknowledge: IMMEDIATELY (POWER ON)

Cause: The "Safety Integrated" function integrated in the drive in the Motor Module (MM) has detected a fault in the cross-wise data comparison between the Control Unit (CU) and MM and initiated a STOP F.
As a result of this fault, after the parameterized transition has expired (p9858), fault F30600 is output (SI MM: STOP A initiated).
Fault value (r0949, interpret decimal):
0: Stop request from the Control Unit.
1 ... 999:
Number of the cross-compared data that resulted in this fault. This number is also displayed in r9895.
1: SI monitoring clock cycle (r9780, r9880).
2: SI enable safety functions (p9601, p9801). Crosswise data comparison is only carried out for the supported bits.
3: SI SGE changeover tolerance time (p9650, p9850).
4: SI transition period STOP F to STOP A (p9658, p9858).
5: SI enable Safe Brake Control (p9602, p9802).
6: SI Motion enable, safety-relevant functions (p9501, internal value).
7: SI pulse suppression delay time for Safe Stop 1 (p9652, p9852).
8: SI PROFIsafe address (p9610, p9810).
9: SI debounce time for STO/SBC/SS1 (MM) (p9651, p9851).
10: SI delay time for pulse suppression for ESR (p9697, p9897).
11: SI Safe Brake Adapter mode, BICO interconnection (p9621, p9821).
12: SI Safe Brake Adapter relay ON time (p9622[0], p9822[0]).
13: SI Safe Brake Adapter relay OFF time (p9622[1], p9822[1]).
14: SI PROFIsafe telegram selection (p9611, p9811).
1000: Watchdog timer has expired.
Within the time of approx. 5 x p9650, alternatively, the following was defined:
- Too many switching operations have occurred at the EP terminal of the Motor Module.
- Via PROFIsafe/TM54F, STO was too frequently initiated (also as subsequent response).
- Safe pulse cancellation (r9723.9) was too frequently initiated (also as subsequent response).
1001, 1002: Initialization error, change timer / check timer.
1950: Module temperature outside the permissible temperature range.
1951: Module temperature not plausible.
2000: Status of the STO selection on the Control Unit and Motor Module are different.
2001: Feedback signal for safe pulse suppression on the Control Unit and Motor Module are different.
2002: Status of the delay timer SS1 on the Control Unit and Motor Module are different (status of the timer in p9650/p9850).

© Siemens AG 2012 All Rights Reserved

6000 ... 6999:
Error in the PROFIsafe control.
For these fault values, the failsafe control signals (failsafe values) are transferred to the safety functions.
The significance of the individual message values is described in safety message C01711.

Remedy: Re fault value = 1 ... 5 and 7 ... 999:
- check the cross data comparison that resulted in a STOP F.
- carry out a POWER ON (power off/on) for all components.
- upgrade the Motor Module software.
- upgrade the Control Unit software.

For fault value = 6:
- carry out a POWER ON (power off/on) for all components.
- upgrade the Motor Module software.
- upgrade the Control Unit software.

For fault value = 1000:
- check the wiring of the safety-relevant inputs (SGE) on the Control Unit (contact problems).
- PROFIsafe: Remove contact problems/faults at the PROFIBUS master/PROFINET controller.
- check the wiring of the failsafe inputs at the TM54F (contact problems).

Re fault value = 1001, 1002:
- carry out a POWER ON (power off/on) for all components.
- upgrade the Motor Module software.
- upgrade the Control Unit software.

Re fault value = 2000, 2001, 2002:
- check the tolerance time SGE changeover and if required, increase the value (p9650/p9850, p9652/p9852).
- check the wiring of the safety-relevant inputs (SGE) (contact problems).
- check the cause of the STO selection in r9772. When the SMM functions are active (p9501 = 1), STO can also be selected using these functions.
- replace the Motor Module involved.

Re fault value = 6000 ... 6999:
Refer to the description of the message values in safety message C01711.
Note:
CU: Control Unit
EP: Enable Pulses (pulse enable)
ESR: Extended Stop and Retract
MM: Motor Module
SGE: Safety-relevant input
SI: Safety Integrated
SMM: Safe Motion Monitoring
SS1: Safe Stop 1 (corresponds to Stop Category 1 acc. to EN60204)
STO: Safe Torque Off / SH: Safe standstill

N30620 (F, A) SI MM: Safe Torque Off active

Message value: -

Drive object: B_INF, VECTOR_G

Reaction: NONE

Acknowledge: NONE

Cause: The function "Safe Torque Off" (STO) of the basic functions was selected on the Motor Module (MM) via the input terminal and is active.
Note:
- This message does not result in a safety stop response.
- This message is not output when STO is selected using the Extended Functions.

Remedy: Not necessary.
Note:
MM: Motor Module
SI: Safety Integrated
STO: Safe Torque Off / SH: Safe standstill

Reaction upon F: OFF2

Acknowl. upon F: IMMEDIATELY (POWER ON)

Reaction upon A: NONE

Acknowl. upon A: NONE

© Siemens AG 2012 All Rights Reserved

N30621 (F, A) SI MM: Safe Stop 1 active

Message value: -

Drive object: B_INF, VECTOR_G

Reaction: NONE

Acknowledge: NONE

Cause: The "Safe Stop 1" function (SS1) was selected on the Motor Module (MM) and is active.
Note:
This message does not result in a safety stop response.

Remedy: Not necessary.
Note:
MM: Motor Module
SI: Safety Integrated
SS1: Safe Stop 1 (corresponds to Stop Category 1 acc. to EN60204)

Reaction upon F: Infeed: OFF2
Vector: NONE (OFF3)

Acknowl. upon F: IMMEDIATELY (POWER ON)

Reaction upon A: NONE

Acknowl. upon A: NONE

F30625 SI MM: Sign-of-life error in safety data

Message value: %1

Drive object: B_INF, VECTOR_G

Reaction: OFF2

Acknowledge: IMMEDIATELY (POWER ON)

Cause: The "Safety Integrated" function integrated in the drive on the Motor Module (MM) has detected an error in the sign-of-life of the safety data between the Control Unit (CU) and MM and initiated a STOP A.
- there is either a DRIVE-CLiQ communication error or communication has failed.
- a time slice overflow of the safety software has occurred.
- The enable of the safety functions in both monitoring channels is inconsistent (p9601 = 0, p9801 <> 0).
Fault value (r0949, interpret decimal):
Only for internal Siemens troubleshooting.

Remedy: - select Safe Torque Off and de-select again.
- carry out a POWER ON (power off/on) for all components.
- check whether there is a DRIVE-CLiQ communication error between the Control Unit and the Motor Module involved and, if required, carry out a diagnostics routine for the faults identified.
- de-select all drive functions that are not absolutely necessary.
- reduce the number of drives.
- check the electrical cabinet design and cable routing for EMC compliance
- Check the enable of the safety functions for both of the monitoring channels and if required, correct (p9601, p9801).
Note:
CU: Control Unit
MM: Motor Module
SI: Safety Integrated

F30630 SI MM: Brake control error

Message value: %1

Drive object: B_INF, VECTOR_G

Reaction: OFF2

Acknowledge: IMMEDIATELY (POWER ON)

Cause: The "Safety Integrated" function integrated in the drive on the Motor Module (MM) has detected a brake control error and initiated a STOP A.
Fault value (r0949, interpret decimal):
10:
Fault in "open holding brake" operation.
- Parameter p1278 incorrectly set.
- No brake connected or wire breakage (check whether brake releases for p1278 = 1 and p9602/p9802 = 0 (SBC de-activated)).
- Ground fault in brake cable.

© Siemens AG 2012 All Rights Reserved

30:
Fault in "close holding brake" operation.
- No brake connected or wire breakage (check whether brake releases for p1278 = 1 and p9602/p9802 = 0 (SBC deactivated)).
- Short-circuit in brake winding.
40:
Fault in "brake closed" state.
60, 70:
Fault in the brake control circuit of the Control Unit or communication fault between the Control Unit and Motor Module (brake control).
81: Safe Brake Adapter: Fault in "brake closed" state.
82: Safe Brake Adapter: Fault in "open brake" state.
83: Safe Brake Adapter: Fault in "close brake" state.
84,85:
Safe Brake Adapter: Fault in the brake control circuit of the Control Unit or communication fault between Control Unit and Motor Module (brake control).
Note:
The following causes may apply to fault values:
- motor cable is not shielded correctly.
- defect in control circuit of the Motor Module.

Remedy:
- check parameter p1278 (for SBC, only p1278 = 0 is permissible).
- select Safe Torque Off and de-select again.
- check the motor holding brake connection.
- check the function of the motor holding brake.
- check whether there is a DRIVE-CLiQ communication error between the Control Unit and the Motor Module involved and, if required, carry out a diagnostics routine for the faults identified.
- check that the electrical cabinet design and cable routing are in compliance with EMC regulations (e.g. shield of the motor cable and brake conductors are connected with the shield connecting plate and the motor connectors are tightly screwed to the housing).
- replace the Motor Module involved.
Operation with Safe Brake Module or Safe Brake Adapter:
- check the Safe Brake Module or Safe Brake Adapter connection.
- Replace the Safe Brake Module or Safe Brake Adapter.
Note:
MM: Motor Module
SBC: Safe Brake Control
SI: Safety Integrated

F30631 Brake control: external release active

Message value: -
Drive object: B_INF, VECTOR_G
Reaction: OFF2
Acknowledge: IMMEDIATELY (POWER ON)
Cause: For service purposes, the brake is supplied with voltage at terminal X4.1.
Remedy: Remove the power supply at terminal X4.1.

A30640 (F) SI MM: Fault in the shutdown path of the second channel

Message value: %1
Drive object: B_INF, VECTOR_G
Reaction: NONE
Acknowledge: NONE
Cause: The Motor Module has detected a communication error with the higher-level control or the TM54F to transfer the safety-relevant information or there is a communication error between Motor Modules connected in parallel.
Note:
This fault results in a STOP A that can be acknowledged.
Fault value (r0949, interpret decimal):
Only for internal Siemens troubleshooting.

Remedy: For the higher-level control, the following applies:
- check the PROFIsafe address in the higher-level control and Motor Modules and if required, align.
- save all parameters (p0977 = 1).
- carry out a POWER ON (power off/on) for all components.

© Siemens AG 2012 All Rights Reserved

For TM54F, carry out the following steps:
- start the copy function for the node identifier (p9700 = 1D hex).
- acknowledge hardware CRC (p9701 = EC hex).
- save all parameters (p0977 = 1).
- carry out a POWER ON (power off/on) for all components.
For a parallel connection, the following applies:
- check the PROFIsafe address in the Control Unit and Motor Module and if required, align.
- save all parameters (p0977 = 1).
- carry out a POWER ON (power off/on) for all components.
The following generally applies:
- upgrade the Motor Module software.
Note:
MM: Motor Module
SI: Safety Integrated
See also: p9810 (SI PROFIsafe address (Motor Module))

Reaction upon F: NONE (OFF2)

Acknowl. upon F: IMMEDIATELY (POWER ON)

F30649 SI MM: Internal software error

Message value: %1

Drive object: B_INF, VECTOR_G

Reaction: OFF2

Acknowledge: IMMEDIATELY (POWER ON)

Cause: An internal error in the Safety Integrated software on the Motor Module has occurred.
Note:
This fault results in a STOP A that cannot be acknowledged.
Fault value (r0949, interpret hexadecimal):
Only for internal Siemens troubleshooting.

Remedy:
- carry out a POWER ON (power off/on) for all components.
- re-commission the Safety Integrated function and carry out a POWER ON.
- upgrade the Motor Module software.
- contact the Hotline.
- replace the Motor Module.

Note:
MM: Motor Module
SI: Safety Integrated

F30650 SI MM: Acceptance test required

Message value: %1

Drive object: B_INF, VECTOR_G

Reaction: OFF2

Acknowledge: IMMEDIATELY (POWER ON)

Cause: The "Safety Integrated" function on the Motor Module requires an acceptance test.
Note:
This fault results in a STOP A that can be acknowledged.
Fault value (r0949, interpret decimal):
130: Safety parameters for the Motor Module not available.
Note:
This fault value is always output when Safety Integrated is commissioned for the first time.
1000: Reference and actual checksum in the Motor Module are not identical (booting).
- as a result of the changed current controller sampling time (p0115[0]), the clock cycle time for the Safety Integrated Basic Functions (r9880) was adapted.
- at least one checksum-checked piece of data is defective.
- Safety parameters set offline and loaded into the Control Unit.
2000: Reference and actual checksum on the Motor Module are not identical (commissioning mode).
- reference checksum incorrectly entered into the Motor Module (p9899 not equal to r9898).
2003: Acceptance test is required as a safety parameter has been changed.
2005: The safety logbook has identified that the safety checksums have changed. An acceptance test is required.
3003: Acceptance test is required as a hardware-related safety parameter has been changed.
9999: Subsequent response of another safety-related fault that occurred when booting that requires an acceptance test.

© Siemens AG 2012 All Rights Reserved

Remedy: For fault value = 130:
- carry out safety commissioning routine.
For fault value = 1000:
- check the Safety Integrated Basic Functions (r9880) and adapt the reference checksum (p9899).
- again carry out safety commissioning routine.
- replace the memory card or Control Unit.
- Using STARTER, activate the safety parameters for the drive involved (change settings, copy parameters, activate settings).
For fault value = 2000:
- check the safety parameters in the Motor Module and adapt the reference checksum (p9899).
Re fault value = 2003, 2005:
- Carry out an acceptance test and generate an acceptance report.
The procedure when carrying out an acceptance test as well as an example of the acceptance report are provided in the following literature:
SINAMICS S120 Function Manual Safety Integrated
For fault value = 3003:
- carry out the function checks for the modified hardware and generate an acceptance report.
The procedure when carrying out an acceptance test as well as an example of the acceptance report are provided in the following literature:
SINAMICS S120 Function Manual Safety Integrated
For fault value = 9999:
- carry out diagnostics for the other safety-related fault that is present.
Note:
MM: Motor Module
SI: Safety Integrated
See also: p9799 (SI reference checksum SI parameters (Control Unit)), p9899 (SI reference checksum SI parameters (Motor Module))

F30651 SI MM: Synchronization with Control Unit unsuccessful

Message value: %1

Drive object: B_INF, VECTOR_G

Reaction: OFF2

Acknowledge: IMMEDIATELY (POWER ON)

Cause: The "Safety Integrated" function integrated in the drive is requesting synchronization of the safety time slices on the Control Unit and Motor Module. This synchronization routine was unsuccessful.
Note:
This fault results in a STOP A that cannot be acknowledged.
Fault value (r0949, interpret decimal):
Only for internal Siemens troubleshooting.

Remedy: - carry out a POWER ON (power off/on) for all components.
- upgrade the Motor Module software.
- upgrade the Control Unit software.
Note:
MM: Motor Module
SI: Safety Integrated

F30652 SI MM: Illegal monitoring clock cycle

Message value: %1

Drive object: B_INF, VECTOR_G

Reaction: OFF2

Acknowledge: IMMEDIATELY (POWER ON)

Cause: The Safety Integrated monitoring clock cycle cannot be maintained due to the communication conditions requested in the system.
Note:
This fault results in a STOP A that cannot be acknowledged.
Fault value (r0949, interpret decimal):
Only for internal Siemens troubleshooting.

Remedy: - if fault F01652 simultaneously occurs, apply the remedy/countermeasure described there.
- Upgrade the firmware of the Motor Module to a later version.

© Siemens AG 2012 All Rights Reserved

Note:
MM: Motor Module
SI: Safety Integrated

F30655 SI MM: Align monitoring functions

Message value: %1

Drive object: B_INF, VECTOR_G

Reaction: OFF2

Acknowledge: IMMEDIATELY (POWER ON)

Cause: An error has occurred when aligning the Safety Integrated monitoring functions on the Control Unit (CU) and Motor Module (MM). Control Unit and Motor Module were not able to determine a common set of supported SI monitoring functions.
- there is either a DRIVE-CLiQ communication error or communication has failed.
- Safety Integrated software releases on the Control Unit and Motor Module are not compatible with one another.
Note:
This fault results in a STOP A that cannot be acknowledged.
Fault value (r0949, interpret hexadecimal):
Only for internal Siemens troubleshooting.

Remedy: - carry out a POWER ON (power off/on) for all components.
- upgrade the Motor Module software.
- upgrade the Control Unit software.
- check the electrical cabinet design and cable routing for EMC compliance
Note:
CU: Control Unit
MM: Motor Module
SI: Safety Integrated

F30656 SI MM: Motor Module parameter error

Message value: %1

Drive object: B_INF, VECTOR_G

Reaction: OFF2

Acknowledge: IMMEDIATELY (POWER ON)

Cause: When accessing the Safety Integrated parameters for the Motor Module (MM) in the non-volatile memory, an error has occurred.
Note:
This fault results in a STOP A that can be acknowledged.
Fault value (r0949, interpret decimal):
129:
- safety parameters for the Motor Module corrupted.
- drive with enabled safety functions was possibly copied offline using the commissioning software and the project downloaded.
131: Internal software error on the Control Unit.
255: Internal Motor Module software error.

Remedy: - re-commission the safety functions.
- upgrade the Control Unit software.
- upgrade the Motor Module software.
- replace the memory card or Control Unit.
For fault value = 129:
- activate the safety commissioning mode (p0010 = 95).
- adapt the PROFIsafe address (p9610).
- start the copy function for SI parameters (p9700 = D0 hex).
- acknowledge data change (p9701 = DC hex).
- exit the safety commissioning mode (p0010 = 0).
- save all parameters (p0977 = 1 or "copy RAM to ROM").
- carry out a POWER ON (power off/on) for all components.
Note:
MM: Motor Module
SI: Safety Integrated

© Siemens AG 2012 All Rights Reserved

F30657 SI CU: PROFIsafe telegram number invalid

Message value: -

Drive object: VECTOR_G

Reaction: OFF2

Acknowledge: POWER ON

Cause: The PROFIsafe telegram number set in p9811 is not valid.
When PROFIsafe is enabled (p9801.3 = 1), then a telegram number greater than zero must be entered in p9811.
Note:
This fault does not result in a safety stop response.
See also: p9611 (SI PROFIsafe telegram selection (Control Unit)), p60022 (PROFIsafe telegram selection)

Remedy: Check the telegram number setting (p9811).

F30659 SI MM: Write request for parameter rejected

Message value: %1

Drive object: B_INF, VECTOR_G

Reaction: OFF2

Acknowledge: IMMEDIATELY (POWER ON)

Cause: The write request for one or several Safety Integrated parameters on the Motor Module (MM) was rejected.
Note:
This fault does not result in a safety stop response.
Fault value (r0949, interpret decimal):
10: An attempt was made to enable the STO function although this cannot be supported.
11: An attempt was made to enable the SBC function although this cannot be supported.
13: An attempt was made to enable the SS1 function although this cannot be supported.
14: An attempt was made to enable the safe motion monitoring function with the higher-level control, although this cannot be supported.
15: An attempt was made to enable the motion monitoring functions integrated in the drive although these cannot be supported.
16: An attempt was made to enable the PROFIsafe communication - although this cannot be supported or the version of the PROFIsafe driver used on the CU and MM is different.
18: An attempt was made to enable the PROFIsafe function for Basic Functions although this cannot be supported.
19: For ESR, an attempt was made to enable the delay for pulse suppression, although this cannot be supported.
33: An attempt was made to enable the motion monitoring functions without selection integrated in the drive (p9601.5, p9801.5), although this cannot be supported.
See also: r9771 (SI common functions (Control Unit)), r9871 (SI common functions (Motor Module)

Remedy: Re fault value = 10, 11, 13, 14, 15, 16, 18, 19:
- check whether there are faults in the safety function alignment between the Control Unit and the Motor Module involved (F01655, F30655) and if required, carry out diagnostics for the faults involved.
- use a Motor Module that supports the required function.
- upgrade the Motor Module software.
- upgrade the Control Unit software.
For fault value = 33:
- Deselect motion monitoring functions without selection integrated in drive (p9601.5, p9801.5) and select safety functions that are supported (see p9771/p9871),
or:
- use a Motor Module that supports the required function.
- upgrade the Motor Module software.
- upgrade the Control Unit software.
Note:
CU: Control Unit
ESR: Extended Stop and Retract
MM: Motor Module
SBC: Safe Brake Control
SI: Safety Integrated
SS1: Safe Stop 1 (corresponds to Stop Category 1 acc. to EN60204)
STO: Safe Torque Off / SH: Safe standstill

© Siemens AG 2012 All Rights Reserved

F30662 Error in internal communications

Message value: %1
Drive object: B_INF, ENC, HUB, TB30, TM150, TM31, TM54F_MA, TM54F_SL, VECTOR_G
Reaction: OFF2
Acknowledge: POWER ON
Cause: A module-internal communication error has occurred.
Fault value (r0949, interpret hexadecimal):
Only for internal Siemens troubleshooting.
Remedy: - carry out a POWER ON (power off/on).
- upgrade firmware to later version.
- contact the Hotline.

F30664 Error while booting

Message value: %1
Drive object: B_INF, ENC, HUB, TB30, TM150, TM31, TM54F_MA, TM54F_SL, VECTOR_G
Reaction: OFF2
Acknowledge: POWER ON
Cause: An error has occurred during booting.
Fault value (r0949, interpret hexadecimal):
Only for internal Siemens troubleshooting.
Remedy: - carry out a POWER ON (power off/on).
- upgrade firmware to later version.
- contact the Hotline.

F30665 SI MM: System is defective

Message value: %1
Drive object: VECTOR_G
Reaction: OFF2
Acknowledge: IMMEDIATELY
Cause: A system defect was detected before the last boot or in the actual one. The system might have been rebooted (reset).
Fault value (r0949, interpret hexadecimal):
200000 hex, 400000 hex:
- Fault in the actual booting/operation.
2 hex:
- parameters p9500 and p9300 are not the same (if Safety message C30711 is displayed at the same time).
Additional values:
- defect before the last time that the system booted.
Remedy: - carry out a POWER ON (power off/on).
- upgrade firmware to later version.
- contact the Hotline.
For fault value = 2:
- check parameters p9500 and p9300 to see if they are the same (if Safety message C30711 is displayed at the same time).
Re fault value = 400000 hex:
- ensure that the Control Unit is connected to the Power Module.

A30666 (F) SI Motion MM: Steady-state (static) 1 signal at the F-DI for safety-relevant acknowledgement

Message value: -
Drive object: VECTOR_G
Reaction: NONE
Acknowledge: NONE
Cause: A logical 1 signal is present at the F-DI configured in p10106 for more than 10 seconds.
If, at the F-DI no acknowledgment was performed for safe acknowledgment, then a steady-state logical and 0 signal must be present. This avoids unintentional safety-relevant acknowledgement (or the "Internal Event Acknowledge" signal) if a wire breaks or one of the two digital inputs bounces.

© Siemens AG 2012 All Rights Reserved

Remedy: Set the fail-safe digital input (F-DI) to a logical 0 signal (p10106).
Note:
F-DI: Failsafe Digital Input

Reaction upon F: NONE

Acknowl. upon F: IMMEDIATELY

F30672 SI CU: Control Unit software incompatible

Message value: %1

Drive object: VECTOR_G

Reaction: OFF2

Acknowledge: IMMEDIATELY (POWER ON)

Cause: The existing Control Unit software does not support the safe drive-based motion monitoring function.
Note:
This fault results in a STOP A that cannot be acknowledged.
Fault value (r0949, interpret decimal):
Only for internal Siemens troubleshooting.

Remedy: - check whether there are faults in the safety function alignment between the Control Unit and the Motor Module (F01655, F30655) and if required, carry out diagnostics for the faults involved.
- use a Control Unit that supports the safe motion monitoring function.
- upgrade the Control Unit software.
Note:
SI: Safety Integrated

F30674 SI Motion MM: Safety function not supported by PROFIsafe telegram

Message value: %1

Drive object: VECTOR_G

Reaction: OFF2

Acknowledge: POWER ON

Cause: The monitoring function enabled in p9301 and p9801 is not supported by the currently set PROFIsafe telegram (p9811).
Note:
This fault does not result in a safety stop response.
Fault value (r0949, interpret bitwise binary):
Bit 24 = 1:
Transfer SLS (SG) limit value via PROFIsafe not supported (p9301.24).
Bit 25 = 1:
Transfer safe position via PROFIsafe is not supported (p9301.25).

Remedy: - deselect the monitoring function involved (p9301, p9801).
- set the matching PROFIsafe telegram (p9811).
Note:
SI: Safety Integrated
SLS: Safely-Limited Speed
SP: Safe Position

F30680 SI Motion MM: Checksum error safety monitoring functions

Message value: %1

Drive object: VECTOR_G

Reaction: OFF2

Acknowledge: IMMEDIATELY (POWER ON)

Cause: The actual checksum calculated by the Motor Module and entered in r9398 over the safety-relevant parameters does not match the reference checksum saved in p9399 at the last machine acceptance.
Safety-relevant parameters have been changed or a fault is present.
Note:
This fault results in a STOP A that can be acknowledged.
Fault value (r0949, interpret decimal):
0: Checksum error for SI parameters for motion monitoring.
1: Checksum error for SI parameters for component assignment.

© Siemens AG 2012 All Rights Reserved

Remedy: - check the safety-relevant parameters and if required, correct.
- set the reference checksum to the actual checksum.
- execute the function "Copy RAM to ROM".
- perform a POWER ON if safety parameters requiring a POWER ON have been modified.
- carry out an acceptance test.

F30681 SI Motion MM: Incorrect parameter value

Message value: Parameter: %1, supplementary information: %2

Drive object: VECTOR_G

Reaction: OFF2

Acknowledge: IMMEDIATELY (POWER ON)

Cause: The parameter cannot be parameterized with this value.
Note:
This message does not result in a safety stop response.
Fault value (r0949, interpret decimal): yyyyxxxx dec:
yyyy = supplementary information,
xxxx = parameter
yyyy = 0: no additional information available.
xxxx = 9301:
It is not permissible to enable the function "n<nx hysteresis and filtering" (p9301.16) in conjunction with the function "extended functions without selection" (p9801.5).
xxxx = 9385:
For Safety encoderless and synchronous motor, p9385 must be set to 4.
xxxx = 9801:
yyyy = 1:
If motion monitoring functions integrated in the drive (p9801.2 = 1) and extended functions without selection (p9801.5 = 1) are activated, then PROFIsafe (p9801.3 = 1) is not possible.
yyyy = 2:
Extended functions without selection (p9801.5 =1) are enabled, without enabling motion monitoring functions integrated in the drive (p9801.2).
yyyy = 3:
Onboard F-DI are enabled, without enabling motion monitoring functions integrated in the drive (p9801.2).
yyyy = 5:
Transfer of the SLS limit value via PROFIsafe (p9301.24) has been enabled, without enabling PROFIsafe.
yyyy = 6:
Transfer of the safe position via PROFIsafe (p9301.25) has been enabled, without enabling PROFIsafe.

Remedy: - correct the parameter (if required, also on the CU side, p9601).
xxxx: parameter, yyyy: additional information.
If the encoder parameters (p9526/p9326) have different values, start the copy function for SI parameters on the drive (p9700 = 57 hex).
xxxx = 9301:
- Correct parameters p9501.16 and p9301.16, or deselect the extended functions without selection (p9801.5).
xxxx = 9317:
Further, p9316.0 should be checked.
xxxx = 9801:
yyyy = 1:
Only enable motion monitoring functions integrated in the drive (p9801.2 = 1) and extended functions without selection (p9801.5 = 1) – or only PROFIsafe (p9801.3 = 1).
yyyy = 2, 3:
Enable motion monitoring functions integrated in the drive (p9801.2 = 1).
yyyy = 5:
To transfer the SLS limit values via PROFIsafe (p9301.24 = 1), also enable PROFIsafe (p9801.3 =1) and motion monitoring functions integrated in the drive (p9801.2 = 1).
yyyy = 6:
For the safe position via PROFIsafe (p9301.25 = 1), also enable PROFIsafe (p9801.3 =1) and motion monitoring functions integrated in the drive (p9801.2 = 1).

© Siemens AG 2012 All Rights Reserved

F30682 SI Motion MM: Monitoring function not supported

Message value: %1

Drive object: VECTOR_G

Reaction: OFF2

Acknowledge: IMMEDIATELY (POWER ON)

Cause: The monitoring function enabled in p9301, p9501, p9601, p9801, p9307 or p9507 is not supported in this firmware version.
Note:
This message does not result in a safety stop response.
Fault value (r0949, interpret decimal):
1: Monitoring function SLP not supported (p9301.1).
2: Monitoring function SCA not supported (p9301.7 and p9301.8 ... 15).
3: Monitoring function SLS override not supported (p9301.5).
4: Monitoring function external ESR activation not supported (p9301.4).
5: Monitoring function F-DI in PROFIsafe not supported (p9301.30).
6: Enable actual value synchronization not supported (p9301.3).
9: Monitoring function not supported by the firmware or enable bit not used.
12: This Control Unit does not support operation of safety functions with a higher-level control (e.g. SINUMERIK).
24: Monitoring function SDI not supported.
26: Hysteresis and filtering for SSM monitoring function without an encoder not supported (p9301.16).
27: This hardware does not support onboard F-DI and F-DO.
30: The firmware version of the Motor Module is older than the version of the Control Unit.
33: Safety functions without selection not supported (p9601.5, p9801.5).
34: This module does not support safe position via PROFIsafe.
36: Function "SS1 without OFF3" not supported.

Remedy: - de-select the monitoring function involved (p9301, p9501, p9601, p9801, p9307, p9507).
- Upgrade the Motor Module firmware.
Note:
ESR: Extended Stop and Retract
SCA: Safe Cam / SN: Safe software cam
SDI: Safe Direction (safe motion direction)
SI: Safety Integrated
SLP: Safely-Limited Position / SE: Safe software limit switches
SLS: Safely-Limited Speed / SG: Safely reduced speed
SP: Safe Position
SS1: Safe Stop 1
See also: p9301 (SI Motion enable safety functions (Motor Module)), p9501 (SI Motion enable safety functions (Control Unit)), p9503 (SI Motion SCA (SN) enable (Control Unit)), p9601 (SI enable, functions integrated in the drive (Control Unit)), p9801 (SI enable, functions integrated in the drive (Motor Module)), r9871 (SI common functions (Motor Module)

F30683 SI Motion MM: SOS/SLS enable missing

Message value: -

Drive object: VECTOR_G

Reaction: OFF2

Acknowledge: IMMEDIATELY (POWER ON)

Cause: The safety-relevant basic function "SOS/SLS" is not enabled in p9301 although other safety-relevant monitoring functions are enabled.
Note:
This message does not result in a safety stop response.

Remedy: Enable the function "SOS/SLS" (p9301.0) and carry out a POWER ON.
Note:
SI: Safety Integrated
SLS: Safely-Limited Speed / SG: Safely reduced speed
SOS: Safe Operating Stop / SBH: Safe operating stop
See also: p9301 (SI Motion enable safety functions (Motor Module))

© Siemens AG 2012 All Rights Reserved

F30684 SI Motion MM: Safely limited position limit values interchanged

Message value: %1

Drive object: VECTOR_G

Reaction: OFF2

Acknowledge: IMMEDIATELY (POWER ON)

Cause: For the function "Safely-Limited Position" (SE), a lower value is in p9534 than in p9535.
Note:
This fault does not result in a safety stop response.
Fault value (r0949, interpret decimal):
1: Limit values SLP1 interchanged.
2: Limit values SLP2 interchanged.

Remedy: Correct the limit values in p9534 and p9535 and carry out a POWER ON.
Note:
SI: Safety Integrated
SLP: Safely-Limited Position / SE: Safe software limit switches

F30685 SI Motion MM: Safely-Limited Speed limit value too high

Message value: %1

Drive object: VECTOR_G

Reaction: OFF2

Acknowledge: IMMEDIATELY (POWER ON)

Cause: The limit value for the function "Safely-Limited Speed" (SLS) is greater than the speed that corresponds to an encoder limit frequency of 500 kHz.
Note:
This message does not result in a safety stop response.
Fault value (r0949, interpret decimal):
Maximum permissible speed.

Remedy: Correct the limit values for SLS and carry out a POWER ON.
Note:
SI: Safety Integrated
SLS: Safely-Limited Speed / SG: Safely reduced speed
See also: p9331 (SI Motion SLS limit values (Motor Module))

F30688 SI Motion MM: Actual value synchronization not permissible

Message value: -

Drive object: VECTOR_G

Reaction: OFF2

Acknowledge: IMMEDIATELY (POWER ON)

Cause: - It is not permissible to enable actual value synchronization for a 1-encoder system.
- It is not permissible to simultaneously enable actual value synchronization and a monitoring function with absolute reference (SCA/SLP).
- It is not permissible to simultaneously enable actual value synchronization and safe position via PROFIsafe.
Note:
This fault results in a STOP A that cannot be acknowledged.

Remedy: - Either select the "actual value synchronization" function or parameterize a 2-encoder system.
- Either de-select the function "actual value synchronization" or the monitoring functions with absolute reference (SCA/SLP) and carry out a POWER ON.
- Either deselect the "actual value synchronization" function or do not enable "Safe position via PROFIsafe".
Note:
SCA: Safe Cam / SN: Safe software cam
SI: Safety Integrated
SLP: Safely-Limited Position / SE: Safe software limit switches
SP: Safe Position
See also: p9501 (SI Motion enable safety functions (Control Unit)), p9526 (SI Motion encoder assignment second channel)

© Siemens AG 2012 All Rights Reserved

F30692 SI Motion MM: Parameter value not permitted for encoderless

Message value: Parameter: %1

Drive object: VECTOR_G

Reaction: OFF2

Acknowledge: IMMEDIATELY (POWER ON)

Cause: The parameter cannot be parameterized with this value if encoderless motion monitoring functions have been parameterized in p9306.
Note:
This message does not result in a safety stop response.
Fault value (r0949, interpret decimal):
Parameter number with the incorrect value.
See also: p9301 (SI Motion enable safety functions (Motor Module))

Remedy: Correct the parameter value or de-select encoderless motion monitoring functions.
See also: p9301 (SI Motion enable safety functions (Motor Module)), p9501 (SI Motion enable safety functions (Control Unit))

A30693 (F) SI MM: Safety parameter settings changed, warm restart/POWER ON required

Message value: %1

Drive object: VECTOR_G

Reaction: NONE

Acknowledge: NONE

Cause: Safety parameters have been changed; these will only take effect following a warm restart or POWER ON.
Notice:
All changed parameters of the safety motion monitoring functions will only take effect following a warm restart or POWER ON.
Alarm value (r2124, interpret decimal):
Parameter number of the safety parameter which has changed, necessitating a warm restart or POWER ON.

Remedy: - carry out a warm restart (p0009 = 30, p0976 = 2, 3).
- carry out a POWER ON (power off/on) for all components.
Note:
Before performing an acceptance test, a POWER ON must be carried out for all components.

Reaction upon F: NONE (OFF1, OFF2, OFF3)

Acknowl. upon F: POWER ON

C30700 SI Motion MM: STOP A initiated

Message value: -

Drive object: VECTOR_G

Reaction: OFF2

Acknowledge: IMMEDIATELY (POWER ON)

Cause: The drive is stopped via a STOP A (pulses are suppressed via the safety shutdown path of the Control Unit).
Possible causes:
- stop request from the Control Unit.
- pulses not suppressed after a parameterized time (p9357) after test stop selection.
- subsequent response to the message C30706 "SI Motion MM: SAM/SBR limit exceeded".
- subsequent response to the message C30714 "SI Motion MM: Safely-Limited Speed exceeded".
- subsequent response to the message C30701 "SI Motion MM: STOP B initiated".
- subsequent response to the message C01715 "SI Motion CU: Safely-limited position exceeded".
- subsequent response to the message C30716 "SI Motion MM: tolerance for safe motion direction exceeded".

Remedy: - remove the cause to the fault on the Control Unit.
- check the value in p9357, if required, increase the value.
- check the shutdown path of the Control Unit (check DRIVE-CLiQ communication).
- carry out a diagnostics routine for message C30706.
- carry out a diagnostics routine for message C30714.
- carry out a diagnostics routine for message C30701.
- carry out a diagnostics routine for message C30715.
- carry out a diagnostics routine for message C30716.
- replace the Motor Module/Power Module
- replace Control Unit.
This message can only be acknowledged via the Terminal Module 54F (TM54F) or PROFIsafe.

© Siemens AG 2012 All Rights Reserved

Note:
SAM: Safe Acceleration Monitor (safe acceleration monitoring)
SBR: Safe Brake Ramp (safe brake ramp monitoring)
SI: Safety Integrated

C30701 SI Motion MM: STOP B initiated

Message value: -

Drive object: VECTOR_G

Reaction: NONE (OFF3)

Acknowledge: IMMEDIATELY (POWER ON)

Cause: The drive is stopped via a STOP B (braking along the OFF3 ramp).
As a result of this fault, after the time parameterized in p9356 has expired or after the speed threshold parameterized in p9360 has been fallen below, message C30700 "SI Motion MM: STOP A initiated" is output.
Possible causes:
- stop request from the Control Unit.
- subsequent response to the message C30714 "SI Motion MM: Safely-Limited Speed exceeded".
- subsequent response to the message C30711 "SI Motion MM: Defect in a monitoring channel".
- subsequent response to the message C30707 "SI Motion MM: tolerance for safe operating stop exceeded".
- subsequent response to the message C01715 "SI Motion CU: Safely-limited position exceeded".
- subsequent response to the message C30716 "SI Motion MM: tolerance for safe motion direction exceeded".

Remedy: - remove the cause to the fault on the Control Unit.
- carry out a diagnostics routine for message C30714.
- carry out a diagnostics routine for message C30711.
- carry out a diagnostics routine for message C30707.
- carry out a diagnostics routine for message C30715.
- carry out a diagnostics routine for message C30716.
This message can only be acknowledged via the Terminal Module 54F (TM54F) or PROFIsafe.
Note:
SI: Safety Integrated

C30706 SI Motion MM: SAM/SBR limit exceeded

Message value: -

Drive object: VECTOR_G

Reaction: NONE

Acknowledge: IMMEDIATELY (POWER ON)

Cause: Motion monitoring functions with encoder (p9306 = 0) or encoderless with set acceleration monitoring (p9306 = 3):
SAM - safe acceleration monitoring. After initiating STOP B (SS1) or STOP C (SS2), the speed has exceeded the selected tolerance.
Motion monitoring functions encoderless with set brake ramp monitoring (p9306 = 1):
SBR - Safe brake ramp monitoring. After initiating STOP B (SS1) or SLS changeover to the lower speed stage, the speed has exceeded the selected tolerance.
- via F-DI or PROFIsafe.
The drive is shut down by the message C30700 "SI Motion MM: STOP A initiated".

Remedy: Check the braking behavior and, if necessary, adapt the tolerance for the "SAM" function or modify the parameter settings for the "SBR" function.
This message can be acknowledged without a POWER ON as follows:
- motion monitoring functions integrated in the drive: via Terminal Module 54F (TM54F) or PROFIsafe
Note:
SAM: Safe Acceleration Monitor (safe acceleration monitoring)
SBR: Safe Brake Ramp (safe ramp monitoring)
SI: Safety Integrated
See also: p9348, p9381, p9382, p9383, p9548

C30707 SI Motion MM: Tolerance for safe operating stop exceeded

Message value: -

Drive object: VECTOR_G

Reaction: NONE

Acknowledge: IMMEDIATELY (POWER ON)

Cause: The actual position has distanced itself further from the target position than the standstill tolerance.
The drive is shut down by the message C30701 "SI Motion MM: STOP B initiated".

© Siemens AG 2012 All Rights Reserved

Remedy: - check whether safety faults are present and if required carry out the appropriate diagnostic routines for the particular faults.
- check whether the standstill tolerance matches the accuracy and control dynamic performance of the axis.
This message can only be acknowledged via the Terminal Module 54F (TM54F) or PROFIsafe.
Note:
SI: Safety Integrated
SOS: Safe Operating Stop / SBH: Safe operating stop
See also: p9530 (SI Motion standstill tolerance (Control Unit))

C30708 SI Motion MM: STOP C initiated

Message value: -

Drive object: VECTOR_G

Reaction: STOP2

Acknowledge: IMMEDIATELY (POWER ON)

Cause: The drive is stopped via a STOP C (braking along the OFF3 ramp).
"Safe Operating Stop" (SOS) is activated after the parameterized time has expired.
Possible causes:
- stop request from the higher-level control.
- subsequent response to the message C30714 "SI Motion MM: Safely-Limited Speed exceeded".
- subsequent response to the message C01715 "SI Motion CU: Safely-limited position exceeded".
- subsequent response to the message C30716 "SI Motion MM: tolerance for safe motion direction exceeded".
See also: p9552 (SI Motion transition time STOP C to SOS (SBH) (Control Unit))

Remedy: - remove the cause of the fault at the control.
- carry out a diagnostics routine for messages C30714, C30715, C30716.
This message can only be acknowledged via the Terminal Module 54F (TM54F) or PROFIsafe.
Note:
SI: Safety Integrated
SOS: Safe Operating Stop / SBH: Safe operating stop

C30709 SI Motion MM: STOP D initiated

Message value: -

Drive object: VECTOR_G

Reaction: NONE

Acknowledge: IMMEDIATELY (POWER ON)

Cause: The drive is stopped via a STOP D (braking along the path).
"Safe Operating Stop" (SOS) is activated after the parameterized time has expired.
Possible causes:
- stop request from the Control Unit.
- subsequent response to the message C30714 "SI Motion MM: Safely-Limited Speed exceeded".
- subsequent response to the message C01715 "SI Motion CU: Safely-limited position exceeded".
- subsequent response to the message C30716 "SI Motion MM: tolerance for safe motion direction exceeded".
See also: p9353 (SI Motion transition time STOP D to SOS (Motor Module)), p9553 (SI Motion transition time STOP D to SOS (SBH) (Control Unit))

Remedy: - remove the cause of the fault at the control.
- carry out a diagnostics routine for messages C30714, C30715, C30716.
This message can only be acknowledged via the Terminal Module 54F (TM54F) or PROFIsafe.
Note:
SI: Safety Integrated
SOS: Safe Operating Stop / SBH: Safe operating stop

C30710 SI Motion MM: STOP E initiated

Message value: -

Drive object: VECTOR_G

Reaction: NONE

Acknowledge: IMMEDIATELY (POWER ON)

Cause: The drive is stopped via a STOP E (retraction motion).
"Safe Operating Stop" (SOS) is activated after the parameterized time has expired.
Possible causes:
- stop request from the higher-level control.
- subsequent response to the message C30714 "SI Motion MM: Safely-Limited Speed exceeded".

© Siemens AG 2012 All Rights Reserved

- subsequent response to the message C01715 "SI Motion CU: Safely-limited position exceeded".
- subsequent response to the message C30716 "SI Motion MM: tolerance for safe motion direction exceeded".
See also: p9354 (SI Motion transition time STOP E to SOS (Motor Module)), p9554 (SI Motion transition time STOP E to SOS (SBH) (Control Unit))

Remedy: - remove the cause of the fault at the control.
- carry out a diagnostics routine for messages C30714, C30715, C30716.
This message can only be acknowledged via the Terminal Module 54F (TM54F) or PROFIsafe.
Note:
SI: Safety Integrated
SOS: Safe Operating Stop / SBH: Safe operating stop

C30711 SI Motion MM: Defect in a monitoring channel

Message value: %1

Drive object: VECTOR_G

Reaction: NONE

Acknowledge: IMMEDIATELY (POWER ON)

Cause: When cross-comparing the two monitoring channels, the drive detected a difference between the input data or results of the monitoring functions and initiated a STOP F. One of the monitoring functions no longer reliably functions - i.e. safe operation is no longer possible.
If at least one monitoring function is active, then after the parameterized timer has expired, the message C30701 "SI Motion: STOP B initiated" is output. The message is output with message value 1031 when the Sensor Module hardware is replaced.
The following message values may also occur in the following cases if the cause that is explicitly mentioned does not apply:
- differently parameterized cycle times (p9500/p9300, p9511/p9311).
- differently parameterized axis types (p9502/p9302).
- excessively fast cycle times (p9500/p9300, p9511/p9311).
- incorrect synchronization.
Message value (r9749, interpret decimal):
Note:
The significance of the individual message values is described in safety message C01711 of the Control Unit.
0 ... 999:
Number of the cross-compared data that resulted in this message.
1000: Watchdog timer has expired. Too many signal changes have occurred at safety-relevant inputs.
1001: Initialization error of watchdog timer.
1003:
Reference tolerance exceeded.
When the user agreement is set, the difference between the new reference point that has been determined after power up (absolute encoder) or reference point approach (distance-coded or incremental measuring system) and the safe actual position (saved value + traversing distance) is greater than the reference tolerance (p9344). In this case, the user agreement is withdrawn.
1011: Acceptance test status between the monitoring channels differ.
1012: Plausibility violation of the actual value from the encoder.
1020: Cyc. communication failure between the monit. cycles.
1021: Cyc. communication failure between the monit. channel and Sensor Module.
1023: Error in the effectiveness test in the DRIVE-CLiQ encoder
1030: Encoder fault detected from another monitoring channel.
1031: Data transfer error between the monitoring channel and the Sensor Module (p9526/p9326).
1040: Pulses suppressed with active encoderless monitoring functions.
1041: Current absolute value too low (encoderless)
1042: Current/voltage plausibility error
1043: Too many acceleration phases
1044: Actual current values plausibility error.
1045: CRC of the standstill position incorrect.
5000 ... 5140:
PROFIsafe message values.
For these fault values, the failsafe control signals (failsafe values) are transferred to the safety functions.
6000 ... 6166:
PROFIsafe message values (PROFIsafe driver for PROFIBUS DP V1/V2 and PROFINET).
For these fault values, the failsafe control signals (failsafe values) are transferred to the safety functions.

© Siemens AG 2012 All Rights Reserved

7000 ... 7002:
Message values of the "Safe position via PROFIsafe" function.
See also: p9555 (SI Motion transition time STOP F to STOP B (Control Unit)), r9725 (SI Motion, diagnostics STOP F)

Remedy: Re message value = 1002:
- Perform safe acknowledgment, set the user agreement in both monitoring channels simultaneously (within 2 s).
Re message value = 1003:
- check the mechanical system of the axis. It is possible that the axis was shifted when switched-off, and the last saved actual position no longer corresponds with the new actual position after the system has been powered up again.
- Increase the tolerance for the actual value comparison when referencing (p9344).
Then check the actual values, perform a POWER ON and set the user agreement again.
Re message value = 1004:
For 1., the following applies: Perform safe acknowledgment. Set the user agreement again.
For 2., the following applies: Perform safe acknowledgment. Only set the user agreement again if the axis has been referenced.
Re message value = 1030:
- check the encoder connection.
- if required, replace the encoder.
Re message value = 1031:
When replacing a Sensor Module, carry out the following steps:
- start the copy function for the node identifier on the drive (p9700 = 1D hex).
- acknowledge the hardware CRC on the drive (p9701 = EC hex).
- save all parameters (p0977 = 1).
- carry out a POWER ON (power off/on) for all components.
The following always applies:
- check the encoder connection.
- if required, replace the encoder.
Re message value = 1040:
- de-select encoderless monitoring functions, select and de-select STO.
- if monitoring function is active, issue "SLS" pulse enable within 5 s of de-selecting STO.
Re other message values:
- the significance of the individual message values is described in safety message C01711.
Note:
This message can only be acknowledged via the Terminal Module 54F (TM54F) or PROFIsafe.
See also: p9300 (SI Motion monitoring clock cycle (Motor Module)), p9500 (SI Motion monitoring clock cycle (Control Unit))

C30712 SI Motion MM: Defect in F-IO processing

Message value: %1

Drive object: VECTOR_G

Reaction: NONE

Acknowledge: IMMEDIATELY (POWER ON)

Cause: When cross checking and comparing the two monitoring channels, the drive detected a difference between parameters or results of the F-IO processing and initiated a STOP F. One of the monitoring functions no longer reliably functions - i.e. safe operation is no longer possible.
The safety message C30711 with message value 0 is also displayed due to initiation of STOP F.
If at least one monitoring function is active, the safety message C30701 "SI Motion: STOP B initiated" is output after the parameterized timer has expired.
Message value (r9749, interpret decimal):
Number of the cross-compared data that resulted in this message.
Refer to the description of the message values in safety message C01712.

Remedy: - check parameterization in the parameters involved and correct if required.
- ensure equality by copying the SI data to the second channel and then carry out an acceptance test.
- check monitoring clock cycle for equality (p9500, p9300).
Note:
This message can be acknowledged via F-DI or PROFIsafe.
See also: p9300 (SI Motion monitoring clock cycle (Motor Module)), p9500 (SI Motion monitoring clock cycle (Control Unit))

© Siemens AG 2012 All Rights Reserved

C30714 SI Motion MM: Safely-Limited Speed exceeded

Message value: %1

Drive object: VECTOR_G

Reaction: NONE

Acknowledge: IMMEDIATELY (POWER ON)

Cause: The drive had moved faster than that specified by the velocity limit value (p9331). The drive is stopped as a result of the configured stop response (p9363).
Message value (r9749, interpret decimal):
100: SLS1 exceeded.
200: SLS2 exceeded.
300: SLS3 exceeded.
400: SLS4 exceeded.
1000: Encoder limit frequency exceeded.

Remedy: - check the traversing/motion program in the control.
- check the limits for "SLS" function and if required, adapt (p9331).
Note:
This message can only be acknowledged via the Terminal Module 54F (TM54F) or PROFIsafe.
SI: Safety Integrated
SLS: Safely-Limited Speed / SG: Safely reduced speed
See also: p9331 (SI Motion SLS limit values (Motor Module)), p9363 (SI Motion SLS stop response (Motor Module))

C30715 SI Motion MM: Safely-limited position exceeded

Message value: %1

Drive object: VECTOR_G

Reaction: NONE

Acknowledge: IMMEDIATELY (POWER ON)

Cause: The axis has moved past a parameterized position that is monitored by the "SLP" function.
Message value (r9749, interpret decimal):
10: SLP1 violated.
20: SLP2 violated.

Remedy: - check the traversing/motion program in the control.
- check the limits for "SLP" function and if required, adapt (p9534, p9535).
This message can be acknowledged as follows:
- motion monitoring functions with SINUMERIK: Via the machine control panel
Note:
SI: Safety Integrated
SLP: Safely-Limited Position / SE: Safe software limit switches
See also: p9334 (SI Motion SLP upper limit values (Motor Module)), p9335 (SI Motion SLP lower limit values (Motor Module))

C30716 SI Motion MM: Tolerance for safe motion direction exceeded

Message value: %1

Drive object: VECTOR_G

Reaction: NONE

Acknowledge: IMMEDIATELY (POWER ON)

Cause: The tolerance for the "safe motion direction" function was exceeded. The drive is stopped as a result of the configured stop response (p9366).
Message value (r9749, interpret decimal):
0: Tolerance for the "safe motion direction positive" function exceeded.
1: Tolerance for the "safe motion direction negative" function exceeded.

Remedy: - check the traversing/motion program in the control.
- check the tolerance for "SDI" function and if required, adapt (p9364).
This message can be acknowledged as follows:
- Deselect the "SDI" function and select again.
- Perform a safe acknowledgment via F-DI or PROFIsafe.

© Siemens AG 2012 All Rights Reserved

Note:
SDI: Safe Direction (safe motion direction)
SI: Safety Integrated
See also: p9364 (SI Motion SDI tolerance (Motor Module)), p9365 (SI Motion SDI delay time (Motor Module)), p9366 (SI Motion SDI stop response (Motor Module))

C30730 SI Motion MM: Reference block for dynamic safely limited speed invalid

Message value: %1

Drive object: VECTOR_G

Reaction: NONE

Acknowledge: IMMEDIATELY (POWER ON)

Cause: The reference block transferred via PROFIsafe is negative.
A reference block is used to generate a referred velocity limit value based on the reference quantity "Velocity limit value SLS1" (p9331[0]).
The drive is stopped as a result of the configured stop response (p9363[0]).
Message value (r9749, interpret decimal):
requested, invalid reference block.

Remedy: In the PROFIsafe telegram, input data S_SLS_LIMIT_IST must be corrected.
This message can only be acknowledged via the Terminal Module 54F (TM54F) or PROFIsafe.
Note:
SI: Safety Integrated
SLS: Safely-Limited Speed

C30770 SI Motion MM: Discrepancy error affecting the fail-safe inputs/outputs

Message value: %1

Drive object: VECTOR_G

Reaction: NONE

Acknowledge: IMMEDIATELY (POWER ON)

Cause: The fail-safe digital inputs/digital outputs (F-DI/F-DO) show a different state longer than that parameterized in p10002 / p10102.
Fault value (r0949, interpret hexadecimal):
yyyyxxxx hex
xxxx: Discrepancy error for fail-safe digital inputs (F-DI).
Bit 0: Discrepancy error for F-DI 0
Bit 1: Discrepancy error for F-DI 1
...
yyyy: Discrepancy error for fail-safe digital outputs (F-DO).
Bit 0: Discrepancy error for F-DO 0
...
Note:
If several discrepancy errors occur consecutively, then this fault is only signaled for the first error that occurs.

Remedy: - check the wiring of the F-DI (contact problems).
Note:
This message can be acknowledged via F-DI or PROFIsafe.
Discrepancy errors of an F-DI can only be completely acknowledged if safe acknowledgement was carried out once the cause of the error was resolved (p10006 or acknowledgment via PROFIsafe). As long as safety acknowledgement was not carried out, the corresponding F-DI stays in the safe state internally.
For cyclic switching operations at the F-DI, it may be necessary to adapt the discrepancy time to the switching frequency.
If the period of a cyclic switching pulse has the order of magnitude of double the value of p10002, then the following formulas must be checked.
p10002 < (tp / 2) - td (discrepancy time must be less than half the period minus the actual discrepancy time)
p10002 >= p9500 (discrepancy time must be no less than P9500)
p10002 > td (discrepancy time must be greater than the switch discrepancy time which may actually apply)
td = possible actual discrepancy time (in ms) that can occur with a switching operation. This must correspond to at least 1 SI sampling cycle (see p9500).
tp = period for a switching operation in ms.
When debounce p10017 is active, the discrepancy time is directly specified by the debounce time.

© Siemens AG 2012 All Rights Reserved

If the period of a cyclic switching pulse has the order of magnitude of twice the debounce time, then the following formulas should be checked.
p10002 < p10017 + 1 ms - td
p10002 > td
p10002 >= p9500
Example:
For a 12 ms SI sampling cycle and a switching frequency of 110 ms (p10017 = 0), the maximum discrepancy time which can be set is as follows:
p10002 <= (110/2 ms) - 12 ms = 43 ms
Rounded-off, p10002 <= 36 ms is obtained (since the discrepancy time can only be accepted as a whole SI sampling cycle, the value will need to be rounded up or down to a whole SI sampling time value if the result is not an exact multiple of an SI sampling cycle).
Note:
F-DI: Failsafe Digital Input
F-DO: Failsafe Digital Output

A30772 SI Motion MM: Test stop failsafe inputs/outputs active

Message value: -

Drive object: VECTOR_G

Reaction: NONE

Acknowledge: NONE

Cause: The test stop for the fail-safe digital inputs (F-DI) and/or fail-safe digital outputs (F-DO) is presently being performed.
Note:
F-DI: Failsafe Digital Input
F-DO: Failsafe Digital Output

Remedy: The alarm disappears automatically after successfully ending or canceling (when a fault condition occurs) the test stop.

F30773 SI Motion MM: Test stop fault Motor Module

Message value: %1

Drive object: VECTOR_G

Reaction: NONE

Acknowledge: IMMEDIATELY (POWER ON)

Cause: A fault has occurred on the MM side during the test stop for the fail-safe outputs.
Fault value (r0949, interpret hexadecimal):
RRRVWXYZ hex:
R: Reserved.
V: Actual state of the DO channel concerned (see X) on the CU (corresponds to the states read back from the hardware, bit 0 = DO 0, bit 1 = DO 1, etc.).
W: Required state of the DO channel concerned (see X, bit 0 = DO 0, bit 1 = DO 1, etc.).
X: DO channels involved, which indicate an error (bit 0 = DO 0, bit 1 = DO 1, etc.).
Y: Reason for the test stop fault.
Z: State of the test stop in which the fault has occurred.
Y: Reason for the test stop fault
Y = 1: MM side in incorrect test stop state (internal fault).
Y = 2: Expected states of the DOs were not fulfilled (CU305: readback via DI 22 / CU240 readback DI 2).
Y = 3: Incorrect timer state on CU side (internal fault)
Y = 4: Expected states of the diag DOs were not fulfilled (CU305: internal readback on MM channel).
Y = 5: Expected states of the second diag DOs were not fulfilled (CU305: internal readback on CU channel).
X and V indicate the DI or Diag-DO state dependent upon the reason for the fault (2, 4 or 5).
In the event of multiple test stop faults, the first one that occurred is shown.
Z: Test stop state and associated test actions
Z = 0 ... 3: Synchronization phase of test stop between CU and Motor Module no switching operations
Z = 4: DO + OFF and DO - OFF
Z = 5: Check to see if states are as expected
Z = 6: DO + ON and DO - ON
Z = 7: Check to see if states are as expected
Z = 8: DO + OFF and DO - ON
Z = 9: Check to see if states are as expected
Z = 10: DO + ON and DO - OFF
Z = 11: Check to see if states are as expected

© Siemens AG 2012 All Rights Reserved

Z = 12: DO + OFF and DO - OFF
Z = 13: Check to see if states are as expected
Z = 14: End of test stop
Diag expected states in table format:
Test stop state: Expectation Mode 1 / Mode 2 / Mode 3 / Mode 4
5: 0/-/-/1
7: 0/-/-/0
9: 0/-/-/0
11: 1/-/-/1
13: 0/-/-/1
Second diag expected states in table format:
Test stop state: Expectation Mode 1 / Mode 2 / Mode 3 / Mode 4
5: -/-/-/1
7: -/-/-/0
9: -/-/-/1
11: -/-/-/0
13: -/-/-/1
DI expected states in table format:
Test stop state: Expectation Mode 1 / Mode 2 / Mode 3 / Mode 4
5: -/1/1/-
7: -/0/0/-
9: -/0/1/-
11: -/0/1/-
13: -/1/1/-
Example:
Fault F01773 (CU) is signaled with fault value = 0001_0127 and fault F30773 (MM) is signaled with fault value 0000_0127.
This means that in state 7 (Z = 7) the state of the external readback signal was not set correctly (Y = 2) after DO-0 (X = 1) was switched to ON/ON.
Fault value 0001_0127 indicates that 0 was expected (W = 0) and 1 (V = 1) was read back from the hardware.
Fault value 0000_0127 on the MM indicates that the states were as expected.
In the case of fault F30773, W and V are always identical; a value of 0 always means that 0 was expected at the readback input but was not present on the other channel (CU).

Remedy: Check the wiring of the F-DOs and restart the test stop.
Note:
The fault is withdrawn if the test stop is successfully completed.
In the event of multiple test stop faults, the first one that occurred is shown.
Once the test stop has been restarted the next queued test stop fault will be signaled (if there is one).

C30797 SI Motion MM: Axis not safely referenced

Message value: %1

Drive object: VECTOR_G

Reaction: NONE

Acknowledge: IMMEDIATELY (POWER ON)

Cause: The standstill position saved before powering down does not match the actual position determined at power-up.
Message value (r9749, interpret decimal):
1: Axis not referenced.
2: User agreement missing.

Remedy: If safe automatic referencing is not possible the user must issue a user agreement for the new position using the softkey. This mean that this position is then designated as safety-relevant.
Note:
SI: Safety Integrated

C30798 SI Motion MM: Test stop running

Message value: -

Drive object: VECTOR_G

Reaction: NONE

Acknowledge: IMMEDIATELY (POWER ON)

Cause: The test stop is active.

Remedy: Not necessary.
The message is withdrawn when the test stop is finished.

© Siemens AG 2012 All Rights Reserved

Note:
SI: Safety Integrated

C30799 SI Motion MM: Acceptance test mode active

Message value: -
Drive object: VECTOR_G
Reaction: NONE
Acknowledge: IMMEDIATELY (POWER ON)
Cause: The acceptance test mode is active. The POWER ON signals of the safety-relevant motion monitoring functions can be acknowledged during the acceptance test using the acknowledgement functions of the higher-level control.
Remedy: Not necessary.
The message is withdrawn when exiting the acceptance test mode.
Note:
SI: Safety Integrated

N30800 (F) Power unit: Group signal

Message value: -
Drive object: B_INF, VECTOR_G
Reaction: OFF2
Acknowledge: NONE
Cause: The power unit has detected at least one fault.
Remedy: Evaluate the other messages that are presently available.
Reaction upon F: OFF2
Acknowl. upon F: IMMEDIATELY

F30801 Power unit DRIVE-CLiQ: Sign-of-life missing

Message value: Component number: %1, fault cause: %2
Drive object: B_INF, VECTOR_G
Reaction: OFF2
Acknowledge: IMMEDIATELY
Cause: A DRIVE-CLiQ communication error has occurred from the Control Unit to the power unit concerned.
The computing time load might be too high.
Fault cause:
10 (= 0A hex):
The sign-of-life bit in the receive telegram is not set.
Note regarding the message value:
The individual information is coded as follows in the message value (r0949/r2124):
0000yyxx hex: yy = component number, xx = error cause
Remedy: - check the electrical cabinet design and cable routing for EMC compliance
- remove DRIVE-CLiQ components that are not required.
- de-select functions that are not required.
- if required, increase the sampling times (p0112, p0115).
- replace the component involved.

F30802 Power unit: Time slice overflow

Message value: -
Drive object: B_INF, VECTOR_G
Reaction: OFF2
Acknowledge: IMMEDIATELY
Cause: A time slice overflow has occurred.
Remedy: - carry out a POWER ON (power off/on) for all components.
- upgrade firmware to later version.
- contact the Hotline.

© Siemens AG 2012 All Rights Reserved

F30804 (N, A) Power unit: CRC

Message value: %1
Drive object: B_INF, VECTOR_G
Reaction: Infeed: OFF2 (OFF1)
Vector: OFF2 (OFF1, OFF3)
Acknowledge: IMMEDIATELY
Cause: A CRC error has occurred for the power unit.
Remedy: - carry out a POWER ON (power off/on) for all components.
- upgrade firmware to later version.
- contact the Hotline.
Reaction upon N: NONE
Acknowl. upon N: NONE
Reaction upon A: NONE
Acknowl. upon A: NONE

F30805 Power unit: EPROM checksum error

Message value: %1
Drive object: B_INF, VECTOR_G
Reaction: OFF2
Acknowledge: IMMEDIATELY
Cause: Internal parameter data is corrupted.
Fault value (r0949, interpret hexadecimal):
01: EEPROM access error.
02: Too many blocks in the EEPROM.
Remedy: Replace the module.

F30809 Power unit: Switching information not valid

Message value: -
Drive object: B_INF, VECTOR_G
Reaction: OFF2
Acknowledge: IMMEDIATELY
Cause: For 3P gating unit, the following applies:
The last switching status word in the setpoint telegram is identified by the end ID. Such an end ID was not found.
Remedy: - carry out a POWER ON (power off/on) for all components.
- upgrade firmware to later version.
- contact the Hotline.

A30810 (F) Power unit: Watchdog timer

Message value: -
Drive object: B_INF, VECTOR_G
Reaction: NONE
Acknowledge: NONE
Cause: When booting it was detected that the cause of the previous reset was an SAC watchdog timer overflow.
Remedy: - carry out a POWER ON (power off/on) for all components.
- upgrade firmware to later version.
- contact the Hotline.
Reaction upon F: NONE (OFF2)
Acknowl. upon F: IMMEDIATELY

F30820 Power unit DRIVE-CLiQ: Telegram error

Message value: Component number: %1, fault cause: %2
Drive object: B_INF, VECTOR_G
Reaction: OFF2
Acknowledge: IMMEDIATELY
Cause: A DRIVE-CLiQ communication error has occurred from the Control Unit to the power unit concerned.

© Siemens AG 2012 All Rights Reserved

Fault cause:
1 (= 01 hex):
Checksum error (CRC error).
2 (= 02 hex):
Telegram is shorter than specified in the length byte or in the receive list.
3 (= 03 hex):
Telegram is longer than specified in the length byte or in the receive list.
4 (= 04 hex):
The length of the receive telegram does not match the receive list.
5 (= 05 hex):
The type of the receive telegram does not match the receive list.
6 (= 06 hex):
The address of the component in the telegram and in the receive list do not match.
7 (= 07 hex):
A SYNC telegram is expected - but the received telegram is not a SYNC telegram.
8 (= 08 hex):
No SYNC telegram is expected - but the received telegram is one.
9 (= 09 hex):
The error bit in the receive telegram is set.
16 (= 10 hex):
The receive telegram is too early.
Note regarding the message value:
The individual information is coded as follows in the message value (r0949/r2124):
0000yyxx hex: yy = component number, xx = error cause

Remedy: - carry out a POWER ON (power off/on).
- check the electrical cabinet design and cable routing for EMC compliance
- check the DRIVE-CLiQ wiring (interrupted cable, contacts, ...).
See also: p9916 (DRIVE-CLiQ data transfer error shutdown threshold slave)

F30835 Power unit DRIVE-CLiQ: Cyclic data transfer error

Message value: Component number: %1, fault cause: %2

Drive object: B_INF, VECTOR_G

Reaction: OFF2

Acknowledge: IMMEDIATELY

Cause: A DRIVE-CLiQ communication error has occurred from the Control Unit to the power unit concerned. The nodes do not send and receive in synchronism.
Fault cause:
33 (= 21 hex):
The cyclic telegram has not been received.
34 (= 22 hex):
Timeout in the telegram receive list.
64 (= 40 hex):
Timeout in the telegram send list.
Note regarding the message value:
The individual information is coded as follows in the message value (r0949/r2124):
0000yyxx hex: yy = component number, xx = error cause

Remedy: - carry out a POWER ON.
- replace the component involved.
See also: p9916 (DRIVE-CLiQ data transfer error shutdown threshold slave)

F30836 Power unit DRIVE-CLiQ: Send error for DRIVE-CLiQ data

Message value: Component number: %1, fault cause: %2

Drive object: B_INF, VECTOR_G

Reaction: OFF2

Acknowledge: IMMEDIATELY

Cause: A DRIVE-CLiQ communication error has occurred from the Control Unit to the power unit concerned. Data were not able to be sent.
Fault cause:
65 (= 41 hex):
Telegram type does not match send list.
Note regarding the message value:

© Siemens AG 2012 All Rights Reserved

The individual information is coded as follows in the message value (r0949/r2124):
0000yyxx hex: yy = component number, xx = error cause

Remedy: Carry out a POWER ON.

F30837 Power unit DRIVE-CLiQ: Component fault

Message value: Component number: %1, fault cause: %2

Drive object: B_INF, VECTOR_G

Reaction: OFF2

Acknowledge: IMMEDIATELY

Cause: Fault detected on the DRIVE-CLiQ component concerned. Faulty hardware cannot be excluded.
Fault cause:
32 (= 20 hex):
Error in the telegram header.
35 (= 23 hex):
Receive error: The telegram buffer memory contains an error.
66 (= 42 hex):
Send error: The telegram buffer memory contains an error.
67 (= 43 hex):
Send error: The telegram buffer memory contains an error.
Note regarding the message value:
The individual information is coded as follows in the message value (r0949/r2124):
0000yyxx hex: yy = component number, xx = error cause

Remedy:
- check the DRIVE-CLiQ wiring (interrupted cable, contacts, ...).
- check the electrical cabinet design and cable routing for EMC compliance
- if required, use another DRIVE-CLiQ socket (p9904).
- replace the component involved.

F30845 Power unit DRIVE-CLiQ: Cyclic data transfer error

Message value: Component number: %1, fault cause: %2

Drive object: B_INF, VECTOR_G

Reaction: OFF2

Acknowledge: IMMEDIATELY

Cause: A DRIVE-CLiQ communication error has occurred from the Control Unit to the power unit concerned.
Fault cause:
11 (= 0B hex):
Synchronization error during alternating cyclic data transfer.
Note regarding the message value:
The individual information is coded as follows in the message value (r0949/r2124):
0000yyxx hex: yy = component number, xx = error cause

Remedy: Carry out a POWER ON (power off/on).
See also: p9916 (DRIVE-CLiQ data transfer error shutdown threshold slave)

F30850 Power unit: Internal software error

Message value: %1

Drive object: B_INF, VECTOR_G

Reaction: Infeed: OFF1 (NONE, OFF2)
Vector: OFF1 (NONE, OFF2, OFF3)

Acknowledge: POWER ON

Cause: An internal software error has occurred in the power unit.
Fault value (r0949, interpret decimal):
Only for internal Siemens troubleshooting.

Remedy:
- replace power unit.
- if required, upgrade the firmware in the power unit.
- contact the Hotline.

© Siemens AG 2012 All Rights Reserved

F30851 Power unit DRIVE-CLiQ (CU): Sign-of-life missing

Message value: Component number: %1, fault cause: %2

Drive object: B_INF, VECTOR_G

Reaction: Infeed: OFF2 (NONE, OFF1)
Vector: OFF2 (NONE, OFF1, OFF3)

Acknowledge: IMMEDIATELY

Cause: A DRIVE-CLiQ communication error has occurred from the power unit to the Control Unit involved.
The DRIVE-CLiQ component did not set the sign-of-life to the Control Unit.
Fault cause:
10 (= 0A hex):
The sign-of-life bit in the receive telegram is not set.
Note regarding the message value:
The individual information is coded as follows in the message value (r0949/r2124):
0000yyxx hex: yy = component number, xx = error cause

Remedy: Upgrade the firmware of the component involved.

A30853 Power unit: Sign-of-life error cyclic data

Message value: -

Drive object: B_INF, VECTOR_G

Reaction: NONE

Acknowledge: NONE

Cause: The power unit has detected that the cyclic setpoint telegrams of the Control Unit have not been updated on time. At least two sign-of-life errors have occurred within the window set in p7788.

Remedy: - check the electrical cabinet design and cable routing for EMC compliance
- reduce the size of the window (p7788) for monitoring.

F30860 Power unit DRIVE-CLiQ (CU): Telegram error

Message value: Component number: %1, fault cause: %2

Drive object: B_INF, VECTOR_G

Reaction: OFF2

Acknowledge: IMMEDIATELY

Cause: A DRIVE-CLiQ communication error has occurred from the power unit to the Control Unit involved.
Fault cause:
1 (= 01 hex):
Checksum error (CRC error).
2 (= 02 hex):
Telegram is shorter than specified in the length byte or in the receive list.
3 (= 03 hex):
Telegram is longer than specified in the length byte or in the receive list.
4 (= 04 hex):
The length of the receive telegram does not match the receive list.
5 (= 05 hex):
The type of the receive telegram does not match the receive list.
6 (= 06 hex):
The address of the power unit in the telegram and in the receive list do not match.
9 (= 09 hex):
The error bit in the receive telegram is set.
16 (= 10 hex):
The receive telegram is too early.
17 (= 11 hex):
CRC error and the receive telegram is too early.
18 (= 12 hex):
The telegram is shorter than that specified in the length byte or in the receive list and the receive telegram is too early.
19 (= 13 hex):
The telegram is longer than that specified in the length byte or in the receive list and the receive telegram is too early.
20 (= 14 hex):
The length of the receive telegram does not match the receive list and the receive telegram is too early.
21 (= 15 hex):
The type of the receive telegram does not match the receive list and the receive telegram is too early.

© Siemens AG 2012 All Rights Reserved

22 (= 16 hex):
The address of the power unit in the telegram and in the receive list does not match and the receive telegram is too early.
25 (= 19 hex):
The error bit in the receive telegram is set and the receive telegram is too early.
Note regarding the message value:
The individual information is coded as follows in the message value (r0949/r2124):
0000yyxx hex: yy = component number, xx = error cause

Remedy: - carry out a POWER ON (power off/on).
- check the electrical cabinet design and cable routing for EMC compliance
- check the DRIVE-CLiQ wiring (interrupted cable, contacts, ...).
See also: p9915 (DRIVE-CLiQ data transfer error shutdown threshold master)

F30875 Power unit DRIVE-CLiQ (CU): Supply voltage failed

Message value: Component number: %1, fault cause: %2

Drive object: B_INF, VECTOR_G

Reaction: OFF2

Acknowledge: IMMEDIATELY

Cause: The DRIVE-CLiQ communication from the DRIVE-CLiQ component involved to the Control Unit signals that the supply voltage has failed.
Fault cause:
9 (= 09 hex):
The power supply voltage for the components has failed.
Note regarding the message value:
The individual information is coded as follows in the message value (r0949/r2124):
0000yyxx hex: yy = component number, xx = error cause

Remedy: - carry out a POWER ON (power off/on).
- check the power supply voltage wiring for the DRIVE-CLiQ component (interrupted cable, contacts, ...).
- check the dimensioning of the power supply for the DRIVE-CLiQ component.

F30885 CU DRIVE-CLiQ (CU): Cyclic data transfer error

Message value: Component number: %1, fault cause: %2

Drive object: B_INF, VECTOR_G

Reaction: OFF2

Acknowledge: IMMEDIATELY

Cause: A DRIVE-CLiQ communication error has occurred from the power unit to the Control Unit involved.
The nodes do not send and receive in synchronism.
Fault cause:
26 (= 1A hex):
Sign-of-life bit in the receive telegram not set and the receive telegram is too early.
33 (= 21 hex):
The cyclic telegram has not been received.
34 (= 22 hex):
Timeout in the telegram receive list.
64 (= 40 hex):
Timeout in the telegram send list.
98 (= 62 hex):
Error at the transition to cyclic operation.
Note regarding the message value:
The individual information is coded as follows in the message value (r0949/r2124):
0000yyxx hex: yy = component number, xx = error cause

Remedy: - check the power supply voltage of the component involved.
- carry out a POWER ON.
- replace the component involved.
See also: p9915 (DRIVE-CLiQ data transfer error shutdown threshold master)

© Siemens AG 2012 All Rights Reserved

F30886 PU DRIVE-CLiQ (CU): Error when sending DRIVE-CLiQ data

Message value: Component number: %1, fault cause: %2

Drive object: B_INF, VECTOR_G

Reaction: OFF2

Acknowledge: IMMEDIATELY

Cause: A DRIVE-CLiQ communication error has occurred from the power unit to the Control Unit involved.
Data were not able to be sent.
Fault cause:
65 (= 41 hex):
Telegram type does not match send list.
Note regarding the message value:
The individual information is coded as follows in the message value (r0949/r2124):
0000yyxx hex: yy = component number, xx = error cause

Remedy: Carry out a POWER ON.

F30887 Power unit DRIVE-CLiQ (CU): Component fault

Message value: Component number: %1, fault cause: %2

Drive object: B_INF, VECTOR_G

Reaction: OFF2

Acknowledge: IMMEDIATELY

Cause: Fault detected on the DRIVE-CLiQ component (power unit) involved. Faulty hardware cannot be excluded.
Fault cause:
32 (= 20 hex):
Error in the telegram header.
35 (= 23 hex):
Receive error: The telegram buffer memory contains an error.
66 (= 42 hex):
Send error: The telegram buffer memory contains an error.
67 (= 43 hex):
Send error: The telegram buffer memory contains an error.
96 (= 60 hex):
Response received too late during runtime measurement.
97 (= 61 hex):
Time taken to exchange characteristic data too long.
Note regarding the message value:
The individual information is coded as follows in the message value (r0949/r2124):
0000yyxx hex: yy = component number, xx = error cause

Remedy: - check the DRIVE-CLiQ wiring (interrupted cable, contacts, ...).
- check the electrical cabinet design and cable routing for EMC compliance
- if required, use another DRIVE-CLiQ socket (p9904).
- replace the component involved.

F30895 PU DRIVE-CLiQ (CU): Alternating cyclic data transfer error

Message value: Component number: %1, fault cause: %2

Drive object: B_INF, TM150, TM31, VECTOR_G

Reaction: Infeed: OFF2 (NONE, OFF1)
Vector: OFF2 (IASC/DCBRAKE, NONE, OFF1, OFF3, STOP1, STOP2)

Acknowledge: IMMEDIATELY

Cause: A DRIVE-CLiQ communication error has occurred from the power unit to the Control Unit involved.
Fault cause:
11 (= 0B hex):
Synchronization error during alternating cyclic data transfer.
Note regarding the message value:
The individual information is coded as follows in the message value (r0949/r2124):
0000yyxx hex: yy = component number, xx = error cause

Remedy: Carry out a POWER ON.
See also: p9915 (DRIVE-CLiQ data transfer error shutdown threshold master)

© Siemens AG 2012 All Rights Reserved

F30896 Power unit DRIVE-CLiQ (CU): Inconsistent component properties

Message value: Component number: %1

Drive object: B_INF, VECTOR_G

Reaction: Infeed: OFF2 (NONE, OFF1)
Vector: OFF2 (IASC/DCBRAKE, NONE, OFF1, OFF3, STOP1, STOP2)

Acknowledge: IMMEDIATELY

Cause: The properties of the DRIVE-CLiQ component (power unit), specified by the fault value, have changed in an incompatible fashion with respect to the properties when booted. One cause can be, e.g. that a DRIVE-CLiQ cable or DRIVE-CLiQ component has been replaced.
Fault value (r0949, interpret decimal):
Component number.

Remedy: - carry out a POWER ON.
- when a component is replaced, the same component type and if possible the same firmware version should be used.
- when a cable is replaced, only cables whose length is the same as or as close as possible to the length of the original cables should be used (ensure compliance with the maximum cable length).

F30899 (N, A) Power unit: Unknown fault

Message value: New message: %1

Drive object: B_INF, VECTOR_G

Reaction: Infeed: NONE (OFF1, OFF2)
Vector: NONE (IASC/DCBRAKE, OFF1, OFF2, OFF3, STOP1, STOP2)

Acknowledge: IMMEDIATELY (POWER ON)

Cause: A fault occurred on the power unit that cannot be interpreted by the Control Unit firmware.
This can occur if the firmware on this component is more recent than the firmware on the Control Unit.
Fault value (r0949, interpret decimal):
Fault number.
Note:
If required, the significance of this new fault can be read about in a more recent description of the Control Unit.

Remedy: - replace the firmware on the power unit by an older firmware version (r0128).
- upgrade the firmware on the Control Unit (r0018).

Reaction upon N: NONE

Acknowl. upon N: NONE

Reaction upon A: NONE

Acknowl. upon A: NONE

F30903 Power unit: I2C bus error occurred

Message value: %1

Drive object: B_INF, VECTOR_G

Reaction: Infeed: NONE (OFF1, OFF2)
Vector: NONE (IASC/DCBRAKE, OFF1, OFF2, OFF3, STOP1, STOP2)

Acknowledge: IMMEDIATELY

Cause: Communications error with an EEPROM or A/D converter.
Fault value (r0949, interpret hexadecimal):
80000000 hex:
- internal software error.
00000001 hex ... 0000FFFF hex:
- module fault.

Remedy: Re fault value = 80000000 hex:
- upgrade firmware to later version.
Re fault value = 00000001 hex ... 0000FFFF hex:
- replace the module.

© Siemens AG 2012 All Rights Reserved

F30907 Power unit: FPGA configuration unsuccessful

Message value: -
Drive object: B_INF
Reaction: OFF2 (NONE, OFF1)
Acknowledge: IMMEDIATELY
Cause: During initialization within the power unit, an internal software error has occurred.
Remedy: - if required, upgrade the firmware in the power unit.
- replace power unit.
- contact the Hotline.

A30920 (F) Power unit: Temperature sensor fault

Message value: %1
Drive object: B_INF, VECTOR_G
Reaction: NONE
Acknowledge: NONE
Cause: When evaluating the temperature sensor, an error occurred.
Alarm value (r2124, interpret decimal):
1: Wire breakage or sensor not connected (KTY: R > 1630 Ohm, PT100: R > 375 Ohm).
2: Measured resistance too low (PTC: R < 20 Ohm, KTY: R < 50 Ohm, PT100: R < 30 Ohm).
Note:
A temperature sensor is connected to the following terminals:
- "Booksize" format: X21.1/.2 or X22.1/.2
- "Chassis" format: X41.4/.3
Information on temperature sensors is provided in the following literature for example:
SINAMICS S120 Function Manual Drive Functions
Remedy: - make sure that the sensor is connected correctly.
- replace the sensor.
Reaction upon F: Infeed: NONE (OFF1, OFF2)
Vector: NONE (IASC/DCBRAKE, OFF1, OFF2, OFF3, STOP1, STOP2)
Acknowl. upon F: IMMEDIATELY

F30950 Power unit: Internal software error

Message value: %1
Drive object: B_INF, VECTOR_G
Reaction: OFF2
Acknowledge: POWER ON
Cause: An internal software error has occurred.
Fault value (r0949, interpret decimal):
Information about the fault source.
Only for internal Siemens troubleshooting.
Remedy: - If necessary, upgrade the firmware in the power unit to a later version.
- contact the Hotline.

A30999 (F, N) Power unit: Unknown alarm

Message value: New message: %1
Drive object: B_INF, VECTOR_G
Reaction: NONE
Acknowledge: NONE
Cause: An alarm occurred on the power unit that cannot be interpreted by the Control Unit firmware.
This can occur if the firmware on this component is more recent than the firmware on the Control Unit.
Alarm value (r2124, interpret decimal):
Alarm number.
Note:
If required, the significance of this new alarm can be read about in a more recent description of the Control Unit.
Remedy: - replace the firmware on the power unit by an older firmware version (r0128).
- upgrade the firmware on the Control Unit (r0018).

© Siemens AG 2012 All Rights Reserved

Reaction upon F: Infeed: NONE (OFF1, OFF2)
Vector: NONE (IASC/DCBRAKE, OFF1, OFF2, OFF3, STOP1, STOP2)
Acknowl. upon F: IMMEDIATELY (POWER ON)
Reaction upon N: NONE
Acknowl. upon N: NONE

F31100 (N, A) Encoder 1: Zero mark distance error

Message value: %1
Drive object: B_INF, ENC, VECTOR_G
Reaction: Infeed: NONE (OFF1, OFF2)
Vector: ENCODER (IASC/DCBRAKE, OFF1, OFF2, OFF3, STOP1, STOP2)
Acknowledge: PULSE INHIBIT
Cause: The measured zero mark distance does not correspond to the parameterized zero mark distance.
For distance-coded encoders, the zero mark distance is determined from zero marks detected pairs. This means that if a zero mark is missing, depending on the pair generation, this cannot result in a fault and also has no effect in the system.
The zero mark distance for the zero mark monitoring is set in p0425 (rotary encoder) or p0424 (linear encoder).
Fault value (r0949, interpret decimal):
Last measured zero mark distance in increments (4 increments = 1 encoder pulse).
The sign designates the direction of motion when detecting the zero mark distance.
See also: p0491 (Motor encoder fault response ENCODER)
Remedy: - check that the encoder cables are routed in compliance with EMC.
- check the plug connections
. check the encoder type (encoder with equidistant zero marks).
- adapt the parameter for the distance between zero marks (p0424, p0425).
- if message output above speed threshold, reduce filter time if necessary (p0438).
- replace the encoder or encoder cable
Reaction upon N: NONE
Acknowl. upon N: NONE
Reaction upon A: NONE
Acknowl. upon A: NONE

F31101 (N, A) Encoder 1: Zero mark failed

Message value: %1
Drive object: B_INF, ENC, VECTOR_G
Reaction: Infeed: NONE (OFF1, OFF2)
Vector: ENCODER (IASC/DCBRAKE, NONE, OFF1, OFF2, OFF3, STOP1, STOP2)
Acknowledge: PULSE INHIBIT
Cause: The 1.5 x parameterized zero mark distance was exceeded.
The zero mark distance for the zero mark monitoring is set in p0425 (rotary encoder) or p0424 (linear encoder).
Fault value (r0949, interpret decimal):
Number of increments after POWER ON or since the last zero mark that was detected (4 increments = 1 encoder pulse).
See also: p0491 (Motor encoder fault response ENCODER)
Remedy: - check that the encoder cables are routed in compliance with EMC.
- check the plug connections
. check the encoder type (encoder with equidistant zero marks).
- adapt the parameter for the clearance between zero marks (p0425).
- if message output above speed threshold, reduce filter time if necessary (p0438).
- when p0437.1 is active, check p4686.
- replace the encoder or encoder cable
Reaction upon N: NONE
Acknowl. upon N: NONE
Reaction upon A: NONE
Acknowl. upon A: NONE

© Siemens AG 2012 All Rights Reserved

F31103 (N, A) Encoder 1: Amplitude error, track R

Message value: R track: %1

Drive object: B_INF, ENC, VECTOR_G

Reaction: Infeed: NONE
Vector: ENCODER (IASC/DCBRAKE, NONE)

Acknowledge: PULSE INHIBIT

Cause: The amplitude of the reference track signal (track R) does not lie within the tolerance bandwidth for encoder 1.
The fault can be initiated when the unipolar voltage level is exceeded (RP/RN) or if the differential amplitude is undershot.
Fault value (r0949, interpret hexadecimal):
yyyyxxxx hex: yyyy = 0, xxxx = Signal level, track R (16 bits with sign)
The response thresholds of the unipolar signal levels of the encoder are between < 1400 mV and > 3500 mV.
The response threshold for the differential signal level of the encoder is < -1600 mV.
A signal level of 500 mV peak value corresponds to the numerical value 5333 hex = 21299 dec.
Note:
The analog value of the amplitude error is not measured at the same time with the hardware fault output by the Sensor Module.
The fault value can only be represented between -32767 ... 32767 dec (-770 ... 770 mV).
The signal level is not evaluated unless the following conditions are satisfied:
- Sensor Module properties available (r0459.31 = 1).
- Monitoring active (p0437.31 = 1).
See also: p0491 (Motor encoder fault response ENCODER)

Remedy: - check the speed range; frequency characteristic (amplitude characteristic) of the measuring equipment might not be sufficient for the speed range
- check that the encoder cables and shielding are routed in compliance with EMC.
- check the plug connections and contacts of the encoder cable.
- check whether the zero mark is connected and the signal cables RP and RN have been connected correctly
- replace the encoder cable.
- if the coding disk is soiled or the lighting aged, replace the encoder.

Reaction upon N: NONE

Acknowl. upon N: NONE

Reaction upon A: NONE

Acknowl. upon A: NONE

F31110 (N, A) Encoder 1: Serial communications error

Message value: Fault cause: %1 bin

Drive object: B_INF, ENC, VECTOR_G

Reaction: Infeed: NONE
Vector: ENCODER (IASC/DCBRAKE, NONE)

Acknowledge: PULSE INHIBIT

Cause: Serial communication protocol transfer error between the encoder and evaluation module.
Fault value (r0949, interpret binary):
Bit 0: Alarm bit in the position protocol.
Bit 1: Incorrect quiescent level on the data line.
Bit 2: Encoder does not respond (does not supply a start bit within 50 ms).
Bit 3: CRC error: The checksum in the protocol from the encoder does not match the data.
Bit 4: Encoder acknowledgement error: The encoder incorrectly understood the task (request) or cannot execute it.
Bit 5: Internal error in the serial driver: An illegal mode command was requested.
Bit 6: Timeout when cyclically reading.
Bit 7: Timeout for the register communication.
Bit 8: Protocol is too long (e.g. > 64 bits).
Bit 9: Receive buffer overflow.
Bit 10: Frame error when reading twice.
Bit 11: Parity error.
Bit 12: Data line signal level error during the monoflop time.
Bit 13: Data line incorrect.
Bit 14: Fault for the register communication.

© Siemens AG 2012 All Rights Reserved

Remedy: Re fault value, bit 0 = 1:
- Enc defect F31111 may provide additional details.
Re fault value, bit 1 = 1:
- Incorrect encoder type / replace the encoder or encoder cable.
Re fault value, bit 2 = 1:
- Incorrect encoder type / replace the encoder or encoder cable.
Re fault value, bit 3 = 1:
- EMC / connect the cable shield, replace the encoder or encoder cable.
Re fault value, bit 4 = 1:
- EMC / connect the cable shield, replace the encoder or encoder cable, replace the Sensor Module.
Re fault value, bit 5 = 1:
- EMC / connect the cable shield, replace the encoder or encoder cable, replace the Sensor Module.
Re fault value, bit 6 = 1:
- Update Sensor Module firmware.
Re fault value, bit 7 = 1:
- Incorrect encoder type / replace the encoder or encoder cable.
Re fault value, bit 8 = 1:
- Check parameterization (p0429.2).
Re fault value, bit 9 = 1:
- EMC / connect the cable shield, replace the encoder or encoder cable, replace the Sensor Module.
Re fault value, bit 10 = 1:
- Check parameterization (p0429.2, p0449).
Re fault value, bit 11 = 1:
- Check parameterization (p0436).
Re fault value, bit 12 = 1:
- Check parameterization (p0429.6).
Re fault value, bit 13 = 1:
- Check data line.
Re fault value, bit 14 = 1:
- Incorrect encoder type / replace the encoder or encoder cable.

Reaction upon N: NONE
Acknowl. upon N: NONE
Reaction upon A: NONE
Acknowl. upon A: NONE

F31111 (N, A) Encoder 1: Absolute encoder internal fault

Message value: Fault cause: %1 bin, additional information: %2

Drive object: B_INF, ENC, VECTOR_G

Reaction: Infeed: NONE
Vector: ENCODER (IASC/DCBRAKE, NONE)

Acknowledge: PULSE INHIBIT

Cause: The absolute encoder fault word supplies fault bits that have been set.
Fault value (r0949, interpret binary):
yyyyxxxx hex: yyyy = supplementary information, xxxx = fault cause
yyyy = 0:
Bit 0: Lighting system failed.
Bit 1: Signal amplitude too low.
Bit 2: Position value incorrect.
Bit 3: Encoder power supply overvoltage condition.
Bit 4: Encoder power supply undervoltage condition.
Bit 5: Encoder power supply overcurrent condition.
Bit 6: The battery must be changed.
yyyy = 1:
Bit 0: Signal amplitude outside the control range.
Bit 1: Error multiturn interface
Bit 2: Internal data error (singleturn/multiturn not with single steps).
Bit 3: Error EEPROM interface.
Bit 4: SAR converter error.
Bit 5: Fault for the register data transfer.
Bit 6: Internal error identified at the error pin (nErr).
Bit 7: Temperature threshold exceeded or fallen below.
See also: p0491 (Motor encoder fault response ENCODER)

© Siemens AG 2012 All Rights Reserved

Remedy: For yyyy = 0:
Re fault value, bit 0 = 1:
Encoder is defective. Replace the encoder, where the motor encoder has a direct DRIVE-CLiQ socket: Replace the motor.
Re fault value, bit 1 = 1:
Encoder is defective. Replace the encoder, where the motor encoder has a direct DRIVE-CLiQ socket: Replace the motor.
Re fault value, bit 2 = 1:
Encoder is defective. Replace the encoder, where the motor encoder has a direct DRIVE-CLiQ socket: Replace the motor.
Re fault value, bit 3 = 1:
5 V power supply voltage fault.
When using an SMC: Check the plug-in cable between the encoder and SMC or replace the SMC.
When a motor encoder with a direct DRIVE-CLiQ connection is used: Replace the motor.
Re fault value, bit 4 = 1:
5 V power supply voltage fault.
When using an SMC: Check the plug-in cable between the encoder and SMC or replace the SMC.
When using a motor with DRIVE-CLiQ: Replace the motor.
Re fault value, bit 5 = 1:
Encoder is defective. Replace the encoder, where the motor encoder has a direct DRIVE-CLiQ socket: Replace the motor.
Re fault value, bit 6 = 1:
The battery must be changed (only for encoders with battery back-up).
For yyyy = 1:
Encoder is defective. Replace encoder.

Reaction upon N: NONE
Acknowl. upon N: NONE
Reaction upon A: NONE
Acknowl. upon A: NONE

F31112 (N, A) Encoder 1: Error bit set in the serial protocol

Message value: %1
Drive object: B_INF, ENC, VECTOR_G
Reaction: Infeed: NONE
Vector: ENCODER (IASC/DCBRAKE, NONE)
Acknowledge: PULSE INHIBIT
Cause: The encoder sends a set error bit via the serial protocol.
Fault value (r0949, interpret binary):
Bit 0: Fault bit in the position protocol.
Remedy: For fault value, bit 0 = 1:
In the case of an EnDat encoder, F31111 may provide further details.

Reaction upon N: NONE
Acknowl. upon N: NONE
Reaction upon A: NONE
Acknowl. upon A: NONE

F31115 (N, A) Encoder 1: Amplitude error track A or B (A^2 + B^2)

Message value: A track: %1, B-track: %2
Drive object: B_INF, ENC, VECTOR_G
Reaction: Infeed: NONE
Vector: ENCODER (IASC/DCBRAKE, NONE)
Acknowledge: PULSE INHIBIT
Cause: The amplitude (root of A^2 + B^2) for encoder 1 exceeds the permissible tolerance.
Fault value (r0949, interpret hexadecimal):
yyyyxxxx hex:
yyyy = Signal level, track B (16 bits with sign).
xxxx = Signal level, track A (16 bits with sign).
The nominal signal level of the encoder must lie in the range 375 mV to 600 mV (500 mV -25/+20 %).
The response thresholds are < 170 mV (observe the frequency response of the encoder) and > 750 mV.

© Siemens AG 2012 All Rights Reserved

A signal level of 500 mV peak value corresponds to the numerical value 5333 hex = 21299 dec.
Note for sensors modules for resolvers (e. g. SMC10):
The nominal signal level is at 2900 mV (2.0 Vrms). The response thresholds are < 1070 mV and > 3582 mV.
A signal level of 2900 mV peak value corresponds to the numerical value 6666 hex = 26214 dec.
Note:
The analog values of the amplitude error are not measured at the same time with the hardware fault output by the Sensor Module.
See also: p0491 (Motor encoder fault response ENCODER)

Remedy:
- check that the encoder cables and shielding are routed in compliance with EMC.
- check the plug connections
- replace the encoder or encoder cable
- check the Sensor Module (e.g. contacts).

The following applies to measuring systems without their own bearing system:
- adjust the scanning head and check the bearing system of the measuring wheel.

The following applies for measuring systems with their own bearing system:
- ensure that the encoder housing is not subject to any axial force.

Reaction upon N: NONE
Acknowl. upon N: NONE
Reaction upon A: NONE
Acknowl. upon A: NONE

F31116 (N, A) Encoder 1: Amplitude error monitoring track A + B

Message value: A track: %1, B-track: %2
Drive object: B_INF, ENC, VECTOR_G
Reaction: Infeed: NONE
Vector: ENCODER (IASC/DCBRAKE, NONE)
Acknowledge: IMMEDIATELY
Cause: The amplitude of the rectified encoder signals A and B and the amplitude from the roots of A^2 + B^2 for encoder 1 are not within the tolerance bandwidth.
Fault value (r0949, interpret hexadecimal):
yyyyxxxx hex:
yyyy = Signal level, track B (16 bits with sign).
xxxx = Signal level, track A (16 bits with sign).
The nominal signal level of the encoder must lie in the range 375 mV to 600 mV (500 mV -25/+20 %).
The response thresholds are < 130 mV (observe the frequency response of the encoder) and > 955 mV.
A signal level of 500 mV peak value corresponds to the numerical value 5333 hex = 21299 dec.
Note:
The analog values of the amplitude error are not measured at the same time with the hardware fault output by the Sensor Module.
See also: p0491 (Motor encoder fault response ENCODER)

Remedy:
- check that the encoder cables and shielding are routed in compliance with EMC.
- check the plug connections
- replace the encoder or encoder cable
- check the Sensor Module (e.g. contacts).

Reaction upon N: NONE
Acknowl. upon N: NONE
Reaction upon A: NONE
Acknowl. upon A: NONE

F31117 (N, A) Encoder 1: Inversion error signals A/B/R

Message value: Fault cause: %1 bin
Drive object: B_INF, ENC, VECTOR_G
Reaction: Infeed: NONE
Vector: ENCODER (IASC/DCBRAKE, NONE)
Acknowledge: IMMEDIATELY
Cause: For a square-wave encoder (bipolar, double ended) signals A*, B* and R* are not inverted with respect to signals A, B and R.

© Siemens AG 2012 All Rights Reserved

Fault value (r0949, interpret binary):
Bits 0 ... 15: Only for internal Siemens troubleshooting.
Bit 16: Error track A.
Bit 17: Error track B.
Bit 18: Error track R.
Note:
For SMC30 (order no.. 6SL3055-0AA00-5CA0 and 6SL3055-0AA00-5CA1 only), CUA32, and CU310, the following applies:
A square-wave encoder without track R is used and track monitoring (p0405.2 = 1) is activated.
See also: p0491 (Motor encoder fault response ENCODER)

Remedy: - Check the encoder/cable.
- Does the encoder supply signals and the associated inverted signals?
Note:
For SMC30 (order no. 6SL3055-0AA00-5CA0 and 6SL3055-0AA00-5CA1 only), the following applies:
- check the setting of p0405 (p0405.2 = 1 is only possible if the encoder is connected at X520).
For a square-wave encoder without track R, the following jumpers must be set for the connection at X520 (SMC30) or X23 (CUA32, CU310):
- pin 10 (reference signal R) <--> pin 7 (encoder power supply, ground)
- pin 11 (reference signal R inverted) <--> pin 4 (encoder power supply)

Reaction upon N: NONE
Acknowl. upon N: NONE
Reaction upon A: NONE
Acknowl. upon A: NONE

F31118 (N, A) Encoder 1: Speed difference outside the tolerance range

Message value: %1
Drive object: B_INF, ENC, VECTOR_G
Reaction: Infeed: NONE
Vector: ENCODER (IASC/DCBRAKE, NONE)
Acknowledge: PULSE INHIBIT
Cause: For an HTL/TTL encoder, the speed difference has exceeded the value in p0492 over several sampling cycles.
The change to the averaged speed actual value - if applicable - is monitored in the current controller sampling time.
Encoder 1 is used as motor encoder and can be effective has fault response to change over to encoderless operation.
Fault value (r0949, interpret decimal):
Only for internal Siemens troubleshooting.
See also: p0491 (Motor encoder fault response ENCODER), p0492
Remedy: - check the tachometer feeder cable for interruptions.
- check the grounding of the tachometer shielding.
- if required, increase the maximum speed difference per sampling cycle (p0492).

Reaction upon N: NONE
Acknowl. upon N: NONE
Reaction upon A: NONE
Acknowl. upon A: NONE

F31120 (N, A) Encoder 1: Power supply voltage fault

Message value: Fault cause: %1 bin
Drive object: B_INF, ENC, VECTOR_G
Reaction: Infeed: NONE
Vector: ENCODER (IASC/DCBRAKE, NONE)
Acknowledge: PULSE INHIBIT
Cause: A power supply fault was detected for encoder 1.
Fault value (r0949, interpret binary):
Bit 0: Undervoltage condition on the sense line.
Bit 1: Overcurrent condition for the encoder power supply.
Bit 2: Overcurrent condition for encoder power supply on cable resolver excitation negative.
Bit 3: Overcurrent condition for encoder power supply on cable resolver excitation positive.
Bit 4: The 24 V power supply through the Power Module (PM) is overloaded.
Bit 5: Overcurrent at the EnDat connection of the converter.

© Siemens AG 2012 All Rights Reserved

Bit 6: Overvoltage at the EnDat connection of the converter.
Bit 7: Hardware fault at the EnDat connection of the converter.
Note:
If the encoder cables 6FX2002-2EQ00-.... and 6FX2002-2CH00-.... are interchanged, this can result in the encoder being destroyed because the pins of the operating voltage are reversed.
See also: p0491 (Motor encoder fault response ENCODER)

Remedy: Re fault value, bit 0 = 1:
- correct encoder cable connected?
- check the plug connections of the encoder cable.
- SMC30: Check the parameterization (p0404.22).

Re fault value, bit 1 = 1:
- correct encoder cable connected?
- replace the encoder or encoder cable

Re fault value, bit 2 = 1:
- correct encoder cable connected?
- replace the encoder or encoder cable

Re fault value, bit 3 = 1:
- correct encoder cable connected?
- replace the encoder or encoder cable

Re fault value, bit 5 = 1:
- Measuring unit correctly connected at the converter?
- Replace the measuring unit or the cable to the measuring unit.

Re fault value, bit 6, 7 = 1:
- Replace the defective EnDat 2.2 converter.

Reaction upon N: NONE
Acknowl. upon N: NONE
Reaction upon A: NONE
Acknowl. upon A: NONE

F31121 (N, A) Encoder 1: Coarse position error

Message value: -
Drive object: B_INF, ENC, VECTOR_G
Reaction: Infeed: NONE
Vector: ENCODER (NONE)
Acknowledge: PULSE INHIBIT
Cause: For the actual value sensing, an error was detected on the module.
As a result of this error, it must be assumed that the actual value sensing supplies an incorrect coarse position.
See also: p0491 (Motor encoder fault response ENCODER)
Remedy: Replace the motor with DRIVE-CLiQ or the appropriate Sensor Module.
Reaction upon N: NONE
Acknowl. upon N: NONE
Reaction upon A: NONE
Acknowl. upon A: NONE

F31122 Encoder 1: Internal power supply voltage faulty

Message value: %1
Drive object: B_INF, ENC, VECTOR_G
Reaction: Infeed: NONE
Vector: ENCODER
Acknowledge: IMMEDIATELY
Cause: Fault in internal reference voltage of ASICs for encoder 1.
Fault value (r0949, interpret decimal):
1: Reference voltage error.
2: Internal undervoltage.
3: Internal overvoltage.
Remedy: Replace the motor with DRIVE-CLiQ or the appropriate Sensor Module.

© Siemens AG 2012 All Rights Reserved

F31123 (N, A) Encoder 1: Signal level A/B unipolar outside tolerance

Message value: Fault cause: %1 bin

Drive object: B_INF, ENC, VECTOR_G

Reaction: Infeed: NONE
Vector: ENCODER (IASC/DCBRAKE, NONE)

Acknowledge: PULSE INHIBIT

Cause: The unipolar level (AP/AN or BP/BN) for encoder 1 is outside the permissible tolerance.
Fault value (r0949, interpret binary):
Bit 0 = 1: Either AP or AN outside the tolerance.
Bit 16 = 1: Either BP or BN outside the tolerance.
The unipolar nominal signal level of the encoder must lie in the range 2500 mV +/- 500 mV.
The response thresholds are < 1700 mV and > 3300 mV.
Note:
The signal level is not evaluated unless the following conditions are satisfied:
- Sensor Module properties available (r0459.31 = 1).
- Monitoring active (p0437.31 = 1).
See also: p0491 (Motor encoder fault response ENCODER)

Remedy: - make sure that the encoder cables and shielding are installed in an EMC-compliant manner.
- check the plug connections and contacts of the encoder cable.
- check the short-circuit of a signal cable with mass or the operating voltage.
- replace the encoder cable.

Reaction upon N: NONE

Acknowl. upon N: NONE

Reaction upon A: NONE

Acknowl. upon A: NONE

F31125 (N, A) Encoder 1: Amplitude error track A or B overcontrolled

Message value: A track: %1, B-track: %2

Drive object: B_INF, ENC, VECTOR_G

Reaction: Infeed: NONE
Vector: ENCODER (IASC/DCBRAKE, NONE)

Acknowledge: PULSE INHIBIT

Cause: The amplitude of track A or B for encoder 1 exceeds the permissible tolerance band.
Fault value (r0949, interpret hexadecimal):
yyyyxxxx hex:
yyyy = Signal level, track B (16 bits with sign).
xxxx = Signal level, track A (16 bits with sign).
The nominal signal level of the encoder must lie in the range 375 mV to 600 mV (500 mV -25/+20 %).
The response threshold is > 750 mV. This fault also occurs if the A/D converter is overcontrolled.
A signal level of 500 mV peak value corresponds to the numerical value 5333 hex = 21299 dec.
Note for sensors modules for resolvers (e. g. SMC10):
The nominal signal level is at 2900 mV (2.0 Vrms). The response threshold is > 3582 mV.
A signal level of 2900 mV peak value corresponds to the numerical value 6666 hex = 26214 dec.
Note:
The analog values of the amplitude error are not measured at the same time with the hardware fault output by the Sensor Module.
See also: p0491 (Motor encoder fault response ENCODER)

Remedy: - check that the encoder cables and shielding are routed in compliance with EMC.
- replace the encoder or encoder cable

Reaction upon N: NONE

Acknowl. upon N: NONE

Reaction upon A: NONE

Acknowl. upon A: NONE

© Siemens AG 2012 All Rights Reserved

F31126 (N, A) Encoder 1: Amplitude AB too high

Message value: Amplitude: %1, Angle: %2

Drive object: B_INF, ENC, VECTOR_G

Reaction: Infeed: NONE
Vector: ENCODER (IASC/DCBRAKE, NONE)

Acknowledge: PULSE INHIBIT

Cause: The amplitude (root of A^2 + B^2 or |A| + |B|) for encoder 1 exceeds the permissible tolerance.
Fault value (r0949, interpret hexadecimal):
yyyyxxxx hex:
yyyy = Angle
xxxx = Amplitude, i.e. root from A^2 + B^2 (16 bits without sign)
The nominal signal level of the encoder must lie in the range 375 mV to 600 mV (500 mV -25/+20 %).
The response threshold for (|A| + |B|) is > 1120 mV or the root of (A^2 + B^2) > 955 mV.
A signal level of 500 mV peak value corresponds to the numerical value of 299A hex = 10650 dec.
The angle 0 ... FFFF hex corresponds to 0 ... 360 degrees of the fine position. Zero degrees is present at the negative zero crossover of track B.
Note:
The analog values of the amplitude error are not measured at the same time with the hardware fault output by the Sensor Module.
See also: p0491 (Motor encoder fault response ENCODER)

Remedy: - check that the encoder cables and shielding are routed in compliance with EMC.
- replace the encoder or encoder cable

Reaction upon N: NONE

Acknowl. upon N: NONE

Reaction upon A: NONE

Acknowl. upon A: NONE

F31129 (N, A) Encoder 1: Position difference, hall sensor/track C/D and A/B too large

Message value: %1

Drive object: B_INF, ENC, VECTOR_G

Reaction: Infeed: NONE
Vector: ENCODER (IASC/DCBRAKE, NONE)

Acknowledge: PULSE INHIBIT

Cause: The error for track C/D is greater than +/-15 ° mechanical or +/-60 ° electrical or the error for the Hall signals is greater than +/-60 ° electrical.
One period of track C/D corresponds to 360 ° mechanical.
One period of the Hall signal corresponds to 360 ° electrical.
The monitoring responds if, for example, Hall sensors are connected as equivalent for the C/D tracks with the incorrect rotational sense or supply values that are not accurate enough.
After the fine synchronization using one reference mark or 2 reference marks for distance-coded encoders, this fault is no longer initiated, but instead, Alarm A31429.
Fault value (r0949, interpret decimal):
For track C/D, the following applies:
Measured deviation as mechanical angle (16 bits with sign, 182 dec corresponds to 1 °).
For Hall signals, the following applies:
Measured deviation as electrical angle (16 bits with sign, 182 dec corresponds to 1 °).
See also: p0491 (Motor encoder fault response ENCODER)

Remedy: - track C or D not connected.
- correct the direction of rotation of the Hall sensor possibly connected as equivalent for track C/D.
- check that the encoder cables are routed in compliance with EMC.
- check the adjustment of the Hall sensor.

Reaction upon N: NONE

Acknowl. upon N: NONE

Reaction upon A: NONE

Acknowl. upon A: NONE

© Siemens AG 2012 All Rights Reserved

F31130 (N, A) Encoder 1: Zero mark and position error from the coarse synchronization

Message value: Angular deviation, electrical: %1, angle, mechanical: %2

Drive object: B_INF, ENC, VECTOR_G

Reaction: Infeed: NONE
Vector: ENCODER (IASC/DCBRAKE, NONE, OFF1, OFF2, OFF3, STOP1, STOP2)

Acknowledge: PULSE INHIBIT

Cause: After initializing the pole position using track C/D, Hall signals or pole position identification routine, the zero mark was detected outside the permissible range. For distance-coded encoders, the test is carried out after passing 2 zero marks. Fine synchronization was not carried out.
When initializing via track C/D (p0404) then it is checked whether the zero mark occurs in an angular range of +/-18 ° mechanical.
When initializing via Hall sensors (p0404) or pole position identification (p1982) it is checked whether the zero mark occurs in an angular range of +/-60 ° electrical.
Fault value (r0949, interpret hexadecimal):
yyyyxxxx hex
yyyy: Determined mechanical zero mark position (can only be used for track C/D).
xxxx: Deviation of the zero mark from the expected position as electrical angle.
Scaling: 32768 dec = 180 °
See also: p0491 (Motor encoder fault response ENCODER)

Remedy: - Check p0431 and, if necessary, correct (trigger via p1990 = 1 if necessary).
- check that the encoder cables are routed in compliance with EMC.
- check the plug connections
- if the Hall sensor is used as an equivalent for track C/D, check the connection.
- Check the connection of track C or D.
- replace the encoder or encoder cable

Reaction upon N: NONE

Acknowl. upon N: NONE

Reaction upon A: NONE

Acknowl. upon A: NONE

F31131 (N, A) Encoder 1: Deviation, position incremental/absolute too large

Message value: %1

Drive object: B_INF, ENC, VECTOR_G

Reaction: Infeed: NONE
Vector: ENCODER (IASC/DCBRAKE, NONE, OFF1, OFF2, OFF3, STOP1, STOP2)

Acknowledge: PULSE INHIBIT

Cause: Absolute encoder:
When cyclically reading the absolute position, an excessively high difference to the incremental position was detected. The absolute position that was read is rejected.
Limit value for the deviation:
- EnDat encoder: Is supplied from the encoder and is a minimum of 2 quadrants (e.g. EQI 1325 > 2 quadrants, EQN 1325 > 50 quadrants).
- other encoders: 15 pulses = 60 quadrants.
Incremental encoder:
When the zero pulse is passed, a deviation in the incremental position was detected.
For equidistant zero marks, the following applies:
- The first zero mark passed supplies the reference point for all subsequent checks. The other zero marks must have n times the distance referred to the first zero mark.
For distance-coded zero marks, the following applies:
- the first zero mark pair supplies the reference point for all subsequent checks. The other zero mark pairs must have the expected distance to the first zero mark pair.
Fault value (r0949, interpret decimal):
Deviation in quadrants (1 pulse = 4 quadrants).
See also: p0491 (Motor encoder fault response ENCODER)

Remedy: - check that the encoder cables are routed in compliance with EMC.
- check the plug connections
- replace the encoder or encoder cable
- check whether the coding disk is dirty or there are strong ambient magnetic fields.
- adapt the parameter for the clearance between zero marks (p0425).
- if message output above speed threshold, reduce filter time if necessary (p0438).

© Siemens AG 2012 All Rights Reserved

Reaction upon N: NONE
Acknowl. upon N: NONE
Reaction upon A: NONE
Acknowl. upon A: NONE

F31135 Encoder 1: Fault when determining the position

Message value: Fault cause: %1 bin

Drive object: B_INF, ENC, VECTOR_G

Reaction: Infeed: NONE
Vector: ENCODER (IASC/DCBRAKE, NONE)

Acknowledge: PULSE INHIBIT

Cause: The DRIVE-CLiQ encoder supplies status information via bits in an internal status/fault word.
Some of these bits cause this fault to be triggered. Other bits are status displays. The status/fault word is displayed in the fault value.
Fault value (r0949, interpret binary):
Bit 0: F1 (safety status display)
Bit 1: F2 (safety status display)
Bit 2: Lighting (reserved)
Bit 3: Signal amplitude (reserved)
Bit 4: Position value (reserved)
Bit 5: Overvoltage (reserved)
Bit 6: Undervoltage (reserved)
Bit 7: Overcurrent (reserved)
Bit 8: Battery (reserved)
Bit 16: Lighting (--> F3x135, x = 1, 2, 3)
Bit 17: Signal amplitude (--> F3x135, x = 1, 2, 3)
Bit 18: Singleturn position 1 (--> F3x135, x = 1, 2, 3)
Bit 19: Overvoltage (--> F3x135, x = 1, 2, 3)
Bit 20: Undervoltage (--> F3x135, x = 1, 2, 3)
Bit 21: Overcurrent (--> F3x135, x = 1, 2, 3)
Bit 22: Temperature exceeded (--> F3x405, x = 1, 2, 3)
Bit 23: Singleturn position 2 (safety status display)
Bit 24: Singleturn system (--> F3x135, x = 1, 2, 3)
Bit 25: Singleturn power down (--> F3x135, x = 1, 2, 3)
Bit 26: Multiturn position 1 (--> F3x136, x = 1, 2, 3)
Bit 27: Multiturn position 2 (--> F3x136, x = 1, 2, 3)
Bit 28: Multiturn system (--> F3x136, x = 1, 2, 3)
Bit 29: Multiturn power down (--> F3x136, x = 1, 2, 3)
Bit 30: Multiturn overflow/underflow (--> F3x136, x = 1, 2, 3)
Bit 31: Multiturn battery (reserved)

Remedy: Replace DRIVE-CLiQ encoder.

F31136 Encoder 1: Error when determining multiturn information

Message value: Fault cause: %1 bin

Drive object: B_INF, ENC, VECTOR_G

Reaction: Infeed: NONE
Vector: ENCODER (IASC/DCBRAKE, NONE)

Acknowledge: PULSE INHIBIT

Cause: The DRIVE-CLiQ encoder supplies status information via bits in an internal status/fault word.
Some of these bits cause this fault to be triggered. Other bits are status displays. The status/fault word is displayed in the fault value.
Fault value (r0949, interpret binary):
Bit 0: F1 (safety status display)
Bit 1: F2 (safety status display)
Bit 2: Lighting (reserved)
Bit 3: Signal amplitude (reserved)
Bit 4: Position value (reserved)
Bit 5: Overvoltage (reserved)
Bit 6: Undervoltage (reserved)
Bit 7: Overcurrent (reserved)

© Siemens AG 2012 All Rights Reserved

Bit 8: Battery (reserved)
Bit 16: Lighting (--> F3x135, x = 1, 2, 3)
Bit 17: Signal amplitude (--> F3x135, x = 1, 2, 3)
Bit 18: Singleturn position 1 (--> F3x135, x = 1, 2, 3)
Bit 19: Overvoltage (--> F3x135, x = 1, 2, 3)
Bit 20: Undervoltage (--> F3x135, x = 1, 2, 3)
Bit 21: Overcurrent (--> F3x135, x = 1, 2, 3)
Bit 22: Temperature exceeded (--> F3x405, x = 1, 2, 3)
Bit 23: Singleturn position 2 (safety status display)
Bit 24: Singleturn system (--> F3x135, x = 1, 2, 3)
Bit 25: Singleturn power down (--> F3x135, x = 1, 2, 3)
Bit 26: Multiturn position 1 (--> F3x136, x = 1, 2, 3)
Bit 27: Multiturn position 2 (--> F3x136, x = 1, 2, 3)
Bit 28: Multiturn system (--> F3x136, x = 1, 2, 3)
Bit 29: Multiturn power down (--> F3x136, x = 1, 2, 3)
Bit 30: Multiturn overflow/underflow (--> F3x136, x = 1, 2, 3)
Bit 31: Multiturn battery (reserved)

Remedy: Replace DRIVE-CLiQ encoder.

F31137 Encoder 1: Internal fault when determining the position

Message value: Fault cause: %1 bin

Drive object: B_INF, ENC, VECTOR_G

Reaction: Infeed: NONE
Vector: ENCODER (IASC/DCBRAKE, NONE)

Acknowledge: PULSE INHIBIT

Cause: The DRIVE-CLiQ encoder fault word supplies fault bits that have been set.
Fault value (r0949, interpret binary):
Only for internal Siemens troubleshooting.

Remedy: Replace encoder.

F31138 Encoder 1: Internal error when determining multiturn information

Message value: Fault cause: %1 bin

Drive object: B_INF, ENC, VECTOR_G

Reaction: Infeed: NONE
Vector: ENCODER (IASC/DCBRAKE, NONE)

Acknowledge: PULSE INHIBIT

Cause: The DRIVE-CLiQ encoder fault word supplies fault bits that have been set.
Fault value (r0949, interpret binary):
Only for internal SIEMENS troubleshooting.

Remedy: Replace encoder.

F31150 (N, A) Encoder 1: Initialization error

Message value: %1

Drive object: B_INF, ENC, VECTOR_G

Reaction: Infeed: NONE
Vector: ENCODER (IASC/DCBRAKE, NONE, OFF1, OFF2, OFF3, STOP1, STOP2)

Acknowledge: PULSE INHIBIT

Cause: Encoder functionality selected in p0404 is not operating correctly.
Fault value (r0949, interpret hexadecimal):
Encoder malfunction.
The bit assignment corresponds to that of p0404 (e.g. bit 5 set: Error track C/D).
See also: p0404 (Encoder configuration effective), p0491 (Motor encoder fault response ENCODER)

Remedy: - Check that p0404 is correctly set.
- check the encoder type used (incremental/absolute) and for SMCxx, the encoder cable.
- if relevant, note additional fault messages that describe the fault in detail.

Reaction upon N: NONE

Acknowl. upon N: NONE

© Siemens AG 2012 All Rights Reserved

Reaction upon A: NONE
Acknowl. upon A: NONE

F31151 (N, A) Encoder 1: Encoder speed for initialization AB too high

Message value: %1
Drive object: B_INF, ENC, VECTOR_G
Reaction: Infeed: NONE
Vector: ENCODER (IASC/DCBRAKE, NONE, OFF1, OFF2, OFF3, STOP1, STOP2)
Acknowledge: PULSE INHIBIT
Cause: The encoder speed is too high during while initializing the sensor.
Remedy: Reduce the speed of the encoder accordingly during initialization.
If necessary, de-activate monitoring (p0437.29).
See also: p0437 (Sensor Module configuration extended)
Reaction upon N: NONE
Acknowl. upon N: NONE
Reaction upon A: NONE
Acknowl. upon A: NONE

F31152 (N, A) Encoder 1: Maximum input frequency exceeded

Message value: %1
Drive object: B_INF, ENC, VECTOR_G
Reaction: Infeed: ENCODER (NONE, OFF1, OFF2)
Vector: ENCODER (IASC/DCBRAKE, NONE, OFF1, OFF2, OFF3, STOP1, STOP2)
Acknowledge: PULSE INHIBIT
Cause: The maximum input frequency of the encoder evaluation has been exceeded.
Fault value (r0949, interpret decimal):
Actual input frequency in Hz.
See also: p0408 (Rotary encoder pulse No.)
Remedy: - Reduce the speed.
- Use an encoder with a lower pulse number (p0408).
Reaction upon N: NONE
Acknowl. upon N: NONE
Reaction upon A: NONE
Acknowl. upon A: NONE

F31160 (N, A) Encoder 1: Analog sensor channel A failed

Message value: %1
Drive object: B_INF, ENC, VECTOR_G
Reaction: Infeed: ENCODER (NONE)
Vector: ENCODER (IASC/DCBRAKE, NONE)
Acknowledge: PULSE INHIBIT
Cause: The input voltage of the analog sensor is outside the permissible limits.
Fault value (r0949, interpret decimal):
1: Input voltage outside detectable measuring range.
2: Input voltage outside the measuring range set in (p4673).
3: The absolute value of the input voltage has exceeded the range limit (p4676).
Remedy: For fault value = 1:
- check the output voltage of the analog sensor.
For fault value = 2:
- check the voltage setting for each encoder period (p4673).
For fault value = 3:
- check the range limit setting and increase it if necessary (p4676).
Reaction upon N: NONE
Acknowl. upon N: NONE
Reaction upon A: NONE
Acknowl. upon A: NONE

© Siemens AG 2012 All Rights Reserved

F31161 (N, A) Encoder 1: Analog sensor channel B failed

Message value: %1

Drive object: B_INF, ENC, VECTOR_G

Reaction: Infeed: ENCODER (NONE)
Vector: ENCODER (IASC/DCBRAKE, NONE)

Acknowledge: PULSE INHIBIT

Cause: The input voltage of the analog sensor is outside the permissible limits.
Fault value (r0949, interpret decimal):
1: Input voltage outside detectable measuring range.
2: Input voltage outside the measuring range set in (p4675).
3: The absolute value of the input voltage has exceeded the range limit (p4676).

Remedy: For fault value = 1:
- check the output voltage of the analog sensor.
For fault value = 2:
- check the voltage setting for each encoder period (p4675).
For fault value = 3:
- check the range limit setting and increase it if necessary (p4676).

Reaction upon N: NONE

Acknowl. upon N: NONE

Reaction upon A: NONE

Acknowl. upon A: NONE

F31163 (N, A) Encoder 1: Analog sensor position value exceeds limit value

Message value: %1

Drive object: B_INF, ENC, VECTOR_G

Reaction: Infeed: ENCODER (NONE)
Vector: ENCODER (IASC/DCBRAKE, NONE)

Acknowledge: PULSE INHIBIT

Cause: The position value has exceeded the permissible range of -0.5 ... +0.5.
Fault value (r0949, interpret decimal):
1: Position value from the LVDT sensor.
2: Position value from the encoder characteristic.

Remedy: For fault value = 1:
- Check the LVDT ratio (p4678).
- check the reference signal connection at track B.
For fault value = 2:
- check the coefficients of the characteristic (p4663 ... p4666).

Reaction upon N: NONE

Acknowl. upon N: NONE

Reaction upon A: NONE

Acknowl. upon A: NONE

A31400 (F, N) Encoder 1: Alarm threshold zero mark distance error

Message value: %1

Drive object: B_INF, ENC, VECTOR_G

Reaction: NONE

Acknowledge: NONE

Cause: The measured zero mark distance does not correspond to the parameterized zero mark distance.
For distance-coded encoders, the zero mark distance is determined from zero marks detected pairs. This means that if a zero mark is missing, depending on the pair generation, this cannot result in a fault and also has no effect in the system.
The zero mark distance for the zero mark monitoring is set in p0425 (rotary encoder) or p0424 (linear encoder).
Alarm value (r2124, interpret decimal):
Last measured zero mark distance in increments (4 increments = 1 encoder pulse).
The sign designates the direction of motion when detecting the zero mark distance.

© Siemens AG 2012 All Rights Reserved

Remedy: - check that the encoder cables are routed in compliance with EMC.
- check the plug connections
. check the encoder type (encoder with equidistant zero marks).
- adapt the parameter for the distance between zero marks (p0424, p0425).
- replace the encoder or encoder cable

Reaction upon F: Infeed: NONE (OFF1, OFF2)
Vector: NONE (ENCODER, IASC/DCBRAKE, OFF1, OFF2, OFF3, STOP1, STOP2)

Acknowl. upon F: IMMEDIATELY

Reaction upon N: NONE

Acknowl. upon N: NONE

A31401 (F, N) Encoder 1: Alarm threshold zero mark failed

Message value: %1

Drive object: B_INF, ENC, VECTOR_G

Reaction: NONE

Acknowledge: NONE

Cause: The 1.5 x parameterized zero mark distance was exceeded.
The zero mark distance for the zero mark monitoring is set in p0425 (rotary encoder) or p0424 (linear encoder).
Alarm value (r2124, interpret decimal):
Number of increments after POWER ON or since the last zero mark that was detected (4 increments = 1 encoder pulse).

Remedy: - check that the encoder cables are routed in compliance with EMC.
- check the plug connections
. check the encoder type (encoder with equidistant zero marks).
- adapt the parameter for the clearance between zero marks (p0425).
- replace the encoder or encoder cable

Reaction upon F: Infeed: NONE (OFF1, OFF2)
Vector: NONE (ENCODER, IASC/DCBRAKE, OFF1, OFF2, OFF3, STOP1, STOP2)

Acknowl. upon F: IMMEDIATELY

Reaction upon N: NONE

Acknowl. upon N: NONE

F31405 (N, A) Encoder 1: Temperature in the encoder evaluation inadmissible

Message value: %1

Drive object: B_INF, ENC, VECTOR_G

Reaction: Infeed: NONE (OFF1, OFF2)
Vector: ENCODER (IASC/DCBRAKE, NONE, OFF1, OFF2, OFF3, STOP1, STOP2)

Acknowledge: IMMEDIATELY (POWER ON)

Cause: The encoder evaluation for a motor with DRIVE-CLiQ has detected an inadmissible temperature.
The fault threshold is 125 ° C.
Alarm value (r2124, interpret decimal):
Measured board/module temperature in 0.1 °C.

Remedy: Reduce the ambient temperature for the DRIVE-CLiQ connection of the motor.

Reaction upon N: NONE

Acknowl. upon N: NONE

Reaction upon A: NONE

Acknowl. upon A: NONE

A31407 (F, N) Encoder 1: Function limit reached

Message value: %1

Drive object: B_INF, ENC, VECTOR_G

Reaction: NONE

Acknowledge: NONE

Cause: The encoder has reached one of its function limits. A service is recommended.

© Siemens AG 2012 All Rights Reserved

Alarm value (r2124, interpret decimal):
1 : Incremental signals
3 : Absolute track
4 : Code connection

Remedy: Perform service. Replace the encoder if necessary.
Note:
The actual functional reserve of an encoder can be displayed via r4651.
See also: p4650 (Encoder functional reserve component number), r4651 (Encoder functional reserve)

Reaction upon F: Infeed: NONE (OFF1, OFF2)
Vector: NONE (ENCODER, IASC/DCBRAKE, OFF1, OFF2, OFF3, STOP1, STOP2)

Acknowl. upon F: IMMEDIATELY

Reaction upon N: NONE

Acknowl. upon N: NONE

A31410 (F, N) Encoder 1: Serial communications

Message value: Fault cause: %1 bin

Drive object: B_INF, ENC, VECTOR_G

Reaction: NONE

Acknowledge: NONE

Cause: Serial communication protocol transfer error between the encoder and evaluation module.
Alarm value (r2124, interpret binary):
Bit 0: Alarm bit in the position protocol.
Bit 1: Incorrect quiescent level on the data line.
Bit 2: Encoder does not respond (does not supply a start bit within 50 ms).
Bit 3: CRC error: The checksum in the protocol from the encoder does not match the data.
Bit 4: Encoder acknowledgement error: The encoder incorrectly understood the task (request) or cannot execute it.
Bit 5: Internal error in the serial driver: An illegal mode command was requested.
Bit 6: Timeout when cyclically reading.
Bit 8: Protocol is too long (e.g. > 64 bits).
Bit 9: Receive buffer overflow.
Bit 10: Frame error when reading twice.
Bit 11: Parity error.
Bit 12: Data line signal level error during the monoflop time.

Remedy: - check that the encoder cables are routed in compliance with EMC.
- check the plug connections
- replace encoder.

Reaction upon F: Infeed: NONE (OFF1, OFF2)
Vector: NONE (ENCODER, IASC/DCBRAKE, OFF1, OFF2, OFF3, STOP1, STOP2)

Acknowl. upon F: IMMEDIATELY

Reaction upon N: NONE

Acknowl. upon N: NONE

A31411 (F, N) Encoder 1: Absolute encoder signals internal alarms

Message value: Fault cause: %1 bin, additional information: %2

Drive object: B_INF, ENC, VECTOR_G

Reaction: NONE

Acknowledge: NONE

Cause: The absolute encoder fault word includes alarm bits that have been set.
Alarm value (r2124, interpret binary):
yyyyxxxx hex: yyyy = supplementary information, xxxx = fault cause
yyyy = 0:
Bit 0: Frequency exceeded (speed too high).
Bit 1: Temperature exceeded.
Bit 2: Control reserve, lighting system exceeded.
Bit 3: Battery discharged.
Bit 4: Reference point passed.
yyyy = 1:
Bit 0: Signal amplitude outside the control range.
Bit 1: Error multiturn interface

© Siemens AG 2012 All Rights Reserved

Bit 2: Internal data error (singleturn/multiturn not with single steps).
Bit 3: Error EEPROM interface.
Bit 4: SAR_converter error.
Bit 5: Fault for the register data transfer.
Bit 6: Internal error identified at the error pin (nErr).
Bit 7: Temperature threshold exceeded or fallen below.
See also: p0491 (Motor encoder fault response ENCODER)

Remedy: Replace encoder.

Reaction upon F: Infeed: NONE (OFF1, OFF2)
Vector: NONE (ENCODER, IASC/DCBRAKE, OFF1, OFF2, OFF3, STOP1, STOP2)

Acknowl. upon F: IMMEDIATELY

Reaction upon N: NONE

Acknowl. upon N: NONE

A31412 (F, N) Encoder 1: Error bit set in the serial protocol

Message value: %1

Drive object: B_INF, ENC, VECTOR_G

Reaction: NONE

Acknowledge: NONE

Cause: The encoder sends a set error bit via the serial protocol.
Alarm value (r2124, interpret binary):
Bit 0: Fault bit in the position protocol.
Bit 1: Alarm bit in the position protocol.

Remedy: - carry out a POWER ON (power off/on) for all components.
- check that the encoder cables are routed in compliance with EMC.
- check the plug connections
- replace encoder.

Reaction upon F: Infeed: NONE (OFF1, OFF2)
Vector: NONE (ENCODER, IASC/DCBRAKE, OFF1, OFF2, OFF3, STOP1, STOP2)

Acknowl. upon F: IMMEDIATELY

Reaction upon N: NONE

Acknowl. upon N: NONE

A31414 (F, N) Encoder 1: Amplitude error track C or D (C^2 + D^2)

Message value: C track: %1, D track: %2

Drive object: B_INF, ENC, VECTOR_G

Reaction: NONE

Acknowledge: NONE

Cause: The amplitude (C^2 + D^2) of track C or D of the encoder or from the Hall signals, is not within the tolerance bandwidth.
Alarm value (r2124, interpret hexadecimal):
yyyyxxxx hex:
yyyy = Signal level, track D (16 bits with sign).
xxxx = Signal level, track C (16 bits with sign).
The nominal signal level of the encoder must lie in the range 375 mV to 600 mV (500 mV -25/+20 %).
The response thresholds are < 230 mV (observe the frequency response of the encoder) and > 750 mV.
A signal level of 500 mV peak value corresponds to the numerical value 5333 hex = 21299 dec.
Note:
If the amplitude is not within the tolerance bandwidth, then it cannot be used to initialize the start position.

Remedy: - check that the encoder cables are routed in compliance with EMC.
- check the plug connections
- replace the encoder or encoder cable
- check the Sensor Module (e.g. contacts).
- check the Hall sensor box

Reaction upon F: Infeed: NONE (OFF1, OFF2)
Vector: NONE (ENCODER, IASC/DCBRAKE, OFF1, OFF2, OFF3, STOP1, STOP2)

Acknowl. upon F: IMMEDIATELY

© Siemens AG 2012 All Rights Reserved

Reaction upon N: NONE
Acknowl. upon N: NONE

A31415 (F, N) Encoder 1: Amplitude alarm track A or B (A^2 + B^2)

Message value: Amplitude: %1, Angle: %2

Drive object: B_INF, ENC, VECTOR_G

Reaction: NONE

Acknowledge: NONE

Cause: The amplitude (root of A^2 + B^2) for encoder 1 exceeds the permissible tolerance.
Alarm value (r2124, interpret hexadecimal):
yyyyxxxx hex:
yyyy = Angle
xxxx = Amplitude, i.e. root from A^2 + B^2 (16 bits without sign)
The nominal signal level of the encoder must lie in the range 375 mV to 600 mV (500 mV -25/+20 %).
The response threshold is < 230 mV (observe the frequency response of the encoder).
A signal level of 500 mV peak value corresponds to the numerical value 299A hex = 10650 dec.
The angle 0 ... FFFF hex corresponds to 0 ... 360 degrees of the fine position. Zero degrees is present at the negative zero crossover of track B.
Note for sensors modules for resolvers (e. g. SMC10):
The nominal signal level is at 2900 mV (2.0 Vrms). The response threshold is < 1414 mV (1.0 Vrms).
A signal level of 2900 mV peak value corresponds to the numerical value 3333 hex = 13107 dec.
Note:
The analog values of the amplitude error are not measured at the same time with the hardware fault output by the Sensor Module.
See also: p0491 (Motor encoder fault response ENCODER)

Remedy: - check the speed range, frequency characteristic (amplitude characteristic) of the measuring equipment is not sufficient for the speed range.
- check that the encoder cables and shielding are routed in compliance with EMC.
- check the plug connections
- replace the encoder or encoder cable
- check the Sensor Module (e.g. contacts).
- if the coding disk is soiled or the lighting aged, replace the encoder.

Reaction upon F: Infeed: NONE (OFF1, OFF2)
Vector: NONE (ENCODER, IASC/DCBRAKE, OFF1, OFF2, OFF3, STOP1, STOP2)

Acknowl. upon F: IMMEDIATELY

Reaction upon N: NONE

Acknowl. upon N: NONE

A31418 (F, N) Encoder 1: Speed difference per sampling rate exceeded

Message value: %1

Drive object: B_INF, ENC, VECTOR_G

Reaction: NONE

Acknowledge: NONE

Cause: For an HTL/TTL encoder, the speed difference between two sampling cycles has exceeded the value in p0492.
The change to the averaged speed actual value - if applicable - is monitored in the current controller sampling time.
Alarm value (r2124, interpret decimal):
Only for internal Siemens troubleshooting.
See also: p0492

Remedy: - check the tachometer feeder cable for interruptions.
- check the grounding of the tachometer shielding.
- if required, increase the setting of p0492.

Reaction upon F: Infeed: NONE (OFF1, OFF2)
Vector: NONE (IASC/DCBRAKE, OFF1, OFF2, OFF3, STOP1, STOP2)

Acknowl. upon F: IMMEDIATELY

Reaction upon N: NONE

Acknowl. upon N: NONE

© Siemens AG 2012 All Rights Reserved

A31419 (F, N) Encoder 1: Track A or B outside tolerance

Message value: %1

Drive object: B_INF, ENC, VECTOR_G

Reaction: NONE

Acknowledge: NONE

Cause: The amplitude/phase/offset correction for track A or B is at the limit.
Amplitude error correction: Amplitude B / Amplitude A = 0.78 ... 1.27
Phase: <84 degrees or >96 degrees
SMC20: Offset correction: +/-140 mV
SMC10: Offset correction: +/-650 mV
Alarm value (r2124, interpret hexadecimal):
xxxx1: Minimum of the offset correction, track B
xxxx2: Maximum of the offset correction, track B
xxx1x: Minimum of the offset correction, track A
xxx2x: Maximum of the offset correction, track A
xx1xx: Minimum of the amplitude correction, track B/A
xx2xx: Maximum of the amplitude correction, track B/A
x1xxx: Minimum of the phase error correction
x2xxx: Maximum of the phase error correction
1xxxx: Minimum of the cubic correction
2xxxx: Maximum of the cubic correction
See also: p0491 (Motor encoder fault response ENCODER)

Remedy: - check mechanical mounting tolerances for encoders without their own bearings (e.g. toothed-wheel encoders).
- check the plug connections (also the transition resistance).
- check the encoder signals.
- replace the encoder or encoder cable

Reaction upon F: Infeed: NONE (OFF1, OFF2)
Vector: NONE (ENCODER, IASC/DCBRAKE, OFF1, OFF2, OFF3, STOP1, STOP2)

Acknowl. upon F: IMMEDIATELY

Reaction upon N: NONE

Acknowl. upon N: NONE

A31421 (F, N) Encoder 1: Coarse position error

Message value: %1

Drive object: B_INF, ENC, VECTOR_G

Reaction: NONE

Acknowledge: NONE

Cause: For the actual value sensing, an error was detected. As a result of this error, it must be assumed that the actual value sensing supplies an incorrect coarse position.
Alarm value (r2124, interpret decimal):
3: The absolute position of the serial protocol and track A/B differ by half an encoder pulse. The absolute position must have its zero position in the quadrants in which both tracks are negative. In the case of a fault, the position can be incorrect by one encoder pulse.

Remedy: Re alarm value = 3:
- For a standard encoder with cable, contact the manufacturer where relevant.
- correct the assignment of the tracks to the position value that is serially transferred. To do this, the two tracks must be connected, inverted, at the Sensor Module (interchange A with A* and B with B*) or, for a programmable encoder, check the zero offset of the position.

Reaction upon F: Infeed: NONE (OFF1, OFF2)
Vector: NONE (ENCODER, IASC/DCBRAKE, OFF1, OFF2, OFF3, STOP1, STOP2)

Acknowl. upon F: IMMEDIATELY

Reaction upon N: NONE

Acknowl. upon N: NONE

© Siemens AG 2012 All Rights Reserved

A31422 (F, N) Encoder 1: Pulses per revolution square-wave encoder outside tolerance bandwidth

Message value: %1

Drive object: B_INF, ENC, VECTOR_G

Reaction: NONE

Acknowledge: NONE

Cause: The measured zero mark distance does not correspond to the parameterized zero mark distance.
This alarm is triggered with active square-wave encoder PPR correction and re-parameterized fault 31131 if the accumulator contains larger values than p4683 or p4684.
The zero mark distance for zero mark monitoring is set in p0425 (rotary encoder).
Alarm value (r2124, interpret decimal):
accumulated differential pulses in encoder pulses.
See also: p0491 (Motor encoder fault response ENCODER)

Remedy: - check that the encoder cables are routed in compliance with EMC.
- check the plug connections
. check the encoder type (encoder with equidistant zero marks).
- adapt the parameter for the distance between zero marks (p0424, p0425).
- replace the encoder or encoder cable

Reaction upon F: Infeed: NONE (OFF1, OFF2)
Vector: NONE (ENCODER, IASC/DCBRAKE, OFF1, OFF2, OFF3, STOP1, STOP2)

Acknowl. upon F: IMMEDIATELY

Reaction upon N: NONE

Acknowl. upon N: NONE

A31429 (F, N) Encoder 1: Position difference, hall sensor/track C/D and A/B too large

Message value: %1

Drive object: B_INF, ENC, VECTOR_G

Reaction: NONE

Acknowledge: NONE

Cause: The error for track C/D is greater than +/-15 ° mechanical or +/-60 ° electrical or the error for the Hall signals is greater than +/-60 ° electrical.
One period of track C/D corresponds to 360 ° mechanical.
One period of the Hall signal corresponds to 360 ° electrical.
The monitoring responds if, for example, Hall sensors are connected as equivalent for the C/D tracks with the incorrect rotational sense or supply values that are not accurate enough.
Alarm value (r2124, interpret decimal):
For track C/D, the following applies:
Measured deviation as mechanical angle (16 bits with sign, 182 dec corresponds to 1 °).
For Hall signals, the following applies:
Measured deviation as electrical angle (16 bits with sign, 182 dec corresponds to 1 °).
See also: p0491 (Motor encoder fault response ENCODER)

Remedy: - track C or D not connected.
- correct the direction of rotation of the Hall sensor possibly connected as equivalent for track C/D.
- check that the encoder cables are routed in compliance with EMC.
- check the adjustment of the Hall sensor.

Reaction upon F: Infeed: NONE (OFF1, OFF2)
Vector: NONE (ENCODER, IASC/DCBRAKE, OFF1, OFF2, OFF3, STOP1, STOP2)

Acknowl. upon F: IMMEDIATELY

Reaction upon N: NONE

Acknowl. upon N: NONE

A31431 (F, N) Encoder 1: Deviation, position incremental/absolute too large

Message value: %1

Drive object: B_INF, ENC, VECTOR_G

Reaction: NONE

Acknowledge: NONE

Cause: When the zero pulse is passed, a deviation in the incremental position was detected.

© Siemens AG 2012 All Rights Reserved

For equidistant zero marks, the following applies:
- The first zero mark passed supplies the reference point for all subsequent checks. The other zero marks must have n times the distance referred to the first zero mark.
For distance-coded zero marks, the following applies:
- the first zero mark pair supplies the reference point for all subsequent checks. The other zero mark pairs must have the expected distance to the first zero mark pair.
Alarm value (r2124, interpret decimal):
Deviation in quadrants (1 pulse = 4 quadrants).
See also: p0491 (Motor encoder fault response ENCODER)

Remedy: - check that the encoder cables are routed in compliance with EMC.
- check the plug connections
- replace the encoder or encoder cable
- Clean coding disk or remove strong magnetic fields.

Reaction upon F: Infeed: NONE (OFF1, OFF2)
Vector: NONE (ENCODER, IASC/DCBRAKE, OFF1, OFF2, OFF3, STOP1, STOP2)

Acknowl. upon F: IMMEDIATELY

Reaction upon N: NONE

Acknowl. upon N: NONE

A31432 (F, N) Encoder 1: Rotor position adaptation corrects deviation

Message value: %1

Drive object: B_INF, ENC, VECTOR_G

Reaction: NONE

Acknowledge: NONE

Cause: For track A/B, pulses have been lost or too many have been counted. These pulses are presently being corrected.
Alarm value (r2124, interpret decimal):
Last measured deviation of zero mark in increments (4 increments = 1 encoder pulse).
The sign designates the direction of motion when detecting the zero mark distance.

Remedy: - check that the encoder cables are routed in compliance with EMC.
- check the plug connections
- replace the encoder or encoder cable
- check encoder limit frequency.
- adapt the parameter for the distance between zero marks (p0424, p0425).

Reaction upon F: Infeed: NONE (OFF1, OFF2)
Vector: NONE (ENCODER, IASC/DCBRAKE, OFF1, OFF2, OFF3, STOP1, STOP2)

Acknowl. upon F: IMMEDIATELY

Reaction upon N: NONE

Acknowl. upon N: NONE

A31442 (F, N) Encoder 1: Battery voltage pre-alarm

Message value: -

Drive object: B_INF, ENC, VECTOR_G

Reaction: NONE

Acknowledge: NONE

Cause: When switched-off, the encoder uses a battery to back up the multiturn information. The battery voltage is no longer sufficient to check the multiturn information.

Remedy: Replace battery.

Reaction upon F: Infeed: NONE (OFF1, OFF2)
Vector: NONE (ENCODER, IASC/DCBRAKE, OFF1, OFF2, OFF3, STOP1, STOP2)

Acknowl. upon F: IMMEDIATELY

Reaction upon N: NONE

Acknowl. upon N: NONE

© Siemens AG 2012 All Rights Reserved

A31443 (F, N) Encoder 1: Unipolar CD signal level outside specification

Message value: Fault cause: %1 bin

Drive object: B_INF, ENC, VECTOR_G

Reaction: NONE

Acknowledge: NONE

Cause: The unipolar level (CP/CN or DP/DN) for encoder 1 is outside the permissible tolerance.
Alarm value (r2124, interpret binary):
Bit 0 = 1: Either CP or CN outside the tolerance.
Bit 16 = 1: Either DP or DN outside the tolerance.
The unipolar nominal signal level of the encoder must lie in the range 2500 mV +/- 500 mV.
The response thresholds are < 1700 mV and > 3300 mV.
Note:
The signal level is not evaluated unless the following conditions are satisfied:
- Sensor Module properties available (r0459.31 = 1).
- Monitoring active (p0437.31 = 1).
See also: p0491 (Motor encoder fault response ENCODER)

Remedy: - check that the encoder cables and shielding are routed in compliance with EMC.
- check the plug connections and contacts of the encoder cable.
- are the C/D tracks connected correctly (have the signal lines CP and CN or DP and DN been interchanged)?
- replace the encoder cable.

Reaction upon F: Infeed: NONE
Vector: NONE (ENCODER, IASC/DCBRAKE, OFF1, OFF2, OFF3, STOP1, STOP2)

Acknowl. upon F: IMMEDIATELY

Reaction upon N: NONE

Acknowl. upon N: NONE

A31460 (N) Encoder 1: Analog sensor channel A failed

Message value: %1

Drive object: B_INF, ENC, VECTOR_G

Reaction: NONE

Acknowledge: NONE

Cause: The input voltage of the analog sensor is outside the permissible limits.
Alarm value (r2124, interpret decimal):
1: Input voltage outside detectable measuring range.
2: Input voltage outside measuring range set in p4673.
3: The absolute value of the input voltage has exceeded the range limit (p4676).

Remedy: Re alarm value = 1:
- check the output voltage of the analog sensor.
Re alarm value = 2:
- check the voltage setting for each encoder period (p4673).
Re alarm value = 3:
- check the range limit setting and increase it if necessary (p4676).

Reaction upon N: NONE

Acknowl. upon N: NONE

A31461 (N) Encoder 1: Analog sensor channel B failed

Message value: %1

Drive object: B_INF, ENC, VECTOR_G

Reaction: NONE

Acknowledge: NONE

Cause: The input voltage of the analog sensor is outside the permissible limits.
Alarm value (r2124, interpret decimal):
1: Input voltage outside detectable measuring range.
2: Input voltage outside the measuring range set in (p4675).
3: The absolute value of the input voltage has exceeded the range limit (p4676).

© Siemens AG 2012 All Rights Reserved

Remedy: Re alarm value = 1:
- check the output voltage of the analog sensor.
Re alarm value = 2:
- check the voltage setting for each encoder period (p4675).
Re alarm value = 3:
- check the range limit setting and increase it if necessary (p4676).

Reaction upon N: NONE
Acknowl. upon N: NONE

A31462 (N) Encoder 1: Analog sensor, no channel active

Message value: %1
Drive object: B_INF, ENC, VECTOR_G
Reaction: NONE
Acknowledge: NONE
Cause: Channel A and B are not activated for the analog sensor.
Remedy: - activate channel A and/or channel B (p4670).
- check the encoder configuration (p0404.17).
See also: p4670 (Analog sensor configuration)

Reaction upon N: NONE
Acknowl. upon N: NONE

A31463 (N) Encoder 1: Analog sensor position value exceeds limit value

Message value: %1
Drive object: B_INF, ENC, VECTOR_G
Reaction: NONE
Acknowledge: NONE
Cause: The position value has exceeded the permissible range of -0.5 ... +0.5.
Alarm value (r2124, interpret decimal):
1: Position value from the LVDT sensor.
2: Position value from the encoder characteristic.
Remedy: Re alarm value = 1:
- Check the LVDT ratio (p4678).
- check the reference signal connection at track B.
Re alarm value = 2:
- check the coefficients of the characteristic (p4663 ... p4666).

Reaction upon N: NONE
Acknowl. upon N: NONE

A31470 (F, N) Encoder 1: Soiling detected

Message value: -
Drive object: B_INF, ENC, VECTOR_G
Reaction: NONE
Acknowledge: NONE
Cause: In the case of the alternative encoder system interface on the Sensor Module Cabinet 30 (SMC30), encoder soiling is signaled via a 0 signal at terminal X521.7.
Remedy: - check the plug connections
- replace the encoder or encoder cable

Reaction upon F: Infeed: NONE (OFF1, OFF2)
Vector: NONE (ENCODER, IASC/DCBRAKE, OFF1, OFF2, OFF3, STOP1, STOP2)
Acknowl. upon F: IMMEDIATELY
Reaction upon N: NONE
Acknowl. upon N: NONE

© Siemens AG 2012 All Rights Reserved

F31500 (N, A) Encoder 1: Position tracking traversing range exceeded

Message value: -

Drive object: B_INF, ENC, VECTOR_G

Reaction: Infeed: OFF1 (NONE, OFF2)
Vector: OFF1 (NONE, OFF2, OFF3)

Acknowledge: IMMEDIATELY

Cause: For a configured linear axis without modulo correction, the drive/encoder has exceeded the maximum possible traversing range. The value should be read in p0412 and interpreted as the number of motor revolutions.
For p0411.0 = 1, the maximum traversing range for the configured linear axis is defined to be 64x (+/- 32x) of p0421.
For p0411.3 = 1, the maximum traversing range for the configured linear axis is pre-set (default value) to the highest possible value and is +/-p0412/2 (rounded off to complete revolutions). The highest possible value depends on the pulse number (p0408) and the fine resolution (p0419).

Remedy: The fault should be resolved as follows:
- select encoder commissioning (p0010 = 4).
- reset the position tracking as follows (p0411.2 = 1).
- de-select encoder commissioning (p0010 = 0).
The fault should then be acknowledged and the absolute encoder adjusted.

Reaction upon N: NONE

Acknowl. upon N: NONE

Reaction upon A: NONE

Acknowl. upon A: NONE

F31501 (N, A) Encoder 1: Position tracking encoder position outside tolerance window

Message value: %1

Drive object: B_INF, ENC, VECTOR_G

Reaction: Infeed: OFF1 (NONE, OFF2)
Vector: OFF1 (NONE, OFF2, OFF3)

Acknowledge: IMMEDIATELY

Cause: When powered down, the drive/encoder was moved through a distance greater than was parameterized in the tolerance window. It is possible that there is no longer any reference between the mechanical system and encoder.
Fault value (r0949, interpret decimal):
Deviation (difference) to the last encoder position in increments of the absolute value.
The sign designates the traversing direction.
Note:
The deviation (difference) found is also displayed in r0477.
See also: p0413 (Measuring gear, position tracking tolerance window), r0477 (Measuring gear, position difference)

Remedy: Reset the position tracking as follows:
- select encoder commissioning (p0010 = 4).
- reset the position tracking as follows (p0411.2 = 1).
- de-select encoder commissioning (p0010 = 0).
The fault should then be acknowledged and, if necessary, the absolute encoder adjusted (p2507).
See also: p0010

Reaction upon N: NONE

Acknowl. upon N: NONE

Reaction upon A: NONE

Acknowl. upon A: NONE

F31502 (N, A) Encoder 1: Encoder with measuring gear, without valid signals

Message value: -

Drive object: B_INF, ENC, VECTOR_G

Reaction: Infeed: OFF1 (OFF2)
Vector: OFF1 (OFF2, OFF3)

Acknowledge: IMMEDIATELY

Cause: The encoder with measuring gear no longer provides any valid signals.

Remedy: It must be ensured that all of the encoders, with mounted measuring gear, provide valid actual values in operation.

Reaction upon N: NONE

Acknowl. upon N: NONE

© Siemens AG 2012 All Rights Reserved

Reaction upon A: NONE
Acknowl. upon A: NONE

F31503 (N, A) Encoder 1: Position tracking cannot be reset

Message value: -
Drive object: B_INF, ENC, VECTOR_G
Reaction: Infeed: OFF1 (NONE, OFF2)
Vector: OFF1 (NONE, OFF2, OFF3)
Acknowledge: IMMEDIATELY
Cause: The position tracking for the measuring gear cannot be reset.
Remedy: The fault should be resolved as follows:
- select encoder commissioning (p0010 = 4).
- reset the position tracking as follows (p0411.2 = 1).
- de-select encoder commissioning (p0010 = 0).
The fault should then be acknowledged and the absolute encoder adjusted.

Reaction upon N: NONE
Acknowl. upon N: NONE
Reaction upon A: NONE
Acknowl. upon A: NONE

A31700 Encoder 1: Effectivity test does not supply the expected value

Message value: Fault cause: %1 bin
Drive object: B_INF, ENC, VECTOR_G
Reaction: NONE
Acknowledge: NONE
Cause: The DRIVE-CLiQ encoder fault word supplies fault bits that have been set.
Fault value (r0949, interpret binary):
Bit x = 1: Effectivity test x unsuccessful.
Remedy: Replace encoder.

N31800 (F) Encoder 1: Group signal

Message value: -
Drive object: B_INF, ENC, VECTOR_G
Reaction: Infeed: OFF2 (NONE)
Vector: ENCODER (IASC/DCBRAKE, NONE)
Acknowledge: NONE
Cause: The motor encoder has detected at least one fault.
See also: p0491 (Motor encoder fault response ENCODER)
Remedy: Evaluate the other messages that are presently available.

Reaction upon F: Infeed: OFF2 (NONE)
Vector: ENCODER (IASC/DCBRAKE, NONE)
Acknowl. upon F: IMMEDIATELY

F31801 (N, A) Encoder 1 DRIVE-CLiQ: Sign-of-life missing

Message value: Component number: %1, fault cause: %2
Drive object: B_INF, ENC, VECTOR_G
Reaction: Infeed: OFF2 (NONE)
Vector: ENCODER (IASC/DCBRAKE, NONE)
Acknowledge: IMMEDIATELY
Cause: A DRIVE-CLiQ communication error has occurred from the Control Unit to the encoder involved.
Fault cause:
10 (= 0A hex):
The sign-of-life bit in the receive telegram is not set.
Note regarding the message value:
The individual information is coded as follows in the message value (r0949/r2124):
0000yyxx hex: yy = component number, xx = error cause
See also: p0491 (Motor encoder fault response ENCODER)

© Siemens AG 2012 All Rights Reserved

Remedy: - check the electrical cabinet design and cable routing for EMC compliance
- replace the component involved.
See also: p9916 (DRIVE-CLiQ data transfer error shutdown threshold slave)

Reaction upon N: NONE
Acknowl. upon N: NONE
Reaction upon A: NONE
Acknowl. upon A: NONE

F31802 (N, A) Encoder 1: Time slice overflow

Message value: %1
Drive object: B_INF, ENC, VECTOR_G
Reaction: Infeed: OFF2 (NONE)
Vector: ENCODER (IASC/DCBRAKE, NONE)
Acknowledge: IMMEDIATELY
Cause: A time slice overflow has occurred in encoder 1.
Fault value (r0949, interpret hexadecimal):
yx hex: y = function involved (Siemens-internal fault diagnostics), x = time slice involved
x = 9:
Time slice overflow of the fast (current controller clock cycle) time slice.
x = A:
Time slice overflow of the average time slice.
x = C:
Time slice overflow of the slow time slice.
yx = 3E7:
Timeout when waiting for SYNO (e.g. unexpected return to non-cyclic operation).
See also: p0491 (Motor encoder fault response ENCODER)
Remedy: Increase the current controller sampling time
Note:
For a current controller sampling time = 31.25 µs, use an SMx20 with order number 6SL3055-0AA00-5xA3.

Reaction upon N: NONE
Acknowl. upon N: NONE
Reaction upon A: NONE
Acknowl. upon A: NONE

F31804 (N, A) Encoder 1: Checksum error

Message value: %1
Drive object: B_INF, ENC, VECTOR_G
Reaction: Infeed: OFF2 (NONE)
Vector: ENCODER (IASC/DCBRAKE, NONE)
Acknowledge: POWER ON (IMMEDIATELY)
Cause: A checksum error has occurred when reading-out the program memory on the Sensor Module.
Fault value (r0949, interpret hexadecimal):
yyyyxxxx hex
yyyy: Memory area involved.
xxxx: Difference between the checksum at POWER ON and the actual checksum.
See also: p0491 (Motor encoder fault response ENCODER)
Remedy: - carry out a POWER ON (power off/on).
- upgrade firmware to later version (>= V2.6 HF3, >= V4.3 SP2, >= V4.4).
- check whether the permissible ambient temperature for the component is maintained.
- replace the Sensor Module.

Reaction upon N: NONE
Acknowl. upon N: NONE
Reaction upon A: NONE
Acknowl. upon A: NONE

© Siemens AG 2012 All Rights Reserved

F31805 (N, A) Encoder 1: EPROM checksum error

Message value: %1
Drive object: B_INF, ENC, VECTOR_G
Reaction: Infeed: OFF2 (NONE)
Vector: ENCODER (IASC/DCBRAKE, NONE)
Acknowledge: IMMEDIATELY
Cause: Internal parameter data is corrupted.
Fault value (r0949, interpret hexadecimal):
01: EEPROM access error.
02: Too many blocks in the EEPROM.
See also: p0491 (Motor encoder fault response ENCODER)
Remedy: Replace the module.
Reaction upon N: NONE
Acknowl. upon N: NONE
Reaction upon A: NONE
Acknowl. upon A: NONE

F31806 (N, A) Encoder 1: Initialization error

Message value: %1
Drive object: B_INF, ENC, VECTOR_G
Reaction: Infeed: OFF2 (NONE)
Vector: ENCODER (IASC/DCBRAKE, NONE)
Acknowledge: PULSE INHIBIT
Cause: The encoder was not successfully initialized.
Fault value (r0949, interpret hexadecimal):
Bit 0, 1: Encoder initialization with the motor rotating has failed (deviation involving coarse and fine position in encoder pulses/4).
Bit 2: Mid-voltage matching for track A unsuccessful.
Bit 3: Mid-voltage matching for track B unsuccessful.
Bit 4: Mid-voltage matching for acceleration input unsuccessful.
Bit 5: Mid-voltage matching for track safety A unsuccessful.
Bit 6: Mid-voltage matching for track safety B unsuccessful.
Bit 7: Mid-voltage matching for track C unsuccessful.
Bit 8: Mid-voltage matching for track D unsuccessful.
Bit 9: Mid-voltage matching for track R unsuccessful.
Bit 10: The difference in mid-voltages between A and B is too great (> 0.5 V)
Bit 11: The difference in mid-voltages between C and D is too great (> 0.5 V)
Bit 12: The difference in mid-voltages between safety A and safety B is too great (> 0.5 V)
Bit 13: The difference in mid-voltages between A and safety B is too great (> 0.5 V)
Bit 14: The difference in mid-voltages between B and safety A is too great (> 0.5 V)
Bit 15: The standard deviation of the calculated mid-voltages is too great (> 0.3 V)
Bit 16: Internal fault - fault when reading a register (CAFE)
Bit 17: Internal fault - fault when writing a register (CAFE)
Bit 18: Internal fault: No mid-voltage matching available
Bit 19: Internal error - ADC access error.
Bit 20: Internal error - no zero crossover found.
Bit 28: Error while initializing the EnDat 2.2 measuring unit.
Bit 29: Error when reading out the data from the EnDat 2.2 measuring unit.
Bit 30: EEPROM checksum of the EnDat 2.2 measuring unit incorrect.
Bit 31: Data of the EnDat 2.2 measuring unit inconsistent.
Note:
Bit 0, 1: Up to 6SL3055-0AA00-5*A0
Bits 2 ... 20: 6SL3055-0AA00-5*A1 and higher
See also: p0491 (Motor encoder fault response ENCODER)

© Siemens AG 2012 All Rights Reserved

Remedy: Acknowledge fault.
If the fault cannot be acknowledged:
Bits 2 ... 9: Check encoder power supply.
Bits 2 ... 14: Check the corresponding cable.
Bit 15 with no other bits: Check track R, check settings in p0404.
Bit 28: Check the cable between the EnDat 2.2 converter and the measuring unit.
Bit 29 ... 31: Replace the defective measuring unit.

Reaction upon N: NONE
Acknowl. upon N: NONE
Reaction upon A: NONE
Acknowl. upon A: NONE

A31811 (F, N) Encoder 1: Encoder serial number changed

Message value: -
Drive object: B_INF, ENC, VECTOR_G
Reaction: NONE
Acknowledge: NONE
Cause: The serial number of the motor encoder of a synchronous motor has changed. The change was only checked for encoders with serial number (e.g. EnDat encoders) and build-in motors (e.g. p0300 = 401) or third-party motors (p0300 = 2).
Cause 1:
- The encoder was replaced.
Cause 2:
- A third-party, built-in or linear motor was re-commissioned.
Cause 3:
- The motor with integrated and adjusted encoder was replaced.
Cause 4:
- The firmware was updated to a version that checks the encoder serial number.
Note:
With closed-loop position control, the serial number is accepted when starting the adjustment (p2507 = 2).
When the encoder is adjusted (p2507 = 3), the serial number is checked for changes and if required, the adjustment is reset (p2507 = 1).
Proceed as follows to hide serial number monitoring:
- set the following serial numbers for the corresponding Encoder Data Set: p0441= FF, p0442 = 0, p0443 = 0, p0444 = 0, p0445 = 0.
- parameterize F07414 as message type N (p2118, p2119).
See also: p0491 (Motor encoder fault response ENCODER)

Remedy: Re causes 1, 2:
Carry out an automatic adjustment using the pole position identification routine. Acknowledge fault. Initiate the pole position identification routine with p1990 = 1. Then check that the pole position identification routine is correctly executed.
SERVO:
If a pole position identification technique is selected in p1980, and if p0301 does not contain a motor type with an encoder adjusted in the factory, then p1990 is automatically activated.
or
Set the adjustment via p0431. In this case, the new serial number is automatically accepted.
or
Mechanically adjust the encoder. Accept the new serial number with p0440 = 1.
Re causes 3, 4:
Accept the new serial number with p0440 = 1.

Reaction upon F: Infeed: OFF2 (NONE)
Vector: NONE (ENCODER, OFF2)
Acknowl. upon F: IMMEDIATELY
Reaction upon N: NONE
Acknowl. upon N: NONE

© Siemens AG 2012 All Rights Reserved

F31812 (N, A) Encoder 1: Requested cycle or RX-/TX timing not supported

Message value: %1
Drive object: B_INF, ENC, VECTOR_G
Reaction: OFF2
Acknowledge: IMMEDIATELY
Cause: A cycle requested from the Control Unit or RX/TX timing is not supported.
Fault value (r0949, interpret decimal):
0: Application cycle is not supported.
1: DRIVE-CLiQ cycle is not supported.
2: Distance between RX and TX instants in time too low.
3: TX instant in time too early.
Remedy: Carry out a POWER ON (power off/on) for all components.
Reaction upon N: NONE
Acknowl. upon N: NONE
Reaction upon A: NONE
Acknowl. upon A: NONE

F31813 Encoder 1: Hardware logic unit failed

Message value: Fault cause: %1 bin
Drive object: B_INF, ENC, VECTOR_G
Reaction: Infeed: NONE
Vector: ENCODER (IASC/DCBRAKE, NONE)
Acknowledge: PULSE INHIBIT
Cause: The DRIVE-CLiQ encoder fault word supplies fault bits that have been set.
Fault value (r0949, interpret binary):
Bit 0: ALU watchdog has responded.
Bit 1: ALU has detected a sign-of-life error.
Remedy: Replace encoder.

F31820 (N, A) Encoder 1 DRIVE-CLiQ: Telegram error

Message value: Component number: %1, fault cause: %2
Drive object: B_INF, ENC, VECTOR_G
Reaction: Infeed: OFF2
Vector: ENCODER (IASC/DCBRAKE, NONE)
Acknowledge: IMMEDIATELY
Cause: A DRIVE-CLiQ communication error has occurred from the Control Unit to the encoder concerned.
Fault cause:
1 (= 01 hex):
Checksum error (CRC error).
2 (= 02 hex):
Telegram is shorter than specified in the length byte or in the receive list.
3 (= 03 hex):
Telegram is longer than specified in the length byte or in the receive list.
4 (= 04 hex):
The length of the receive telegram does not match the receive list.
5 (= 05 hex):
The type of the receive telegram does not match the receive list.
6 (= 06 hex):
The address of the component in the telegram and in the receive list do not match.
7 (= 07 hex):
A SYNC telegram is expected - but the received telegram is not a SYNC telegram.
8 (= 08 hex):
No SYNC telegram is expected - but the received telegram is one.
9 (= 09 hex):
The error bit in the receive telegram is set.
16 (= 10 hex):
The receive telegram is too early.

© Siemens AG 2012 All Rights Reserved

Note regarding the message value:
The individual information is coded as follows in the message value (r0949/r2124):
0000yyxx hex: yy = component number, xx = error cause
See also: p0491 (Motor encoder fault response ENCODER)

Remedy: - carry out a POWER ON (power off/on).
- check the electrical cabinet design and cable routing for EMC compliance
- check the DRIVE-CLiQ wiring (interrupted cable, contacts, ...).
See also: p9916 (DRIVE-CLiQ data transfer error shutdown threshold slave)

Reaction upon N: NONE
Acknowl. upon N: NONE
Reaction upon A: NONE
Acknowl. upon A: NONE

F31835 (N, A) Encoder 1 DRIVE-CLiQ: Cyclic data transfer error

Message value: Component number: %1, fault cause: %2

Drive object: B_INF, ENC, VECTOR_G

Reaction: Infeed: OFF2
Vector: ENCODER (IASC/DCBRAKE, NONE)

Acknowledge: IMMEDIATELY

Cause: A DRIVE-CLiQ communication error has occurred from the Control Unit to the encoder concerned. The nodes do not send and receive in synchronism.
Fault cause:
33 (= 21 hex):
The cyclic telegram has not been received.
34 (= 22 hex):
Timeout in the telegram receive list.
64 (= 40 hex):
Timeout in the telegram send list.
Note regarding the message value:
The individual information is coded as follows in the message value (r0949/r2124):
0000yyxx hex: yy = component number, xx = error cause
See also: p0491 (Motor encoder fault response ENCODER)

Remedy: - carry out a POWER ON.
- replace the component involved.
See also: p9916 (DRIVE-CLiQ data transfer error shutdown threshold slave)

Reaction upon N: NONE
Acknowl. upon N: NONE
Reaction upon A: NONE
Acknowl. upon A: NONE

F31836 (N, A) Encoder 1 DRIVE-CLiQ: Send error for DRIVE-CLiQ data

Message value: Component number: %1, fault cause: %2

Drive object: B_INF, ENC, VECTOR_G

Reaction: Infeed: OFF2
Vector: ENCODER (IASC/DCBRAKE, NONE)

Acknowledge: IMMEDIATELY

Cause: A DRIVE-CLiQ communication error has occurred from the Control Unit to the encoder involved. Data were not able to be sent.
Fault cause:
65 (= 41 hex):
Telegram type does not match send list.
Note regarding the message value:
The individual information is coded as follows in the message value (r0949/r2124):
0000yyxx hex: yy = component number, xx = error cause
See also: p0491 (Motor encoder fault response ENCODER)

Remedy: Carry out a POWER ON.

Reaction upon N: NONE
Acknowl. upon N: NONE

© Siemens AG 2012 All Rights Reserved

Reaction upon A: NONE
Acknowl. upon A: NONE

F31837 (N, A) Encoder 1 DRIVE-CLiQ: Component fault

Message value: Component number: %1, fault cause: %2

Drive object: B_INF, ENC, VECTOR_G

Reaction: Infeed: OFF2
Vector: ENCODER (IASC/DCBRAKE, NONE)

Acknowledge: IMMEDIATELY

Cause: Fault detected on the DRIVE-CLiQ component concerned. Faulty hardware cannot be excluded.
Fault cause:
32 (= 20 hex):
Error in the telegram header.
35 (= 23 hex):
Receive error: The telegram buffer memory contains an error.
66 (= 42 hex):
Send error: The telegram buffer memory contains an error.
67 (= 43 hex):
Send error: The telegram buffer memory contains an error.
Note regarding the message value:
The individual information is coded as follows in the message value (r0949/r2124):
0000yyxx hex: yy = component number, xx = error cause
See also: p0491 (Motor encoder fault response ENCODER)

Remedy: - check the DRIVE-CLiQ wiring (interrupted cable, contacts, ...).
- check the electrical cabinet design and cable routing for EMC compliance
- if required, use another DRIVE-CLiQ socket (p9904).
- replace the component involved.

Reaction upon N: NONE
Acknowl. upon N: NONE
Reaction upon A: NONE
Acknowl. upon A: NONE

F31845 (N, A) Encoder 1 DRIVE-CLiQ: Cyclic data transfer error

Message value: Component number: %1, fault cause: %2

Drive object: B_INF, ENC, VECTOR_G

Reaction: Infeed: OFF2
Vector: ENCODER (IASC/DCBRAKE, NONE)

Acknowledge: IMMEDIATELY

Cause: A DRIVE-CLiQ communication error has occurred from the Control Unit to the encoder involved.
Fault cause:
11 (= 0B hex):
Synchronization error during alternating cyclic data transfer.
Note regarding the message value:
The individual information is coded as follows in the message value (r0949/r2124):
0000yyxx hex: yy = component number, xx = error cause
See also: p0491 (Motor encoder fault response ENCODER)

Remedy: Carry out a POWER ON.
See also: p9916 (DRIVE-CLiQ data transfer error shutdown threshold slave)

Reaction upon N: NONE
Acknowl. upon N: NONE
Reaction upon A: NONE
Acknowl. upon A: NONE

© Siemens AG 2012 All Rights Reserved

F31850 (N, A) Encoder 1: Encoder evaluation, internal software error

Message value: %1

Drive object: B_INF, ENC, VECTOR_G

Reaction: Infeed: OFF2 (NONE)
Vector: ENCODER (IASC/DCBRAKE, NONE)

Acknowledge: POWER ON

Cause: An internal software error has occurred in the Sensor Module of encoder 1.
Fault value (r0949, interpret decimal):
1: Background time slice is blocked.
2: Checksum over the code memory is not OK.
10000: OEM memory of the EnDat encoder contains data that cannot be interpreted.
11000 ... 11499: Descriptive data from EEPROM incorrect.
11500 ... 11899: Calibration data from EEPROM incorrect.
11900 ... 11999: Configuration data from EEPROM incorrect.
12000 ... 12008: Communication with AD converter faulted.
16000: DRIVE-CLiQ encoder initialization application error.
16001: DRIVE-CLiQ encoder initialization ALU error.
16002: DRIVE-CLiQ encoder HISI / SISI initialization error.
16003: DRIVE-CLiQ encoder safety initialization error.
16004: DRIVE-CLiQ encoder internal system error.
See also: p0491 (Motor encoder fault response ENCODER)

Remedy: - replace the Sensor Module.
- if required, upgrade the firmware in the Sensor Module.
- contact the Hotline.

Reaction upon N: NONE

Acknowl. upon N: NONE

Reaction upon A: NONE

Acknowl. upon A: NONE

F31851 (N, A) Encoder 1 DRIVE-CLiQ (CU): Sign-of-life missing

Message value: Component number: %1, fault cause: %2

Drive object: B_INF, ENC, VECTOR_G

Reaction: Infeed: NONE (OFF1, OFF2)
Vector: ENCODER (IASC/DCBRAKE, NONE)

Acknowledge: IMMEDIATELY

Cause: A DRIVE-CLiQ communication error has occurred from the Sensor Module (encoder 1) involved to the Control Unit.
The DRIVE-CLiQ component did not set the sign-of-life to the Control Unit.
Fault cause:
10 (= 0A hex):
The sign-of-life bit in the receive telegram is not set.
Note regarding the message value:
The individual information is coded as follows in the message value (r0949/r2124):
0000yyxx hex: yy = component number, xx = error cause

Remedy: Upgrade the firmware of the component involved.

Reaction upon N: NONE

Acknowl. upon N: NONE

Reaction upon A: NONE

Acknowl. upon A: NONE

F31860 (N, A) Encoder 1 DRIVE-CLiQ (CU): Telegram error

Message value: Component number: %1, fault cause: %2

Drive object: B_INF, ENC, VECTOR_G

Reaction: Infeed: NONE (OFF1, OFF2)
Vector: ENCODER (IASC/DCBRAKE, NONE)

Acknowledge: IMMEDIATELY

Cause: A DRIVE-CLiQ communication error has occurred from the Sensor Module (encoder 1) involved to the Control Unit.

© Siemens AG 2012 All Rights Reserved

Fault cause:
1 (= 01 hex):
Checksum error (CRC error).
2 (= 02 hex):
Telegram is shorter than specified in the length byte or in the receive list.
3 (= 03 hex):
Telegram is longer than specified in the length byte or in the receive list.
4 (= 04 hex):
The length of the receive telegram does not match the receive list.
5 (= 05 hex):
The type of the receive telegram does not match the receive list.
6 (= 06 hex):
The address of the power unit in the telegram and in the receive list do not match.
9 (= 09 hex):
The error bit in the receive telegram is set.
16 (= 10 hex):
The receive telegram is too early.
17 (= 11 hex):
CRC error and the receive telegram is too early.
18 (= 12 hex):
The telegram is shorter than that specified in the length byte or in the receive list and the receive telegram is too early.
19 (= 13 hex):
The telegram is longer than that specified in the length byte or in the receive list and the receive telegram is too early.
20 (= 14 hex):
The length of the receive telegram does not match the receive list and the receive telegram is too early.
21 (= 15 hex):
The type of the receive telegram does not match the receive list and the receive telegram is too early.
22 (= 16 hex):
The address of the power unit in the telegram and in the receive list does not match and the receive telegram is too early.
25 (= 19 hex):
The error bit in the receive telegram is set and the receive telegram is too early.
Note regarding the message value:
The individual information is coded as follows in the message value (r0949/r2124):
0000yyxx hex: yy = component number, xx = error cause

Remedy: - carry out a POWER ON (power off/on).
- check the electrical cabinet design and cable routing for EMC compliance
- check the DRIVE-CLiQ wiring (interrupted cable, contacts, ...).
See also: p9915 (DRIVE-CLiQ data transfer error shutdown threshold master)

Reaction upon N: NONE
Acknowl. upon N: NONE
Reaction upon A: NONE
Acknowl. upon A: NONE

F31875 (N, A) Encoder 1 DRIVE-CLiQ (CU): Supply voltage failed

Message value: Component number: %1, fault cause: %2

Drive object: B_INF, ENC, VECTOR_G

Reaction: Infeed: OFF2
Vector: ENCODER (IASC/DCBRAKE, NONE)

Acknowledge: IMMEDIATELY

Cause: The DRIVE-CLiQ communication from the DRIVE-CLiQ component involved to the Control Unit signals that the supply voltage has failed.
Fault cause:
9 (= 09 hex):
The power supply voltage for the components has failed.
Note regarding the message value:
The individual information is coded as follows in the message value (r0949/r2124):
0000yyxx hex: yy = component number, xx = error cause

Remedy: - carry out a POWER ON (power off/on).
- check the power supply voltage wiring for the DRIVE-CLiQ component (interrupted cable, contacts, ...).
- check the dimensioning of the power supply for the DRIVE-CLiQ component.

© Siemens AG 2012 All Rights Reserved

Reaction upon N: NONE
Acknowl. upon N: NONE
Reaction upon A: NONE
Acknowl. upon A: NONE

F31885 (N, A) Encoder 1 DRIVE-CLiQ (CU): Cyclic data transfer error

Message value: Component number: %1, fault cause: %2

Drive object: B_INF, ENC, VECTOR_G

Reaction: Infeed: NONE (OFF1, OFF2)
Vector: ENCODER (IASC/DCBRAKE, NONE)

Acknowledge: IMMEDIATELY

Cause: A DRIVE-CLiQ communication error has occurred from the Sensor Module (encoder 1) involved to the Control Unit.
The nodes do not send and receive in synchronism.
Fault cause:
26 (= 1A hex):
Sign-of-life bit in the receive telegram not set and the receive telegram is too early.
33 (= 21 hex):
The cyclic telegram has not been received.
34 (= 22 hex):
Timeout in the telegram receive list.
64 (= 40 hex):
Timeout in the telegram send list.
98 (= 62 hex):
Error at the transition to cyclic operation.
Note regarding the message value:
The individual information is coded as follows in the message value (r0949/r2124):
0000yyxx hex: yy = component number, xx = error cause

Remedy: - check the power supply voltage of the component involved.
- carry out a POWER ON.
- replace the component involved.
See also: p9915 (DRIVE-CLiQ data transfer error shutdown threshold master)

Reaction upon N: NONE
Acknowl. upon N: NONE
Reaction upon A: NONE
Acknowl. upon A: NONE

F31886 (N, A) Encoder 1 DRIVE-CLiQ (CU): Error when sending DRIVE-CLiQ data

Message value: Component number: %1, fault cause: %2

Drive object: B_INF, ENC, VECTOR_G

Reaction: Infeed: NONE (OFF1, OFF2)
Vector: ENCODER (IASC/DCBRAKE, NONE)

Acknowledge: IMMEDIATELY

Cause: A DRIVE-CLiQ communication error has occurred from the Sensor Module (encoder 1) involved to the Control Unit.
Data were not able to be sent.
Fault cause:
65 (= 41 hex):
Telegram type does not match send list.
Note regarding the message value:
The individual information is coded as follows in the message value (r0949/r2124):
0000yyxx hex: yy = component number, xx = error cause

Remedy: - carry out a POWER ON.
- check whether the firmware version of the encoder (r0148) matches the firmware version of Control Unit (r0018).

Reaction upon N: NONE
Acknowl. upon N: NONE
Reaction upon A: NONE
Acknowl. upon A: NONE

© Siemens AG 2012 All Rights Reserved

F31887 (N, A) Encoder 1 DRIVE-CLiQ (CU): Component fault

Message value: Component number: %1, fault cause: %2

Drive object: B_INF, ENC, VECTOR_G

Reaction: Infeed: NONE (OFF1, OFF2)
Vector: ENCODER (IASC/DCBRAKE, NONE)

Acknowledge: IMMEDIATELY

Cause: Fault detected on the DRIVE-CLiQ component involved (Sensor Module for encoder 1). Faulty hardware cannot be excluded.
Fault cause:
32 (= 20 hex):
Error in the telegram header.
35 (= 23 hex):
Receive error: The telegram buffer memory contains an error.
66 (= 42 hex):
Send error: The telegram buffer memory contains an error.
67 (= 43 hex):
Send error: The telegram buffer memory contains an error.
96 (= 60 hex):
Response received too late during runtime measurement.
97 (= 61 hex):
Time taken to exchange characteristic data too long.
Note regarding the message value:
The individual information is coded as follows in the message value (r0949/r2124):
0000yyxx hex: yy = component number, xx = error cause

Remedy: - check the DRIVE-CLiQ wiring (interrupted cable, contacts, ...).
- check the electrical cabinet design and cable routing for EMC compliance
- if required, use another DRIVE-CLiQ socket (p9904).
- replace the component involved.

Reaction upon N: NONE

Acknowl. upon N: NONE

Reaction upon A: NONE

Acknowl. upon A: NONE

F31895 (N, A) Encoder 1 DRIVE-CLiQ (CU): Alternating cyclic data transfer error

Message value: Component number: %1, fault cause: %2

Drive object: B_INF, ENC, VECTOR_G

Reaction: Infeed: NONE (OFF1, OFF2)
Vector: ENCODER (IASC/DCBRAKE, NONE)

Acknowledge: IMMEDIATELY

Cause: A DRIVE-CLiQ communication error has occurred from the Sensor Module (encoder 1) involved to the Control Unit.
Fault cause:
11 (= 0B hex):
Synchronization error during alternating cyclic data transfer.
Note regarding the message value:
The individual information is coded as follows in the message value (r0949/r2124):
0000yyxx hex: yy = component number, xx = error cause

Remedy: Carry out a POWER ON.
See also: p9915 (DRIVE-CLiQ data transfer error shutdown threshold master)

Reaction upon N: NONE

Acknowl. upon N: NONE

Reaction upon A: NONE

Acknowl. upon A: NONE

© Siemens AG 2012 All Rights Reserved

F31896 (N, A) Encoder 1 DRIVE-CLiQ (CU): Inconsistent component properties

Message value: Component number: %1

Drive object: B_INF, ENC, VECTOR_G

Reaction: Infeed: NONE (OFF1, OFF2)
Vector: OFF2 (ENCODER, IASC/DCBRAKE, NONE, OFF1, OFF3, STOP1, STOP2)

Acknowledge: IMMEDIATELY

Cause: The properties of the DRIVE-CLiQ component (Sensor Module for encoder 1), specified by the fault value, have changed in an incompatible fashion with respect to the properties when booted. One cause can be, e.g. that a DRIVE-CLiQ cable or DRIVE-CLiQ component has been replaced.
Fault value (r0949, interpret decimal):
Component number.

Remedy: - carry out a POWER ON.
- when a component is replaced, the same component type and if possible the same firmware version should be used.
- when a cable is replaced, only cables whose length is the same as or as close as possible to the length of the original cables should be used (ensure compliance with the maximum cable length).

Reaction upon N: NONE

Acknowl. upon N: NONE

Reaction upon A: NONE

Acknowl. upon A: NONE

F31899 (N, A) Encoder 1: Unknown fault

Message value: New message: %1

Drive object: B_INF, ENC, VECTOR_G

Reaction: Infeed: OFF2 (NONE, OFF1)
Vector: ENCODER (IASC/DCBRAKE, NONE, OFF1, OFF2, OFF3, STOP1, STOP2)

Acknowledge: IMMEDIATELY (POWER ON)

Cause: A fault occurred on the Sensor Module for encoder 1 that cannot be interpreted by the Control Unit firmware.
This can occur if the firmware on this component is more recent than the firmware on the Control Unit.
Fault value (r0949, interpret decimal):
Fault number.
Note:
If required, the significance of this new fault can be read about in a more recent description of the Control Unit.
See also: p0491 (Motor encoder fault response ENCODER)

Remedy: - replace the firmware on the Sensor Module by an older firmware version (r0148).
- upgrade the firmware on the Control Unit (r0018).

Reaction upon N: NONE

Acknowl. upon N: NONE

Reaction upon A: NONE

Acknowl. upon A: NONE

A31902 (F, N) Encoder 1: SPI-BUS error occurred

Message value: %1

Drive object: B_INF, ENC, VECTOR_G

Reaction: NONE

Acknowledge: NONE

Cause: Error when operating the internal SPI bus.
Fault value (r0949, interpret hexadecimal):
Only for internal Siemens troubleshooting.

Remedy: - replace the Sensor Module.
- if required, upgrade the firmware in the Sensor Module.
- contact the Hotline.

Reaction upon F: Infeed: NONE (OFF1, OFF2)
Vector: NONE (ENCODER, IASC/DCBRAKE, OFF1, OFF2, OFF3, STOP1, STOP2)

Acknowl. upon F: IMMEDIATELY

Reaction upon N: NONE

Acknowl. upon N: NONE

© Siemens AG 2012 All Rights Reserved

A31903 (F, N) Encoder 1: I2C-BUS error occurred

Message value: %1

Drive object: B_INF, ENC, VECTOR_G

Reaction: NONE

Acknowledge: NONE

Cause: Error when operating the internal I2C bus.
Fault value (r0949, interpret hexadecimal):
Only for internal Siemens troubleshooting.

Remedy: - replace the Sensor Module.
- if required, upgrade the firmware in the Sensor Module.
- contact the Hotline.

Reaction upon F: Infeed: NONE (OFF1, OFF2)
Vector: NONE (ENCODER, IASC/DCBRAKE, OFF1, OFF2, OFF3, STOP1, STOP2)

Acknowl. upon F: IMMEDIATELY

Reaction upon N: NONE

Acknowl. upon N: NONE

F31905 (N, A) Encoder 1: Parameterization error

Message value: Parameter: %1, supplementary information: %2

Drive object: B_INF, ENC, VECTOR_G

Reaction: Infeed: OFF2 (NONE, OFF1)
Vector: ENCODER (IASC/DCBRAKE, NONE, OFF1, OFF2, OFF3, STOP1, STOP2)

Acknowledge: IMMEDIATELY

Cause: A parameter of encoder 1 was detected as being incorrect.
It is possible that the parameterized encoder type does not match the connected encoder.
The parameter involved can be determined as follows:
- determine the parameter number using the fault value (r0949).
- determine the parameter index (p0187).
Fault value (r0949, interpret decimal):
yyyyxxxx dec: yyyy = supplementary information, xxxx = parameter
xxxx = 421:
For an EnDat/SSI encoder, the absolute position in the protocol must be less than or equal to 30 bits.
yyyy = 0:
No information available.
yyyy = 1:
The component does not support HTL level (p0405.1 = 0) combined with track monitoring A/B <> -A/B (p0405.2 = 1).
yyyy = 2:
A code number for an identified encoder has been entered into p0400, however, no identification was carried out.
Please start a new encoder identification.
yyyy = 3:
A code number for an identified encoder has been entered into p0400, however, no identification was carried out.
Please select a listed encoder in p0400 with a code number < 10000.
yyyy = 4:
This component does not support SSI encoders (p0404.9 = 1) without track A/B.
yyyy = 5:
For SQW encoder, value in p4686 greater than in p0425.
yyyy = 6:
DRIVE-CLiQ encoder cannot be used with this firmware version.
yyyy = 7:
For an SQW encoder, the Xact1 correction (p0437.2) is only permitted with equidistant zero marks.
yyyy = 8:
The motor pole pair width is not supported by the linear scale being used.
yyyy = 9:
The length of the position in the EnDat protocol may be a maximum of 32 bits.
yyyy = 10:
The connected encoder is not supported.
See also: p0491 (Motor encoder fault response ENCODER)

© Siemens AG 2012 All Rights Reserved

Remedy: - check whether the connected encoder type matches the encoder that has been parameterized.
- correct the parameter specified by the fault value (r0949) and p0187.
- re parameter number = 314:
- check the pole pair number and measuring gear ratio. The quotient of the "pole pair number" divided by the "measuring gear ratio" must be less than or equal to 1000 ((r0313 * p0433) / p0432 <= 1000).

Reaction upon N: NONE
Acknowl. upon N: NONE
Reaction upon A: NONE
Acknowl. upon A: NONE

F31912 Encoder 1: Device combination is not permissible

Message value: %1
Drive object: B_INF, ENC, VECTOR_G
Reaction: Infeed: ENCODER (NONE)
Vector: ENCODER (IASC/DCBRAKE, NONE)
Acknowledge: PULSE INHIBIT
Cause: The selected device combination is not supported.
Fault value (r0949, interpret decimal):
1003:
The connected measuring unit cannot be operated with the EnDat 2.2 converter. For instance, the measuring unit has a pulse number/resolution of 2^n.
1005:
The type of measuring unit (incremental) is not supported by the EnDat 2.2 converter.
1006:
The maximum duration (31.25 µs) of the EnDat transfer was exceeded.
2001:
The set combination of current controller cycle, DP cycle and Safety cycle is not supported by the EnDat 2.2 converter.
2002:
The resolution of the linear measuring unit does not match the pole pair width of the linear motor
Remedy: Re fault value = 1003, 1005, 1006:
- Use a measuring unit that is permissible.
For fault value = 2001:
- Set a permissible cycle combination (if required, use standard settings).
For fault value = 2002:
- Use a measuring unit with a lower resolution (p0422).

A31915 (F, N) Encoder 1: Configuration error

Message value: %1
Drive object: B_INF, ENC, VECTOR_G
Reaction: NONE
Acknowledge: NONE
Cause: The configuration for encoder 1 is incorrect.
Alarm value (r2124, interpret decimal):
1:
Re-parameterization between fault/alarm is not permissible.
419:
When the fine resolution Gx_XIST2 is configured, the encoder identifies a maximum possible absolute position actual value (r0483) that can no longer be represented within 32 bits.
Remedy: Re alarm value = 1:
No re-parameterization between fault/alarm.
Re alarm value = 419:
Reduce the fine resolution (p0419) or deactivate the monitoring (p0437.25), if the complete multiturn range is not required.

Reaction upon F: Infeed: NONE (OFF1, OFF2)
Vector: NONE (ENCODER, IASC/DCBRAKE)
Acknowl. upon F: IMMEDIATELY
Reaction upon N: NONE
Acknowl. upon N: NONE

© Siemens AG 2012 All Rights Reserved

F31916 (N, A) Encoder 1: Parameterization fault

Message value: Parameter: %1, supplementary information: %2

Drive object: B_INF, VECTOR_G

Reaction: Infeed: OFF2 (NONE, OFF1)
Vector: ENCODER (IASC/DCBRAKE, NONE, OFF1, OFF2, OFF3, STOP1, STOP2)

Acknowledge: IMMEDIATELY

Cause: A parameter of encoder 1 was detected as being incorrect.
It is possible that the parameterized encoder type does not match the connected encoder.
The parameter involved can be determined as follows:
- determine the parameter number using the fault value (r0949).
- determine the parameter index (p0187).
Fault value (r0949, interpret decimal):
Parameter number.
Note:
This fault is only output for encoders where r0404.10 = 1 or r0404.11 = 1. It corresponds to A31905 with encoders where r0404.10 = 0 and r0404.11 = 0.
See also: p0491 (Motor encoder fault response ENCODER)

Remedy: - check whether the connected encoder type matches the encoder that has been parameterized.
- correct the parameter specified by the fault value (r0949) and p0187.

Reaction upon N: NONE

Acknowl. upon N: NONE

Reaction upon A: NONE

Acknowl. upon A: NONE

F31916 (N, A) Encoder 1: Parameterization fault

Message value: Parameter: %1, supplementary information: %2

Drive object: ENC

Reaction: Infeed: OFF2 (NONE, OFF1)
Vector: ENCODER (IASC/DCBRAKE, NONE, OFF1, OFF2, OFF3, STOP1, STOP2)

Acknowledge: IMMEDIATELY

Cause: A parameter of encoder 1 was detected as being incorrect.
In the case of the ENCODER drive object, the selected encoder type (rotary/linear) might not match the function module setting (r0108.12).
The parameter involved can be determined as follows:
- determine the parameter number using the fault value (r0949).
- determine the parameter index (p0187).
Fault value (r0949, interpret decimal):
Parameter number.
See also: p0491 (Motor encoder fault response ENCODER)

Remedy: - check whether the connected encoder type matches the encoder that has been parameterized.
- correct the parameter specified by the fault value (r0949) and p0187.
- if a linear encoder has been selected in parameter p0400/p0404, the "linear encoder" function module has to be activated (r0108.12 = 1)
- if a rotary encoder has been selected in parameter p0400/p0404, the "linear encoder" function module should not be activated (r0108.12 = 0)

Reaction upon N: NONE

Acknowl. upon N: NONE

Reaction upon A: NONE

Acknowl. upon A: NONE

A31920 (F, N) Encoder 1: Temperature sensor fault

Message value: Fault cause: %1, channel number: %2

Drive object: B_INF, ENC, VECTOR_G

Reaction: NONE

Acknowledge: NONE

Cause: When evaluating the temperature sensor, an error occurred.

© Siemens AG 2012 All Rights Reserved

Fault cause:
1 (= 01 hex):
Wire breakage or sensor not connected (KTY: R > 1630 Ohm).
2 (= 02 hex):
Measured resistance too low (PTC: R < 20 Ohm, KTY: R < 50 Ohm).
Additional values:
Only for internal Siemens troubleshooting.
Note regarding the message value:
The individual information is coded as follows in the message value (r0949/r2124):
0000yyxx hex: yy = channel number, xx = error cause
See also: p0491 (Motor encoder fault response ENCODER)

Remedy: - check that the encoder cable is the correct type and is correctly connected.
- check the temperature sensor selection in p0600 to p0603.
- replace the Sensor Module (hardware defect or incorrect calibration data).

Reaction upon F: Infeed: NONE (OFF1, OFF2)
Vector: NONE (ENCODER, IASC/DCBRAKE, OFF1, OFF2, OFF3, STOP1, STOP2)

Acknowl. upon F: IMMEDIATELY

Reaction upon N: NONE

Acknowl. upon N: NONE

A31930 (N) Encoder 1: Data logger has saved data

Message value: -

Drive object: B_INF, ENC, VECTOR_G

Reaction: NONE

Acknowledge: NONE

Cause: For the activated function "Data logger" (p0437.0 = 1) a fault has occurred with the Sensor Module. This alarm indicates that the diagnostics data corresponding to the fault was saved on the memory card.
The diagnostics data is saved in the following folder:
/USER/SINAMICS/DATA/SMTRC00.BIN
...
/USER/SINAMICS/DATA/SMTRC07.BIN
/USER/SINAMICS/DATA/SMTRCIDX.TXT
The following information is contained in the TXT file:
- Display of the last written BIN file.
- Number of write operations that are still possible (from 10000 downwards).
Note:
Only Siemens can evaluate the BIN files.

Remedy: Not necessary.
The alarm disappears automatically.
The data logger is ready to record the next fault case.

Reaction upon N: NONE

Acknowl. upon N: NONE

A31940 (F, N) Encoder 1: Spindle sensor S1 voltage incorrect

Message value: %1

Drive object: B_INF, ENC, VECTOR_G

Reaction: NONE

Acknowledge: NONE

Cause: The voltage of analog sensor S1 is outside the permissible range.
Fault value (r0949, interpret decimal):
Signal level from sensor S1.
Note:
A signal level of 500 mV corresponds to the numerical value 500 dec.

Remedy: - Check the clamped tool.
- Check the tolerance and if required, adapt (p5040).
- Check the thresholds and if required, adapt (p5041).
- Check analog sensor S1 and connections.

© Siemens AG 2012 All Rights Reserved

Reaction upon F: Infeed: NONE (OFF1, OFF2)
Vector: NONE (ENCODER, IASC/DCBRAKE, OFF1, OFF2, OFF3, STOP1, STOP2)
Acknowl. upon F: IMMEDIATELY
Reaction upon N: NONE
Acknowl. upon N: NONE

F31950 Encoder 1: Internal software error

Message value: %1
Drive object: B_INF, ENC, VECTOR_G
Reaction: ENCODER (OFF2)
Acknowledge: POWER ON
Cause: An internal software error has occurred.
Fault value (r0949, interpret decimal):
The fault value contains information regarding the fault source.
Only for internal Siemens troubleshooting.
Remedy: - If necessary, upgrade the firmware in the Sensor Module to a later version.
- contact the Hotline.

A31999 (F, N) Encoder 1: Unknown alarm

Message value: New message: %1
Drive object: B_INF, ENC, VECTOR_G
Reaction: NONE
Acknowledge: NONE
Cause: A alarm has occurred on the Sensor Module for encoder 1 that cannot be interpreted by the Control Unit firmware.
This can occur if the firmware on this component is more recent than the firmware on the Control Unit.
Alarm value (r2124, interpret decimal):
Alarm number.
Note:
If required, the significance of this new alarm can be read about in a more recent description of the Control Unit.
See also: p0491 (Motor encoder fault response ENCODER)
Remedy: - replace the firmware on the Sensor Module by an older firmware version (r0148).
- upgrade the firmware on the Control Unit (r0018).
Reaction upon F: Infeed: NONE (OFF1, OFF2)
Vector: NONE (ENCODER, IASC/DCBRAKE, OFF1, OFF2, OFF3, STOP1, STOP2)
Acknowl. upon F: IMMEDIATELY (POWER ON)
Reaction upon N: NONE
Acknowl. upon N: NONE

F32100 (N, A) Encoder 2: Zero mark distance error

Message value: %1
Drive object: VECTOR_G
Reaction: OFF1 (IASC/DCBRAKE, NONE, OFF2, OFF3, STOP1, STOP2)
Acknowledge: PULSE INHIBIT
Cause: The measured zero mark distance does not correspond to the parameterized zero mark distance.
For distance-coded encoders, the zero mark distance is determined from zero marks detected pairs. This means that if a zero mark is missing, depending on the pair generation, this cannot result in a fault and also has no effect in the system.
The zero mark distance for the zero mark monitoring is set in p0425 (rotary encoder) or p0424 (linear encoder).
Fault value (r0949, interpret decimal):
Last measured zero mark distance in increments (4 increments = 1 encoder pulse).
The sign designates the direction of motion when detecting the zero mark distance.
Remedy: - check that the encoder cables are routed in compliance with EMC.
- check the plug connections
. check the encoder type (encoder with equidistant zero marks).
- adapt the parameter for the distance between zero marks (p0424, p0425).
- if message output above speed threshold, reduce filter time if necessary (p0438).
- replace the encoder or encoder cable

© Siemens AG 2012 All Rights Reserved

Reaction upon N: NONE
Acknowl. upon N: NONE
Reaction upon A: NONE
Acknowl. upon A: NONE

F32101 (N, A) Encoder 2: Zero mark failed

Message value: %1
Drive object: VECTOR_G
Reaction: OFF1 (IASC/DCBRAKE, NONE, OFF2, OFF3, STOP1, STOP2)
Acknowledge: PULSE INHIBIT
Cause: The 1.5 x parameterized zero mark distance was exceeded.
The zero mark distance for the zero mark monitoring is set in p0425 (rotary encoder) or p0424 (linear encoder).
Fault value (r0949, interpret decimal):
Number of increments after POWER ON or since the last zero mark that was detected (4 increments = 1 encoder pulse).
Remedy: - check that the encoder cables are routed in compliance with EMC.
- check the plug connections
. check the encoder type (encoder with equidistant zero marks).
- adapt the parameter for the clearance between zero marks (p0425).
- if message output above speed threshold, reduce filter time if necessary (p0438).
- when p0437.1 is active, check p4686.
- replace the encoder or encoder cable
Reaction upon N: NONE
Acknowl. upon N: NONE
Reaction upon A: NONE
Acknowl. upon A: NONE

F32103 (N, A) Encoder 2: Amplitude error, track R

Message value: R track: %1
Drive object: VECTOR_G
Reaction: OFF1 (IASC/DCBRAKE, NONE, OFF2, OFF3)
Acknowledge: IMMEDIATELY
Cause: The amplitude of the reference track signal (track R) does not lie within the tolerance bandwidth for encoder 2.
The fault can be initiated when the unipolar voltage level is exceeded (RP/RN) or if the differential amplitude is undershot.
Fault value (r0949, interpret hexadecimal):
yyyyxxxx hex: yyyy = 0, xxxx = Signal level, track R (16 bits with sign)
The response thresholds of the unipolar signal levels of the encoder are between < 1400 mV and > 3500 mV.
The response threshold for the differential signal level of the encoder is < -1600 mV.
A signal level of 500 mV peak value corresponds to the numerical value 5333 hex = 21299 dec.
Note:
The analog value of the amplitude error is not measured at the same time with the hardware fault output by the Sensor Module.
The fault value can only be represented between -32767 ... 32767 dec (-770 ... 770 mV).
The signal level is not evaluated unless the following conditions are satisfied:
- Sensor Module properties available (r0459.31 = 1).
- Monitoring active (p0437.31 = 1).
Remedy: - check the speed range; frequency characteristic (amplitude characteristic) of the measuring equipment might not be sufficient for the speed range
- check that the encoder cables and shielding are routed in compliance with EMC.
- check the plug connections and contacts of the encoder cable.
- check whether the zero mark is connected and the signal cables RP and RN have been connected correctly
- replace the encoder cable.
- if the coding disk is soiled or the lighting aged, replace the encoder.
Reaction upon N: NONE
Acknowl. upon N: NONE
Reaction upon A: NONE
Acknowl. upon A: NONE

© Siemens AG 2012 All Rights Reserved

F32110 (N, A) Encoder 2: Serial communications error

Message value: Fault cause: %1 bin

Drive object: VECTOR_G

Reaction: OFF1 (IASC/DCBRAKE, NONE, OFF2, OFF3)

Acknowledge: PULSE INHIBIT

Cause: Serial communication protocol transfer error between the encoder and evaluation module.
Fault value (r0949, interpret binary):
Bit 0: Alarm bit in the position protocol.
Bit 1: Incorrect quiescent level on the data line.
Bit 2: Encoder does not respond (does not supply a start bit within 50 ms).
Bit 3: CRC error: The checksum in the protocol from the encoder does not match the data.
Bit 4: Encoder acknowledgement error: The encoder incorrectly understood the task (request) or cannot execute it.
Bit 5: Internal error in the serial driver: An illegal mode command was requested.
Bit 6: Timeout when cyclically reading.
Bit 7: Timeout for the register communication.
Bit 8: Protocol is too long (e.g. > 64 bits).
Bit 9: Receive buffer overflow.
Bit 10: Frame error when reading twice.
Bit 11: Parity error.
Bit 12: Data line signal level error during the monoflop time.
Bit 13: Data line incorrect.
Bit 14: Fault for the register communication.

Remedy: Re fault value, bit 0 = 1:
- Enc defect F31111 may provide additional details.
Re fault value, bit 1 = 1:
- Incorrect encoder type / replace the encoder or encoder cable.
Re fault value, bit 2 = 1:
- Incorrect encoder type / replace the encoder or encoder cable.
Re fault value, bit 3 = 1:
- EMC / connect the cable shield, replace the encoder or encoder cable.
Re fault value, bit 4 = 1:
- EMC / connect the cable shield, replace the encoder or encoder cable, replace the Sensor Module.
Re fault value, bit 5 = 1:
- EMC / connect the cable shield, replace the encoder or encoder cable, replace the Sensor Module.
Re fault value, bit 6 = 1:
- Update Sensor Module firmware.
Re fault value, bit 7 = 1:
- Incorrect encoder type / replace the encoder or encoder cable.
Re fault value, bit 8 = 1:
- Check parameterization (p0429.2).
Re fault value, bit 9 = 1:
- EMC / connect the cable shield, replace the encoder or encoder cable, replace the Sensor Module.
Re fault value, bit 10 = 1:
- Check parameterization (p0429.2, p0449).
Re fault value, bit 11 = 1:
- Check parameterization (p0436).
Re fault value, bit 12 = 1:
- Check parameterization (p0429.6).
Re fault value, bit 13 = 1:
- Check data line.
Re fault value, bit 14 = 1:
- Incorrect encoder type / replace the encoder or encoder cable.

Reaction upon N: NONE

Acknowl. upon N: NONE

Reaction upon A: NONE

Acknowl. upon A: NONE

© Siemens AG 2012 All Rights Reserved

F32111 (N, A) Encoder 2: Absolute encoder internal fault

Message value: Fault cause: %1 bin, additional information: %2

Drive object: VECTOR_G

Reaction: OFF1 (IASC/DCBRAKE, NONE, OFF2, OFF3)

Acknowledge: PULSE INHIBIT

Cause: The absolute encoder fault word supplies fault bits that have been set.
Fault value (r0949, interpret binary):
yyyyxxxx hex: yyyy = supplementary information, xxxx = fault cause
yyyy = 0:
Bit 0: Lighting system failed.
Bit 1: Signal amplitude too low.
Bit 2: Position value incorrect.
Bit 3: Encoder power supply overvoltage condition.
Bit 4: Encoder power supply undervoltage condition.
Bit 5: Encoder power supply overcurrent condition.
Bit 6: The battery must be changed.
yyyy = 1:
Bit 0: Signal amplitude outside the control range.
Bit 1: Error multiturn interface
Bit 2: Internal data error (singleturn/multiturn not with single steps).
Bit 3: Error EEPROM interface.
Bit 4: SAR converter error.
Bit 5: Fault for the register data transfer.
Bit 6: Internal error identified at the error pin (nErr).
Bit 7: Temperature threshold exceeded or fallen below.

Remedy: For yyyy = 0:
Re fault value, bit 0 = 1:
Encoder is defective. Replace the encoder, where the motor encoder has a direct DRIVE-CLiQ socket: Replace the motor.
Re fault value, bit 1 = 1:
Encoder is defective. Replace the encoder, where the motor encoder has a direct DRIVE-CLiQ socket: Replace the motor.
Re fault value, bit 2 = 1:
Encoder is defective. Replace the encoder, where the motor encoder has a direct DRIVE-CLiQ socket: Replace the motor.
Re fault value, bit 3 = 1:
5 V power supply voltage fault.
When using an SMC: Check the plug-in cable between the encoder and SMC or replace the SMC.
When a motor encoder with a direct DRIVE-CLiQ connection is used: Replace the motor.
Re fault value, bit 4 = 1:
5 V power supply voltage fault.
When using an SMC: Check the plug-in cable between the encoder and SMC or replace the SMC.
When using a motor with DRIVE-CLiQ: Replace the motor.
Re fault value, bit 5 = 1:
Encoder is defective. Replace the encoder, where the motor encoder has a direct DRIVE-CLiQ socket: Replace the motor.
Re fault value, bit 6 = 1:
The battery must be changed (only for encoders with battery back-up).
For yyyy = 1:
Encoder is defective. Replace encoder.

Reaction upon N: NONE

Acknowl. upon N: NONE

Reaction upon A: NONE

Acknowl. upon A: NONE

© Siemens AG 2012 All Rights Reserved

F32115 (N, A) Encoder 2: Amplitude error track A or B (A^2 + B^2)

Message value: A track: %1, B-track: %2

Drive object: VECTOR_G

Reaction: OFF1 (IASC/DCBRAKE, NONE, OFF2, OFF3)

Acknowledge: PULSE INHIBIT

Cause: The amplitude (root of A^2 + B^2) for encoder 2 exceeds the permissible tolerance.
Fault value (r0949, interpret hexadecimal):
yyyyxxxx hex:
yyyy = Signal level, track B (16 bits with sign).
xxxx = Signal level, track A (16 bits with sign).
The nominal signal level of the encoder must lie in the range 375 mV to 600 mV (500 mV -25/+20 %).
The response thresholds are < 170 mV (observe the frequency response of the encoder) and > 750 mV.
A signal level of 500 mV peak value corresponds to the numerical value 5333 hex = 21299 dec.
Note for sensors modules for resolvers (e. g. SMC10):
The nominal signal level is at 2900 mV (2.0 Vrms). The response thresholds are < 1070 mV and > 3582 mV.
A signal level of 2900 mV peak value corresponds to the numerical value 6666 hex = 26214 dec.
Note:
The analog values of the amplitude error are not measured at the same time with the hardware fault output by the Sensor Module.

Remedy: - check that the encoder cables and shielding are routed in compliance with EMC.
- check the plug connections
- replace the encoder or encoder cable
- check the Sensor Module (e.g. contacts).
The following applies to measuring systems without their own bearing system:
- adjust the scanning head and check the bearing system of the measuring wheel.
The following applies for measuring systems with their own bearing system:
- ensure that the encoder housing is not subject to any axial force.

Reaction upon N: NONE

Acknowl. upon N: NONE

Reaction upon A: NONE

Acknowl. upon A: NONE

F32116 (N, A) Encoder 2: Amplitude error monitoring track A + B

Message value: A track: %1, B-track: %2

Drive object: VECTOR_G

Reaction: OFF1 (IASC/DCBRAKE, NONE, OFF2, OFF3)

Acknowledge: IMMEDIATELY

Cause: The amplitude of the rectified encoder signals A and B and the amplitude from the roots of A^2 + B^2 for encoder 2 are not within the tolerance bandwidth.
Fault value (r0949, interpret hexadecimal):
yyyyxxxx hex:
yyyy = Signal level, track B (16 bits with sign).
xxxx = Signal level, track A (16 bits with sign).
The nominal signal level of the encoder must lie in the range 375 mV to 600 mV (500 mV -25/+20 %).
The response thresholds are < 130 mV (observe the frequency response of the encoder) and > 955 mV.
A signal level of 500 mV peak value corresponds to the numerical value 5333 hex = 21299 dec.
Note:
The analog values of the amplitude error are not measured at the same time with the hardware fault output by the Sensor Module.

Remedy: - check that the encoder cables and shielding are routed in compliance with EMC.
- check the plug connections
- replace the encoder or encoder cable
- check the Sensor Module (e.g. contacts).

Reaction upon N: NONE

Acknowl. upon N: NONE

Reaction upon A: NONE

Acknowl. upon A: NONE

© Siemens AG 2012 All Rights Reserved

F32117 (N, A) Encoder 2: Inversion error signals A/B/R

Message value: Fault cause: %1 bin

Drive object: VECTOR_G

Reaction: OFF1 (IASC/DCBRAKE, NONE, OFF2, OFF3)

Acknowledge: IMMEDIATELY

Cause: For a square-wave encoder (bipolar, double ended) signals A*, B* and R* are not inverted with respect to signals A, B and R.
Fault value (r0949, interpret binary):
Bits 0 ... 15: Only for internal Siemens troubleshooting.
Bit 16: Error track A.
Bit 17: Error track B.
Bit 18: Error track R.
Note:
For SMC30 (order no.. 6SL3055-0AA00-5CA0 and 6SL3055-0AA00-5CA1 only), CUA32, and CU310, the following applies:
A square-wave encoder without track R is used and track monitoring (p0405.2 = 1) is activated.

Remedy: - Check the encoder/cable.
- Does the encoder supply signals and the associated inverted signals?
Note:
For SMC30 (order no. 6SL3055-0AA00-5CA0 and 6SL3055-0AA00-5CA1 only), the following applies:
- check the setting of p0405 (p0405.2 = 1 is only possible if the encoder is connected at X520).
For a square-wave encoder without track R, the following jumpers must be set for the connection at X520 (SMC30) or X23 (CUA32, CU310):
- pin 10 (reference signal R) <--> pin 7 (encoder power supply, ground)
- pin 11 (reference signal R inverted) <--> pin 4 (encoder power supply)

Reaction upon N: NONE

Acknowl. upon N: NONE

Reaction upon A: NONE

Acknowl. upon A: NONE

F32118 (N, A) Encoder 2: Speed difference outside the tolerance range

Message value: %1

Drive object: VECTOR_G

Reaction: OFF1 (IASC/DCBRAKE, NONE, OFF2, OFF3)

Acknowledge: PULSE INHIBIT

Cause: For an HTL/TTL encoder, the speed difference has exceeded the value in p0492 over several sampling cycles.
The change to the averaged speed actual value - if applicable - is monitored in the current controller sampling time.
Fault value (r0949, interpret decimal):
Only for internal Siemens troubleshooting.
See also: p0492

Remedy: - check the tachometer feeder cable for interruptions.
- check the grounding of the tachometer shielding.
- if required, increase the maximum speed difference per sampling cycle (p0492).

Reaction upon N: NONE

Acknowl. upon N: NONE

Reaction upon A: NONE

Acknowl. upon A: NONE

F32120 (N, A) Encoder 2: Power supply voltage fault

Message value: Fault cause: %1 bin

Drive object: VECTOR_G

Reaction: OFF1 (IASC/DCBRAKE, NONE, OFF2, OFF3)

Acknowledge: PULSE INHIBIT

Cause: A power supply fault was detected for encoder 2.
Fault value (r0949, interpret binary):
Bit 0: Undervoltage condition on the sense line.
Bit 1: Overcurrent condition for the encoder power supply.
Bit 2: Overcurrent condition for encoder power supply on cable resolver excitation negative.

© Siemens AG 2012 All Rights Reserved

Bit 3: Overcurrent condition for encoder power supply on cable resolver excitation positive.
Bit 4: The 24 V power supply through the Power Module (PM) is overloaded.
Bit 5: Overcurrent at the EnDat connection of the converter.
Bit 6: Overvoltage at the EnDat connection of the converter.
Bit 7: Hardware fault at the EnDat connection of the converter.
Note:
If the encoder cables 6FX2002-2EQ00-.... and 6FX2002-2CH00-.... are interchanged, this can result in the encoder being destroyed because the pins of the operating voltage are reversed.

Remedy: Re fault value, bit 0 = 1:
- correct encoder cable connected?
- check the plug connections of the encoder cable.
- SMC30: Check the parameterization (p0404.22).

Re fault value, bit 1 = 1:
- correct encoder cable connected?
- replace the encoder or encoder cable

Re fault value, bit 2 = 1:
- correct encoder cable connected?
- replace the encoder or encoder cable

Re fault value, bit 3 = 1:
- correct encoder cable connected?
- replace the encoder or encoder cable

Re fault value, bit 5 = 1:
- Measuring unit correctly connected at the converter?
- Replace the measuring unit or the cable to the measuring unit.

Re fault value, bit 6, 7 = 1:
- Replace the defective EnDat 2.2 converter.

Reaction upon N: NONE
Acknowl. upon N: NONE
Reaction upon A: NONE
Acknowl. upon A: NONE

F32121 (N, A) Encoder 2: Coarse position error

Message value: -
Drive object: VECTOR_G
Reaction: OFF1 (NONE, OFF2, OFF3)
Acknowledge: PULSE INHIBIT
Cause: For the actual value sensing, an error was detected on the module.
As a result of this error, it must be assumed that the actual value sensing supplies an incorrect coarse position.
Remedy: Replace the motor with DRIVE-CLiQ or the appropriate Sensor Module.
Reaction upon N: NONE
Acknowl. upon N: NONE
Reaction upon A: NONE
Acknowl. upon A: NONE

F32122 Encoder 2: Internal power supply voltage faulty

Message value: %1
Drive object: VECTOR_G
Reaction: ENCODER
Acknowledge: IMMEDIATELY
Cause: Fault in internal reference voltage of ASICs for encoder 2.
Fault value (r0949, interpret decimal):
1: Reference voltage error.
2: Internal undervoltage.
3: Internal overvoltage.
Remedy: Replace the motor with DRIVE-CLiQ or the appropriate Sensor Module.

© Siemens AG 2012 All Rights Reserved

F32123 (N, A) Encoder 2: Signal level A/B unipolar outside tolerance

Message value: Fault cause: %1 bin

Drive object: VECTOR_G

Reaction: OFF1 (IASC/DCBRAKE, NONE, OFF2, OFF3)

Acknowledge: IMMEDIATELY

Cause: The unipolar level (AP/AN or BP/BN) for encoder 2 is outside the permissible tolerance.
Fault value (r0949, interpret binary):
Bit 0 = 1: Either AP or AN outside the tolerance.
Bit 16 = 1: Either BP or BN outside the tolerance.
The unipolar nominal signal level of the encoder must lie in the range 2500 mV +/- 500 mV.
The response thresholds are < 1700 mV and > 3300 mV.
Note:
The signal level is not evaluated unless the following conditions are satisfied:
- Sensor Module properties available (r0459.31 = 1).
- Monitoring active (p0437.31 = 1).

Remedy: - make sure that the encoder cables and shielding are installed in an EMC-compliant manner.
- check the plug connections and contacts of the encoder cable.
- check the short-circuit of a signal cable with mass or the operating voltage.
- replace the encoder cable.

Reaction upon N: NONE

Acknowl. upon N: NONE

Reaction upon A: NONE

Acknowl. upon A: NONE

F32125 (N, A) Encoder 2: Amplitude error track A or B overcontrolled

Message value: A track: %1, B-track: %2

Drive object: VECTOR_G

Reaction: OFF1 (IASC/DCBRAKE, NONE, OFF2, OFF3, STOP1, STOP2)

Acknowledge: PULSE INHIBIT

Cause: The amplitude of track A or B for encoder 2 exceeds the permissible tolerance band.
Fault value (r0949, interpret hexadecimal):
yyyyxxxx hex:
yyyy = Signal level, track B (16 bits with sign).
xxxx = Signal level, track A (16 bits with sign).
The nominal signal level of the encoder must lie in the range 375 mV to 600 mV (500 mV -25/+20 %).
The response threshold is > 750 mV. This fault also occurs if the A/D converter is overcontrolled.
A signal level of 500 mV peak value corresponds to the numerical value 5333 hex = 21299 dec.
Note for sensors modules for resolvers (e. g. SMC10):
The nominal signal level is at 2900 mV (2.0 Vrms). The response threshold is > 3582 mV.
A signal level of 2900 mV peak value corresponds to the numerical value 6666 hex = 26214 dec.
Note:
The analog values of the amplitude error are not measured at the same time with the hardware fault output by the Sensor Module.

Remedy: - check that the encoder cables and shielding are routed in compliance with EMC.
- replace the encoder or encoder cable

Reaction upon N: NONE

Acknowl. upon N: NONE

Reaction upon A: NONE

Acknowl. upon A: NONE

F32126 (N, A) Encoder 2: Amplitude AB too high

Message value: Amplitude: %1, Angle: %2

Drive object: VECTOR_G

Reaction: OFF1 (IASC/DCBRAKE, NONE, OFF2, OFF3, STOP1, STOP2)

Acknowledge: PULSE INHIBIT

Cause: The amplitude (root of A^2 + B^2 or |A| + |B|) for encoder 2 exceeds the permissible tolerance.

© Siemens AG 2012 All Rights Reserved

Fault value (r0949, interpret hexadecimal):
yyyyxxxx hex:
yyyy = Angle
xxxx = Amplitude, i.e. root from A^2 + B^2 (16 bits without sign)
The nominal signal level of the encoder must lie in the range 375 mV to 600 mV (500 mV -25/+20 %).
The response threshold for (|A| + |B|) is > 1120 mV or the root of (A^2 + B^2) > 955 mV.
A signal level of 500 mV peak value corresponds to the numerical value of 299A hex = 10650 dec.
The angle 0 ... FFFF hex corresponds to 0 ... 360 degrees of the fine position. Zero degrees is present at the negative zero crossover of track B.
Note:
The analog values of the amplitude error are not measured at the same time with the hardware fault output by the Sensor Module.

Remedy: - check that the encoder cables and shielding are routed in compliance with EMC.
- replace the encoder or encoder cable

Reaction upon N: NONE
Acknowl. upon N: NONE
Reaction upon A: NONE
Acknowl. upon A: NONE

F32129 (N, A) Encoder 2: Position difference, hall sensor/track C/D and A/B too large

Message value: %1
Drive object: VECTOR_G
Reaction: OFF1 (IASC/DCBRAKE, NONE, OFF2, OFF3)
Acknowledge: PULSE INHIBIT
Cause: The error for track C/D is greater than +/-15 ° mechanical or +/-60 ° electrical or the error for the Hall signals is greater than +/-60 ° electrical.
One period of track C/D corresponds to 360 ° mechanical.
One period of the Hall signal corresponds to 360 ° electrical.
The monitoring responds if, for example, Hall sensors are connected as equivalent for the C/D tracks with the incorrect rotational sense or supply values that are not accurate enough.
After the fine synchronization using one reference mark or 2 reference marks for distance-coded encoders, this fault is no longer initiated, but instead, Alarm A32429.
Fault value (r0949, interpret decimal):
For track C/D, the following applies:
Measured deviation as mechanical angle (16 bits with sign, 182 dec corresponds to 1 °).
For Hall signals, the following applies:
Measured deviation as electrical angle (16 bits with sign, 182 dec corresponds to 1 °).

Remedy: - track C or D not connected.
- correct the direction of rotation of the Hall sensor possibly connected as equivalent for track C/D.
- check that the encoder cables are routed in compliance with EMC.
- check the adjustment of the Hall sensor.

Reaction upon N: NONE
Acknowl. upon N: NONE
Reaction upon A: NONE
Acknowl. upon A: NONE

F32130 (N, A) Encoder 2: Zero mark and position error from the coarse synchronization

Message value: Angular deviation, electrical: %1, angle, mechanical: %2
Drive object: VECTOR_G
Reaction: OFF1 (IASC/DCBRAKE, NONE, OFF2, OFF3, STOP1, STOP2)
Acknowledge: PULSE INHIBIT
Cause: After initializing the pole position using track C/D, Hall signals or pole position identification routine, the zero mark was detected outside the permissible range. For distance-coded encoders, the test is carried out after passing 2 zero marks. Fine synchronization was not carried out.
When initializing via track C/D (p0404) then it is checked whether the zero mark occurs in an angular range of +/-18 ° mechanical.
When initializing via Hall sensors (p0404) or pole position identification (p1982) it is checked whether the zero mark occurs in an angular range of +/-60 ° electrical.

© Siemens AG 2012 All Rights Reserved

Fault value (r0949, interpret hexadecimal):
yyyyxxxx hex
yyyy: Determined mechanical zero mark position (can only be used for track C/D).
xxxx: Deviation of the zero mark from the expected position as electrical angle.
Scaling: 32768 dec = 180 °

Remedy:
- check that the encoder cables are routed in compliance with EMC.
- check the plug connections
- if the Hall sensor is used as an equivalent for track C/D, check the connection.
- Check the connection of track C or D.
- replace the encoder or encoder cable

Reaction upon N: NONE
Acknowl. upon N: NONE
Reaction upon A: NONE
Acknowl. upon A: NONE

F32131 (N, A) Encoder 2: Deviation, position incremental/absolute too large

Message value: %1
Drive object: VECTOR_G
Reaction: OFF1 (IASC/DCBRAKE, NONE, OFF2, OFF3, STOP1, STOP2)
Acknowledge: PULSE INHIBIT
Cause:
Absolute encoder:
When cyclically reading the absolute position, an excessively high difference to the incremental position was detected. The absolute position that was read is rejected.
Limit value for the deviation:
- EnDat encoder: Is supplied from the encoder and is a minimum of 2 quadrants (e.g. EQI 1325 > 2 quadrants, EQN 1325 > 50 quadrants).
- other encoders: 15 pulses = 60 quadrants.
Incremental encoder:
When the zero pulse is passed, a deviation in the incremental position was detected.
For equidistant zero marks, the following applies:
- The first zero mark passed supplies the reference point for all subsequent checks. The other zero marks must have n times the distance referred to the first zero mark.
For distance-coded zero marks, the following applies:
- the first zero mark pair supplies the reference point for all subsequent checks. The other zero mark pairs must have the expected distance to the first zero mark pair.
Fault value (r0949, interpret decimal):
Deviation in quadrants (1 pulse = 4 quadrants).

Remedy:
- check that the encoder cables are routed in compliance with EMC.
- check the plug connections
- replace the encoder or encoder cable
- check whether the coding disk is dirty or there are strong ambient magnetic fields.
- adapt the parameter for the clearance between zero marks (p0425).
- if message output above speed threshold, reduce filter time if necessary (p0438).

Reaction upon N: NONE
Acknowl. upon N: NONE
Reaction upon A: NONE
Acknowl. upon A: NONE

F32135 Encoder 2: Fault when determining the position

Message value: Fault cause: %1 bin
Drive object: VECTOR_G
Reaction: OFF1 (IASC/DCBRAKE, NONE, OFF2, OFF3)
Acknowledge: PULSE INHIBIT
Cause:
The DRIVE-CLiQ encoder supplies status information via bits in an internal status/fault word.
Some of these bits cause this fault to be triggered. Other bits are status displays. The status/fault word is displayed in the fault value.
Fault value (r0949, interpret binary):
Bit 0: F1 (safety status display)
Bit 1: F2 (safety status display)

© Siemens AG 2012 All Rights Reserved

Bit 2: Lighting (reserved)
Bit 3: Signal amplitude (reserved)
Bit 4: Position value (reserved)
Bit 5: Overvoltage (reserved)
Bit 6: Undervoltage (reserved)
Bit 7: Overcurrent (reserved)
Bit 8: Battery (reserved)
Bit 16: Lighting (--> F3x135, x = 1, 2, 3)
Bit 17: Signal amplitude (--> F3x135, x = 1, 2, 3)
Bit 18: Singleturn position 1 (--> F3x135, x = 1, 2, 3)
Bit 19: Overvoltage (--> F3x135, x = 1, 2, 3)
Bit 20: Undervoltage (--> F3x135, x = 1, 2, 3)
Bit 21: Overcurrent (--> F3x135, x = 1, 2, 3)
Bit 22: Temperature exceeded (--> F3x405, x = 1, 2, 3)
Bit 23: Singleturn position 2 (safety status display)
Bit 24: Singleturn system (--> F3x135, x = 1, 2, 3)
Bit 25: Singleturn power down (--> F3x135, x = 1, 2, 3)
Bit 26: Multiturn position 1 (--> F3x136, x = 1, 2, 3)
Bit 27: Multiturn position 2 (--> F3x136, x = 1, 2, 3)
Bit 28: Multiturn system (--> F3x136, x = 1, 2, 3)
Bit 29: Multiturn power down (--> F3x136, x = 1, 2, 3)
Bit 30: Multiturn overflow/underflow (--> F3x136, x = 1, 2, 3)
Bit 31: Multiturn battery (reserved)

Remedy: Replace DRIVE-CLiQ encoder.

F32136 Encoder 2: Error when determining multiturn information

Message value: Fault cause: %1 bin

Drive object: VECTOR_G

Reaction: OFF1 (IASC/DCBRAKE, NONE, OFF2, OFF3)

Acknowledge: PULSE INHIBIT

Cause: The DRIVE-CLiQ encoder supplies status information via bits in an internal status/fault word.
Some of these bits cause this fault to be triggered. Other bits are status displays. The status/fault word is displayed in the fault value.
Fault value (r0949, interpret binary):
Bit 0: F1 (safety status display)
Bit 1: F2 (safety status display)
Bit 2: Lighting (reserved)
Bit 3: Signal amplitude (reserved)
Bit 4: Position value (reserved)
Bit 5: Overvoltage (reserved)
Bit 6: Undervoltage (reserved)
Bit 7: Overcurrent (reserved)
Bit 8: Battery (reserved)
Bit 16: Lighting (--> F3x135, x = 1, 2, 3)
Bit 17: Signal amplitude (--> F3x135, x = 1, 2, 3)
Bit 18: Singleturn position 1 (--> F3x135, x = 1, 2, 3)
Bit 19: Overvoltage (--> F3x135, x = 1, 2, 3)
Bit 20: Undervoltage (--> F3x135, x = 1, 2, 3)
Bit 21: Overcurrent (--> F3x135, x = 1, 2, 3)
Bit 22: Temperature exceeded (--> F3x405, x = 1, 2, 3)
Bit 23: Singleturn position 2 (safety status display)
Bit 24: Singleturn system (--> F3x135, x = 1, 2, 3)
Bit 25: Singleturn power down (--> F3x135, x = 1, 2, 3)
Bit 26: Multiturn position 1 (--> F3x136, x = 1, 2, 3)
Bit 27: Multiturn position 2 (--> F3x136, x = 1, 2, 3)
Bit 28: Multiturn system (--> F3x136, x = 1, 2, 3)
Bit 29: Multiturn power down (--> F3x136, x = 1, 2, 3)
Bit 30: Multiturn overflow/underflow (--> F3x136, x = 1, 2, 3)
Bit 31: Multiturn battery (reserved)

Remedy: Replace DRIVE-CLiQ encoder.

© Siemens AG 2012 All Rights Reserved

F32137 Encoder 2: Internal fault when determining the position

Message value: Fault cause: %1 bin
Drive object: VECTOR_G
Reaction: OFF1 (IASC/DCBRAKE, NONE, OFF2, OFF3)
Acknowledge: PULSE INHIBIT
Cause: The DRIVE-CLiQ encoder fault word supplies fault bits that have been set.
Fault value (r0949, interpret binary):
Only for internal Siemens troubleshooting.
Remedy: Replace encoder.

F32138 Encoder 2: Internal error when determining multiturn information

Message value: Fault cause: %1 bin
Drive object: VECTOR_G
Reaction: OFF1 (IASC/DCBRAKE, NONE, OFF2, OFF3)
Acknowledge: PULSE INHIBIT
Cause: The DRIVE-CLiQ encoder fault word supplies fault bits that have been set.
Fault value (r0949, interpret binary):
Only for internal SIEMENS troubleshooting.
Remedy: Replace encoder.

F32150 (N, A) Encoder 2: Initialization error

Message value: %1
Drive object: VECTOR_G
Reaction: OFF1 (IASC/DCBRAKE, NONE, OFF2, OFF3, STOP1, STOP2)
Acknowledge: PULSE INHIBIT
Cause: Encoder functionality selected in p0404 is not operating correctly.
Fault value (r0949, interpret hexadecimal):
Encoder malfunction.
The bit assignment corresponds to that of p0404 (e.g. bit 5 set: Error track C/D).
Remedy: - Check that p0404 is correctly set.
- check the encoder type used (incremental/absolute) and for SMCxx, the encoder cable.
- if relevant, note additional fault messages that describe the fault in detail.
Reaction upon N: NONE
Acknowl. upon N: NONE
Reaction upon A: NONE
Acknowl. upon A: NONE

F32151 (N, A) Encoder 2: Encoder speed for initialization AB too high

Message value: %1
Drive object: VECTOR_G
Reaction: ENCODER (IASC/DCBRAKE, NONE, OFF1, OFF2, OFF3, STOP1, STOP2)
Acknowledge: PULSE INHIBIT
Cause: The encoder speed is too high during while initializing the sensor.
Remedy: Reduce the speed of the encoder accordingly during initialization.
If necessary, de-activate monitoring (p0437.29).
See also: p0437 (Sensor Module configuration extended)
Reaction upon N: NONE
Acknowl. upon N: NONE
Reaction upon A: NONE
Acknowl. upon A: NONE

© Siemens AG 2012 All Rights Reserved

F32152 (N, A) Encoder 2: Maximum input frequency exceeded

Message value: %1
Drive object: VECTOR_G
Reaction: ENCODER (IASC/DCBRAKE, NONE, OFF1, OFF2, OFF3, STOP1, STOP2)
Acknowledge: PULSE INHIBIT
Cause: The maximum input frequency of the encoder evaluation has been exceeded.
Fault value (r0949, interpret decimal):
Actual input frequency in Hz.
See also: p0408 (Rotary encoder pulse No.)
Remedy: - Reduce the speed.
- Use an encoder with a lower pulse number (p0408).
Reaction upon N: NONE
Acknowl. upon N: NONE
Reaction upon A: NONE
Acknowl. upon A: NONE

F32160 (N, A) Encoder 2: Analog sensor channel A failed

Message value: %1
Drive object: VECTOR_G
Reaction: ENCODER (IASC/DCBRAKE, NONE)
Acknowledge: PULSE INHIBIT
Cause: The input voltage of the analog sensor is outside the permissible limits.
Fault value (r0949, interpret decimal):
1: Input voltage outside detectable measuring range.
2: Input voltage outside the measuring range set in (p4673).
3: The absolute value of the input voltage has exceeded the range limit (p4676).
Remedy: For fault value = 1:
- check the output voltage of the analog sensor.
For fault value = 2:
- check the voltage setting for each encoder period (p4673).
For fault value = 3:
- check the range limit setting and increase it if necessary (p4676).
Reaction upon N: NONE
Acknowl. upon N: NONE
Reaction upon A: NONE
Acknowl. upon A: NONE

F32161 (N, A) Encoder 2: Analog sensor channel B failed

Message value: %1
Drive object: VECTOR_G
Reaction: ENCODER (IASC/DCBRAKE, NONE)
Acknowledge: PULSE INHIBIT
Cause: The input voltage of the analog sensor is outside the permissible limits.
Fault value (r0949, interpret decimal):
1: Input voltage outside detectable measuring range.
2: Input voltage outside the measuring range set in (p4675).
3: The absolute value of the input voltage has exceeded the range limit (p4676).
Remedy: For fault value = 1:
- check the output voltage of the analog sensor.
For fault value = 2:
- check the voltage setting for each encoder period (p4675).
For fault value = 3:
- check the range limit setting and increase it if necessary (p4676).
Reaction upon N: NONE
Acknowl. upon N: NONE
Reaction upon A: NONE
Acknowl. upon A: NONE

© Siemens AG 2012 All Rights Reserved

F32163 (N, A) Encoder 2: Analog sensor position value exceeds limit value

Message value: %1
Drive object: VECTOR_G
Reaction: ENCODER (IASC/DCBRAKE, NONE)
Acknowledge: PULSE INHIBIT
Cause: The position value has exceeded the permissible range of -0.5 ... +0.5.
Fault value (r0949, interpret decimal):
1: Position value from the LVDT sensor.
2: Position value from the encoder characteristic.
Remedy: For fault value = 1:
- Check the LVDT ratio (p4678).
- check the reference signal connection at track B.
For fault value = 2:
- check the coefficients of the characteristic (p4663 ... p4666).
Reaction upon N: NONE
Acknowl. upon N: NONE
Reaction upon A: NONE
Acknowl. upon A: NONE

A32400 (F, N) Encoder 2: Alarm threshold zero mark distance error

Message value: %1
Drive object: VECTOR_G
Reaction: NONE
Acknowledge: NONE
Cause: The measured zero mark distance does not correspond to the parameterized zero mark distance.
For distance-coded encoders, the zero mark distance is determined from zero marks detected pairs. This means that if a zero mark is missing, depending on the pair generation, this cannot result in a fault and also has no effect in the system.
The zero mark distance for the zero mark monitoring is set in p0425 (rotary encoder) or p0424 (linear encoder).
Alarm value (r2124, interpret decimal):
Last measured zero mark distance in increments (4 increments = 1 encoder pulse).
The sign designates the direction of motion when detecting the zero mark distance.
Remedy: - check that the encoder cables are routed in compliance with EMC.
- check the plug connections
. check the encoder type (encoder with equidistant zero marks).
- adapt the parameter for the distance between zero marks (p0424, p0425).
- replace the encoder or encoder cable
Reaction upon F: NONE (IASC/DCBRAKE, OFF1, OFF2, OFF3, STOP1, STOP2)
Acknowl. upon F: IMMEDIATELY
Reaction upon N: NONE
Acknowl. upon N: NONE

A32401 (F, N) Encoder 2: Alarm threshold zero mark failed

Message value: %1
Drive object: VECTOR_G
Reaction: NONE
Acknowledge: NONE
Cause: The 1.5 x parameterized zero mark distance was exceeded.
The zero mark distance for the zero mark monitoring is set in p0425 (rotary encoder) or p0424 (linear encoder).
Alarm value (r2124, interpret decimal):
Number of increments after POWER ON or since the last zero mark that was detected (4 increments = 1 encoder pulse).
Remedy: - check that the encoder cables are routed in compliance with EMC.
- check the plug connections
. check the encoder type (encoder with equidistant zero marks).
- adapt the parameter for the clearance between zero marks (p0425).
- replace the encoder or encoder cable

© Siemens AG 2012 All Rights Reserved

Reaction upon F: NONE (IASC/DCBRAKE, OFF1, OFF2, OFF3, STOP1, STOP2)
Acknowl. upon F: IMMEDIATELY
Reaction upon N: NONE
Acknowl. upon N: NONE

F32405 (N, A) Encoder 2: Temperature in the encoder evaluation inadmissible

Message value: %1
Drive object: VECTOR_G
Reaction: ENCODER (IASC/DCBRAKE, NONE, OFF1, OFF2, OFF3, STOP1, STOP2)
Acknowledge: IMMEDIATELY (POWER ON)
Cause: The encoder evaluation for a motor with DRIVE-CLiQ has detected an inadmissible temperature.
The fault threshold is 125 ° C.
Alarm value (r2124, interpret decimal):
Measured board/module temperature in 0.1 °C.
Remedy: Reduce the ambient temperature for the DRIVE-CLiQ connection of the motor.
Reaction upon N: NONE
Acknowl. upon N: NONE
Reaction upon A: NONE
Acknowl. upon A: NONE

A32407 (F, N) Encoder 2: Function limit reached

Message value: %1
Drive object: VECTOR_G
Reaction: NONE
Acknowledge: NONE
Cause: The encoder has reached one of its function limits. A service is recommended.
Alarm value (r2124, interpret decimal):
1 : Incremental signals
3 : Absolute track
4 : Code connection
Remedy: Perform service. Replace the encoder if necessary.
Note:
The actual functional reserve of an encoder can be displayed via r4651.
See also: p4650 (Encoder functional reserve component number), r4651 (Encoder functional reserve)
Reaction upon F: NONE (ENCODER, IASC/DCBRAKE, OFF1, OFF2, OFF3, STOP1, STOP2)
Acknowl. upon F: IMMEDIATELY
Reaction upon N: NONE
Acknowl. upon N: NONE

A32410 (F, N) Encoder 2: Serial communications

Message value: Fault cause: %1 bin
Drive object: VECTOR_G
Reaction: NONE
Acknowledge: NONE
Cause: Serial communication protocol transfer error between the encoder and evaluation module.
Alarm value (r2124, interpret binary):
Bit 0: Alarm bit in the position protocol.
Bit 1: Incorrect quiescent level on the data line.
Bit 2: Encoder does not respond (does not supply a start bit within 50 ms).
Bit 3: CRC error: The checksum in the protocol from the encoder does not match the data.
Bit 4: Encoder acknowledgement error: The encoder incorrectly understood the task (request) or cannot execute it.
Bit 5: Internal error in the serial driver: An illegal mode command was requested.
Bit 6: Timeout when cyclically reading.
Bit 8: Protocol is too long (e.g. > 64 bits).
Bit 9: Receive buffer overflow.
Bit 10: Frame error when reading twice.

© Siemens AG 2012 All Rights Reserved

Bit 11: Parity error.
Bit 12: Data line signal level error during the monoflop time.

Remedy: - check that the encoder cables are routed in compliance with EMC.
- check the plug connections
- replace encoder.

Reaction upon F: NONE (IASC/DCBRAKE, OFF1, OFF2, OFF3, STOP1, STOP2)

Acknowl. upon F: IMMEDIATELY

Reaction upon N: NONE

Acknowl. upon N: NONE

A32411 (F, N) Encoder 2: Absolute encoder signals internal alarms

Message value: Fault cause: %1 bin, additional information: %2

Drive object: VECTOR_G

Reaction: NONE

Acknowledge: NONE

Cause: The absolute encoder fault word includes alarm bits that have been set.
Alarm value (r2124, interpret binary):
yyyyxxxx hex: yyyy = supplementary information, xxxx = fault cause
yyyy = 0:
Bit 0: Frequency exceeded (speed too high).
Bit 1: Temperature exceeded.
Bit 2: Control reserve, lighting system exceeded.
Bit 3: Battery discharged.
Bit 4: Reference point passed.
yyyy = 1:
Bit 0: Signal amplitude outside the control range.
Bit 1: Error multiturn interface
Bit 2: Internal data error (singleturn/multiturn not with single steps).
Bit 3: Error EEPROM interface.
Bit 4: SAR converter error.
Bit 5: Fault for the register data transfer.
Bit 6: Internal error identified at the error pin (nErr).
Bit 7: Temperature threshold exceeded or fallen below.

Remedy: Replace encoder.

Reaction upon F: NONE (IASC/DCBRAKE, OFF1, OFF2, OFF3, STOP1, STOP2)

Acknowl. upon F: IMMEDIATELY

Reaction upon N: NONE

Acknowl. upon N: NONE

A32412 (F, N) Encoder 2: Error bit set in the serial protocol

Message value: %1

Drive object: VECTOR_G

Reaction: NONE

Acknowledge: NONE

Cause: The encoder sends a set error bit via the serial protocol.
Alarm value (r2124, interpret binary):
Bit 0: Fault bit in the position protocol.
Bit 1: Alarm bit in the position protocol.

Remedy: - carry out a POWER ON (power off/on) for all components.
- check that the encoder cables are routed in compliance with EMC.
- check the plug connections
- replace encoder.

Reaction upon F: NONE (IASC/DCBRAKE, OFF1, OFF2, OFF3, STOP1, STOP2)

Acknowl. upon F: IMMEDIATELY

Reaction upon N: NONE

Acknowl. upon N: NONE

© Siemens AG 2012 All Rights Reserved

A32414 (F, N) Encoder 2: Amplitude error track C or D (C^2 + D^2)

Message value: C track: %1, D track: %2

Drive object: VECTOR_G

Reaction: NONE

Acknowledge: NONE

Cause: The amplitude (C^2 + D^2) of track C or D of the encoder or from the Hall signals, is not within the tolerance bandwidth.
Alarm value (r2124, interpret hexadecimal):
yyyyxxxx hex:
yyyy = Signal level, track D (16 bits with sign).
xxxx = Signal level, track C (16 bits with sign).
The nominal signal level of the encoder must lie in the range 375 mV to 600 mV (500 mV -25/+20 %).
The response thresholds are < 230 mV (observe the frequency response of the encoder) and > 750 mV.
A signal level of 500 mV peak value corresponds to the numerical value 5333 hex = 21299 dec.
Note:
If the amplitude is not within the tolerance bandwidth, then it cannot be used to initialize the start position.

Remedy: - check that the encoder cables are routed in compliance with EMC.
- check the plug connections
- replace the encoder or encoder cable
- check the Sensor Module (e.g. contacts).
- check the Hall sensor box

Reaction upon F: NONE (IASC/DCBRAKE, OFF1, OFF2, OFF3, STOP1, STOP2)

Acknowl. upon F: IMMEDIATELY

Reaction upon N: NONE

Acknowl. upon N: NONE

A32415 (F, N) Encoder 2: Amplitude alarm track A or B (A^2 + B^2)

Message value: Amplitude: %1, Angle: %2

Drive object: VECTOR_G

Reaction: NONE

Acknowledge: NONE

Cause: The amplitude (root of A^2 + B^2) for encoder 2 exceeds the permissible tolerance.
Alarm value (r2124, interpret hexadecimal):
yyyyxxxx hex:
yyyy = Angle
xxxx = Amplitude, i.e. root from A^2 + B^2 (16 bits without sign)
The nominal signal level of the encoder must lie in the range 375 mV to 600 mV (500 mV -25/+20 %).
The response threshold is < 230 mV (observe the frequency response of the encoder).
A signal level of 500 mV peak value corresponds to the numerical value 299A hex = 10650 dec.
The angle 0 ... FFFF hex corresponds to 0 ... 360 degrees of the fine position. Zero degrees is present at the negative zero crossover of track B.
Note for sensors modules for resolvers (e. g. SMC10):
The nominal signal level is at 2900 mV (2.0 Vrms). The response threshold is < 1414 mV (1.0 Vrms).
A signal level of 2900 mV peak value corresponds to the numerical value 3333 hex = 13107 dec.
Note:
The analog values of the amplitude error are not measured at the same time with the hardware fault output by the Sensor Module.

Remedy: - check the speed range, frequency characteristic (amplitude characteristic) of the measuring equipment is not sufficient for the speed range.
- check that the encoder cables and shielding are routed in compliance with EMC.
- check the plug connections
- replace the encoder or encoder cable
- check the Sensor Module (e.g. contacts).
- if the coding disk is soiled or the lighting aged, replace the encoder.

Reaction upon F: NONE (IASC/DCBRAKE, OFF1, OFF2, OFF3, STOP1, STOP2)

Acknowl. upon F: IMMEDIATELY

Reaction upon N: NONE

Acknowl. upon N: NONE

© Siemens AG 2012 All Rights Reserved

A32418 (F, N) Encoder 2: Speed difference per sampling rate exceeded

Message value: %1
Drive object: VECTOR_G
Reaction: NONE
Acknowledge: NONE
Cause: For an HTL/TTL encoder, the speed difference between two sampling cycles has exceeded the value in p0492.
The change to the averaged speed actual value - if applicable - is monitored in the current controller sampling time.
Alarm value (r2124, interpret decimal):
Only for internal Siemens troubleshooting.
See also: p0492
Remedy: - check the tachometer feeder cable for interruptions.
- check the grounding of the tachometer shielding.
- if required, increase the setting of p0492.
Reaction upon F: NONE (IASC/DCBRAKE, OFF1, OFF2, OFF3, STOP1, STOP2)
Acknowl. upon F: IMMEDIATELY
Reaction upon N: NONE
Acknowl. upon N: NONE

A32419 (F, N) Encoder 2: Track A or B outside tolerance

Message value: %1
Drive object: VECTOR_G
Reaction: NONE
Acknowledge: NONE
Cause: The amplitude/phase/offset correction for track A or B is at the limit.
Amplitude error correction: Amplitude B / Amplitude A = 0.78 ... 1.27
Phase: <84 degrees or >96 degrees
SMC20: Offset correction: +/-140 mV
SMC10: Offset correction: +/-650 mV
Alarm value (r2124, interpret hexadecimal):
xxxx1: Minimum of the offset correction, track B
xxxx2: Maximum of the offset correction, track B
xxx1x: Minimum of the offset correction, track A
xxx2x: Maximum of the offset correction, track A
xx1xx: Minimum of the amplitude correction, track B/A
xx2xx: Maximum of the amplitude correction, track B/A
x1xxx: Minimum of the phase error correction
x2xxx: Maximum of the phase error correction
1xxxx: Minimum of the cubic correction
2xxxx: Maximum of the cubic correction
Remedy: - check mechanical mounting tolerances for encoders without their own bearings (e.g. toothed-wheel encoders).
- check the plug connections (also the transition resistance).
- check the encoder signals.
- replace the encoder or encoder cable
Reaction upon F: NONE (IASC/DCBRAKE, OFF1, OFF2, OFF3, STOP1, STOP2)
Acknowl. upon F: IMMEDIATELY
Reaction upon N: NONE
Acknowl. upon N: NONE

A32421 (F, N) Encoder 2: Coarse position error

Message value: %1
Drive object: VECTOR_G
Reaction: NONE
Acknowledge: NONE
Cause: For the actual value sensing, an error was detected. As a result of this error, it must be assumed that the actual value sensing supplies an incorrect coarse position.

© Siemens AG 2012 All Rights Reserved

Alarm value (r2124, interpret decimal):
3: The absolute position of the serial protocol and track A/B differ by half an encoder pulse. The absolute position must have its zero position in the quadrants in which both tracks are negative. In the case of a fault, the position can be incorrect by one encoder pulse.

Remedy: Re alarm value = 3:
- For a standard encoder with cable, contact the manufacturer where relevant.
- correct the assignment of the tracks to the position value that is serially transferred. To do this, the two tracks must be connected, inverted, at the Sensor Module (interchange A with A* and B with B*) or, for a programmable encoder, check the zero offset of the position.

Reaction upon F: NONE (IASC/DCBRAKE, OFF1, OFF2, OFF3, STOP1, STOP2)
Acknowl. upon F: IMMEDIATELY
Reaction upon N: NONE
Acknowl. upon N: NONE

A32422 (F, N) Encoder 2: Pulses per revolution square-wave encoder outside tolerance bandwidth

Message value: %1
Drive object: VECTOR_G
Reaction: NONE
Acknowledge: NONE
Cause: The measured zero mark distance does not correspond to the parameterized zero mark distance.
This alarm is triggered with active square-wave encoder PPR correction and re-parameterized fault 31131 if the accumulator contains larger values than p4683 or p4684.
The zero mark distance for zero mark monitoring is set in p0425 (rotary encoder).
Alarm value (r2124, interpret decimal):
accumulated differential pulses in encoder pulses.

Remedy:
- check that the encoder cables are routed in compliance with EMC.
- check the plug connections
. check the encoder type (encoder with equidistant zero marks).
- adapt the parameter for the distance between zero marks (p0424, p0425).
- replace the encoder or encoder cable

Reaction upon F: NONE (IASC/DCBRAKE, OFF1, OFF2, OFF3, STOP1, STOP2)
Acknowl. upon F: IMMEDIATELY
Reaction upon N: NONE
Acknowl. upon N: NONE

A32429 (F, N) Encoder 2: Position difference, hall sensor/track C/D and A/B too large

Message value: %1
Drive object: VECTOR_G
Reaction: NONE
Acknowledge: NONE
Cause: The error for track C/D is greater than +/-15 ° mechanical or +/-60 ° electrical or the error for the Hall signals is greater than +/-60 ° electrical.
One period of track C/D corresponds to 360 ° mechanical.
One period of the Hall signal corresponds to 360 ° electrical.
The monitoring responds if, for example, Hall sensors are connected as equivalent for the C/D tracks with the incorrect rotational sense or supply values that are not accurate enough.
Alarm value (r2124, interpret decimal):
For track C/D, the following applies:
Measured deviation as mechanical angle (16 bits with sign, 182 dec corresponds to 1 °).
For Hall signals, the following applies:
Measured deviation as electrical angle (16 bits with sign, 182 dec corresponds to 1 °).

Remedy:
- track C or D not connected.
- correct the direction of rotation of the Hall sensor possibly connected as equivalent for track C/D.
- check that the encoder cables are routed in compliance with EMC.
- check the adjustment of the Hall sensor.

Reaction upon F: NONE (IASC/DCBRAKE, OFF1, OFF2, OFF3, STOP1, STOP2)
Acknowl. upon F: IMMEDIATELY

© Siemens AG 2012 All Rights Reserved

Reaction upon N: NONE
Acknowl. upon N: NONE

A32431 (F, N) Encoder 2: Deviation, position incremental/absolute too large

Message value: %1
Drive object: VECTOR_G
Reaction: NONE
Acknowledge: NONE
Cause: When the zero pulse is passed, a deviation in the incremental position was detected.
For equidistant zero marks, the following applies:
- The first zero mark passed supplies the reference point for all subsequent checks. The other zero marks must have n times the distance referred to the first zero mark.
For distance-coded zero marks, the following applies:
- the first zero mark pair supplies the reference point for all subsequent checks. The other zero mark pairs must have the expected distance to the first zero mark pair.
Alarm value (r2124, interpret decimal):
Deviation in quadrants (1 pulse = 4 quadrants).
Remedy: - check that the encoder cables are routed in compliance with EMC.
- check the plug connections
- replace the encoder or encoder cable
- Clean coding disk or remove strong magnetic fields.
Reaction upon F: NONE (IASC/DCBRAKE, OFF1, OFF2, OFF3, STOP1, STOP2)
Acknowl. upon F: IMMEDIATELY
Reaction upon N: NONE
Acknowl. upon N: NONE

A32432 (F, N) Encoder 2: Rotor position adaptation corrects deviation

Message value: %1
Drive object: VECTOR_G
Reaction: NONE
Acknowledge: NONE
Cause: For track A/B, pulses have been lost or too many have been counted. These pulses are presently being corrected.
Alarm value (r2124, interpret decimal):
Last measured deviation of zero mark in increments (4 increments = 1 encoder pulse).
The sign designates the direction of motion when detecting the zero mark distance.
Remedy: - check that the encoder cables are routed in compliance with EMC.
- check the plug connections
- replace the encoder or encoder cable
- check encoder limit frequency.
- adapt the parameter for the distance between zero marks (p0424, p0425).
Reaction upon F: NONE (ENCODER, IASC/DCBRAKE, OFF1, OFF2, OFF3, STOP1, STOP2)
Acknowl. upon F: IMMEDIATELY
Reaction upon N: NONE
Acknowl. upon N: NONE

A32442 (F, N) Encoder 2: Battery voltage pre-alarm

Message value: -
Drive object: VECTOR_G
Reaction: NONE
Acknowledge: NONE
Cause: When switched-off, the encoder uses a battery to back up the multiturn information. The battery voltage is no longer sufficient to check the multiturn information.
Remedy: Replace battery.
Reaction upon F: NONE (ENCODER, IASC/DCBRAKE, OFF1, OFF2, OFF3, STOP1, STOP2)
Acknowl. upon F: IMMEDIATELY
Reaction upon N: NONE
Acknowl. upon N: NONE

© Siemens AG 2012 All Rights Reserved

A32443 (F, N) Encoder 2: Unipolar CD signal level outside specification

Message value: Fault cause: %1 bin

Drive object: VECTOR_G

Reaction: NONE

Acknowledge: NONE

Cause: The unipolar level (CP/CN or DP/DN) for encoder 2 is outside the permissible tolerance.
Alarm value (r2124, interpret binary):
Bit 0 = 1: Either CP or CN outside the tolerance.
Bit 16 = 1: Either DP or DN outside the tolerance.
The unipolar nominal signal level of the encoder must lie in the range 2500 mV +/- 500 mV.
The response thresholds are < 1700 mV and > 3300 mV.
Note:
The signal level is not evaluated unless the following conditions are satisfied:
- Sensor Module properties available (r0459.31 = 1).
- Monitoring active (p0437.31 = 1).

Remedy: - check that the encoder cables and shielding are routed in compliance with EMC.
- check the plug connections and contacts of the encoder cable.
- are the C/D tracks connected correctly (have the signal lines CP and CN or DP and DN been interchanged)?
- replace the encoder cable.

Reaction upon F: NONE (IASC/DCBRAKE, OFF1, OFF2, OFF3, STOP1, STOP2)

Acknowl. upon F: IMMEDIATELY

Reaction upon N: NONE

Acknowl. upon N: NONE

A32460 (N) Encoder 2: Analog sensor channel A failed

Message value: %1

Drive object: VECTOR_G

Reaction: NONE

Acknowledge: NONE

Cause: The input voltage of the analog sensor is outside the permissible limits.
Alarm value (r2124, interpret decimal):
1: Input voltage outside detectable measuring range.
2: Input voltage outside measuring range set in p4673.
3: The absolute value of the input voltage has exceeded the range limit (p4676).

Remedy: Re alarm value = 1:
- check the output voltage of the analog sensor.
Re alarm value = 2:
- check the voltage setting for each encoder period (p4673).
Re alarm value = 3:
- check the range limit setting and increase it if necessary (p4676).

Reaction upon N: NONE

Acknowl. upon N: NONE

A32461 (N) Encoder 2: Analog sensor channel B failed

Message value: %1

Drive object: VECTOR_G

Reaction: NONE

Acknowledge: NONE

Cause: The input voltage of the analog sensor is outside the permissible limits.
Alarm value (r2124, interpret decimal):
1: Input voltage outside detectable measuring range.
2: Input voltage outside the measuring range set in (p4675).
3: The absolute value of the input voltage has exceeded the range limit (p4676).

Remedy: Re alarm value = 1:
- check the output voltage of the analog sensor.
Re alarm value = 2:
- check the voltage setting for each encoder period (p4675).

© Siemens AG 2012 All Rights Reserved

Re alarm value = 3:
- check the range limit setting and increase it if necessary (p4676).

Reaction upon N: NONE
Acknowl. upon N: NONE

A32462 (N) Encoder 2: Analog sensor, no channel active

Message value: %1
Drive object: VECTOR_G
Reaction: NONE
Acknowledge: NONE
Cause: Channel A and B are not activated for the analog sensor.
Remedy: - activate channel A and/or channel B (p4670).
- check the encoder configuration (p0404.17).
See also: p4670 (Analog sensor configuration)

Reaction upon N: NONE
Acknowl. upon N: NONE

A32463 (N) Encoder 2: Analog sensor position value exceeds limit value

Message value: %1
Drive object: VECTOR_G
Reaction: NONE
Acknowledge: NONE
Cause: The position value has exceeded the permissible range of -0.5 ... +0.5.
Alarm value (r2124, interpret decimal):
1: Position value from the LVDT sensor.
2: Position value from the encoder characteristic.
Remedy: Re alarm value = 1:
- Check the LVDT ratio (p4678).
- check the reference signal connection at track B.
Re alarm value = 2:
- check the coefficients of the characteristic (p4663 ... p4666).

Reaction upon N: NONE
Acknowl. upon N: NONE

A32470 (F, N) Encoder 2: Soiling detected

Message value: -
Drive object: VECTOR_G
Reaction: NONE
Acknowledge: NONE
Cause: In the case of the alternative encoder system interface on the Sensor Module Cabinet 30 (SMC30), encoder soiling is signaled via a 0 signal at terminal X521.7.
Remedy: - check the plug connections
- replace the encoder or encoder cable

Reaction upon F: NONE (IASC/DCBRAKE, OFF1, OFF2, OFF3, STOP1, STOP2)
Acknowl. upon F: IMMEDIATELY
Reaction upon N: NONE
Acknowl. upon N: NONE

F32500 (N, A) Encoder 2: Position tracking traversing range exceeded

Message value: -
Drive object: VECTOR_G
Reaction: OFF1 (NONE, OFF2, OFF3)
Acknowledge: IMMEDIATELY
Cause: For a configured linear axis without modulo correction, the drive/encoder has exceeded the maximum possible traversing range. The value should be read in p0412 and interpreted as the number of motor revolutions.

© Siemens AG 2012 All Rights Reserved

For p0411.0 = 1, the maximum traversing range for the configured linear axis is defined to be 64x (+/- 32x) of p0421.
For p0411.3 = 1, the maximum traversing range for the configured linear axis is pre-set (default value) to the highest possible value and is +/-p0412/2 (rounded off to complete revolutions). The highest possible value depends on the pulse number (p0408) and the fine resolution (p0419).

Remedy: The fault should be resolved as follows:
- select encoder commissioning (p0010 = 4).
- reset the position tracking as follows (p0411.2 = 1).
- de-select encoder commissioning (p0010 = 0).

The fault should then be acknowledged and the absolute encoder adjusted.

Reaction upon N: NONE
Acknowl. upon N: NONE
Reaction upon A: NONE
Acknowl. upon A: NONE

F32501 (N, A) Encoder 2: Position tracking encoder position outside tolerance window

Message value: %1
Drive object: VECTOR_G
Reaction: OFF1 (NONE, OFF2, OFF3)
Acknowledge: IMMEDIATELY
Cause: When powered down, the drive/encoder was moved through a distance greater than was parameterized in the tolerance window. It is possible that there is no longer any reference between the mechanical system and encoder.
Fault value (r0949, interpret decimal):
Deviation (difference) to the last encoder position in increments of the absolute value.
The sign designates the traversing direction.
Note:
The deviation (difference) found is also displayed in r0477.
See also: p0413 (Measuring gear, position tracking tolerance window), r0477 (Measuring gear, position difference)

Remedy: Reset the position tracking as follows:
- select encoder commissioning (p0010 = 4).
- reset the position tracking as follows (p0411.2 = 1).
- de-select encoder commissioning (p0010 = 0).

The fault should then be acknowledged and, if necessary, the absolute encoder adjusted (p2507).
See also: p0010

Reaction upon N: NONE
Acknowl. upon N: NONE
Reaction upon A: NONE
Acknowl. upon A: NONE

F32502 (N, A) Encoder 2: Encoder with measuring gear, without valid signals

Message value: -
Drive object: VECTOR_G
Reaction: OFF1 (OFF2, OFF3)
Acknowledge: IMMEDIATELY
Cause: The encoder with measuring gear no longer provides any valid signals.
Remedy: It must be ensured that all of the encoders, with mounted measuring gear, provide valid actual values in operation.
Reaction upon N: NONE
Acknowl. upon N: NONE
Reaction upon A: NONE
Acknowl. upon A: NONE

F32503 (N, A) Encoder 2: Position tracking cannot be reset

Message value: -
Drive object: VECTOR_G
Reaction: OFF1 (NONE, OFF2, OFF3)
Acknowledge: IMMEDIATELY
Cause: The position tracking for the measuring gear cannot be reset.

© Siemens AG 2012 All Rights Reserved

Remedy: The fault should be resolved as follows:
- select encoder commissioning (p0010 = 4).
- reset the position tracking as follows (p0411.2 = 1).
- de-select encoder commissioning (p0010 = 0).
The fault should then be acknowledged and the absolute encoder adjusted.

Reaction upon N: NONE
Acknowl. upon N: NONE
Reaction upon A: NONE
Acknowl. upon A: NONE

A32700 Encoder 2: Effectivity test does not supply the expected value

Message value: Fault cause: %1 bin
Drive object: VECTOR_G
Reaction: NONE
Acknowledge: NONE
Cause: The DRIVE-CLiQ encoder fault word supplies fault bits that have been set.
Fault value (r0949, interpret binary):
Bit x = 1: Effectivity test x unsuccessful.
Remedy: Replace encoder.

N32800 (F) Encoder 2: Group signal

Message value: -
Drive object: VECTOR_G
Reaction: OFF1 (IASC/DCBRAKE, NONE, OFF2, OFF3)
Acknowledge: NONE
Cause: The motor encoder has detected at least one fault.
Remedy: Evaluates other actual messages.
Reaction upon F: OFF1 (IASC/DCBRAKE, NONE, OFF2, OFF3)
Acknowl. upon F: IMMEDIATELY

F32801 (N, A) Encoder 2 DRIVE-CLiQ: Sign-of-life missing

Message value: Component number: %1, fault cause: %2
Drive object: VECTOR_G
Reaction: OFF1 (IASC/DCBRAKE, NONE, OFF2, OFF3)
Acknowledge: IMMEDIATELY
Cause: A DRIVE-CLiQ communication error has occurred from the Control Unit to the encoder involved.
Fault cause:
10 (= 0A hex):
The sign-of-life bit in the receive telegram is not set.
Note regarding the message value:
The individual information is coded as follows in the message value (r0949/r2124):
0000yyxx hex: yy = component number, xx = error cause
Remedy: - check the electrical cabinet design and cable routing for EMC compliance
- replace the component involved.
See also: p9916 (DRIVE-CLiQ data transfer error shutdown threshold slave)

Reaction upon N: NONE
Acknowl. upon N: NONE
Reaction upon A: NONE
Acknowl. upon A: NONE

F32802 (N, A) Encoder 2: Time slice overflow

Message value: %1
Drive object: VECTOR_G
Reaction: OFF1 (IASC/DCBRAKE, NONE, OFF2, OFF3)
Acknowledge: IMMEDIATELY
Cause: A time slice overflow has occurred in encoder 2.

© Siemens AG 2012 All Rights Reserved

Fault value (r0949, interpret hexadecimal):
yx hex: y = function involved (Siemens-internal fault diagnostics), x = time slice involved
x = 9:
Time slice overflow of the fast (current controller clock cycle) time slice.
x = A:
Time slice overflow of the average time slice.
x = C:
Time slice overflow of the slow time slice.
yx = 3E7:
Timeout when waiting for SYNO (e.g. unexpected return to non-cyclic operation).

Remedy: Increase the current controller sampling time
Note:
For a current controller sampling time = 31.25 µs, use an SMx20 with order number 6SL3055-0AA00-5xA3.

Reaction upon N: NONE
Acknowl. upon N: NONE
Reaction upon A: NONE
Acknowl. upon A: NONE

F32804 (N, A) Encoder 2: Checksum error

Message value: %1
Drive object: VECTOR_G
Reaction: OFF1 (IASC/DCBRAKE, NONE, OFF2, OFF3)
Acknowledge: POWER ON (IMMEDIATELY)
Cause: A checksum error has occurred when reading-out the program memory on the Sensor Module.
Fault value (r0949, interpret hexadecimal):
yyyyxxxx hex
yyyy: Memory area involved.
xxxx: Difference between the checksum at POWER ON and the actual checksum.
Remedy:
- carry out a POWER ON (power off/on).
- upgrade firmware to later version (>= V2.6 HF3, >= V4.3 SP2, >= V4.4).
- check whether the permissible ambient temperature for the component is maintained.
- replace the Sensor Module.

Reaction upon N: NONE
Acknowl. upon N: NONE
Reaction upon A: NONE
Acknowl. upon A: NONE

F32805 (N, A) Encoder 2: EPROM checksum error

Message value: %1
Drive object: VECTOR_G
Reaction: OFF1 (IASC/DCBRAKE, NONE, OFF2, OFF3)
Acknowledge: IMMEDIATELY
Cause: Internal parameter data is corrupted.
Fault value (r0949, interpret hexadecimal):
01: EEPROM access error.
02: Too many blocks in the EEPROM.
Remedy: Replace the module.

Reaction upon N: NONE
Acknowl. upon N: NONE
Reaction upon A: NONE
Acknowl. upon A: NONE

© Siemens AG 2012 All Rights Reserved

F32806 (N, A) Encoder 2: Initialization error

Message value: %1

Drive object: VECTOR_G

Reaction: OFF1 (IASC/DCBRAKE, NONE, OFF2, OFF3)

Acknowledge: PULSE INHIBIT

Cause: The encoder was not successfully initialized.
Fault value (r0949, interpret hexadecimal):
Bit 0, 1: Encoder initialization with the motor rotating has failed (deviation involving coarse and fine position in encoder pulses/4).
Bit 2: Mid-voltage matching for track A unsuccessful.
Bit 3: Mid-voltage matching for track B unsuccessful.
Bit 4: Mid-voltage matching for acceleration input unsuccessful.
Bit 5: Mid-voltage matching for track safety A unsuccessful.
Bit 6: Mid-voltage matching for track safety B unsuccessful.
Bit 7: Mid-voltage matching for track C unsuccessful.
Bit 8: Mid-voltage matching for track D unsuccessful.
Bit 9: Mid-voltage matching for track R unsuccessful.
Bit 10: The difference in mid-voltages between A and B is too great (> 0.5 V)
Bit 11: The difference in mid-voltages between C and D is too great (> 0.5 V)
Bit 12: The difference in mid-voltages between safety A and safety B is too great (> 0.5 V)
Bit 13: The difference in mid-voltages between A and safety B is too great (> 0.5 V)
Bit 14: The difference in mid-voltages between B and safety A is too great (> 0.5 V)
Bit 15: The standard deviation of the calculated mid-voltages is too great (> 0.3 V)
Bit 16: Internal fault - fault when reading a register (CAFE)
Bit 17: Internal fault - fault when writing a register (CAFE)
Bit 18: Internal fault: No mid-voltage matching available
Bit 19: Internal error - ADC access error.
Bit 20: Internal error - no zero crossover found.
Bit 28: Error while initializing the EnDat 2.2 measuring unit.
Bit 29: Error when reading out the data from the EnDat 2.2 measuring unit.
Bit 30: EEPROM checksum of the EnDat 2.2 measuring unit incorrect.
Bit 31: Data of the EnDat 2.2 measuring unit inconsistent.
Note:
Bit 0, 1: Up to 6SL3055-0AA00-5*A0
Bits 2 ... 20: 6SL3055-0AA00-5*A1 and higher

Remedy: Acknowledge fault.
If the fault cannot be acknowledged:
Bits 2 ... 9: Check encoder power supply.
Bits 2 ... 14: Check the corresponding cable.
Bit 15 with no other bits: Check track R, check settings in p0404.
Bit 28: Check the cable between the EnDat 2.2 converter and the measuring unit.
Bit 29 ... 31: Replace the defective measuring unit.

Reaction upon N: NONE

Acknowl. upon N: NONE

Reaction upon A: NONE

Acknowl. upon A: NONE

F32811 (N, A) Encoder 2: Encoder serial number changed

Message value: -

Drive object: VECTOR_G

Reaction: OFF1 (NONE, OFF2, OFF3)

Acknowledge: IMMEDIATELY

Cause: The encoder serial number has changed. The change is only checked for encoders with serial number (e.g. EnDat encoders).
- The encoder was replaced.
Note:
With closed-loop position control, the serial number is accepted when starting the adjustment (p2507 = 2).
When the encoder is adjusted (p2507 = 3), the serial number is checked for changes and if required, the adjustment is reset (p2507 = 1).

© Siemens AG 2012 All Rights Reserved

Proceed as follows to hide serial number monitoring:
- set the following serial numbers for the corresponding Encoder Data Set: p0441= FF, p0442 = 0, p0443 = 0, p0444 = 0, p0445 = 0.

Remedy: Mechanically adjust the encoder. Accept the new serial number with p0440 = 1.

Reaction upon N: NONE
Acknowl. upon N: NONE
Reaction upon A: NONE
Acknowl. upon A: NONE

F32812 (N, A) Encoder 2: Requested cycle or RX-/TX timing not supported

Message value: %1
Drive object: VECTOR_G
Reaction: OFF2
Acknowledge: IMMEDIATELY
Cause: A cycle requested from the Control Unit or RX/TX timing is not supported.
Fault value (r0949, interpret decimal):
0: Application cycle is not supported.
1: DRIVE-CLiQ cycle is not supported.
2: Distance between RX and TX instants in time too low.
3: TX instant in time too early.
Remedy: Carry out a POWER ON (power off/on) for all components.

Reaction upon N: NONE
Acknowl. upon N: NONE
Reaction upon A: NONE
Acknowl. upon A: NONE

F32813 Encoder 2: Hardware logic unit failed

Message value: Fault cause: %1 bin
Drive object: VECTOR_G
Reaction: OFF1 (IASC/DCBRAKE, NONE, OFF2, OFF3)
Acknowledge: PULSE INHIBIT
Cause: The DRIVE-CLiQ encoder fault word supplies fault bits that have been set.
Fault value (r0949, interpret binary):
Bit 0: ALU watchdog has responded.
Bit 1: ALU has detected a sign-of-life error.
Remedy: Replace encoder.

F32820 (N, A) Encoder 2 DRIVE-CLiQ: Telegram error

Message value: Component number: %1, fault cause: %2
Drive object: VECTOR_G
Reaction: OFF1 (IASC/DCBRAKE, NONE, OFF2, OFF3)
Acknowledge: IMMEDIATELY
Cause: A DRIVE-CLiQ communication error has occurred from the Control Unit to the encoder concerned.
Fault cause:
1 (= 01 hex):
Checksum error (CRC error).
2 (= 02 hex):
Telegram is shorter than specified in the length byte or in the receive list.
3 (= 03 hex):
Telegram is longer than specified in the length byte or in the receive list.
4 (= 04 hex):
The length of the receive telegram does not match the receive list.
5 (= 05 hex):
The type of the receive telegram does not match the receive list.
6 (= 06 hex):
The address of the component in the telegram and in the receive list do not match.
7 (= 07 hex):
A SYNC telegram is expected - but the received telegram is not a SYNC telegram.

© Siemens AG 2012 All Rights Reserved

8 (= 08 hex):
No SYNC telegram is expected - but the received telegram is one.
9 (= 09 hex):
The error bit in the receive telegram is set.
16 (= 10 hex):
The receive telegram is too early.
Note regarding the message value:
The individual information is coded as follows in the message value (r0949/r2124):
0000yyxx hex: yy = component number, xx = error cause

Remedy: - carry out a POWER ON (power off/on).
- check the electrical cabinet design and cable routing for EMC compliance
- check the DRIVE-CLiQ wiring (interrupted cable, contacts, ...).
See also: p9916 (DRIVE-CLiQ data transfer error shutdown threshold slave)

Reaction upon N: NONE
Acknowl. upon N: NONE
Reaction upon A: NONE
Acknowl. upon A: NONE

F32835 (N, A) Encoder 2 DRIVE-CLiQ: Cyclic data transfer error

Message value: Component number: %1, fault cause: %2
Drive object: VECTOR_G
Reaction: OFF1 (IASC/DCBRAKE, NONE, OFF2, OFF3)
Acknowledge: IMMEDIATELY
Cause: A DRIVE-CLiQ communication error has occurred from the Control Unit to the encoder concerned. The nodes do not send and receive in synchronism.
Fault cause:
33 (= 21 hex):
The cyclic telegram has not been received.
34 (= 22 hex):
Timeout in the telegram receive list.
64 (= 40 hex):
Timeout in the telegram send list.
Note regarding the message value:
The individual information is coded as follows in the message value (r0949/r2124):
0000yyxx hex: yy = component number, xx = error cause

Remedy: - carry out a POWER ON.
- replace the component involved.
See also: p9916 (DRIVE-CLiQ data transfer error shutdown threshold slave)

Reaction upon N: NONE
Acknowl. upon N: NONE
Reaction upon A: NONE
Acknowl. upon A: NONE

F32836 (N, A) Encoder 2 DRIVE-CLiQ: Send error for DRIVE-CLiQ data

Message value: Component number: %1, fault cause: %2
Drive object: VECTOR_G
Reaction: OFF1 (IASC/DCBRAKE, NONE, OFF2, OFF3)
Acknowledge: IMMEDIATELY
Cause: A DRIVE-CLiQ communication error has occurred from the Control Unit to the encoder involved. Data were not able to be sent.
Fault cause:
65 (= 41 hex):
Telegram type does not match send list.
Note regarding the message value:
The individual information is coded as follows in the message value (r0949/r2124):
0000yyxx hex: yy = component number, xx = error cause

Remedy: Carry out a POWER ON.

Reaction upon N: NONE
Acknowl. upon N: NONE

© Siemens AG 2012 All Rights Reserved

Reaction upon A: NONE
Acknowl. upon A: NONE

F32837 (N, A) Encoder 2 DRIVE-CLiQ: Component fault

Message value: Component number: %1, fault cause: %2
Drive object: VECTOR_G
Reaction: OFF1 (IASC/DCBRAKE, NONE, OFF2, OFF3)
Acknowledge: IMMEDIATELY
Cause: Fault detected on the DRIVE-CLiQ component concerned. Faulty hardware cannot be excluded.
Fault cause:
32 (= 20 hex):
Error in the telegram header.
35 (= 23 hex):
Receive error: The telegram buffer memory contains an error.
66 (= 42 hex):
Send error: The telegram buffer memory contains an error.
67 (= 43 hex):
Send error: The telegram buffer memory contains an error.
Note regarding the message value:
The individual information is coded as follows in the message value (r0949/r2124):
0000yyxx hex: yy = component number, xx = error cause
Remedy: - check the DRIVE-CLiQ wiring (interrupted cable, contacts, ...).
- check the electrical cabinet design and cable routing for EMC compliance
- if required, use another DRIVE-CLiQ socket (p9904).
- replace the component involved.
Reaction upon N: NONE
Acknowl. upon N: NONE
Reaction upon A: NONE
Acknowl. upon A: NONE

F32845 (N, A) Encoder 2 DRIVE-CLiQ: Cyclic data transfer error

Message value: Component number: %1, fault cause: %2
Drive object: VECTOR_G
Reaction: OFF1 (IASC/DCBRAKE, NONE, OFF2, OFF3)
Acknowledge: IMMEDIATELY
Cause: A DRIVE-CLiQ communication error has occurred from the Control Unit to the encoder involved.
Fault cause:
11 (= 0B hex):
Synchronization error during alternating cyclic data transfer.
Note regarding the message value:
The individual information is coded as follows in the message value (r0949/r2124):
0000yyxx hex: yy = component number, xx = error cause
Remedy: Carry out a POWER ON.
See also: p9916 (DRIVE-CLiQ data transfer error shutdown threshold slave)
Reaction upon N: NONE
Acknowl. upon N: NONE
Reaction upon A: NONE
Acknowl. upon A: NONE

F32850 (N, A) Encoder 2: Encoder evaluation, internal software error

Message value: %1
Drive object: VECTOR_G
Reaction: OFF1 (IASC/DCBRAKE, NONE, OFF2, OFF3)
Acknowledge: POWER ON
Cause: An internal software error has occurred in the Sensor Module of encoder 2.
Fault value (r0949, interpret decimal):
1: Background time slice is blocked.
2: Checksum over the code memory is not OK.

© Siemens AG 2012 All Rights Reserved

10000: OEM memory of the EnDat encoder contains data that cannot be interpreted.
11000 ... 11499: Descriptive data from EEPROM incorrect.
11500 ... 11899: Calibration data from EEPROM incorrect.
11900 ... 11999: Configuration data from EEPROM incorrect.
12000 ... 12008: Communication with AD converter faulted.
16000: DRIVE-CLiQ encoder initialization application error.
16001: DRIVE-CLiQ encoder initialization ALU error.
16002: DRIVE-CLiQ encoder HISI / SISI initialization error.
16003: DRIVE-CLiQ encoder safety initialization error.
16004: DRIVE-CLiQ encoder internal system error.

Remedy: - replace the Sensor Module.
- if required, upgrade the firmware in the Sensor Module.
- contact the Hotline.

Reaction upon N: NONE
Acknowl. upon N: NONE
Reaction upon A: NONE
Acknowl. upon A: NONE

F32851 (N, A) Encoder 2 DRIVE-CLiQ (CU): Sign-of-life missing

Message value: Component number: %1, fault cause: %2
Drive object: VECTOR_G
Reaction: OFF1 (IASC/DCBRAKE, NONE, OFF2, OFF3)
Acknowledge: IMMEDIATELY
Cause: A DRIVE-CLiQ communication error has occurred from the Sensor Module (encoder 2) involved to the Control Unit.
The DRIVE-CLiQ component did not set the sign-of-life to the Control Unit.
Fault cause:
10 (= 0A hex):
The sign-of-life bit in the receive telegram is not set.
Note regarding the message value:
The individual information is coded as follows in the message value (r0949/r2124):
0000yyxx hex: yy = component number, xx = error cause
Remedy: Upgrade the firmware of the component involved.
Reaction upon N: NONE
Acknowl. upon N: NONE
Reaction upon A: NONE
Acknowl. upon A: NONE

F32860 (N, A) Encoder 2 DRIVE-CLiQ (CU): Telegram error

Message value: Component number: %1, fault cause: %2
Drive object: VECTOR_G
Reaction: OFF1 (IASC/DCBRAKE, NONE, OFF2, OFF3)
Acknowledge: IMMEDIATELY
Cause: A DRIVE-CLiQ communication error has occurred from the Sensor Module (encoder 2) involved to the Control Unit.
Fault cause:
1 (= 01 hex):
Checksum error (CRC error).
2 (= 02 hex):
Telegram is shorter than specified in the length byte or in the receive list.
3 (= 03 hex):
Telegram is longer than specified in the length byte or in the receive list.
4 (= 04 hex):
The length of the receive telegram does not match the receive list.
5 (= 05 hex):
The type of the receive telegram does not match the receive list.
6 (= 06 hex):
The address of the power unit in the telegram and in the receive list do not match.
9 (= 09 hex):
The error bit in the receive telegram is set.

© Siemens AG 2012 All Rights Reserved

16 (= 10 hex):
The receive telegram is too early.
17 (= 11 hex):
CRC error and the receive telegram is too early.
18 (= 12 hex):
The telegram is shorter than that specified in the length byte or in the receive list and the receive telegram is too early.
19 (= 13 hex):
The telegram is longer than that specified in the length byte or in the receive list and the receive telegram is too early.
20 (= 14 hex):
The length of the receive telegram does not match the receive list and the receive telegram is too early.
21 (= 15 hex):
The type of the receive telegram does not match the receive list and the receive telegram is too early.
22 (= 16 hex):
The address of the power unit in the telegram and in the receive list does not match and the receive telegram is too early.
25 (= 19 hex):
The error bit in the receive telegram is set and the receive telegram is too early.
Note regarding the message value:
The individual information is coded as follows in the message value (r0949/r2124):
0000yyxx hex: yy = component number, xx = error cause

Remedy: - carry out a POWER ON (power off/on).
- check the electrical cabinet design and cable routing for EMC compliance
- check the DRIVE-CLiQ wiring (interrupted cable, contacts, ...).
See also: p9915 (DRIVE-CLiQ data transfer error shutdown threshold master)

Reaction upon N: NONE
Acknowl. upon N: NONE
Reaction upon A: NONE
Acknowl. upon A: NONE

F32875 (N, A) Encoder 2 DRIVE-CLiQ (CU): Supply voltage failed

Message value: Component number: %1, fault cause: %2
Drive object: VECTOR_G
Reaction: OFF1 (IASC/DCBRAKE, NONE, OFF2, OFF3)
Acknowledge: IMMEDIATELY
Cause: The DRIVE-CLiQ communication from the DRIVE-CLiQ component involved to the Control Unit signals that the supply voltage has failed.
Fault cause:
9 (= 09 hex):
The power supply voltage for the components has failed.
Note regarding the message value:
The individual information is coded as follows in the message value (r0949/r2124):
0000yyxx hex: yy = component number, xx = error cause

Remedy: - carry out a POWER ON (power off/on).
- check the power supply voltage wiring for the DRIVE-CLiQ component (interrupted cable, contacts, ...).
- check the dimensioning of the power supply for the DRIVE-CLiQ component.

Reaction upon N: NONE
Acknowl. upon N: NONE
Reaction upon A: NONE
Acknowl. upon A: NONE

F32885 (N, A) Encoder 2 DRIVE-CLiQ (CU): Cyclic data transfer error

Message value: Component number: %1, fault cause: %2
Drive object: VECTOR_G
Reaction: OFF1 (IASC/DCBRAKE, NONE, OFF2, OFF3)
Acknowledge: IMMEDIATELY
Cause: A DRIVE-CLiQ communication error has occurred from the Sensor Module (encoder 2) involved to the Control Unit. The nodes do not send and receive in synchronism.

© Siemens AG 2012 All Rights Reserved

Fault cause:
26 (= 1A hex):
Sign-of-life bit in the receive telegram not set and the receive telegram is too early.
33 (= 21 hex):
The cyclic telegram has not been received.
34 (= 22 hex):
Timeout in the telegram receive list.
64 (= 40 hex):
Timeout in the telegram send list.
98 (= 62 hex):
Error at the transition to cyclic operation.
Note regarding the message value:
The individual information is coded as follows in the message value (r0949/r2124):
0000yyxx hex: yy = component number, xx = error cause

Remedy: - check the power supply voltage of the component involved.
- carry out a POWER ON.
- replace the component involved.
See also: p9915 (DRIVE-CLiQ data transfer error shutdown threshold master)

Reaction upon N: NONE
Acknowl. upon N: NONE
Reaction upon A: NONE
Acknowl. upon A: NONE

F32886 (N, A) Encoder 2 DRIVE-CLiQ (CU): Error when sending DRIVE-CLiQ data

Message value: Component number: %1, fault cause: %2
Drive object: VECTOR_G
Reaction: OFF1 (IASC/DCBRAKE, NONE, OFF2, OFF3)
Acknowledge: IMMEDIATELY
Cause: A DRIVE-CLiQ communication error has occurred from the Sensor Module (encoder 2) involved to the Control Unit. Data were not able to be sent.
Fault cause:
65 (= 41 hex):
Telegram type does not match send list.
Note regarding the message value:
The individual information is coded as follows in the message value (r0949/r2124):
0000yyxx hex: yy = component number, xx = error cause
Remedy: Carry out a POWER ON.
Reaction upon N: NONE
Acknowl. upon N: NONE
Reaction upon A: NONE
Acknowl. upon A: NONE

F32887 (N, A) Encoder 2 DRIVE-CLiQ (CU): Component fault

Message value: Component number: %1, fault cause: %2
Drive object: VECTOR_G
Reaction: OFF1 (IASC/DCBRAKE, NONE, OFF2, OFF3)
Acknowledge: IMMEDIATELY
Cause: Fault detected on the DRIVE-CLiQ component involved (Sensor Module for encoder 2). Faulty hardware cannot be excluded.
Fault cause:
32 (= 20 hex):
Error in the telegram header.
35 (= 23 hex):
Receive error: The telegram buffer memory contains an error.
66 (= 42 hex):
Send error: The telegram buffer memory contains an error.
67 (= 43 hex):
Send error: The telegram buffer memory contains an error.

© Siemens AG 2012 All Rights Reserved

96 (= 60 hex):
Response received too late during runtime measurement.
97 (= 61 hex):
Time taken to exchange characteristic data too long.
Note regarding the message value:
The individual information is coded as follows in the message value (r0949/r2124):
0000yyxx hex: yy = component number, xx = error cause

Remedy: - check the DRIVE-CLiQ wiring (interrupted cable, contacts, ...).
- check the electrical cabinet design and cable routing for EMC compliance
- if required, use another DRIVE-CLiQ socket (p9904).
- replace the component involved.

Reaction upon N: NONE
Acknowl. upon N: NONE
Reaction upon A: NONE
Acknowl. upon A: NONE

F32895 (N, A) Encoder 2 DRIVE-CLiQ (CU): Alternating cyclic data transfer error

Message value: Component number: %1, fault cause: %2
Drive object: VECTOR_G
Reaction: OFF1 (IASC/DCBRAKE, NONE, OFF2, OFF3)
Acknowledge: IMMEDIATELY
Cause: A DRIVE-CLiQ communication error has occurred from the Sensor Module (encoder 2) involved to the Control Unit.
Fault cause:
11 (= 0B hex):
Synchronization error during alternating cyclic data transfer.
Note regarding the message value:
The individual information is coded as follows in the message value (r0949/r2124):
0000yyxx hex: yy = component number, xx = error cause

Remedy: Carry out a POWER ON.
See also: p9915 (DRIVE-CLiQ data transfer error shutdown threshold master)

Reaction upon N: NONE
Acknowl. upon N: NONE
Reaction upon A: NONE
Acknowl. upon A: NONE

F32896 (N, A) Encoder 2 DRIVE-CLiQ (CU): Inconsistent component properties

Message value: Component number: %1
Drive object: VECTOR_G
Reaction: OFF2 (IASC/DCBRAKE, NONE, OFF1, OFF3, STOP1, STOP2)
Acknowledge: IMMEDIATELY
Cause: The properties of the DRIVE-CLiQ component (Sensor Module for encoder 2), specified by the fault value, have changed in an incompatible fashion with respect to the properties when booted. One cause can be, e.g. that a DRIVE-CLiQ cable or DRIVE-CLiQ component has been replaced.
Fault value (r0949, interpret decimal):
Component number.

Remedy: - carry out a POWER ON.
- when a component is replaced, the same component type and if possible the same firmware version should be used.
- when a cable is replaced, only cables whose length is the same as or as close as possible to the length of the original cables should be used (ensure compliance with the maximum cable length).

Reaction upon N: NONE
Acknowl. upon N: NONE
Reaction upon A: NONE
Acknowl. upon A: NONE

© Siemens AG 2012 All Rights Reserved

F32899 (N, A) Encoder 2: Unknown fault

Message value: New message: %1

Drive object: VECTOR_G

Reaction: OFF1 (IASC/DCBRAKE, NONE, OFF2, OFF3, STOP1, STOP2)

Acknowledge: IMMEDIATELY (POWER ON)

Cause: A fault occurred on the Sensor Module for encoder 2 that cannot be interpreted by the Control Unit firmware.
This can occur if the firmware on this component is more recent than the firmware on the Control Unit.
Fault value (r0949, interpret decimal):
Fault number.
Note:
If required, the significance of this new fault can be read about in a more recent description of the Control Unit.

Remedy: - replace the firmware on the Sensor Module by an older firmware version (r0148).
- upgrade the firmware on the Control Unit (r0018).

Reaction upon N: NONE

Acknowl. upon N: NONE

Reaction upon A: NONE

Acknowl. upon A: NONE

A32902 (F, N) Encoder 2: SPI-BUS error occurred

Message value: %1

Drive object: VECTOR_G

Reaction: NONE

Acknowledge: NONE

Cause: Error when operating the internal SPI bus.
Fault value (r0949, interpret hexadecimal):
Only for internal Siemens troubleshooting.

Remedy: - replace the Sensor Module.
- if required, upgrade the firmware in the Sensor Module.
- contact the Hotline.

Reaction upon F: NONE (ENCODER, IASC/DCBRAKE, OFF1, OFF2, OFF3, STOP1, STOP2)

Acknowl. upon F: IMMEDIATELY

Reaction upon N: NONE

Acknowl. upon N: NONE

F32905 (N, A) Encoder 2: Parameterization error

Message value: Parameter: %1, supplementary information: %2

Drive object: VECTOR_G

Reaction: OFF1 (IASC/DCBRAKE, NONE, OFF2, OFF3, STOP1, STOP2)

Acknowledge: IMMEDIATELY

Cause: A parameter of encoder 2 was detected as being incorrect.
It is possible that the parameterized encoder type does not match the connected encoder.
The parameter involved can be determined as follows:
- determine the parameter number using the fault value (r0949).
- determine the parameter index (p0187).
Fault value (r0949, interpret decimal):
yyyyxxxx dec: yyyy = supplementary information, xxxx = parameter
xxxx = 421:
For an EnDat/SSI encoder, the absolute position in the protocol must be less than or equal to 30 bits.
yyyy = 0:
No information available.
yyyy = 1:
The component does not support HTL level (p0405.1 = 0) combined with track monitoring A/B <> -A/B (p0405.2 = 1).
yyyy = 2:
A code number for an identified encoder has been entered into p0400, however, no identification was carried out.
Please start a new encoder identification.
yyyy = 3:
A code number for an identified encoder has been entered into p0400, however, no identification was carried out.
Please select a listed encoder in p0400 with a code number < 10000.

© Siemens AG 2012 All Rights Reserved

yyyy = 4:
This component does not support SSI encoders (p0404.9 = 1) without track A/B.
yyyy = 5:
For SQW encoder, value in p4686 greater than in p0425.
yyyy = 6:
DRIVE-CLiQ encoder cannot be used with this firmware version.
yyyy = 7:
For an SQW encoder, the Xact1 correction (p0437.2) is only permitted with equidistant zero marks.
yyyy = 8:
The motor pole pair width is not supported by the linear scale being used.
yyyy = 9:
The length of the position in the EnDat protocol may be a maximum of 32 bits.
yyyy = 10:
The connected encoder is not supported.

Remedy: - check whether the connected encoder type matches the encoder that has been parameterized.
- correct the parameter specified by the fault value (r0949) and p0187.
- re parameter number = 314:
- check the pole pair number and measuring gear ratio. The quotient of the "pole pair number" divided by the "measuring gear ratio" must be less than or equal to 1000 ((r0313 * p0433) / p0432 <= 1000).

Reaction upon N: NONE
Acknowl. upon N: NONE
Reaction upon A: NONE
Acknowl. upon A: NONE

F32912 Encoder 2: Device combination is not permissible

Message value: %1
Drive object: VECTOR_G
Reaction: ENCODER (IASC/DCBRAKE, NONE)
Acknowledge: PULSE INHIBIT
Cause: The selected device combination is not supported.
Fault value (r0949, interpret decimal):
1003:
The connected measuring unit cannot be operated with the EnDat 2.2 converter. For instance, the measuring unit has a pulse number/resolution of 2^n.
1005:
The type of measuring unit (incremental) is not supported by the EnDat 2.2 converter.
1006:
The maximum duration (31.25 µs) of the EnDat transfer was exceeded.
2001:
The set combination of current controller cycle, DP cycle and Safety cycle is not supported by the EnDat 2.2 converter.
2002:
The resolution of the linear measuring unit does not match the pole pair width of the linear motor

Remedy: Re fault value = 1003, 1005, 1006:
- Use a measuring unit that is permissible.
For fault value = 2001:
- Set a permissible cycle combination (if required, use standard settings).
For fault value = 2002:
- Use a measuring unit with a lower resolution (p0422).

A32915 (F, N) Encoder 2: Configuration error

Message value: %1
Drive object: VECTOR_G
Reaction: NONE
Acknowledge: NONE
Cause: The configuration for encoder 2 is incorrect.
Alarm value (r2124, interpret decimal):
1:
Re-parameterization between fault/alarm is not permissible.

© Siemens AG 2012 All Rights Reserved

419:
When the fine resolution Gx_XIST2 is configured, the encoder identifies a maximum possible absolute position actual value (r0483) that can no longer be represented within 32 bits.

Remedy: Re alarm value = 1:
No re-parameterization between fault/alarm.
Re alarm value = 419:
Reduce the fine resolution (p0419) or deactivate the monitoring (p0437.25), if the complete multiturn range is not required.

Reaction upon F: NONE (IASC/DCBRAKE)
Acknowl. upon F: IMMEDIATELY
Reaction upon N: NONE
Acknowl. upon N: NONE

F32916 (N, A) Encoder 2: Parameterization fault

Message value: Parameter: %1, supplementary information: %2
Drive object: VECTOR_G
Reaction: OFF1 (IASC/DCBRAKE, NONE, OFF2, OFF3, STOP1, STOP2)
Acknowledge: IMMEDIATELY
Cause: A parameter of encoder 2 was detected as being incorrect.
It is possible that the parameterized encoder type does not match the connected encoder.
The parameter involved can be determined as follows:
- determine the parameter number using the fault value (r0949).
- determine the parameter index (p0187).
Fault value (r0949, interpret decimal):
Parameter number.
Note:
This fault is only output for encoders where r0404.10 = 1 or r0404.11 = 1. It corresponds to A32905 with encoders where r0404.10 = 0 and r0404.11 = 0.

Remedy: - check whether the connected encoder type matches the encoder that has been parameterized.
- correct the parameter specified by the fault value (r0949) and p0187.

Reaction upon N: NONE
Acknowl. upon N: NONE
Reaction upon A: NONE
Acknowl. upon A: NONE

A32920 (F, N) Encoder 2: Temperature sensor fault

Message value: Fault cause: %1, channel number: %2
Drive object: VECTOR_G
Reaction: NONE
Acknowledge: NONE
Cause: When evaluating the temperature sensor, an error occurred.
Fault cause:
1 (= 01 hex):
Wire breakage or sensor not connected (KTY: R > 1630 Ohm).
2 (= 02 hex):
Measured resistance too low (PTC: R < 20 Ohm, KTY: R < 50 Ohm).
Additional values:
Only for internal Siemens troubleshooting.
Note regarding the message value:
The individual information is coded as follows in the message value (r0949/r2124):
0000yyxx hex: yy = channel number, xx = error cause

Remedy: - check that the encoder cable is the correct type and is correctly connected.
- check the temperature sensor selection in p0600 to p0603.
- replace the Sensor Module (hardware defect or incorrect calibration data).

Reaction upon F: NONE (IASC/DCBRAKE, OFF1, OFF2, OFF3, STOP1, STOP2)
Acknowl. upon F: IMMEDIATELY
Reaction upon N: NONE
Acknowl. upon N: NONE

© Siemens AG 2012 All Rights Reserved

A32930 (N) Encoder 2: Data logger has saved data

Message value: -

Drive object: VECTOR_G

Reaction: NONE

Acknowledge: NONE

Cause: For the activated function "Data logger" (p0437.0 = 1) a fault has occurred with the Sensor Module. This alarm indicates that the diagnostics data corresponding to the fault was saved on the memory card.
The diagnostics data is saved in the following folder:
/USER/SINAMICS/DATA/SMTRC00.BIN
...
/USER/SINAMICS/DATA/SMTRC07.BIN
/USER/SINAMICS/DATA/SMTRCIDX.TXT
The following information is contained in the TXT file:
- Display of the last written BIN file.
- Number of write operations that are still possible (from 10000 downwards).
Note:
Only Siemens can evaluate the BIN files.

Remedy: Not necessary.
The alarm disappears automatically.
The data logger is ready to record the next fault case.

Reaction upon N: NONE

Acknowl. upon N: NONE

A32940 (F, N) Encoder 2: Spindle sensor S1 voltage incorrect

Message value: %1

Drive object: VECTOR_G

Reaction: NONE

Acknowledge: NONE

Cause: The voltage of analog sensor S1 is outside the permissible range.
Fault value (r0949, interpret decimal):
Signal level from sensor S1.
Note:
A signal level of 500 mV corresponds to the numerical value 500 dec.

Remedy: - Check the clamped tool.
- Check the tolerance and if required, adapt (p5040).
- Check the thresholds and if required, adapt (p5041).
- Check analog sensor S1 and connections.

Reaction upon F: NONE (IASC/DCBRAKE, OFF1, OFF2, OFF3, STOP1, STOP2)

Acknowl. upon F: IMMEDIATELY

Reaction upon N: NONE

Acknowl. upon N: NONE

F32950 Encoder 2: Internal software error

Message value: %1

Drive object: VECTOR_G

Reaction: ENCODER (OFF2)

Acknowledge: POWER ON

Cause: An internal software error has occurred.
Fault value (r0949, interpret decimal):
Information about the fault source.
Only for internal Siemens troubleshooting.

Remedy: - If necessary, upgrade the firmware in the Sensor Module to a later version.
- contact the Hotline.

© Siemens AG 2012 All Rights Reserved

A32999 (F, N) Encoder 2: Unknown alarm

Message value: New message: %1

Drive object: VECTOR_G

Reaction: NONE

Acknowledge: NONE

Cause: A alarm has occurred on the Sensor Module for encoder 2 that cannot be interpreted by the Control Unit firmware.
This can occur if the firmware on this component is more recent than the firmware on the Control Unit.
Alarm value (r2124, interpret decimal):
Alarm number.
Note:
If required, the significance of this new alarm can be read about in a more recent description of the Control Unit.

Remedy: - replace the firmware on the Sensor Module by an older firmware version (r0148).
- upgrade the firmware on the Control Unit (r0018).

Reaction upon F: NONE (IASC/DCBRAKE, OFF1, OFF2, OFF3, STOP1, STOP2)

Acknowl. upon F: IMMEDIATELY (POWER ON)

Reaction upon N: NONE

Acknowl. upon N: NONE

F33100 (N, A) Encoder 3: Zero mark distance error

Message value: %1

Drive object: VECTOR_G

Reaction: OFF1 (IASC/DCBRAKE, NONE, OFF2, OFF3, STOP1, STOP2)

Acknowledge: PULSE INHIBIT

Cause: The measured zero mark distance does not correspond to the parameterized zero mark distance.
For distance-coded encoders, the zero mark distance is determined from zero marks detected pairs. This means that if a zero mark is missing, depending on the pair generation, this cannot result in a fault and also has no effect in the system.
The zero mark distance for the zero mark monitoring is set in p0425 (rotary encoder) or p0424 (linear encoder).
Fault value (r0949, interpret decimal):
Last measured zero mark distance in increments (4 increments = 1 encoder pulse).
The sign designates the direction of motion when detecting the zero mark distance.

Remedy: - check that the encoder cables are routed in compliance with EMC.
- check the plug connections
. check the encoder type (encoder with equidistant zero marks).
- adapt the parameter for the distance between zero marks (p0424, p0425).
- if message output above speed threshold, reduce filter time if necessary (p0438).
- replace the encoder or encoder cable

Reaction upon N: NONE

Acknowl. upon N: NONE

Reaction upon A: NONE

Acknowl. upon A: NONE

F33101 (N, A) Encoder 3: Zero mark failed

Message value: %1

Drive object: VECTOR_G

Reaction: OFF1 (IASC/DCBRAKE, NONE, OFF2, OFF3, STOP1, STOP2)

Acknowledge: PULSE INHIBIT

Cause: The 1.5 x parameterized zero mark distance was exceeded.
The zero mark distance for the zero mark monitoring is set in p0425 (rotary encoder) or p0424 (linear encoder).
Fault value (r0949, interpret decimal):
Number of increments after POWER ON or since the last zero mark that was detected (4 increments = 1 encoder pulse).

Remedy: - check that the encoder cables are routed in compliance with EMC.
- check the plug connections
. check the encoder type (encoder with equidistant zero marks).
- adapt the parameter for the clearance between zero marks (p0425).
- if message output above speed threshold, reduce filter time if necessary (p0438).

© Siemens AG 2012 All Rights Reserved

- when p0437.1 is active, check p4686.
- replace the encoder or encoder cable

Reaction upon N: NONE
Acknowl. upon N: NONE
Reaction upon A: NONE
Acknowl. upon A: NONE

F33103 (N, A) Encoder 3: Amplitude error, track R

Message value: R track: %1
Drive object: VECTOR_G
Reaction: OFF1 (IASC/DCBRAKE, NONE, OFF2, OFF3)
Acknowledge: IMMEDIATELY
Cause: The amplitude of the reference track signal (track R) does not lie within the tolerance bandwidth for encoder 3.
The fault can be initiated when the unipolar voltage level is exceeded (RP/RN) or if the differential amplitude is undershot.
Fault value (r0949, interpret hexadecimal):
yyyyxxxx hex: yyyy = 0, xxxx = Signal level, track R (16 bits with sign)
The response thresholds of the unipolar signal levels of the encoder are between < 1400 mV and > 3500 mV.
The response threshold for the differential signal level of the encoder is < -1600 mV.
A signal level of 500 mV peak value corresponds to the numerical value 5333 hex = 21299 dec.
Note:
The analog value of the amplitude error is not measured at the same time with the hardware fault output by the Sensor Module.
The fault value can only be represented between -32767 ... 32767 dec (-770 ... 770 mV).
The signal level is not evaluated unless the following conditions are satisfied:
- Sensor Module properties available (r0459.31 = 1).
- Monitoring active (p0437.31 = 1).

Remedy:
- check the speed range; frequency characteristic (amplitude characteristic) of the measuring equipment might not be sufficient for the speed range
- check that the encoder cables and shielding are routed in compliance with EMC.
- check the plug connections and contacts of the encoder cable.
- check whether the zero mark is connected and the signal cables RP and RN have been connected correctly
- replace the encoder cable.
- if the coding disk is soiled or the lighting aged, replace the encoder.

Reaction upon N: NONE
Acknowl. upon N: NONE
Reaction upon A: NONE
Acknowl. upon A: NONE

F33110 (N, A) Encoder 3: Serial communications error

Message value: Fault cause: %1 bin
Drive object: VECTOR_G
Reaction: OFF1 (IASC/DCBRAKE, NONE, OFF2, OFF3)
Acknowledge: PULSE INHIBIT
Cause: Serial communication protocol transfer error between the encoder and evaluation module.
Fault value (r0949, interpret binary):
Bit 0: Alarm bit in the position protocol.
Bit 1: Incorrect quiescent level on the data line.
Bit 2: Encoder does not respond (does not supply a start bit within 50 ms).
Bit 3: CRC error: The checksum in the protocol from the encoder does not match the data.
Bit 4: Encoder acknowledgement error: The encoder incorrectly understood the task (request) or cannot execute it.
Bit 5: Internal error in the serial driver: An illegal mode command was requested.
Bit 6: Timeout when cyclically reading.
Bit 7: Timeout for the register communication.
Bit 8: Protocol is too long (e.g. > 64 bits).
Bit 9: Receive buffer overflow.
Bit 10: Frame error when reading twice.
Bit 11: Parity error.
Bit 12: Data line signal level error during the monoflop time.

© Siemens AG 2012 All Rights Reserved

Bit 13: Data line incorrect.
Bit 14: Fault for the register communication.

Remedy: Re fault value, bit 0 = 1:
- Enc defect F31111 may provide additional details.
Re fault value, bit 1 = 1:
- Incorrect encoder type / replace the encoder or encoder cable.
Re fault value, bit 2 = 1:
- Incorrect encoder type / replace the encoder or encoder cable.
Re fault value, bit 3 = 1:
- EMC / connect the cable shield, replace the encoder or encoder cable.
Re fault value, bit 4 = 1:
- EMC / connect the cable shield, replace the encoder or encoder cable, replace the Sensor Module.
Re fault value, bit 5 = 1:
- EMC / connect the cable shield, replace the encoder or encoder cable, replace the Sensor Module.
Re fault value, bit 6 = 1:
- Update Sensor Module firmware.
Re fault value, bit 7 = 1:
- Incorrect encoder type / replace the encoder or encoder cable.
Re fault value, bit 8 = 1:
- Check parameterization (p0429.2).
Re fault value, bit 9 = 1:
- EMC / connect the cable shield, replace the encoder or encoder cable, replace the Sensor Module.
Re fault value, bit 10 = 1:
- Check parameterization (p0429.2, p0449).
Re fault value, bit 11 = 1:
- Check parameterization (p0436).
Re fault value, bit 12 = 1:
- Check parameterization (p0429.6).
Re fault value, bit 13 = 1:
- Check data line.
Re fault value, bit 14 = 1:
- Incorrect encoder type / replace the encoder or encoder cable.

Reaction upon N: NONE
Acknowl. upon N: NONE
Reaction upon A: NONE
Acknowl. upon A: NONE

F33111 (N, A) Encoder 3: Absolute encoder internal fault

Message value: Fault cause: %1 bin, additional information: %2

Drive object: VECTOR_G

Reaction: OFF1 (IASC/DCBRAKE, NONE, OFF2, OFF3)

Acknowledge: PULSE INHIBIT

Cause: The absolute encoder fault word supplies fault bits that have been set.
Fault value (r0949, interpret binary):
yyyyxxxx hex: yyyy = supplementary information, xxxx = fault cause
yyyy = 0:
Bit 0: Lighting system failed.
Bit 1: Signal amplitude too low.
Bit 2: Position value incorrect.
Bit 3: Encoder power supply overvoltage condition.
Bit 4: Encoder power supply undervoltage condition.
Bit 5: Encoder power supply overcurrent condition.
Bit 6: The battery must be changed.
yyyy = 1:
Bit 0: Signal amplitude outside the control range.
Bit 1: Error multiturn interface
Bit 2: Internal data error (singleturn/multiturn not with single steps).
Bit 3: Error EEPROM interface.
Bit 4: SAR converter error.
Bit 5: Fault for the register data transfer.

© Siemens AG 2012 All Rights Reserved

Bit 6: Internal error identified at the error pin (nErr).
Bit 7: Temperature threshold exceeded or fallen below.

Remedy: For yyyy = 0:
Re fault value, bit 0 = 1:
Encoder is defective. Replace the encoder, where the motor encoder has a direct DRIVE-CLiQ socket: Replace the motor.
Re fault value, bit 1 = 1:
Encoder is defective. Replace the encoder, where the motor encoder has a direct DRIVE-CLiQ socket: Replace the motor.
Re fault value, bit 2 = 1:
Encoder is defective. Replace the encoder, where the motor encoder has a direct DRIVE-CLiQ socket: Replace the motor.
Re fault value, bit 3 = 1:
5 V power supply voltage fault.
When using an SMC: Check the plug-in cable between the encoder and SMC or replace the SMC.
When a motor encoder with a direct DRIVE-CLiQ connection is used: Replace the motor.
Re fault value, bit 4 = 1:
5 V power supply voltage fault.
When using an SMC: Check the plug-in cable between the encoder and SMC or replace the SMC.
When using a motor with DRIVE-CLiQ: Replace the motor.
Re fault value, bit 5 = 1:
Encoder is defective. Replace the encoder, where the motor encoder has a direct DRIVE-CLiQ socket: Replace the motor.
Re fault value, bit 6 = 1:
The battery must be changed (only for encoders with battery back-up).
For yyyy = 1:
Encoder is defective. Replace encoder.

Reaction upon N: NONE
Acknowl. upon N: NONE
Reaction upon A: NONE
Acknowl. upon A: NONE

F33112 (N, A) Encoder 3: Error bit set in the serial protocol

Message value: %1
Drive object: VECTOR_G
Reaction: OFF1 (IASC/DCBRAKE, NONE, OFF2, OFF3)
Acknowledge: PULSE INHIBIT
Cause: The encoder sends a set error bit via the serial protocol.
Fault value (r0949, interpret binary):
Bit 0: Fault bit in the position protocol.
Remedy: For fault value, bit 0 = 1:
In the case of an EnDat encoder, F31111 may provide further details.

Reaction upon N: NONE
Acknowl. upon N: NONE
Reaction upon A: NONE
Acknowl. upon A: NONE

F33115 (N, A) Encoder 3: Amplitude error track A or B (A^2 + B^2)

Message value: A track: %1, B-track: %2
Drive object: VECTOR_G
Reaction: OFF1 (IASC/DCBRAKE, NONE, OFF2, OFF3)
Acknowledge: PULSE INHIBIT
Cause: The amplitude (root of A^2 + B^2) for encoder 3 exceeds the permissible tolerance.
Fault value (r0949, interpret hexadecimal):
yyyyxxxx hex:
yyyy = Signal level, track B (16 bits with sign).
xxxx = Signal level, track A (16 bits with sign).
The nominal signal level of the encoder must lie in the range 375 mV to 600 mV (500 mV -25/+20 %).
The response thresholds are < 170 mV (observe the frequency response of the encoder) and > 750 mV.

© Siemens AG 2012 All Rights Reserved

A signal level of 500 mV peak value corresponds to the numerical value 5333 hex = 21299 dec.
Note for sensors modules for resolvers (e. g. SMC10):
The nominal signal level is at 2900 mV (2.0 Vrms). The response thresholds are < 1070 mV and > 3582 mV.
A signal level of 2900 mV peak value corresponds to the numerical value 6666 hex = 26214 dec.
Note:
The analog values of the amplitude error are not measured at the same time with the hardware fault output by the Sensor Module.

Remedy: - check that the encoder cables and shielding are routed in compliance with EMC.
- check the plug connections
- replace the encoder or encoder cable
- check the Sensor Module (e.g. contacts).
The following applies to measuring systems without their own bearing system:
- adjust the scanning head and check the bearing system of the measuring wheel.
The following applies for measuring systems with their own bearing system:
- ensure that the encoder housing is not subject to any axial force.

Reaction upon N: NONE
Acknowl. upon N: NONE
Reaction upon A: NONE
Acknowl. upon A: NONE

F33116 (N, A) Encoder 3: Amplitude error monitoring track A + B

Message value: A track: %1, B-track: %2
Drive object: VECTOR_G
Reaction: OFF1 (IASC/DCBRAKE, NONE, OFF2, OFF3)
Acknowledge: IMMEDIATELY
Cause: The amplitude of the rectified encoder signals A and B and the amplitude from the roots of A^2 + B^2 for encoder 3 are not within the tolerance bandwidth.
Fault value (r0949, interpret hexadecimal):
yyyyxxxx hex:
yyyy = Signal level, track B (16 bits with sign).
xxxx = Signal level, track A (16 bits with sign).
The nominal signal level of the encoder must lie in the range 375 mV to 600 mV (500 mV -25/+20 %).
The response thresholds are < 130 mV (observe the frequency response of the encoder) and > 955 mV.
A signal level of 500 mV peak value corresponds to the numerical value 5333 hex = 21299 dec.
Note:
The analog values of the amplitude error are not measured at the same time with the hardware fault output by the Sensor Module.

Remedy: - check that the encoder cables and shielding are routed in compliance with EMC.
- check the plug connections
- replace the encoder or encoder cable
- check the Sensor Module (e.g. contacts).

Reaction upon N: NONE
Acknowl. upon N: NONE
Reaction upon A: NONE
Acknowl. upon A: NONE

F33117 (N, A) Encoder 3: Inversion error signals A/B/R

Message value: Fault cause: %1 bin
Drive object: VECTOR_G
Reaction: OFF1 (IASC/DCBRAKE, NONE, OFF2, OFF3)
Acknowledge: IMMEDIATELY
Cause: For a square-wave encoder (bipolar, double ended) signals A*, B* and R* are not inverted with respect to signals A, B and R.
Fault value (r0949, interpret binary):
Bits 0 ... 15: Only for internal Siemens troubleshooting.
Bit 16: Error track A.
Bit 17: Error track B.
Bit 18: Error track R.

© Siemens AG 2012 All Rights Reserved

Note:
For SMC30 (order no.. 6SL3055-0AA00-5CA0 and 6SL3055-0AA00-5CA1 only), CUA32, and CU310, the following applies:
A square-wave encoder without track R is used and track monitoring (p0405.2 = 1) is activated.

Remedy: - Check the encoder/cable.
- Does the encoder supply signals and the associated inverted signals?
Note:
For SMC30 (order no. 6SL3055-0AA00-5CA0 and 6SL3055-0AA00-5CA1 only), the following applies:
- check the setting of p0405 (p0405.2 = 1 is only possible if the encoder is connected at X520).
For a square-wave encoder without track R, the following jumpers must be set for the connection at X520 (SMC30) or X23 (CUA32, CU310):
- pin 10 (reference signal R) <--> pin 7 (encoder power supply, ground)
- pin 11 (reference signal R inverted) <--> pin 4 (encoder power supply)

Reaction upon N: NONE
Acknowl. upon N: NONE
Reaction upon A: NONE
Acknowl. upon A: NONE

F33118 (N, A) Encoder 3: Speed difference outside the tolerance range

Message value: %1
Drive object: VECTOR_G
Reaction: OFF1 (IASC/DCBRAKE, NONE, OFF2, OFF3)
Acknowledge: PULSE INHIBIT
Cause: For an HTL/TTL encoder, the speed difference has exceeded the value in p0492 over several sampling cycles.
The change to the averaged speed actual value - if applicable - is monitored in the current controller sampling time.
Fault value (r0949, interpret decimal):
Only for internal Siemens troubleshooting.
See also: p0492

Remedy: - check the tachometer feeder cable for interruptions.
- check the grounding of the tachometer shielding.
- if required, increase the maximum speed difference per sampling cycle (p0492).

Reaction upon N: NONE
Acknowl. upon N: NONE
Reaction upon A: NONE
Acknowl. upon A: NONE

F33120 (N, A) Encoder 3: Power supply voltage fault

Message value: Fault cause: %1 bin
Drive object: VECTOR_G
Reaction: OFF1 (IASC/DCBRAKE, NONE, OFF2, OFF3)
Acknowledge: PULSE INHIBIT
Cause: A power supply fault was detected for encoder 3.
Fault value (r0949, interpret binary):
Bit 0: Undervoltage condition on the sense line.
Bit 1: Overcurrent condition for the encoder power supply.
Bit 2: Overcurrent condition for encoder power supply on cable resolver excitation negative.
Bit 3: Overcurrent condition for encoder power supply on cable resolver excitation positive.
Bit 4: The 24 V power supply of the Power Module (PM) is overloaded.
Bit 5: Overcurrent at the EnDat connection of the converter.
Bit 6: Overvoltage at the EnDat connection of the converter.
Bit 7: Hardware fault at the EnDat connection of the converter.
Note:
If the encoder cables 6FX2002-2EQ00-.... and 6FX2002-2CH00-.... are interchanged, this can result in the encoder being destroyed because the pins of the operating voltage are reversed.

Remedy: Re fault value, bit 0 = 1:
- correct encoder cable connected?
- check the plug connections of the encoder cable.
- SMC30: Check the parameterization (p0404.22).

© Siemens AG 2012 All Rights Reserved

Re fault value, bit 1 = 1:
- correct encoder cable connected?
- replace the encoder or encoder cable
Re fault value, bit 2 = 1:
- correct encoder cable connected?
- replace the encoder or encoder cable
Re fault value, bit 3 = 1:
- correct encoder cable connected?
- replace the encoder or encoder cable
Re fault value, bit 5 = 1:
- Measuring unit correctly connected at the converter?
- Replace the measuring unit or the cable to the measuring unit.
Re fault value, bit 6, 7 = 1:
- Replace the defective EnDat 2.2 converter.

Reaction upon N: NONE
Acknowl. upon N: NONE
Reaction upon A: NONE
Acknowl. upon A: NONE

F33121 (N, A) Encoder 3: Coarse position error

Message value: -
Drive object: VECTOR_G
Reaction: OFF1 (NONE, OFF2, OFF3)
Acknowledge: PULSE INHIBIT
Cause: For the actual value sensing, an error was detected on the module.
As a result of this error, it must be assumed that the actual value sensing supplies an incorrect coarse position.
Remedy: Replace the motor with DRIVE-CLiQ or the appropriate Sensor Module.
Reaction upon N: NONE
Acknowl. upon N: NONE
Reaction upon A: NONE
Acknowl. upon A: NONE

F33122 Encoder 3: Internal power supply voltage faulty

Message value: %1
Drive object: VECTOR_G
Reaction: ENCODER
Acknowledge: IMMEDIATELY
Cause: Fault in internal reference voltage of ASICs for encoder 3.
Fault value (r0949, interpret decimal):
1: Reference voltage error.
2: Internal undervoltage.
3: Internal overvoltage.
Remedy: Replace the motor with DRIVE-CLiQ or the appropriate Sensor Module.

F33123 (N, A) Encoder 3: Signal level A/B unipolar outside tolerance

Message value: Fault cause: %1 bin
Drive object: VECTOR_G
Reaction: OFF1 (IASC/DCBRAKE, NONE, OFF2, OFF3)
Acknowledge: IMMEDIATELY
Cause: The unipolar level (AP/AN or BP/BN) for encoder 3 is outside the permissible tolerance.
Fault value (r0949, interpret binary):
Bit 0 = 1: Either AP or AN outside the tolerance.
Bit 16 = 1: Either BP or BN outside the tolerance.
The unipolar nominal signal level of the encoder must lie in the range 2500 mV +/- 500 mV.
The response thresholds are < 1700 mV and > 3300 mV.

© Siemens AG 2012 All Rights Reserved

Note:
The signal level is not evaluated unless the following conditions are satisfied:
- Sensor Module properties available (r0459.31 = 1).
- Monitoring active (p0437.31 = 1).

Remedy: - make sure that the encoder cables and shielding are installed in an EMC-compliant manner.
- check the plug connections and contacts of the encoder cable.
- check the short-circuit of a signal cable with mass or the operating voltage.
- replace the encoder cable.

Reaction upon N: NONE
Acknowl. upon N: NONE
Reaction upon A: NONE
Acknowl. upon A: NONE

F33125 (N, A) Encoder 3: Amplitude error track A or B overcontrolled

Message value: A track: %1, B-track: %2
Drive object: VECTOR_G
Reaction: OFF1 (IASC/DCBRAKE, NONE, OFF2, OFF3, STOP1, STOP2)
Acknowledge: PULSE INHIBIT
Cause: The amplitude of track A or B for encoder 3 exceeds the permissible tolerance band.
Fault value (r0949, interpret hexadecimal):
yyyyxxxx hex:
yyyy = Signal level, track B (16 bits with sign).
xxxx = Signal level, track A (16 bits with sign).
The nominal signal level of the encoder must lie in the range 375 mV to 600 mV (500 mV -25/+20 %).
The response threshold is > 750 mV. This fault also occurs if the A/D converter is overcontrolled.
A signal level of 500 mV peak value corresponds to the numerical value 5333 hex = 21299 dec.
Note for sensors modules for resolvers (e. g. SMC10):
The nominal signal level is at 2900 mV (2.0 Vrms). The response threshold is > 3582 mV.
A signal level of 2900 mV peak value corresponds to the numerical value 6666 hex = 26214 dec.
Note:
The analog values of the amplitude error are not measured at the same time with the hardware fault output by the Sensor Module.

Remedy: - check that the encoder cables and shielding are routed in compliance with EMC.
- replace the encoder or encoder cable

Reaction upon N: NONE
Acknowl. upon N: NONE
Reaction upon A: NONE
Acknowl. upon A: NONE

F33126 (N, A) Encoder 3: Amplitude AB too high

Message value: Amplitude: %1, Angle: %2
Drive object: VECTOR_G
Reaction: OFF1 (IASC/DCBRAKE, NONE, OFF2, OFF3, STOP1, STOP2)
Acknowledge: PULSE INHIBIT
Cause: The amplitude (root of A^2 + B^2 or |A| + |B|) for encoder 3 exceeds the permissible tolerance.
Fault value (r0949, interpret hexadecimal):
yyyyxxxx hex:
yyyy = Angle
xxxx = Amplitude, i.e. root from A^2 + B^2 (16 bits without sign)
The nominal signal level of the encoder must lie in the range 375 mV to 600 mV (500 mV -25/+20 %).
The response threshold for (|A| + |B|) is > 1120 mV or the root of (A^2 + B^2) > 955 mV.
A signal level of 500 mV peak value corresponds to the numerical value of 299A hex = 10650 dec.
The angle 0 ... FFFF hex corresponds to 0 ... 360 degrees of the fine position. Zero degrees is present at the negative zero crossover of track B.
Note:
The analog values of the amplitude error are not measured at the same time with the hardware fault output by the Sensor Module.

Remedy: - check that the encoder cables and shielding are routed in compliance with EMC.
- replace the encoder or encoder cable

© Siemens AG 2012 All Rights Reserved

Reaction upon N: NONE
Acknowl. upon N: NONE
Reaction upon A: NONE
Acknowl. upon A: NONE

F33129 (N, A) Encoder 3: Position difference, hall sensor/track C/D and A/B too large

Message value: %1
Drive object: VECTOR_G
Reaction: OFF1 (IASC/DCBRAKE, NONE, OFF2, OFF3)
Acknowledge: PULSE INHIBIT
Cause: The error for track C/D is greater than +/-15 ° mechanical or +/-60 ° electrical or the error for the Hall signals is greater than +/-60 ° electrical.
One period of track C/D corresponds to 360 ° mechanical.
One period of the Hall signal corresponds to 360 ° electrical.
The monitoring responds if, for example, Hall sensors are connected as equivalent for the C/D tracks with the incorrect rotational sense or supply values that are not accurate enough.
After the fine synchronization using one reference mark or 2 reference marks for distance-coded encoders, this fault is no longer initiated, but instead, Alarm A33429.
Fault value (r0949, interpret decimal):
For track C/D, the following applies:
Measured deviation as mechanical angle (16 bits with sign, 182 dec corresponds to 1 °).
For Hall signals, the following applies:
Measured deviation as electrical angle (16 bits with sign, 182 dec corresponds to 1 °).
Remedy: - track C or D not connected.
- correct the direction of rotation of the Hall sensor possibly connected as equivalent for track C/D.
- check that the encoder cables are routed in compliance with EMC.
- check the adjustment of the Hall sensor.

Reaction upon N: NONE
Acknowl. upon N: NONE
Reaction upon A: NONE
Acknowl. upon A: NONE

F33130 (N, A) Encoder 3: Zero mark and position error from the coarse synchronization

Message value: Angular deviation, electrical: %1, angle, mechanical: %2
Drive object: VECTOR_G
Reaction: OFF1 (IASC/DCBRAKE, NONE, OFF2, OFF3, STOP1, STOP2)
Acknowledge: PULSE INHIBIT
Cause: After initializing the pole position using track C/D, Hall signals or pole position identification routine, the zero mark was detected outside the permissible range. For distance-coded encoders, the test is carried out after passing 2 zero marks. Fine synchronization was not carried out.
When initializing via track C/D (p0404) then it is checked whether the zero mark occurs in an angular range of +/-18 ° mechanical.
When initializing via Hall sensors (p0404) or pole position identification (p1982) it is checked whether the zero mark occurs in an angular range of +/-60 ° electrical.
Fault value (r0949, interpret hexadecimal):
yyyyxxxx hex
yyyy: Determined mechanical zero mark position (can only be used for track C/D).
xxxx: Deviation of the zero mark from the expected position as electrical angle.
Scaling: 32768 dec = 180 °
Remedy: - check that the encoder cables are routed in compliance with EMC.
- check the plug connections
- if the Hall sensor is used as an equivalent for track C/D, check the connection.
- Check the connection of track C or D.
- replace the encoder or encoder cable

Reaction upon N: NONE
Acknowl. upon N: NONE
Reaction upon A: NONE
Acknowl. upon A: NONE

© Siemens AG 2012 All Rights Reserved

F33131 (N, A) Encoder 3: Deviation, position incremental/absolute too large

Message value: %1

Drive object: VECTOR_G

Reaction: OFF1 (IASC/DCBRAKE, NONE, OFF2, OFF3, STOP1, STOP2)

Acknowledge: PULSE INHIBIT

Cause: Absolute encoder:
When cyclically reading the absolute position, an excessively high difference to the incremental position was detected. The absolute position that was read is rejected.
Limit value for the deviation:
- EnDat encoder: Is supplied from the encoder and is a minimum of 2 quadrants (e.g. EQI 1325 > 2 quadrants, EQN 1325 > 50 quadrants).
- other encoders: 15 pulses = 60 quadrants.
Incremental encoder:
When the zero pulse is passed, a deviation in the incremental position was detected.
For equidistant zero marks, the following applies:
- The first zero mark passed supplies the reference point for all subsequent checks. The other zero marks must have n times the distance referred to the first zero mark.
For distance-coded zero marks, the following applies:
- the first zero mark pair supplies the reference point for all subsequent checks. The other zero mark pairs must have the expected distance to the first zero mark pair.
Fault value (r0949, interpret decimal):
Deviation in quadrants (1 pulse = 4 quadrants).

Remedy:
- check that the encoder cables are routed in compliance with EMC.
- check the plug connections
- replace the encoder or encoder cable
- check whether the coding disk is dirty or there are strong ambient magnetic fields.
- adapt the parameter for the clearance between zero marks (p0425).
- if message output above speed threshold, reduce filter time if necessary (p0438).

Reaction upon N: NONE

Acknowl. upon N: NONE

Reaction upon A: NONE

Acknowl. upon A: NONE

F33135 Encoder 3: Fault when determining the position

Message value: Fault cause: %1 bin

Drive object: VECTOR_G

Reaction: OFF1 (IASC/DCBRAKE, NONE, OFF2, OFF3)

Acknowledge: PULSE INHIBIT

Cause: The DRIVE-CLiQ encoder supplies status information via bits in an internal status/fault word.
Some of these bits cause this fault to be triggered. Other bits are status displays. The status/fault word is displayed in the fault value.
Fault value (r0949, interpret binary):
Bit 0: F1 (safety status display)
Bit 1: F2 (safety status display)
Bit 2: Lighting (reserved)
Bit 3: Signal amplitude (reserved)
Bit 4: Position value (reserved)
Bit 5: Overvoltage (reserved)
Bit 6: Undervoltage (reserved)
Bit 7: Overcurrent (reserved)
Bit 8: Battery (reserved)
Bit 16: Lighting (--> F3x135, x = 1, 2, 3)
Bit 17: Signal amplitude (--> F3x135, x = 1, 2, 3)
Bit 18: Singleturn position 1 (--> F3x135, x = 1, 2, 3)
Bit 19: Overvoltage (--> F3x135, x = 1, 2, 3)
Bit 20: Undervoltage (--> F3x135, x = 1, 2, 3)
Bit 21: Overcurrent (--> F3x135, x = 1, 2, 3)
Bit 22: Temperature exceeded (--> F3x405, x = 1, 2, 3)
Bit 23: Singleturn position 2 (safety status display)
Bit 24: Singleturn system (--> F3x135, x = 1, 2, 3)

© Siemens AG 2012 All Rights Reserved

Bit 25: Singleturn power down (--> F3x135, x = 1, 2, 3)
Bit 26: Multiturn position 1 (--> F3x136, x = 1, 2, 3)
Bit 27: Multiturn position 2 (--> F3x136, x = 1, 2, 3)
Bit 28: Multiturn system (--> F3x136, x = 1, 2, 3)
Bit 29: Multiturn power down (--> F3x136, x = 1, 2, 3)
Bit 30: Multiturn overflow/underflow (--> F3x136, x = 1, 2, 3)
Bit 31: Multiturn battery (reserved)

Remedy: Replace DRIVE-CLiQ encoder.

F33136 Encoder 3: Error when determining multiturn information

Message value: Fault cause: %1 bin

Drive object: VECTOR_G

Reaction: OFF1 (IASC/DCBRAKE, NONE, OFF2, OFF3)

Acknowledge: PULSE INHIBIT

Cause: The DRIVE-CLiQ encoder supplies status information via bits in an internal status/fault word.
Some of these bits cause this fault to be triggered. Other bits are status displays. The status/fault word is displayed in the fault value.
Fault value (r0949, interpret binary):
Bit 0: F1 (safety status display)
Bit 1: F2 (safety status display)
Bit 2: Lighting (reserved)
Bit 3: Signal amplitude (reserved)
Bit 4: Position value (reserved)
Bit 5: Overvoltage (reserved)
Bit 6: Undervoltage (reserved)
Bit 7: Overcurrent (reserved)
Bit 8: Battery (reserved)
Bit 16: Lighting (--> F3x135, x = 1, 2, 3)
Bit 17: Signal amplitude (--> F3x135, x = 1, 2, 3)
Bit 18: Singleturn position 1 (--> F3x135, x = 1, 2, 3)
Bit 19: Overvoltage (--> F3x135, x = 1, 2, 3)
Bit 20: Undervoltage (--> F3x135, x = 1, 2, 3)
Bit 21: Overcurrent (--> F3x135, x = 1, 2, 3)
Bit 22: Temperature exceeded (--> F3x405, x = 1, 2, 3)
Bit 23: Singleturn position 2 (safety status display)
Bit 24: Singleturn system (--> F3x135, x = 1, 2, 3)
Bit 25: Singleturn power down (--> F3x135, x = 1, 2, 3)
Bit 26: Multiturn position 1 (--> F3x136, x = 1, 2, 3)
Bit 27: Multiturn position 2 (--> F3x136, x = 1, 2, 3)
Bit 28: Multiturn system (--> F3x136, x = 1, 2, 3)
Bit 29: Multiturn power down (--> F3x136, x = 1, 2, 3)
Bit 30: Multiturn overflow/underflow (--> F3x136, x = 1, 2, 3)
Bit 31: Multiturn battery (reserved)

Remedy: Replace DRIVE-CLiQ encoder.

F33137 Encoder 3: Internal fault when determining the position

Message value: Fault cause: %1 bin

Drive object: VECTOR_G

Reaction: OFF1 (IASC/DCBRAKE, NONE, OFF2, OFF3)

Acknowledge: PULSE INHIBIT

Cause: The DRIVE-CLiQ encoder fault word supplies fault bits that have been set.
Fault value (r0949, interpret binary):
Only for internal Siemens troubleshooting.

Remedy: Replace encoder.

© Siemens AG 2012 All Rights Reserved

F33138 Encoder 3: Internal error when determining multiturn information

Message value: Fault cause: %1 bin
Drive object: VECTOR_G
Reaction: OFF1 (IASC/DCBRAKE, NONE, OFF2, OFF3)
Acknowledge: PULSE INHIBIT
Cause: The DRIVE-CLiQ encoder fault word supplies fault bits that have been set.
Fault value (r0949, interpret binary):
Only for internal SIEMENS troubleshooting.
Remedy: Replace encoder.

F33150 (N, A) Encoder 3: Initialization error

Message value: %1
Drive object: VECTOR_G
Reaction: OFF1 (IASC/DCBRAKE, NONE, OFF2, OFF3, STOP1, STOP2)
Acknowledge: PULSE INHIBIT
Cause: Encoder functionality selected in p0404 is not operating correctly.
Fault value (r0949, interpret hexadecimal):
Encoder malfunction.
The bit assignment corresponds to that of p0404 (e.g. bit 5 set: Error track C/D).
Remedy: - Check that p0404 is correctly set.
- check the encoder type used (incremental/absolute) and for SMCxx, the encoder cable.
- if relevant, note additional fault messages that describe the fault in detail.
Reaction upon N: NONE
Acknowl. upon N: NONE
Reaction upon A: NONE
Acknowl. upon A: NONE

F33151 (N, A) Encoder 3: Encoder speed for initialization AB too high

Message value: %1
Drive object: VECTOR_G
Reaction: ENCODER (IASC/DCBRAKE, NONE, OFF1, OFF2, OFF3, STOP1, STOP2)
Acknowledge: PULSE INHIBIT
Cause: The encoder speed is too high during while initializing the sensor.
Remedy: Reduce the speed of the encoder accordingly during initialization.
If necessary, de-activate monitoring (p0437.29).
See also: p0437 (Sensor Module configuration extended)
Reaction upon N: NONE
Acknowl. upon N: NONE
Reaction upon A: NONE
Acknowl. upon A: NONE

F33152 (N, A) Encoder 3: Maximum input frequency exceeded

Message value: %1
Drive object: VECTOR_G
Reaction: ENCODER (IASC/DCBRAKE, NONE, OFF1, OFF2, OFF3, STOP1, STOP2)
Acknowledge: PULSE INHIBIT
Cause: The maximum input frequency of the encoder evaluation has been exceeded.
Fault value (r0949, interpret decimal):
Actual input frequency in Hz.
See also: p0408 (Rotary encoder pulse No.)
Remedy: - Reduce the speed.
- Use an encoder with a lower pulse number (p0408).
Reaction upon N: NONE
Acknowl. upon N: NONE

© Siemens AG 2012 All Rights Reserved

Reaction upon A: NONE
Acknowl. upon A: NONE

F33160 (N, A) Encoder 3: Analog sensor channel A failed

Message value: %1
Drive object: VECTOR_G
Reaction: ENCODER (IASC/DCBRAKE, NONE)
Acknowledge: PULSE INHIBIT
Cause: The input voltage of the analog sensor is outside the permissible limits.
Fault value (r0949, interpret decimal):
1: Input voltage outside detectable measuring range.
2: Input voltage outside the measuring range set in (p4673).
3: The absolute value of the input voltage has exceeded the range limit (p4676).
Remedy: For fault value = 1:
- check the output voltage of the analog sensor.
For fault value = 2:
- check the voltage setting for each encoder period (p4673).
For fault value = 3:
- check the range limit setting and increase it if necessary (p4676).
Reaction upon N: NONE
Acknowl. upon N: NONE
Reaction upon A: NONE
Acknowl. upon A: NONE

F33161 (N, A) Encoder 3: Analog sensor channel B failed

Message value: %1
Drive object: VECTOR_G
Reaction: ENCODER (IASC/DCBRAKE, NONE)
Acknowledge: PULSE INHIBIT
Cause: The input voltage of the analog sensor is outside the permissible limits.
Fault value (r0949, interpret decimal):
1: Input voltage outside detectable measuring range.
2: Input voltage outside the measuring range set in (p4675).
3: The absolute value of the input voltage has exceeded the range limit (p4676).
Remedy: For fault value = 1:
- check the output voltage of the analog sensor.
For fault value = 2:
- check the voltage setting for each encoder period (p4675).
For fault value = 3:
- check the range limit setting and increase it if necessary (p4676).
Reaction upon N: NONE
Acknowl. upon N: NONE
Reaction upon A: NONE
Acknowl. upon A: NONE

F33163 (N, A) Encoder 3: Analog sensor position value exceeds limit value

Message value: %1
Drive object: VECTOR_G
Reaction: ENCODER (IASC/DCBRAKE, NONE)
Acknowledge: PULSE INHIBIT
Cause: The position value has exceeded the permissible range of -0.5 ... +0.5.
Fault value (r0949, interpret decimal):
1: Position value from the LVDT sensor.
2: Position value from the encoder characteristic.

© Siemens AG 2012 All Rights Reserved

Remedy: For fault value = 1:
- Check the LVDT ratio (p4678).
- check the reference signal connection at track B.
For fault value = 2:
- check the coefficients of the characteristic (p4663 ... p4666).

Reaction upon N: NONE
Acknowl. upon N: NONE
Reaction upon A: NONE
Acknowl. upon A: NONE

A33400 (F, N) Encoder 3: Alarm threshold zero mark distance error

Message value: %1
Drive object: VECTOR_G
Reaction: NONE
Acknowledge: NONE
Cause: The measured zero mark distance does not correspond to the parameterized zero mark distance.
For distance-coded encoders, the zero mark distance is determined from zero marks detected pairs. This means that if a zero mark is missing, depending on the pair generation, this cannot result in a fault and also has no effect in the system.
The zero mark distance for the zero mark monitoring is set in p0425 (rotary encoder) or p0424 (linear encoder).
Alarm value (r2124, interpret decimal):
Last measured zero mark distance in increments (4 increments = 1 encoder pulse).
The sign designates the direction of motion when detecting the zero mark distance.
Remedy: - check that the encoder cables are routed in compliance with EMC.
- check the plug connections
. check the encoder type (encoder with equidistant zero marks).
- adapt the parameter for the distance between zero marks (p0424, p0425).
- replace the encoder or encoder cable

Reaction upon F: NONE (IASC/DCBRAKE, OFF1, OFF2, OFF3, STOP1, STOP2)
Acknowl. upon F: IMMEDIATELY
Reaction upon N: NONE
Acknowl. upon N: NONE

A33401 (F, N) Encoder 3: Alarm threshold zero mark failed

Message value: %1
Drive object: VECTOR_G
Reaction: NONE
Acknowledge: NONE
Cause: The 1.5 x parameterized zero mark distance was exceeded.
The zero mark distance for the zero mark monitoring is set in p0425 (rotary encoder) or p0424 (linear encoder).
Alarm value (r2124, interpret decimal):
Number of increments after POWER ON or since the last zero mark that was detected (4 increments = 1 encoder pulse).
Remedy: - check that the encoder cables are routed in compliance with EMC.
- check the plug connections
. check the encoder type (encoder with equidistant zero marks).
- adapt the parameter for the clearance between zero marks (p0425).
- replace the encoder or encoder cable

Reaction upon F: NONE (IASC/DCBRAKE, OFF1, OFF2, OFF3, STOP1, STOP2)
Acknowl. upon F: IMMEDIATELY
Reaction upon N: NONE
Acknowl. upon N: NONE

© Siemens AG 2012 All Rights Reserved

F33405 (N, A) Encoder 3: Temperature in the encoder evaluation inadmissible

Message value: %1
Drive object: VECTOR_G
Reaction: ENCODER (IASC/DCBRAKE, NONE, OFF1, OFF2, OFF3, STOP1, STOP2)
Acknowledge: IMMEDIATELY (POWER ON)
Cause: The encoder evaluation for a motor with DRIVE-CLiQ has detected an inadmissible temperature.
The fault threshold is 125 ° C.
Alarm value (r2124, interpret decimal):
Measured board/module temperature in 0.1 °C.
Remedy: Reduce the ambient temperature for the DRIVE-CLiQ connection of the motor.
Reaction upon N: NONE
Acknowl. upon N: NONE
Reaction upon A: NONE
Acknowl. upon A: NONE

A33407 (F, N) Encoder 3: Function limit reached

Message value: %1
Drive object: VECTOR_G
Reaction: NONE
Acknowledge: NONE
Cause: The encoder has reached one of its function limits. A service is recommended.
Alarm value (r2124, interpret decimal):
1 : Incremental signals
3 : Absolute track
4 : Code connection
Remedy: Perform service. Replace the encoder if necessary.
Note:
The actual functional reserve of an encoder can be displayed via r4651.
See also: p4650 (Encoder functional reserve component number), r4651 (Encoder functional reserve)
Reaction upon F: NONE (ENCODER, IASC/DCBRAKE, OFF1, OFF2, OFF3, STOP1, STOP2)
Acknowl. upon F: IMMEDIATELY
Reaction upon N: NONE
Acknowl. upon N: NONE

A33410 (F, N) Encoder 3: Serial communications

Message value: Fault cause: %1 bin
Drive object: VECTOR_G
Reaction: NONE
Acknowledge: NONE
Cause: Serial communication protocol transfer error between the encoder and evaluation module.
Alarm value (r2124, interpret binary):
Bit 0: Alarm bit in the position protocol.
Bit 1: Incorrect quiescent level on the data line.
Bit 2: Encoder does not respond (does not supply a start bit within 50 ms).
Bit 3: CRC error: The checksum in the protocol from the encoder does not match the data.
Bit 4: Encoder acknowledgement error: The encoder incorrectly understood the task (request) or cannot execute it.
Bit 5: Internal error in the serial driver: An illegal mode command was requested.
Bit 6: Timeout when cyclically reading.
Bit 8: Protocol is too long (e.g. > 64 bits).
Bit 9: Receive buffer overflow.
Bit 10: Frame error when reading twice.
Bit 11: Parity error.
Bit 12: Data line signal level error during the monoflop time.
Remedy: - check that the encoder cables are routed in compliance with EMC.
- check the plug connections
- replace encoder.

© Siemens AG 2012 All Rights Reserved

Reaction upon F: NONE (IASC/DCBRAKE, OFF1, OFF2, OFF3, STOP1, STOP2)
Acknowl. upon F: IMMEDIATELY
Reaction upon N: NONE
Acknowl. upon N: NONE

A33411 (F, N) Encoder 3: Absolute encoder signals internal alarms

Message value: Fault cause: %1 bin, additional information: %2
Drive object: VECTOR_G
Reaction: NONE
Acknowledge: NONE
Cause: The absolute encoder fault word includes alarm bits that have been set.
Alarm value (r2124, interpret binary):
yyyyxxxx hex: yyyy = supplementary information, xxxx = fault cause
yyyy = 0:
Bit 0: Frequency exceeded (speed too high).
Bit 1: Temperature exceeded.
Bit 2: Control reserve, lighting system exceeded.
Bit 3: Battery discharged.
Bit 4: Reference point passed.
yyyy = 1:
Bit 0: Signal amplitude outside the control range.
Bit 1: Error multiturn interface
Bit 2: Internal data error (singleturn/multiturn not with single steps).
Bit 3: Error EEPROM interface.
Bit 4: SAR converter error.
Bit 5: Fault for the register data transfer.
Bit 6: Internal error identified at the error pin (nErr).
Bit 7: Temperature threshold exceeded or fallen below.
Remedy: Replace encoder.
Reaction upon F: NONE (IASC/DCBRAKE, OFF1, OFF2, OFF3, STOP1, STOP2)
Acknowl. upon F: IMMEDIATELY
Reaction upon N: NONE
Acknowl. upon N: NONE

A33412 (F, N) Encoder 3: Error bit set in the serial protocol

Message value: %1
Drive object: VECTOR_G
Reaction: NONE
Acknowledge: NONE
Cause: The encoder sends a set error bit via the serial protocol.
Alarm value (r2124, interpret binary):
Bit 0: Fault bit in the position protocol.
Bit 1: Alarm bit in the position protocol.
Remedy: - carry out a POWER ON (power off/on) for all components.
- check that the encoder cables are routed in compliance with EMC.
- check the plug connections
- replace encoder.
Reaction upon F: NONE (IASC/DCBRAKE, OFF1, OFF2, OFF3, STOP1, STOP2)
Acknowl. upon F: IMMEDIATELY
Reaction upon N: NONE
Acknowl. upon N: NONE

© Siemens AG 2012 All Rights Reserved

A33414 (F, N) Encoder 3: Amplitude error track C or D (C^2 + D^2)

Message value: C track: %1, D track: %2

Drive object: VECTOR_G

Reaction: NONE

Acknowledge: NONE

Cause: The amplitude (C^2 + D^2) of track C or D of the encoder or from the Hall signals, is not within the tolerance bandwidth.
Alarm value (r2124, interpret hexadecimal):
yyyyxxxx hex:
yyyy = Signal level, track D (16 bits with sign).
xxxx = Signal level, track C (16 bits with sign).
The nominal signal level of the encoder must lie in the range 375 mV to 600 mV (500 mV -25/+20 %).
The response thresholds are < 230 mV (observe the frequency response of the encoder) and > 750 mV.
A signal level of 500 mV peak value corresponds to the numerical value 5333 hex = 21299 dec.
Note:
If the amplitude is not within the tolerance bandwidth, then it cannot be used to initialize the start position.

Remedy: - check that the encoder cables are routed in compliance with EMC.
- check the plug connections
- replace the encoder or encoder cable
- check the Sensor Module (e.g. contacts).
- check the Hall sensor box

Reaction upon F: NONE (IASC/DCBRAKE, OFF1, OFF2, OFF3, STOP1, STOP2)

Acknowl. upon F: IMMEDIATELY

Reaction upon N: NONE

Acknowl. upon N: NONE

A33415 (F, N) Encoder 3: Amplitude alarm track A or B (A^2 + B^2)

Message value: Amplitude: %1, Angle: %2

Drive object: VECTOR_G

Reaction: NONE

Acknowledge: NONE

Cause: The amplitude (root of A^2 + B^2) for encoder 3 exceeds the permissible tolerance.
Alarm value (r2124, interpret hexadecimal):
yyyyxxxx hex:
yyyy = Angle
xxxx = Amplitude, i.e. root from A^2 + B^2 (16 bits without sign)
The nominal signal level of the encoder must lie in the range 375 mV to 600 mV (500 mV -25/+20 %).
The response threshold is < 230 mV (observe the frequency response of the encoder).
A signal level of 500 mV peak value corresponds to the numerical value 299A hex = 10650 dec.
The angle 0 ... FFFF hex corresponds to 0 ... 360 degrees of the fine position. Zero degrees is present at the negative zero crossover of track B.
Note for sensors modules for resolvers (e. g. SMC10):
The nominal signal level is at 2900 mV (2.0 Vrms). The response threshold is < 1414 mV (1.0 Vrms).
A signal level of 2900 mV peak value corresponds to the numerical value 3333 hex = 13107 dec.
Note:
The analog values of the amplitude error are not measured at the same time with the hardware fault output by the Sensor Module.

Remedy: - check the speed range, frequency characteristic (amplitude characteristic) of the measuring equipment is not sufficient for the speed range.
- check that the encoder cables and shielding are routed in compliance with EMC.
- check the plug connections
- replace the encoder or encoder cable
- check the Sensor Module (e.g. contacts).
- if the coding disk is soiled or the lighting aged, replace the encoder.

Reaction upon F: NONE (IASC/DCBRAKE, OFF1, OFF2, OFF3, STOP1, STOP2)

Acknowl. upon F: IMMEDIATELY

Reaction upon N: NONE

Acknowl. upon N: NONE

© Siemens AG 2012 All Rights Reserved

A33418 (F, N) Encoder 3: Speed difference per sampling rate exceeded

Message value: %1
Drive object: VECTOR_G
Reaction: NONE
Acknowledge: NONE
Cause: For an HTL/TTL encoder, the speed difference between two sampling cycles has exceeded the value in p0492.
The change to the averaged speed actual value - if applicable - is monitored in the current controller sampling time.
Alarm value (r2124, interpret decimal):
Only for internal Siemens troubleshooting.
See also: p0492
Remedy: - check the tachometer feeder cable for interruptions.
- check the grounding of the tachometer shielding.
- if required, increase the setting of p0492.
Reaction upon F: NONE (IASC/DCBRAKE, OFF1, OFF2, OFF3, STOP1, STOP2)
Acknowl. upon F: IMMEDIATELY
Reaction upon N: NONE
Acknowl. upon N: NONE

A33419 (F, N) Encoder 3: Track A or B outside tolerance

Message value: %1
Drive object: VECTOR_G
Reaction: NONE
Acknowledge: NONE
Cause: The amplitude/phase/offset correction for track A or B is at the limit.
Amplitude error correction: Amplitude B / Amplitude A = 0.78 ... 1.27
Phase: <84 degrees or >96 degrees
SMC20: Offset correction: +/-140 mV
SMC10: Offset correction: +/-650 mV
Alarm value (r2124, interpret hexadecimal):
xxxx1: Minimum of the offset correction, track B
xxxx2: Maximum of the offset correction, track B
xxx1x: Minimum of the offset correction, track A
xxx2x: Maximum of the offset correction, track A
xx1xx: Minimum of the amplitude correction, track B/A
xx2xx: Maximum of the amplitude correction, track B/A
x1xxx: Minimum of the phase error correction
x2xxx: Maximum of the phase error correction
1xxxx: Minimum of the cubic correction
2xxxx: Maximum of the cubic correction
Remedy: - check mechanical mounting tolerances for encoders without their own bearings (e.g. toothed-wheel encoders).
- check the plug connections (also the transition resistance).
- check the encoder signals.
- replace the encoder or encoder cable
Reaction upon F: NONE (IASC/DCBRAKE, OFF1, OFF2, OFF3, STOP1, STOP2)
Acknowl. upon F: IMMEDIATELY
Reaction upon N: NONE
Acknowl. upon N: NONE

A33421 (F, N) Encoder 3: Coarse position error

Message value: %1
Drive object: VECTOR_G
Reaction: NONE
Acknowledge: NONE
Cause: For the actual value sensing, an error was detected. As a result of this error, it must be assumed that the actual value sensing supplies an incorrect coarse position.

© Siemens AG 2012 All Rights Reserved

Alarm value (r2124, interpret decimal):
3: The absolute position of the serial protocol and track A/B differ by half an encoder pulse. The absolute position must have its zero position in the quadrants in which both tracks are negative. In the case of a fault, the position can be incorrect by one encoder pulse.

Remedy: Re alarm value = 3:
- For a standard encoder with cable, contact the manufacturer where relevant.
- correct the assignment of the tracks to the position value that is serially transferred. To do this, the two tracks must be connected, inverted, at the Sensor Module (interchange A with A* and B with B*) or, for a programmable encoder, check the zero offset of the position.

Reaction upon F: NONE (IASC/DCBRAKE, OFF1, OFF2, OFF3, STOP1, STOP2)
Acknowl. upon F: IMMEDIATELY
Reaction upon N: NONE
Acknowl. upon N: NONE

A33422 (F, N) Encoder 3: Pulses per revolution square-wave encoder outside tolerance bandwidth

Message value: %1
Drive object: VECTOR_G
Reaction: NONE
Acknowledge: NONE
Cause: The measured zero mark distance does not correspond to the parameterized zero mark distance.
This alarm is triggered with active square-wave encoder PPR correction and re-parameterized fault 31131 if the accumulator contains larger values than p4683 or p4684.
The zero mark distance for zero mark monitoring is set in p0425 (rotary encoder).
Alarm value (r2124, interpret decimal):
accumulated differential pulses in encoder pulses.

Remedy:
- check that the encoder cables are routed in compliance with EMC.
- check the plug connections
. check the encoder type (encoder with equidistant zero marks).
- adapt the parameter for the distance between zero marks (p0424, p0425).
- replace the encoder or encoder cable

Reaction upon F: NONE (IASC/DCBRAKE, OFF1, OFF2, OFF3, STOP1, STOP2)
Acknowl. upon F: IMMEDIATELY
Reaction upon N: NONE
Acknowl. upon N: NONE

A33429 (F, N) Encoder 3: Position difference, hall sensor/track C/D and A/B too large

Message value: %1
Drive object: VECTOR_G
Reaction: NONE
Acknowledge: NONE
Cause: The error for track C/D is greater than +/-15 ° mechanical or +/-60 ° electrical or the error for the Hall signals is greater than +/-60 ° electrical.
One period of track C/D corresponds to 360 ° mechanical.
One period of the Hall signal corresponds to 360 ° electrical.
The monitoring responds if, for example, Hall sensors are connected as equivalent for the C/D tracks with the incorrect rotational sense or supply values that are not accurate enough.
Alarm value (r2124, interpret decimal):
For track C/D, the following applies:
Measured deviation as mechanical angle (16 bits with sign, 182 dec corresponds to 1 °).
For Hall signals, the following applies:
Measured deviation as electrical angle (16 bits with sign, 182 dec corresponds to 1 °).

Remedy:
- track C or D not connected.
- correct the direction of rotation of the Hall sensor possibly connected as equivalent for track C/D.
- check that the encoder cables are routed in compliance with EMC.
- check the adjustment of the Hall sensor.

Reaction upon F: NONE (IASC/DCBRAKE, OFF1, OFF2, OFF3, STOP1, STOP2)
Acknowl. upon F: IMMEDIATELY

© Siemens AG 2012 All Rights Reserved

Reaction upon N: NONE
Acknowl. upon N: NONE

A33431 (F, N) Encoder 3: Deviation, position incremental/absolute too large

Message value: %1
Drive object: VECTOR_G
Reaction: NONE
Acknowledge: NONE
Cause: When the zero pulse is passed, a deviation in the incremental position was detected.
For equidistant zero marks, the following applies:
- The first zero mark passed supplies the reference point for all subsequent checks. The other zero marks must have n times the distance referred to the first zero mark.
For distance-coded zero marks, the following applies:
- the first zero mark pair supplies the reference point for all subsequent checks. The other zero mark pairs must have the expected distance to the first zero mark pair.
Alarm value (r2124, interpret decimal):
Deviation in quadrants (1 pulse = 4 quadrants).
Remedy: - check that the encoder cables are routed in compliance with EMC.
- check the plug connections
- replace the encoder or encoder cable
- Clean coding disk or remove strong magnetic fields.
Reaction upon F: NONE (IASC/DCBRAKE, OFF1, OFF2, OFF3, STOP1, STOP2)
Acknowl. upon F: IMMEDIATELY
Reaction upon N: NONE
Acknowl. upon N: NONE

A33432 (F, N) Encoder 3: Rotor position adaptation corrects deviation

Message value: %1
Drive object: VECTOR_G
Reaction: NONE
Acknowledge: NONE
Cause: For track A/B, pulses have been lost or too many have been counted. These pulses are presently being corrected.
Alarm value (r2124, interpret decimal):
Last measured deviation of zero mark in increments (4 increments = 1 encoder pulse).
The sign designates the direction of motion when detecting the zero mark distance.
Remedy: - check that the encoder cables are routed in compliance with EMC.
- check the plug connections
- replace the encoder or encoder cable
- check encoder limit frequency.
- adapt the parameter for the distance between zero marks (p0424, p0425).
Reaction upon F: NONE (ENCODER, IASC/DCBRAKE, OFF1, OFF2, OFF3, STOP1, STOP2)
Acknowl. upon F: IMMEDIATELY
Reaction upon N: NONE
Acknowl. upon N: NONE

A33442 (F, N) Encoder 3: Battery voltage pre-alarm

Message value: -
Drive object: VECTOR_G
Reaction: NONE
Acknowledge: NONE
Cause: When switched-off, the encoder uses a battery to back up the multiturn information. The battery voltage is no longer sufficient to check the multiturn information.
Remedy: Replace battery.
Reaction upon F: NONE (ENCODER, IASC/DCBRAKE, OFF1, OFF2, OFF3, STOP1, STOP2)
Acknowl. upon F: IMMEDIATELY
Reaction upon N: NONE
Acknowl. upon N: NONE

© Siemens AG 2012 All Rights Reserved

A33443 (F, N) Encoder 3: Unipolar CD signal level outside specification

Message value: Fault cause: %1 bin

Drive object: VECTOR_G

Reaction: NONE

Acknowledge: NONE

Cause: The unipolar level (CP/CN or DP/DN) for encoder 3 is outside the permissible tolerance.
Alarm value (r2124, interpret binary):
Bit 0 = 1: Either CP or CN outside the tolerance.
Bit 16 = 1: Either DP or DN outside the tolerance.
The unipolar nominal signal level of the encoder must lie in the range 2500 mV +/- 500 mV.
The response thresholds are < 1700 mV and > 3300 mV.
Note:
The signal level is not evaluated unless the following conditions are satisfied:
- Sensor Module properties available (r0459.31 = 1).
- Monitoring active (p0437.31 = 1).

Remedy: - check that the encoder cables and shielding are routed in compliance with EMC.
- check the plug connections and contacts of the encoder cable.
- are the C/D tracks connected correctly (have the signal lines CP and CN or DP and DN been interchanged)?
- replace the encoder cable.

Reaction upon F: NONE (IASC/DCBRAKE, OFF1, OFF2, OFF3, STOP1, STOP2)

Acknowl. upon F: IMMEDIATELY

Reaction upon N: NONE

Acknowl. upon N: NONE

A33460 (N) Encoder 3: Analog sensor channel A failed

Message value: %1

Drive object: VECTOR_G

Reaction: NONE

Acknowledge: NONE

Cause: The input voltage of the analog sensor is outside the permissible limits.
Alarm value (r2124, interpret decimal):
1: Input voltage outside detectable measuring range.
2: Input voltage outside measuring range set in p4673.
3: The absolute value of the input voltage has exceeded the range limit (p4676).

Remedy: Re alarm value = 1:
- check the output voltage of the analog sensor.
Re alarm value = 2:
- check the voltage setting for each encoder period (p4673).
Re alarm value = 3:
- check the range limit setting and increase it if necessary (p4676).

Reaction upon N: NONE

Acknowl. upon N: NONE

A33461 (N) Encoder 3: Analog sensor channel B failed

Message value: %1

Drive object: VECTOR_G

Reaction: NONE

Acknowledge: NONE

Cause: The input voltage of the analog sensor is outside the permissible limits.
Alarm value (r2124, interpret decimal):
1: Input voltage outside detectable measuring range.
2: Input voltage outside the measuring range set in (p4675).
3: The absolute value of the input voltage has exceeded the range limit (p4676).

Remedy: Re alarm value = 1:
- check the output voltage of the analog sensor.
Re alarm value = 2:
- check the voltage setting for each encoder period (p4675).

© Siemens AG 2012 All Rights Reserved

Re alarm value = 3:
- check the range limit setting and increase it if necessary (p4676).

Reaction upon N: NONE
Acknowl. upon N: NONE

A33462 (N) Encoder 3: Analog sensor, no channel active

Message value: %1
Drive object: VECTOR_G
Reaction: NONE
Acknowledge: NONE
Cause: Channel A and B are not activated for the analog sensor.
Remedy: - activate channel A and/or channel B (p4670).
- check the encoder configuration (p0404.17).
See also: p4670 (Analog sensor configuration)

Reaction upon N: NONE
Acknowl. upon N: NONE

A33463 (N) Encoder 3: Analog sensor position value exceeds limit value

Message value: %1
Drive object: VECTOR_G
Reaction: NONE
Acknowledge: NONE
Cause: The position value has exceeded the permissible range of -0.5 ... +0.5.
Alarm value (r2124, interpret decimal):
1: Position value from the LVDT sensor.
2: Position value from the encoder characteristic.
Remedy: Re alarm value = 1:
- Check the LVDT ratio (p4678).
- check the reference signal connection at track B.
Re alarm value = 2:
- check the coefficients of the characteristic (p4663 ... p4666).

Reaction upon N: NONE
Acknowl. upon N: NONE

A33470 (F, N) Encoder 3: Soiling detected

Message value: -
Drive object: VECTOR_G
Reaction: NONE
Acknowledge: NONE
Cause: In the case of the alternative encoder system interface on the Sensor Module Cabinet 30 (SMC30), encoder soiling is signaled via a 0 signal at terminal X521.7.
Remedy: - check the plug connections
- replace the encoder or encoder cable

Reaction upon F: NONE (IASC/DCBRAKE, OFF1, OFF2, OFF3, STOP1, STOP2)
Acknowl. upon F: IMMEDIATELY
Reaction upon N: NONE
Acknowl. upon N: NONE

F33500 (N, A) Encoder 3: Position tracking traversing range exceeded

Message value: -
Drive object: VECTOR_G
Reaction: OFF1 (NONE, OFF2, OFF3)
Acknowledge: IMMEDIATELY
Cause: For a configured linear axis without modulo correction, the drive/encoder has exceeded the maximum possible traversing range. The value should be read in p0412 and interpreted as the number of motor revolutions.

© Siemens AG 2012 All Rights Reserved

For p0411.0 = 1, the maximum traversing range for the configured linear axis is defined to be 64x (+/- 32x) of p0421.
For p0411.3 = 1, the maximum traversing range for the configured linear axis is pre-set (default value) to the highest possible value and is +/-p0412/2 (rounded off to complete revolutions). The highest possible value depends on the pulse number (p0408) and the fine resolution (p0419).

Remedy: The fault should be resolved as follows:
- select encoder commissioning (p0010 = 4).
- reset the position tracking as follows (p0411.2 = 1).
- de-select encoder commissioning (p0010 = 0).

The fault should then be acknowledged and the absolute encoder adjusted.

Reaction upon N: NONE
Acknowl. upon N: NONE
Reaction upon A: NONE
Acknowl. upon A: NONE

F33501 (N, A) Encoder 3: Position tracking encoder position outside tolerance window

Message value: %1
Drive object: VECTOR_G
Reaction: OFF1 (NONE, OFF2, OFF3)
Acknowledge: IMMEDIATELY
Cause: When powered down, the drive/encoder was moved through a distance greater than was parameterized in the tolerance window. It is possible that there is no longer any reference between the mechanical system and encoder.
Fault value (r0949, interpret decimal):
Deviation (difference) to the last encoder position in increments of the absolute value.
The sign designates the traversing direction.
Note:
The deviation (difference) found is also displayed in r0477.
See also: p0413 (Measuring gear, position tracking tolerance window), r0477 (Measuring gear, position difference)

Remedy: Reset the position tracking as follows:
- select encoder commissioning (p0010 = 4).
- reset the position tracking as follows (p0411.2 = 1).
- de-select encoder commissioning (p0010 = 0).

The fault should then be acknowledged and, if necessary, the absolute encoder adjusted (p2507).
See also: p0010

Reaction upon N: NONE
Acknowl. upon N: NONE
Reaction upon A: NONE
Acknowl. upon A: NONE

F33502 (N, A) Encoder 3: Encoder with measuring gear, without valid signals

Message value: -
Drive object: VECTOR_G
Reaction: OFF1 (OFF2, OFF3)
Acknowledge: IMMEDIATELY
Cause: The encoder with measuring gear no longer provides any valid signals.
Remedy: It must be ensured that all of the encoders, with mounted measuring gear, provide valid actual values in operation.
Reaction upon N: NONE
Acknowl. upon N: NONE
Reaction upon A: NONE
Acknowl. upon A: NONE

F33503 (N, A) Encoder 3: Position tracking cannot be reset

Message value: -
Drive object: VECTOR_G
Reaction: OFF1 (NONE, OFF2, OFF3)
Acknowledge: IMMEDIATELY
Cause: The position tracking for the measuring gear cannot be reset.

© Siemens AG 2012 All Rights Reserved

Remedy: The fault should be resolved as follows:
- select encoder commissioning (p0010 = 4).
- reset the position tracking as follows (p0411.2 = 1).
- de-select encoder commissioning (p0010 = 0).
The fault should then be acknowledged and the absolute encoder adjusted.

Reaction upon N: NONE
Acknowl. upon N: NONE
Reaction upon A: NONE
Acknowl. upon A: NONE

A33700 Encoder 3: Effectivity test does not supply the expected value

Message value: Fault cause: %1 bin
Drive object: VECTOR_G
Reaction: NONE
Acknowledge: NONE
Cause: The DRIVE-CLiQ encoder fault word supplies fault bits that have been set.
Fault value (r0949, interpret binary):
Bit x = 1: Effectivity test x unsuccessful.
Remedy: Replace encoder.

N33800 (F) Encoder 3: Group signal

Message value: -
Drive object: VECTOR_G
Reaction: OFF1 (IASC/DCBRAKE, NONE, OFF2, OFF3)
Acknowledge: NONE
Cause: The motor encoder has detected at least one fault.
Remedy: Evaluate the other messages that are presently available.
Reaction upon F: OFF1 (IASC/DCBRAKE, NONE, OFF2, OFF3)
Acknowl. upon F: IMMEDIATELY

F33801 (N, A) Encoder 3 DRIVE-CLiQ: Sign-of-life missing

Message value: Component number: %1, fault cause: %2
Drive object: VECTOR_G
Reaction: OFF1 (IASC/DCBRAKE, NONE, OFF2, OFF3)
Acknowledge: IMMEDIATELY
Cause: A DRIVE-CLiQ communication error has occurred from the Control Unit to the encoder involved.
Fault cause:
10 (= 0A hex):
The sign-of-life bit in the receive telegram is not set.
Note regarding the message value:
The individual information is coded as follows in the message value (r0949/r2124):
0000yyxx hex: yy = component number, xx = error cause
Remedy: - check the electrical cabinet design and cable routing for EMC compliance
- replace the component involved.
See also: p9916 (DRIVE-CLiQ data transfer error shutdown threshold slave)

Reaction upon N: NONE
Acknowl. upon N: NONE
Reaction upon A: NONE
Acknowl. upon A: NONE

F33802 (N, A) Encoder 3: Time slice overflow

Message value: %1
Drive object: VECTOR_G
Reaction: OFF1 (IASC/DCBRAKE, NONE, OFF2, OFF3)
Acknowledge: IMMEDIATELY
Cause: A time slice overflow has occurred in encoder 3.

© Siemens AG 2012 All Rights Reserved

Fault value (r0949, interpret hexadecimal):
yx hex: y = function involved (Siemens-internal fault diagnostics), x = time slice involved
x = 9:
Time slice overflow of the fast (current controller clock cycle) time slice.
x = A:
Time slice overflow of the average time slice.
x = C:
Time slice overflow of the slow time slice.
yx = 3E7:
Timeout when waiting for SYNO (e.g. unexpected return to non-cyclic operation).

Remedy: Increase the current controller sampling time
Note:
For a current controller sampling time = 31.25 µs, use an SMx20 with order number 6SL3055-0AA00-5xA3.

Reaction upon N: NONE
Acknowl. upon N: NONE
Reaction upon A: NONE
Acknowl. upon A: NONE

F33804 (N, A) Encoder 3: Checksum error

Message value: %1
Drive object: VECTOR_G
Reaction: OFF1 (IASC/DCBRAKE, NONE, OFF2, OFF3)
Acknowledge: POWER ON (IMMEDIATELY)
Cause: A checksum error has occurred when reading-out the program memory on the Sensor Module.
Fault value (r0949, interpret hexadecimal):
yyyyxxxx hex
yyyy: Memory area involved.
xxxx: Difference between the checksum at POWER ON and the actual checksum.
Remedy: - carry out a POWER ON (power off/on).
- upgrade firmware to later version (>= V2.6 HF3, >= V4.3 SP2, >= V4.4).
- check whether the permissible ambient temperature for the component is maintained.
- replace the Sensor Module.

Reaction upon N: NONE
Acknowl. upon N: NONE
Reaction upon A: NONE
Acknowl. upon A: NONE

F33805 (N, A) Encoder 3: EPROM checksum error

Message value: %1
Drive object: VECTOR_G
Reaction: OFF1 (IASC/DCBRAKE, NONE, OFF2, OFF3)
Acknowledge: IMMEDIATELY
Cause: Internal parameter data is corrupted.
Fault value (r0949, interpret hexadecimal):
01: EEPROM access error.
02: Too many blocks in the EEPROM.
Remedy: Replace the module.

Reaction upon N: NONE
Acknowl. upon N: NONE
Reaction upon A: NONE
Acknowl. upon A: NONE

© Siemens AG 2012 All Rights Reserved

F33806 (N, A) Encoder 3: Initialization error

Message value: %1

Drive object: VECTOR_G

Reaction: OFF1 (IASC/DCBRAKE, NONE, OFF2, OFF3)

Acknowledge: PULSE INHIBIT

Cause: The encoder was not successfully initialized.
Fault value (r0949, interpret hexadecimal):
Bit 0, 1: Encoder initialization with the motor rotating has failed (deviation involving coarse and fine position in encoder pulses/4).
Bit 2: Mid-voltage matching for track A unsuccessful.
Bit 3: Mid-voltage matching for track B unsuccessful.
Bit 4: Mid-voltage matching for acceleration input unsuccessful.
Bit 5: Mid-voltage matching for track safety A unsuccessful.
Bit 6: Mid-voltage matching for track safety B unsuccessful.
Bit 7: Mid-voltage matching for track C unsuccessful.
Bit 8: Mid-voltage matching for track D unsuccessful.
Bit 9: Mid-voltage matching for track R unsuccessful.
Bit 10: The difference in mid-voltages between A and B is too great (> 0.5 V)
Bit 11: The difference in mid-voltages between C and D is too great (> 0.5 V)
Bit 12: The difference in mid-voltages between safety A and safety B is too great (> 0.5 V)
Bit 13: The difference in mid-voltages between A and safety B is too great (> 0.5 V)
Bit 14: The difference in mid-voltages between B and safety A is too great (> 0.5 V)
Bit 15: The standard deviation of the calculated mid-voltages is too great (> 0.3 V)
Bit 16: Internal fault - fault when reading a register (CAFE)
Bit 17: Internal fault - fault when writing a register (CAFE)
Bit 18: Internal fault: No mid-voltage matching available
Bit 19: Internal error - ADC access error.
Bit 20: Internal error - no zero crossover found.
Bit 28: Error while initializing the EnDat 2.2 measuring unit.
Bit 29: Error when reading out the data from the EnDat 2.2 measuring unit.
Bit 30: EEPROM checksum of the EnDat 2.2 measuring unit incorrect.
Bit 31: Data of the EnDat 2.2 measuring unit inconsistent.
Note:
Bit 0, 1: Up to 6SL3055-0AA00-5*A0
Bits 2 ... 20: 6SL3055-0AA00-5*A1 and higher

Remedy: Acknowledge fault.
If the fault cannot be acknowledged:
Bits 2 ... 9: Check encoder power supply.
Bits 2 ... 14: Check the corresponding cable.
Bit 15 with no other bits: Check track R, check settings in p0404.
Bit 28: Check the cable between the EnDat 2.2 converter and the measuring unit.
Bit 29 ... 31: Replace the defective measuring unit.

Reaction upon N: NONE

Acknowl. upon N: NONE

Reaction upon A: NONE

Acknowl. upon A: NONE

F33811 (N, A) Encoder 3: Encoder serial number changed

Message value: -

Drive object: VECTOR_G

Reaction: OFF1 (NONE, OFF2, OFF3)

Acknowledge: IMMEDIATELY

Cause: The encoder serial number has changed. The change is only checked for encoders with serial number (e.g. EnDat encoders).
- The encoder was replaced.
Note:
With closed-loop position control, the serial number is accepted when starting the adjustment (p2507 = 2).
When the encoder is adjusted (p2507 = 3), the serial number is checked for changes and if required, the adjustment is reset (p2507 = 1).

© Siemens AG 2012 All Rights Reserved

Proceed as follows to hide serial number monitoring:
- set the following serial numbers for the corresponding Encoder Data Set: p0441= FF, p0442 = 0, p0443 = 0, p0444 = 0, p0445 = 0.

Remedy: Mechanically adjust the encoder. Accept the new serial number with p0440 = 1.

Reaction upon N: NONE
Acknowl. upon N: NONE
Reaction upon A: NONE
Acknowl. upon A: NONE

F33812 (N, A) Encoder 3: Requested cycle or RX-/TX timing not supported

Message value: %1
Drive object: VECTOR_G
Reaction: OFF2
Acknowledge: IMMEDIATELY
Cause: A cycle requested from the Control Unit or RX/TX timing is not supported.
Fault value (r0949, interpret decimal):
0: Application cycle is not supported.
1: DRIVE-CLiQ cycle is not supported.
2: Distance between RX and TX instants in time too low.
3: TX instant in time too early.
Remedy: Carry out a POWER ON (power off/on) for all components.

Reaction upon N: NONE
Acknowl. upon N: NONE
Reaction upon A: NONE
Acknowl. upon A: NONE

F33813 Encoder 3: Hardware logic unit failed

Message value: Fault cause: %1 bin
Drive object: VECTOR_G
Reaction: OFF1 (IASC/DCBRAKE, NONE, OFF2, OFF3)
Acknowledge: PULSE INHIBIT
Cause: The DRIVE-CLiQ encoder fault word supplies fault bits that have been set.
Fault value (r0949, interpret binary):
Bit 0: ALU watchdog has responded.
Bit 1: ALU has detected a sign-of-life error.
Remedy: Replace encoder.

F33820 (N, A) Encoder 3 DRIVE-CLiQ: Telegram error

Message value: Component number: %1, fault cause: %2
Drive object: VECTOR_G
Reaction: OFF1 (IASC/DCBRAKE, NONE, OFF2, OFF3)
Acknowledge: IMMEDIATELY
Cause: A DRIVE-CLiQ communication error has occurred from the Control Unit to the encoder concerned.
Fault cause:
1 (= 01 hex):
Checksum error (CRC error).
2 (= 02 hex):
Telegram is shorter than specified in the length byte or in the receive list.
3 (= 03 hex):
Telegram is longer than specified in the length byte or in the receive list.
4 (= 04 hex):
The length of the receive telegram does not match the receive list.
5 (= 05 hex):
The type of the receive telegram does not match the receive list.
6 (= 06 hex):
The address of the component in the telegram and in the receive list do not match.
7 (= 07 hex):
A SYNC telegram is expected - but the received telegram is not a SYNC telegram.

© Siemens AG 2012 All Rights Reserved

8 (= 08 hex):
No SYNC telegram is expected - but the received telegram is one.
9 (= 09 hex):
The error bit in the receive telegram is set.
16 (= 10 hex):
The receive telegram is too early.
Note regarding the message value:
The individual information is coded as follows in the message value (r0949/r2124):
0000yyxx hex: yy = component number, xx = error cause

Remedy: - carry out a POWER ON (power off/on).
- check the electrical cabinet design and cable routing for EMC compliance
- check the DRIVE-CLiQ wiring (interrupted cable, contacts, ...).
See also: p9916 (DRIVE-CLiQ data transfer error shutdown threshold slave)

Reaction upon N: NONE
Acknowl. upon N: NONE
Reaction upon A: NONE
Acknowl. upon A: NONE

F33835 (N, A) Encoder 3 DRIVE-CLiQ: Cyclic data transfer error

Message value: Component number: %1, fault cause: %2
Drive object: VECTOR_G
Reaction: OFF1 (IASC/DCBRAKE, NONE, OFF2, OFF3)
Acknowledge: IMMEDIATELY
Cause: A DRIVE-CLiQ communication error has occurred from the Control Unit to the encoder concerned. The nodes do not send and receive in synchronism.
Fault cause:
33 (= 21 hex):
The cyclic telegram has not been received.
34 (= 22 hex):
Timeout in the telegram receive list.
64 (= 40 hex):
Timeout in the telegram send list.
Note regarding the message value:
The individual information is coded as follows in the message value (r0949/r2124):
0000yyxx hex: yy = component number, xx = error cause

Remedy: - carry out a POWER ON.
- replace the component involved.
See also: p9916 (DRIVE-CLiQ data transfer error shutdown threshold slave)

Reaction upon N: NONE
Acknowl. upon N: NONE
Reaction upon A: NONE
Acknowl. upon A: NONE

F33836 (N, A) Encoder 3 DRIVE-CLiQ: Send error for DRIVE-CLiQ data

Message value: Component number: %1, fault cause: %2
Drive object: VECTOR_G
Reaction: OFF1 (IASC/DCBRAKE, NONE, OFF2, OFF3)
Acknowledge: IMMEDIATELY
Cause: A DRIVE-CLiQ communication error has occurred from the Control Unit to the encoder involved. Data were not able to be sent.
Fault cause:
65 (= 41 hex):
Telegram type does not match send list.
Note regarding the message value:
The individual information is coded as follows in the message value (r0949/r2124):
0000yyxx hex: yy = component number, xx = error cause

Remedy: Carry out a POWER ON.

Reaction upon N: NONE
Acknowl. upon N: NONE

© Siemens AG 2012 All Rights Reserved

Reaction upon A: NONE
Acknowl. upon A: NONE

F33837 (N, A) Encoder 3 DRIVE-CLiQ: Component fault

Message value: Component number: %1, fault cause: %2
Drive object: VECTOR_G
Reaction: OFF1 (IASC/DCBRAKE, NONE, OFF2, OFF3)
Acknowledge: IMMEDIATELY
Cause: Fault detected on the DRIVE-CLiQ component concerned. Faulty hardware cannot be excluded.
Fault cause:
32 (= 20 hex):
Error in the telegram header.
35 (= 23 hex):
Receive error: The telegram buffer memory contains an error.
66 (= 42 hex):
Send error: The telegram buffer memory contains an error.
67 (= 43 hex):
Send error: The telegram buffer memory contains an error.
Note regarding the message value:
The individual information is coded as follows in the message value (r0949/r2124):
0000yyxx hex: yy = component number, xx = error cause
Remedy: - check the DRIVE-CLiQ wiring (interrupted cable, contacts, ...).
- check the electrical cabinet design and cable routing for EMC compliance
- if required, use another DRIVE-CLiQ socket (p9904).
- replace the component involved.
Reaction upon N: NONE
Acknowl. upon N: NONE
Reaction upon A: NONE
Acknowl. upon A: NONE

F33845 (N, A) Encoder 3 DRIVE-CLiQ: Cyclic data transfer error

Message value: Component number: %1, fault cause: %2
Drive object: VECTOR_G
Reaction: OFF1 (IASC/DCBRAKE, NONE, OFF2, OFF3)
Acknowledge: IMMEDIATELY
Cause: A DRIVE-CLiQ communication error has occurred from the Control Unit to the encoder involved.
Fault cause:
11 (= 0B hex):
Synchronization error during alternating cyclic data transfer.
Note regarding the message value:
The individual information is coded as follows in the message value (r0949/r2124):
0000yyxx hex: yy = component number, xx = error cause
Remedy: Carry out a POWER ON.
See also: p9916 (DRIVE-CLiQ data transfer error shutdown threshold slave)
Reaction upon N: NONE
Acknowl. upon N: NONE
Reaction upon A: NONE
Acknowl. upon A: NONE

F33850 (N, A) Encoder 3: Encoder evaluation, internal software error

Message value: %1
Drive object: VECTOR_G
Reaction: OFF1 (IASC/DCBRAKE, NONE, OFF2, OFF3)
Acknowledge: POWER ON
Cause: An internal software error has occurred in the Sensor Module of encoder 3.
Fault value (r0949, interpret decimal):
1: Background time slice is blocked.
2: Checksum over the code memory is not OK.

© Siemens AG 2012 All Rights Reserved

10000: OEM memory of the EnDat encoder contains data that cannot be interpreted.
11000 ... 11499: Descriptive data from EEPROM incorrect.
11500 ... 11899: Calibration data from EEPROM incorrect.
11900 ... 11999: Configuration data from EEPROM incorrect.
12000 ... 12008: Communication with AD converter faulted.
16000: DRIVE-CLiQ encoder initialization application error.
16001: DRIVE-CLiQ encoder initialization ALU error.
16002: DRIVE-CLiQ encoder HISI / SISI initialization error.
16003: DRIVE-CLiQ encoder safety initialization error.
16004: DRIVE-CLiQ encoder internal system error.

Remedy: - replace the Sensor Module.
- if required, upgrade the firmware in the Sensor Module.
- contact the Hotline.

Reaction upon N: NONE
Acknowl. upon N: NONE
Reaction upon A: NONE
Acknowl. upon A: NONE

F33851 (N, A) Encoder 3 DRIVE-CLiQ (CU): Sign-of-life missing

Message value: Component number: %1, fault cause: %2
Drive object: VECTOR_G
Reaction: OFF1 (IASC/DCBRAKE, NONE, OFF2, OFF3)
Acknowledge: IMMEDIATELY
Cause: A DRIVE-CLiQ communication error has occurred from the Sensor Module (encoder 3) involved to the Control Unit.
The DRIVE-CLiQ component did not set the sign-of-life to the Control Unit.
Fault cause:
10 (= 0A hex):
The sign-of-life bit in the receive telegram is not set.
Note regarding the message value:
The individual information is coded as follows in the message value (r0949/r2124):
0000yyxx hex: yy = component number, xx = error cause
Remedy: Upgrade the firmware of the component involved.
Reaction upon N: NONE
Acknowl. upon N: NONE
Reaction upon A: NONE
Acknowl. upon A: NONE

F33860 (N, A) Encoder 3 DRIVE-CLiQ (CU): Telegram error

Message value: Component number: %1, fault cause: %2
Drive object: VECTOR_G
Reaction: OFF1 (IASC/DCBRAKE, NONE, OFF2, OFF3)
Acknowledge: IMMEDIATELY
Cause: A DRIVE-CLiQ communication error has occurred from the Sensor Module (encoder 3) involved to the Control Unit.
Fault cause:
1 (= 01 hex):
Checksum error (CRC error).
2 (= 02 hex):
Telegram is shorter than specified in the length byte or in the receive list.
3 (= 03 hex):
Telegram is longer than specified in the length byte or in the receive list.
4 (= 04 hex):
The length of the receive telegram does not match the receive list.
5 (= 05 hex):
The type of the receive telegram does not match the receive list.
6 (= 06 hex):
The address of the power unit in the telegram and in the receive list do not match.
9 (= 09 hex):
The error bit in the receive telegram is set.

© Siemens AG 2012 All Rights Reserved

16 (= 10 hex):
The receive telegram is too early.
17 (= 11 hex):
CRC error and the receive telegram is too early.
18 (= 12 hex):
The telegram is shorter than that specified in the length byte or in the receive list and the receive telegram is too early.
19 (= 13 hex):
The telegram is longer than that specified in the length byte or in the receive list and the receive telegram is too early.
20 (= 14 hex):
The length of the receive telegram does not match the receive list and the receive telegram is too early.
21 (= 15 hex):
The type of the receive telegram does not match the receive list and the receive telegram is too early.
22 (= 16 hex):
The address of the power unit in the telegram and in the receive list does not match and the receive telegram is too early.
25 (= 19 hex):
The error bit in the receive telegram is set and the receive telegram is too early.
Note regarding the message value:
The individual information is coded as follows in the message value (r0949/r2124):
0000yyxx hex: yy = component number, xx = error cause

Remedy: - carry out a POWER ON (power off/on).
- check the electrical cabinet design and cable routing for EMC compliance
- check the DRIVE-CLiQ wiring (interrupted cable, contacts, ...).
See also: p9915 (DRIVE-CLiQ data transfer error shutdown threshold master)

Reaction upon N: NONE
Acknowl. upon N: NONE
Reaction upon A: NONE
Acknowl. upon A: NONE

F33875 (N, A) Encoder 3 DRIVE-CLiQ (CU): Supply voltage failed

Message value: Component number: %1, fault cause: %2
Drive object: VECTOR_G
Reaction: OFF1 (IASC/DCBRAKE, NONE, OFF2, OFF3)
Acknowledge: IMMEDIATELY
Cause: The DRIVE-CLiQ communication from the DRIVE-CLiQ component involved to the Control Unit signals that the supply voltage has failed.
Fault cause:
9 (= 09 hex):
The power supply voltage for the components has failed.
Note regarding the message value:
The individual information is coded as follows in the message value (r0949/r2124):
0000yyxx hex: yy = component number, xx = error cause

Remedy: - carry out a POWER ON (power off/on).
- check the power supply voltage wiring for the DRIVE-CLiQ component (interrupted cable, contacts, ...).
- check the dimensioning of the power supply for the DRIVE-CLiQ component.

Reaction upon N: NONE
Acknowl. upon N: NONE
Reaction upon A: NONE
Acknowl. upon A: NONE

F33885 (N, A) Encoder 3 DRIVE-CLiQ (CU): Cyclic data transfer error

Message value: Component number: %1, fault cause: %2
Drive object: VECTOR_G
Reaction: OFF1 (IASC/DCBRAKE, NONE, OFF2, OFF3)
Acknowledge: IMMEDIATELY
Cause: A DRIVE-CLiQ communication error has occurred from the Sensor Module (encoder 3) involved to the Control Unit. The nodes do not send and receive in synchronism.

© Siemens AG 2012 All Rights Reserved

Fault cause:
26 (= 1A hex):
Sign-of-life bit in the receive telegram not set and the receive telegram is too early.
33 (= 21 hex):
The cyclic telegram has not been received.
34 (= 22 hex):
Timeout in the telegram receive list.
64 (= 40 hex):
Timeout in the telegram send list.
98 (= 62 hex):
Error at the transition to cyclic operation.
Note regarding the message value:
The individual information is coded as follows in the message value (r0949/r2124):
0000yyxx hex: yy = component number, xx = error cause

Remedy: - check the power supply voltage of the component involved.
- carry out a POWER ON.
- replace the component involved.
See also: p9915 (DRIVE-CLiQ data transfer error shutdown threshold master)

Reaction upon N: NONE
Acknowl. upon N: NONE
Reaction upon A: NONE
Acknowl. upon A: NONE

F33886 (N, A) Encoder 3 DRIVE-CLiQ (CU): Error when sending DRIVE-CLiQ data

Message value: Component number: %1, fault cause: %2
Drive object: VECTOR_G
Reaction: OFF1 (IASC/DCBRAKE, NONE, OFF2, OFF3)
Acknowledge: IMMEDIATELY
Cause: A DRIVE-CLiQ communication error has occurred from the Sensor Module (encoder 3) involved to the Control Unit. Data were not able to be sent.
Fault cause:
65 (= 41 hex):
Telegram type does not match send list.
Note regarding the message value:
The individual information is coded as follows in the message value (r0949/r2124):
0000yyxx hex: yy = component number, xx = error cause
Remedy: Carry out a POWER ON.
Reaction upon N: NONE
Acknowl. upon N: NONE
Reaction upon A: NONE
Acknowl. upon A: NONE

F33887 (N, A) Encoder 3 DRIVE-CLiQ (CU): Component fault

Message value: Component number: %1, fault cause: %2
Drive object: VECTOR_G
Reaction: OFF1 (IASC/DCBRAKE, NONE, OFF2, OFF3)
Acknowledge: IMMEDIATELY
Cause: Fault detected on the DRIVE-CLiQ component involved (Sensor Module for encoder 3). Faulty hardware cannot be excluded.
Fault cause:
32 (= 20 hex):
Error in the telegram header.
35 (= 23 hex):
Receive error: The telegram buffer memory contains an error.
66 (= 42 hex):
Send error: The telegram buffer memory contains an error.
67 (= 43 hex):
Send error: The telegram buffer memory contains an error.

© Siemens AG 2012 All Rights Reserved

96 (= 60 hex):
Response received too late during runtime measurement.
97 (= 61 hex):
Time taken to exchange characteristic data too long.
Note regarding the message value:
The individual information is coded as follows in the message value (r0949/r2124):
0000yyxx hex: yy = component number, xx = error cause

Remedy: - check the DRIVE-CLiQ wiring (interrupted cable, contacts, ...).
- check the electrical cabinet design and cable routing for EMC compliance
- if required, use another DRIVE-CLiQ socket (p9904).
- replace the component involved.

Reaction upon N: NONE
Acknowl. upon N: NONE
Reaction upon A: NONE
Acknowl. upon A: NONE

F33895 (N, A) Encoder 3 DRIVE-CLiQ (CU): Alternating cyclic data transfer error

Message value: Component number: %1, fault cause: %2
Drive object: VECTOR_G
Reaction: OFF1 (IASC/DCBRAKE, NONE, OFF2, OFF3)
Acknowledge: IMMEDIATELY
Cause: A DRIVE-CLiQ communication error has occurred from the Sensor Module (encoder 3) involved to the Control Unit.
Fault cause:
11 (= 0B hex):
Synchronization error during alternating cyclic data transfer.
Note regarding the message value:
The individual information is coded as follows in the message value (r0949/r2124):
0000yyxx hex: yy = component number, xx = error cause

Remedy: Carry out a POWER ON.
See also: p9915 (DRIVE-CLiQ data transfer error shutdown threshold master)

Reaction upon N: NONE
Acknowl. upon N: NONE
Reaction upon A: NONE
Acknowl. upon A: NONE

F33896 (N, A) Encoder 3 DRIVE-CLiQ (CU): Inconsistent component properties

Message value: Component number: %1
Drive object: VECTOR_G
Reaction: OFF2 (IASC/DCBRAKE, NONE, OFF1, OFF3, STOP1, STOP2)
Acknowledge: IMMEDIATELY
Cause: The properties of the DRIVE-CLiQ component (Sensor Module for encoder 3), specified by the fault value, have changed in an incompatible fashion with respect to the properties when booted. One cause can be, e.g. that a DRIVE-CLiQ cable or DRIVE-CLiQ component has been replaced.
Fault value (r0949, interpret decimal):
Component number.

Remedy: - carry out a POWER ON.
- when a component is replaced, the same component type and if possible the same firmware version should be used.
- when a cable is replaced, only cables whose length is the same as or as close as possible to the length of the original cables should be used (ensure compliance with the maximum cable length).

Reaction upon N: NONE
Acknowl. upon N: NONE
Reaction upon A: NONE
Acknowl. upon A: NONE

© Siemens AG 2012 All Rights Reserved

F33899 (N, A) Encoder 3: Unknown fault

Message value: New message: %1
Drive object: VECTOR_G
Reaction: OFF1 (IASC/DCBRAKE, NONE, OFF2, OFF3, STOP1, STOP2)
Acknowledge: IMMEDIATELY (POWER ON)
Cause: A fault occurred on the Sensor Module for encoder 3 that cannot be interpreted by the Control Unit firmware.
This can occur if the firmware on this component is more recent than the firmware on the Control Unit.
Fault value (r0949, interpret decimal):
Fault number.
Note:
If required, the significance of this new fault can be read about in a more recent description of the Control Unit.
Remedy: - replace the firmware on the Sensor Module by an older firmware version (r0148).
- upgrade the firmware on the Control Unit (r0018).
Reaction upon N: NONE
Acknowl. upon N: NONE
Reaction upon A: NONE
Acknowl. upon A: NONE

A33902 (F, N) Encoder 3: SPI-BUS error occurred

Message value: %1
Drive object: VECTOR_G
Reaction: NONE
Acknowledge: NONE
Cause: Error when operating the internal SPI bus.
Fault value (r0949, interpret hexadecimal):
Only for internal Siemens troubleshooting.
Remedy: - replace the Sensor Module.
- if required, upgrade the firmware in the Sensor Module.
- contact the Hotline.
Reaction upon F: NONE (ENCODER, IASC/DCBRAKE, OFF1, OFF2, OFF3, STOP1, STOP2)
Acknowl. upon F: IMMEDIATELY
Reaction upon N: NONE
Acknowl. upon N: NONE

A33903 (F, N) Encoder 3: I2C-BUS error occurred

Message value: %1
Drive object: VECTOR_G
Reaction: NONE
Acknowledge: NONE
Cause: Error when operating the internal I2C bus.
Fault value (r0949, interpret hexadecimal):
Only for internal Siemens troubleshooting.
Remedy: - replace the Sensor Module.
- if required, upgrade the firmware in the Sensor Module.
- contact the Hotline.
Reaction upon F: NONE (ENCODER, IASC/DCBRAKE, OFF1, OFF2, OFF3, STOP1, STOP2)
Acknowl. upon F: IMMEDIATELY
Reaction upon N: NONE
Acknowl. upon N: NONE

© Siemens AG 2012 All Rights Reserved

F33905 (N, A) Encoder 3: Parameterization error

Message value: Parameter: %1, supplementary information: %2

Drive object: VECTOR_G

Reaction: OFF1 (IASC/DCBRAKE, NONE, OFF2, OFF3, STOP1, STOP2)

Acknowledge: IMMEDIATELY

Cause: A parameter of encoder 3 was detected as being incorrect.
It is possible that the parameterized encoder type does not match the connected encoder.
The parameter involved can be determined as follows:
- determine the parameter number using the fault value (r0949).
- determine the parameter index (p0187).
Fault value (r0949, interpret decimal):
yyyyxxxx dec: yyyy = supplementary information, xxxx = parameter
xxxx = 421:
For an EnDat/SSI encoder, the absolute position in the protocol must be less than or equal to 30 bits.
yyyy = 0:
No information available.
yyyy = 1:
The component does not support HTL level (p0405.1 = 0) combined with track monitoring A/B <> -A/B (p0405.2 = 1).
yyyy = 2:
A code number for an identified encoder has been entered into p0400, however, no identification was carried out.
Please start a new encoder identification.
yyyy = 3:
A code number for an identified encoder has been entered into p0400, however, no identification was carried out.
Please select a listed encoder in p0400 with a code number < 10000.
yyyy = 4:
This component does not support SSI encoders (p0404.9 = 1) without track A/B.
yyyy = 5:
For SQW encoder, value in p4686 greater than in p0425.
yyyy = 6:
DRIVE-CLiQ encoder cannot be used with this firmware version.
yyyy = 7:
For an SQW encoder, the Xact1 correction (p0437.2) is only permitted with equidistant zero marks.
yyyy = 8:
The motor pole pair width is not supported by the linear scale being used.
yyyy = 9:
The length of the position in the EnDat protocol may be a maximum of 32 bits.
yyyy = 10:
The connected encoder is not supported.

Remedy: - check whether the connected encoder type matches the encoder that has been parameterized.
- correct the parameter specified by the fault value (r0949) and p0187.
- re parameter number = 314:
- check the pole pair number and measuring gear ratio. The quotient of the "pole pair number" divided by the "measuring gear ratio" must be less than or equal to 1000 ((r0313 * p0433) / p0432 <= 1000).

Reaction upon N: NONE

Acknowl. upon N: NONE

Reaction upon A: NONE

Acknowl. upon A: NONE

F33912 Encoder 3: Device combination is not permissible

Message value: %1

Drive object: VECTOR_G

Reaction: ENCODER (IASC/DCBRAKE, NONE)

Acknowledge: PULSE INHIBIT

Cause: The selected device combination is not supported.
Fault value (r0949, interpret decimal):
1003:
The connected measuring unit cannot be operated with the EnDat 2.2 converter. For instance, the measuring unit has a pulse number/resolution of 2^n.
1005:
The type of measuring unit (incremental) is not supported by the EnDat 2.2 converter.

© Siemens AG 2012 All Rights Reserved

1006:
The maximum duration (31.25 µs) of the EnDat transfer was exceeded.
2001:
The set combination of current controller cycle, DP cycle and Safety cycle is not supported by the EnDat 2.2 converter.
2002:
The resolution of the linear measuring unit does not match the pole pair width of the linear motor

Remedy: Re fault value = 1003, 1005, 1006:
- Use a measuring unit that is permissible.
For fault value = 2001:
- Set a permissible cycle combination (if required, use standard settings).
For fault value = 2002:
- Use a measuring unit with a lower resolution (p0422).

A33915 (F, N) Encoder 3: Configuration error

Message value: %1
Drive object: VECTOR_G
Reaction: NONE
Acknowledge: NONE
Cause: The configuration for encoder 3 is incorrect.
Alarm value (r2124, interpret decimal):
1:
Re-parameterization between fault/alarm is not permissible.
419:
When the fine resolution Gx_XIST2 is configured, the encoder identifies a maximum possible absolute position actual value (r0483) that can no longer be represented within 32 bits.
Remedy: Re alarm value = 1:
No re-parameterization between fault/alarm.
Re alarm value = 419:
Reduce the fine resolution (p0419) or deactivate the monitoring (p0437.25), if the complete multiturn range is not required.
Reaction upon F: NONE (IASC/DCBRAKE)
Acknowl. upon F: IMMEDIATELY
Reaction upon N: NONE
Acknowl. upon N: NONE

F33916 (N, A) Encoder 3: Parameterization fault

Message value: Parameter: %1, supplementary information: %2
Drive object: VECTOR_G
Reaction: OFF1 (IASC/DCBRAKE, NONE, OFF2, OFF3, STOP1, STOP2)
Acknowledge: IMMEDIATELY
Cause: A parameter of encoder 3 was detected as being incorrect.
It is possible that the parameterized encoder type does not match the connected encoder.
The parameter involved can be determined as follows:
- determine the parameter number using the fault value (r0949).
- determine the parameter index (p0187).
Fault value (r0949, interpret decimal):
Parameter number.
Note:
This fault is only output for encoders where r0404.10 = 1 or r0404.11 = 1. It corresponds to A33905 with encoders where r0404.10 = 0 and r0404.11 = 0.
Remedy: - check whether the connected encoder type matches the encoder that has been parameterized.
- correct the parameter specified by the fault value (r0949) and p0187.
Reaction upon N: NONE
Acknowl. upon N: NONE
Reaction upon A: NONE
Acknowl. upon A: NONE

© Siemens AG 2012 All Rights Reserved

A33920 (F, N) Encoder 3: Temperature sensor fault

Message value: Fault cause: %1, channel number: %2

Drive object: VECTOR_G

Reaction: NONE

Acknowledge: NONE

Cause: When evaluating the temperature sensor, an error occurred.
Fault cause:
1 (= 01 hex):
Wire breakage or sensor not connected (KTY: R > 1630 Ohm).
2 (= 02 hex):
Measured resistance too low (PTC: R < 20 Ohm, KTY: R < 50 Ohm).
Additional values:
Only for internal Siemens troubleshooting.
Note regarding the message value:
The individual information is coded as follows in the message value (r0949/r2124):
0000yyxx hex: yy = channel number, xx = error cause

Remedy: - check that the encoder cable is the correct type and is correctly connected.
- check the temperature sensor selection in p0600 to p0603.
- replace the Sensor Module (hardware defect or incorrect calibration data).

Reaction upon F: NONE (IASC/DCBRAKE, OFF1, OFF2, OFF3, STOP1, STOP2)

Acknowl. upon F: IMMEDIATELY

Reaction upon N: NONE

Acknowl. upon N: NONE

A33930 (N) Encoder 3: Data logger has saved data

Message value: -

Drive object: VECTOR_G

Reaction: NONE

Acknowledge: NONE

Cause: For the activated function "Data logger" (p0437.0 = 1) a fault has occurred with the Sensor Module. This alarm indicates that the diagnostics data corresponding to the fault was saved on the memory card.
The diagnostics data is saved in the following folder:
/USER/SINAMICS/DATA/SMTRC00.BIN
...
/USER/SINAMICS/DATA/SMTRC07.BIN
/USER/SINAMICS/DATA/SMTRCIDX.TXT
The following information is contained in the TXT file:
- Display of the last written BIN file.
- Number of write operations that are still possible (from 10000 downwards).
Note:
Only Siemens can evaluate the BIN files.

Remedy: Not necessary.
The alarm disappears automatically.
The data logger is ready to record the next fault case.

Reaction upon N: NONE

Acknowl. upon N: NONE

A33940 (F, N) Encoder 3: Spindle sensor S1 voltage incorrect

Message value: %1

Drive object: VECTOR_G

Reaction: NONE

Acknowledge: NONE

Cause: The voltage of analog sensor S1 is outside the permissible range.
Fault value (r0949, interpret decimal):
Signal level from sensor S1.
Note:
A signal level of 500 mV corresponds to the numerical value 500 dec.

© Siemens AG 2012 All Rights Reserved

Remedy: - Check the clamped tool.
- Check the tolerance and if required, adapt (p5040).
- Check the thresholds and if required, adapt (p5041).
- Check analog sensor S1 and connections.

Reaction upon F: NONE (IASC/DCBRAKE, OFF1, OFF2, OFF3, STOP1, STOP2)
Acknowl. upon F: IMMEDIATELY
Reaction upon N: NONE
Acknowl. upon N: NONE

F33950 Encoder 3: Internal software error

Message value: %1
Drive object: VECTOR_G
Reaction: ENCODER (OFF2)
Acknowledge: POWER ON
Cause: An internal software error has occurred.
Fault value (r0949, interpret decimal):
Information about the fault source.
Only for internal Siemens troubleshooting.
Remedy: - If necessary, upgrade the firmware in the Sensor Module to a later version.
- contact the Hotline.

A33999 (F, N) Encoder 3: Unknown alarm

Message value: New message: %1
Drive object: VECTOR_G
Reaction: NONE
Acknowledge: NONE
Cause: A alarm has occurred on the Sensor Module for encoder 3 that cannot be interpreted by the Control Unit firmware.
This can occur if the firmware on this component is more recent than the firmware on the Control Unit.
Alarm value (r2124, interpret decimal):
Alarm number.
Note:
If required, the significance of this new alarm can be read about in a more recent description of the Control Unit.
Remedy: - replace the firmware on the Sensor Module by an older firmware version (r0148).
- upgrade the firmware on the Control Unit (r0018).

Reaction upon F: NONE (IASC/DCBRAKE, OFF1, OFF2, OFF3, STOP1, STOP2)
Acknowl. upon F: IMMEDIATELY (POWER ON)
Reaction upon N: NONE
Acknowl. upon N: NONE

F34207 (N, A) VSM: Temperature fault threshold exceeded

Message value: %1
Drive object: B_INF, VECTOR_G
Reaction: Infeed: OFF2 (NONE, OFF1)
Vector: NONE
Acknowledge: IMMEDIATELY (POWER ON)
Cause: The temperature (r3666) measured using the Voltage Sensing Module (VSM) has exceeded the threshold value (p3668).
Note:
This fault can only be initiated if the temperature evaluation was activated (p3665 = 2 for a KTY sensor or p3665 = 1 for a PTC sensor).
Fault value (r0949, interpret decimal):
yyxxxx dec:
yy: Component number of the component which detected the fault.
Remedy: - check the fan.
- reduce the power.

Reaction upon N: NONE
Acknowl. upon N: NONE

© Siemens AG 2012 All Rights Reserved

Reaction upon A: NONE
Acknowl. upon A: NONE

A34211 (F, N) VSM: Temperature alarm threshold exceeded

Message value: %1
Drive object: B_INF, VECTOR_G
Reaction: NONE
Acknowledge: NONE
Cause: The temperature (r3666) measured using the Voltage Sensing Module (VSM) has exceeded the threshold value (p3667).
Alarm value (r2124, interpret decimal):
The hundred-thousands and ten-thousands position specifies the component number of the VSM which detected the fault.
Remedy: - check the fan.
- reduce the power.
Reaction upon F: Infeed: NONE (OFF1, OFF2)
Vector: NONE
Acknowl. upon F: IMMEDIATELY (POWER ON)
Reaction upon N: NONE
Acknowl. upon N: NONE

N34800 (F) VSM: Group signal

Message value: -
Drive object: B_INF, VECTOR_G
Reaction: Infeed: OFF2 (NONE, OFF1)
Vector: NONE (OFF1, OFF2, OFF3)
Acknowledge: NONE
Cause: The Voltage Sensing Module (VSM) has detected at least one fault.
Remedy: Evaluates other actual messages.
Reaction upon F: Infeed: OFF2 (NONE, OFF1)
Vector: NONE (OFF1, OFF2, OFF3)
Acknowl. upon F: IMMEDIATELY

F34801 VSM DRIVE-CLiQ: Sign-of-life missing

Message value: Component number: %1, fault cause: %2
Drive object: B_INF
Reaction: Infeed: OFF2 (NONE, OFF1)
Vector: NONE (OFF1, OFF2, OFF3)
Acknowledge: IMMEDIATELY
Cause: A DRIVE-CLiQ communications error has occurred from the Control Unit to the Voltage Sensing Module (VSM).
Fault cause:
10 (= 0A hex):
The sign-of-life bit in the receive telegram is not set.
Note regarding the message value:
The individual information is coded as follows in the message value (r0949/r2124):
0000yyxx hex: yy = component number, xx = error cause
Remedy: - check the DRIVE-CLiQ connection.
- replace the Voltage Sensing Module (VSM).

F34801 VSM DRIVE-CLiQ: Sign-of-life missing

Message value: Component number: %1, fault cause: %2
Drive object: VECTOR_G
Reaction: Infeed: OFF2 (NONE, OFF1)
Vector: NONE (OFF1, OFF2, OFF3)
Acknowledge: IMMEDIATELY
Cause: A DRIVE-CLiQ communications error has occurred from the Control Unit to the Voltage Sensing Module (VSM).

© Siemens AG 2012 All Rights Reserved

Fault cause:
10 (= 0A hex):
The sign-of-life bit in the receive telegram is not set.
Note regarding the message value:
The individual information is coded as follows in the message value (r0949/r2124):
0000yyxx hex: yy = component number, xx = error cause

Remedy: - check the DRIVE-CLiQ connection.
- replace the component involved.

F34802 VSM: Time slice overflow

Message value: -

Drive object: B_INF, VECTOR_G

Reaction: Infeed: OFF2 (NONE, OFF1)
Vector: NONE (OFF1, OFF2, OFF3)

Acknowledge: IMMEDIATELY

Cause: A time slice overflow has occurred on the Voltage Sensing Module.

Remedy: Replace the Voltage Sensing Module.

F34803 VSM: Memory test

Message value: -

Drive object: B_INF, VECTOR_G

Reaction: Infeed: OFF2 (NONE, OFF1)
Vector: NONE (OFF1, OFF2, OFF3)

Acknowledge: IMMEDIATELY

Cause: An error has occurred during the memory test on the Voltage Sensing Module.

Remedy: - check whether the permissible ambient temperature for the Voltage Sensing Module is being maintained.
- replace the Voltage Sensing Module.

F34804 (N, A) VSM: CRC

Message value: %1

Drive object: B_INF, VECTOR_G

Reaction: Infeed: OFF2 (NONE, OFF1)
Vector: NONE (OFF1, OFF2, OFF3)

Acknowledge: IMMEDIATELY

Cause: A checksum error has occurred when reading-out the program memory on the Voltage Sensing Module (VSM).

Remedy: - check whether the permissible ambient temperature for the component is maintained.
- replace the Voltage Sensing Module.

Reaction upon N: NONE
Acknowl. upon N: NONE
Reaction upon A: NONE
Acknowl. upon A: NONE

F34805 VSM: EPROM checksum error

Message value: %1

Drive object: B_INF, VECTOR_G

Reaction: Infeed: OFF2 (NONE, OFF1)
Vector: NONE (OFF1, OFF2, OFF3)

Acknowledge: IMMEDIATELY

Cause: Internal parameter data is corrupted.
Fault value (r0949, interpret hexadecimal):
01: EEPROM access error.
02: Too many blocks in the EEPROM.

Remedy: - check whether the permissible ambient temperature for the component is maintained.
- replace the Voltage Sensing Module (VSM).

© Siemens AG 2012 All Rights Reserved

F34806 VSM: Initialization

Message value: -
Drive object: B_INF, VECTOR_G
Reaction: Infeed: OFF2 (NONE, OFF1)
Vector: NONE (OFF1, OFF2, OFF3)
Acknowledge: IMMEDIATELY
Cause: For the Voltage Sensing Module (VSM), a fault has occurred while initializing.
Remedy: Replace the Voltage Sensing Module.

A34807 (F, N) VSM: Sequence control time monitoring

Message value: -
Drive object: B_INF, VECTOR_G
Reaction: NONE
Acknowledge: NONE
Cause: Error, timeout in the sequence control on the Voltage Sensing Module (VSM).
Remedy: Replace the Voltage Sensing Module.
Reaction upon F: NONE
Acknowl. upon F: IMMEDIATELY (POWER ON)
Reaction upon N: NONE
Acknowl. upon N: NONE

F34820 VSM DRIVE-CLiQ: Telegram error

Message value: Component number: %1, fault cause: %2
Drive object: B_INF, VECTOR_G
Reaction: Infeed: OFF2 (NONE, OFF1)
Vector: NONE (OFF1, OFF2)
Acknowledge: IMMEDIATELY
Cause: A DRIVE-CLiQ communications error has occurred from the Control Unit to the Voltage Sensing Module involved.
Fault cause:
1 (= 01 hex):
Checksum error (CRC error).
2 (= 02 hex):
Telegram is shorter than specified in the length byte or in the receive list.
3 (= 03 hex):
Telegram is longer than specified in the length byte or in the receive list.
4 (= 04 hex):
The length of the receive telegram does not match the receive list.
5 (= 05 hex):
The type of the receive telegram does not match the receive list.
6 (= 06 hex):
The address of the component in the telegram and in the receive list do not match.
7 (= 07 hex):
A SYNC telegram is expected - but the received telegram is not a SYNC telegram.
8 (= 08 hex):
No SYNC telegram is expected - but the received telegram is one.
9 (= 09 hex):
The error bit in the receive telegram is set.
16 (= 10 hex):
The receive telegram is too early.
Note regarding the message value:
The individual information is coded as follows in the message value (r0949/r2124):
0000yyxx hex: yy = component number, xx = error cause
Remedy: - carry out a POWER ON (power off/on).
- check the electrical cabinet design and cable routing for EMC compliance
- check the DRIVE-CLiQ wiring (interrupted cable, contacts, ...).
See also: p9916 (DRIVE-CLiQ data transfer error shutdown threshold slave)

© Siemens AG 2012 All Rights Reserved

F34835 VSM DRIVE-CLiQ: Cyclic data transfer error

Message value: Component number: %1, fault cause: %2

Drive object: B_INF, VECTOR_G

Reaction: Infeed: OFF2 (NONE, OFF1)
Vector: NONE (OFF1, OFF2)

Acknowledge: IMMEDIATELY

Cause: A DRIVE-CLiQ communications error has occurred from the Control Unit to the Voltage Sensing Module involved.
The nodes do not send and receive in synchronism.
Fault cause:
33 (= 21 hex):
The cyclic telegram has not been received.
34 (= 22 hex):
Timeout in the telegram receive list.
64 (= 40 hex):
Timeout in the telegram send list.
Note regarding the message value:
The individual information is coded as follows in the message value (r0949/r2124):
0000yyxx hex: yy = component number, xx = error cause

Remedy: - carry out a POWER ON.
- replace the component involved.

F34836 VSM DRIVE-CLiQ: Send error for DRIVE-CLiQ data

Message value: Component number: %1, fault cause: %2

Drive object: B_INF, VECTOR_G

Reaction: Infeed: OFF2 (NONE, OFF1)
Vector: NONE (OFF1, OFF2)

Acknowledge: IMMEDIATELY

Cause: A DRIVE-CLiQ communications error has occurred from the Control Unit to the Voltage Sensing Module. Data were not able to be sent.
Fault cause:
65 (= 41 hex):
Telegram type does not match send list.
Note regarding the message value:
The individual information is coded as follows in the message value (r0949/r2124):
0000yyxx hex: yy = component number, xx = error cause

Remedy: Carry out a POWER ON.

F34837 VSM DRIVE-CLiQ: Component fault

Message value: Component number: %1, fault cause: %2

Drive object: B_INF, VECTOR_G

Reaction: Infeed: OFF2 (NONE, OFF1)
Vector: NONE (OFF1, OFF2)

Acknowledge: IMMEDIATELY

Cause: Fault detected on the DRIVE-CLiQ component concerned. Faulty hardware cannot be excluded.
Fault cause:
32 (= 20 hex):
Error in the telegram header.
35 (= 23 hex):
Receive error: The telegram buffer memory contains an error.
66 (= 42 hex):
Send error: The telegram buffer memory contains an error.
67 (= 43 hex):
Send error: The telegram buffer memory contains an error.
Note regarding the message value:
The individual information is coded as follows in the message value (r0949/r2124):
0000yyxx hex: yy = component number, xx = error cause

Remedy: - check the DRIVE-CLiQ wiring (interrupted cable, contacts, ...).
- check the electrical cabinet design and cable routing for EMC compliance

© Siemens AG 2012 All Rights Reserved

- if required, use another DRIVE-CLiQ socket (p9904).
- replace the component involved.

F34845 VSM DRIVE-CLiQ: Cyclic data transfer error

Message value: Component number: %1, fault cause: %2

Drive object: B_INF, VECTOR_G

Reaction: Infeed: OFF2 (NONE, OFF1)
Vector: NONE (OFF1, OFF2)

Acknowledge: IMMEDIATELY

Cause: A DRIVE-CLiQ communications error has occurred from the Control Unit to the Voltage Sensing Module (VSM).
Fault cause:
11 (= 0B hex):
Synchronization error during alternating cyclic data transfer.
Note regarding the message value:
The individual information is coded as follows in the message value (r0949/r2124):
0000yyxx hex: yy = component number, xx = error cause

Remedy: Carry out a POWER ON.
See also: p9916 (DRIVE-CLiQ data transfer error shutdown threshold slave)

F34850 VSM: Internal software error

Message value: %1

Drive object: B_INF, VECTOR_G

Reaction: Infeed: OFF1 (NONE, OFF2)
Vector: OFF1 (NONE, OFF2, OFF3)

Acknowledge: POWER ON

Cause: An internal software error in the Voltage Sensing Module (VSM) has occurred.
Fault value (r0949, interpret decimal):
1: Background time slice is blocked.
2: Checksum over the code memory is not OK.

Remedy: - replace the Voltage Sensing Module (VSM).
- if required, upgrade the firmware in the Voltage Sensing Module.
- contact the Hotline.

F34851 VSM DRIVE-CLiQ (CU): Sign-of-life missing

Message value: Component number: %1, fault cause: %2

Drive object: B_INF, TM150, TM31, VECTOR_G

Reaction: Infeed: OFF2 (NONE, OFF1)
Vector: NONE (OFF1, OFF2)

Acknowledge: IMMEDIATELY

Cause: A DRIVE-CLiQ communications error has occurred from the Voltage Sensing Module involved (VSM) to the Control Unit.
The DRIVE-CLiQ component did not set the sign-of-life to the Control Unit.
Fault cause:
10 (= 0A hex):
The sign-of-life bit in the receive telegram is not set.
Note regarding the message value:
The individual information is coded as follows in the message value (r0949/r2124):
0000yyxx hex: yy = component number, xx = error cause

Remedy: Upgrade the firmware of the component involved.

F34860 VSM DRIVE-CLiQ (CU): Telegram error

Message value: Component number: %1, fault cause: %2

Drive object: B_INF, TM150, TM31, VECTOR_G

Reaction: Infeed: OFF2 (NONE, OFF1)
Vector: NONE (OFF1, OFF2)

Acknowledge: IMMEDIATELY

Cause: A DRIVE-CLiQ communications error has occurred from the Voltage Sensing Module involved (VSM) to the Control Unit.

© Siemens AG 2012 All Rights Reserved

Fault cause:
1 (= 01 hex):
Checksum error (CRC error).
2 (= 02 hex):
Telegram is shorter than specified in the length byte or in the receive list.
3 (= 03 hex):
Telegram is longer than specified in the length byte or in the receive list.
4 (= 04 hex):
The length of the receive telegram does not match the receive list.
5 (= 05 hex):
The type of the receive telegram does not match the receive list.
6 (= 06 hex):
The address of the power unit in the telegram and in the receive list do not match.
9 (= 09 hex):
The error bit in the receive telegram is set.
16 (= 10 hex):
The receive telegram is too early.
17 (= 11 hex):
CRC error and the receive telegram is too early.
18 (= 12 hex):
The telegram is shorter than that specified in the length byte or in the receive list and the receive telegram is too early.
19 (= 13 hex):
The telegram is longer than that specified in the length byte or in the receive list and the receive telegram is too early.
20 (= 14 hex):
The length of the receive telegram does not match the receive list and the receive telegram is too early.
21 (= 15 hex):
The type of the receive telegram does not match the receive list and the receive telegram is too early.
22 (= 16 hex):
The address of the power unit in the telegram and in the receive list does not match and the receive telegram is too early.
25 (= 19 hex):
The error bit in the receive telegram is set and the receive telegram is too early.
Note regarding the message value:
The individual information is coded as follows in the message value (r0949/r2124):
0000yyxx hex: yy = component number, xx = error cause

Remedy:
- carry out a POWER ON (power off/on).
- check the electrical cabinet design and cable routing for EMC compliance
- check the DRIVE-CLiQ wiring (interrupted cable, contacts, ...).

See also: p9915 (DRIVE-CLiQ data transfer error shutdown threshold master)

F34875 VSM DRIVE-CLiQ (CU): Supply voltage failed

Message value: Component number: %1, fault cause: %2

Drive object: B_INF, TM150, TM31, VECTOR_G

Reaction: OFF2

Acknowledge: IMMEDIATELY

Cause: The DRIVE-CLiQ communication from the DRIVE-CLiQ component involved to the Control Unit signals that the supply voltage has failed.
Fault cause:
9 (= 09 hex):
The power supply voltage for the components has failed.
Note regarding the message value:
The individual information is coded as follows in the message value (r0949/r2124):
0000yyxx hex: yy = component number, xx = error cause

Remedy:
- carry out a POWER ON (power off/on).
- check the power supply voltage wiring for the DRIVE-CLiQ component (interrupted cable, contacts, ...).
- check the dimensioning of the power supply for the DRIVE-CLiQ component.

© Siemens AG 2012 All Rights Reserved

F34885 VSM DRIVE-CLiQ (CU): Cyclic data transfer error

Message value: Component number: %1, fault cause: %2

Drive object: B_INF, TM150, TM31, VECTOR_G

Reaction: Infeed: OFF2 (NONE, OFF1)
Vector: NONE (OFF1, OFF2)

Acknowledge: IMMEDIATELY

Cause: A DRIVE-CLiQ communications error has occurred from the Voltage Sensing Module involved (VSM) to the Control Unit.
The nodes do not send and receive in synchronism.
Fault cause:
26 (= 1A hex):
Sign-of-life bit in the receive telegram not set and the receive telegram is too early.
33 (= 21 hex):
The cyclic telegram has not been received.
34 (= 22 hex):
Timeout in the telegram receive list.
64 (= 40 hex):
Timeout in the telegram send list.
98 (= 62 hex):
Error at the transition to cyclic operation.
Note regarding the message value:
The individual information is coded as follows in the message value (r0949/r2124):
0000yyxx hex: yy = component number, xx = error cause

Remedy: - check the power supply voltage of the component involved.
- carry out a POWER ON.
- replace the component involved.
See also: p9915 (DRIVE-CLiQ data transfer error shutdown threshold master)

F34886 VSM DRIVE-CLiQ (CU): Error when sending DRIVE-CLiQ data

Message value: Component number: %1, fault cause: %2

Drive object: B_INF, TM150, TM31, VECTOR_G

Reaction: Infeed: OFF2 (NONE, OFF1)
Vector: NONE (OFF1, OFF2)

Acknowledge: IMMEDIATELY

Cause: A DRIVE-CLiQ communications error has occurred from the Voltage Sensing Module involved (VSM) to the Control Unit.
Data were not able to be sent.
Fault cause:
65 (= 41 hex):
Telegram type does not match send list.
Note regarding the message value:
The individual information is coded as follows in the message value (r0949/r2124):
0000yyxx hex: yy = component number, xx = error cause

Remedy: Carry out a POWER ON.

F34887 VSM DRIVE-CLiQ (CU): Component fault

Message value: Component number: %1, fault cause: %2

Drive object: B_INF, TM150, TM31, VECTOR_G

Reaction: Infeed: OFF2 (NONE, OFF1)
Vector: NONE (OFF1, OFF2)

Acknowledge: IMMEDIATELY

Cause: Fault detected on the DRIVE-CLiQ component (Voltage Sensing Module) involved. Faulty hardware cannot be excluded.
Fault cause:
32 (= 20 hex):
Error in the telegram header.
35 (= 23 hex):
Receive error: The telegram buffer memory contains an error.

© Siemens AG 2012 All Rights Reserved

66 (= 42 hex):
Send error: The telegram buffer memory contains an error.
67 (= 43 hex):
Send error: The telegram buffer memory contains an error.
96 (= 60 hex):
Response received too late during runtime measurement.
97 (= 61 hex):
Time taken to exchange characteristic data too long.
Note regarding the message value:
The individual information is coded as follows in the message value (r0949/r2124):
0000yyxx hex: yy = component number, xx = error cause

Remedy: - check the DRIVE-CLiQ wiring (interrupted cable, contacts, ...).
- check the electrical cabinet design and cable routing for EMC compliance
- if required, use another DRIVE-CLiQ socket (p9904).
- replace the component involved.

F34895 VSM DRIVE-CLiQ (CU): Alternating cyclic data transfer error

Message value: Component number: %1, fault cause: %2

Drive object: B_INF, TM150, TM31, VECTOR_G

Reaction: Infeed: OFF2 (NONE, OFF1)
Vector: NONE (OFF1, OFF2)

Acknowledge: IMMEDIATELY

Cause: A DRIVE-CLiQ communications error has occurred from the Voltage Sensing Module involved (VSM) to the Control Unit.
Fault cause:
11 (= 0B hex):
Synchronization error during alternating cyclic data transfer.
Note regarding the message value:
The individual information is coded as follows in the message value (r0949/r2124):
0000yyxx hex: yy = component number, xx = error cause

Remedy: Carry out a POWER ON.
See also: p9915 (DRIVE-CLiQ data transfer error shutdown threshold master)

F34896 VSM DRIVE-CLiQ (CU): Inconsistent component properties

Message value: Component number: %1

Drive object: B_INF, TM150, TM31, VECTOR_G

Reaction: Infeed: OFF2 (NONE, OFF1)
Vector: OFF2 (IASC/DCBRAKE, NONE, OFF1, OFF3, STOP1, STOP2)

Acknowledge: IMMEDIATELY

Cause: The properties of the DRIVE-CLiQ component (Voltage Sensing Module), specified by the fault value, have changed in an incompatible fashion with respect to the properties when booted. One cause can be, e.g. that a DRIVE-CLiQ cable or DRIVE-CLiQ component has been replaced.
Fault value (r0949, interpret decimal):
Component number.

Remedy: - carry out a POWER ON.
- when a component is replaced, the same component type and if possible the same firmware version should be used.
- when a cable is replaced, only cables whose length is the same as or as close as possible to the length of the original cables should be used (ensure compliance with the maximum cable length).

F34899 (N, A) VSM: Unknown fault

Message value: New message: %1

Drive object: B_INF, VECTOR_G

Reaction: Infeed: NONE (OFF1, OFF2)
Vector: NONE (OFF1, OFF2, OFF3)

Acknowledge: IMMEDIATELY (POWER ON)

Cause: A fault occurred on the Voltage Sensing Module that cannot be interpreted by the Control Unit firmware.
This can occur if the firmware on this component is more recent than the firmware on the Control Unit.

© Siemens AG 2012 All Rights Reserved

Fault value (r0949, interpret decimal):
Fault number.
Note:
If required, the significance of this new fault can be read about in a more recent description of the Control Unit.

Remedy: - replace the firmware on the Voltage Sensing Module by an older firmware version (r0158).
- upgrade the firmware on the Control Unit (r0018).

Reaction upon N: NONE
Acknowl. upon N: NONE
Reaction upon A: NONE
Acknowl. upon A: NONE

A34903 (F, N) VSM: I2C bus error occurred

Message value: -
Drive object: B_INF
Reaction: NONE
Acknowledge: NONE
Cause: An error has occurred when accessing the module-internal I2C bus.
Remedy: Replace the Voltage Sensing Module (VSM).
Reaction upon F: Infeed: NONE (OFF1, OFF2)
Vector: NONE
Acknowl. upon F: IMMEDIATELY (POWER ON)
Reaction upon N: NONE
Acknowl. upon N: NONE

A34903 (F, N) VSM: I2C bus error occurred

Message value: -
Drive object: VECTOR_G
Reaction: NONE
Acknowledge: NONE
Cause: An error has occurred when accessing the module-internal I2C bus.
Remedy: Replace the Terminal Module.
Reaction upon F: Infeed: NONE (OFF1, OFF2)
Vector: NONE
Acknowl. upon F: IMMEDIATELY (POWER ON)
Reaction upon N: NONE
Acknowl. upon N: NONE

A34904 (F, N) VSM: EEPROM

Message value: -
Drive object: B_INF, VECTOR_G
Reaction: NONE
Acknowledge: NONE
Cause: An error has occurred accessing the non-volatile memory on the Terminal Module.
Remedy: Replace the Voltage Sensing Module (VSM).
Reaction upon F: Infeed: NONE (OFF1, OFF2)
Vector: NONE
Acknowl. upon F: IMMEDIATELY (POWER ON)
Reaction upon N: NONE
Acknowl. upon N: NONE

© Siemens AG 2012 All Rights Reserved

A34905 (F, N) VSM: Parameter access

Message value: -
Drive object: B_INF, VECTOR_G
Reaction: NONE
Acknowledge: NONE
Cause: The Control Unit attempted to write an illegal parameter value to the Voltage Sensing Module (VSM).
Remedy: - check whether the firmware version of the VSM (r0158) matches the firmware version of Control Unit (r0018).
- if required, replace the Voltage Sensing Module.
Note:
The firmware versions that match each other are in the readme.txt file on the memory card.
Reaction upon F: Infeed: NONE (OFF1, OFF2)
Vector: NONE
Acknowl. upon F: IMMEDIATELY (POWER ON)
Reaction upon N: NONE
Acknowl. upon N: NONE

A34920 (F, N) VSM: Temperature sensor fault

Message value: %1
Drive object: B_INF, VECTOR_G
Reaction: NONE
Acknowledge: NONE
Cause: When evaluating the temperature sensor, an error occurred.
Alarm value (r2124, interpret decimal):
1: Wire breakage or sensor not connected (KTY: R > 1630 Ohm).
2: Measured resistance too low (PTC: R < 20 Ohm, KTY: R < 50 Ohm).
Remedy: - make sure that the sensor is connected correctly.
- replace the sensor.
Reaction upon F: Infeed: NONE (OFF1, OFF2)
Vector: NONE
Acknowl. upon F: IMMEDIATELY (POWER ON)
Reaction upon N: NONE
Acknowl. upon N: NONE

F34950 VSM: Internal software error

Message value: %1
Drive object: VECTOR_G
Reaction: OFF2
Acknowledge: POWER ON
Cause: An internal software error in the Voltage Sensing Module (VSM) has occurred.
Fault value (r0949, interpret decimal):
Information about the fault source.
Only for internal Siemens troubleshooting.
Remedy: - If necessary, upgrade the firmware in the Voltage Sensing Module to a later version.
- contact the Hotline.

A34999 (F, N) VSM: Unknown alarm

Message value: New message: %1
Drive object: B_INF, VECTOR_G
Reaction: NONE
Acknowledge: NONE
Cause: A fault occurred on the Voltage Sensing Module (VSM) an alarm has occurred that cannot be interpreted by the Control Unit firmware.
This can occur if the firmware on this component is more recent than the firmware on the Control Unit.
Alarm value (r2124, interpret decimal):
Alarm number.

© Siemens AG 2012 All Rights Reserved

Note:
If required, the significance of this new alarm can be read about in a more recent description of the Control Unit.

Remedy: - replace the firmware on the Voltage Sensing Module by an older firmware version (r0148).
- upgrade the firmware on the Control Unit (r0018).

Reaction upon F: Infeed: NONE (OFF1, OFF2)
Vector: NONE (OFF1, OFF2, OFF3)

Acknowl. upon F: IMMEDIATELY (POWER ON)

Reaction upon N: NONE

Acknowl. upon N: NONE

F35000 TM54F: Sampling time invalid

Message value: %1

Drive object: B_INF, TM54F_MA, TM54F_SL, VECTOR_G

Reaction: NONE

Acknowledge: POWER ON

Cause: The set sampling time is invalid.
- not a multiple integer of the DP clock cycle.
Fault value (r0949, floating point):
Recommended valid sampling time.

Remedy: Adapt the sampling time (e.g. set the recommended valid sampling time).
See also: p10000 (SI sampling time)

F35001 TM54F: Parameter value invalid

Message value: %1

Drive object: B_INF, TM54F_MA, TM54F_SL, VECTOR_G

Reaction: NONE

Acknowledge: IMMEDIATELY (POWER ON)

Cause: The entered value is invalid.
Fault value (r0949, interpret decimal):
Parameter number with the invalid value.

Remedy: Correct the parameter value.

F35002 TM54F: Commissioning not possible

Message value: %1

Drive object: B_INF, TM54F_MA, TM54F_SL, VECTOR_G

Reaction: NONE

Acknowledge: IMMEDIATELY

Cause: The commissioning mode activation was rejected because the pulses had not been suppressed for at least one drive belonging to the TM54F.
Fault value (r0949, interpret decimal):
Drive object number of the first drive found without pulse suppression.

Remedy: Set pulse suppression for the drive specified in the fault value.

F35003 TM54F: Acknowledgement on the Control Unit is required

Message value: -

Drive object: B_INF, TM54F_MA, TM54F_SL, VECTOR_G

Reaction: NONE

Acknowledge: IMMEDIATELY

Cause: A fault on the Terminal Module 54F (TM54) was acknowledged using the safe acknowledgement (P10006).
An additional acknowledgement is also required at the Control Unit.

Remedy: Acknowledge the fault at the Control Unit.

© Siemens AG 2012 All Rights Reserved

F35011 TM54F: Drive object number assignment illegal

Message value: %1
Drive object: B_INF, TM54F_MA, TM54F_SL, VECTOR_G
Reaction: NONE
Acknowledge: IMMEDIATELY (POWER ON)
Cause: A drive object number was assigned twice. Each drive object number can be assigned only once.
Remedy: Correct the assignment of the drive object numbers.
See also: p10010 (SI drive object assignment)

A35012 TM54F: Test stop active

Message value: -
Drive object: B_INF, TM54F_MA, TM54F_SL, VECTOR_G
Reaction: NONE
Acknowledge: NONE
Cause: The test stop for the Terminal Module 54F (TM54F) is presently being executed.
Note:
Fault F35013 is output if a fault occurs during the test stop.
Remedy: The alarm disappears automatically after successfully ending or canceling (when a fault condition occurs) the test stop.

F35013 TM54F: Test stop error

Message value: %1
Drive object: B_INF, TM54F_MA, TM54F_SL, VECTOR_G
Reaction: NONE
Acknowledge: IMMEDIATELY (POWER ON)
Cause: An error was detected when carrying out the test stop on the TM54F. Failsafe control signals (failsafe values) are transferred to the safety functions.
Fault value (r0949, interpret hexadecimal):
aaaabbcc hex:
aaaa: DO or F-DI (dependent on test step cc), where the expected state was not assumed (bit 0 = F-DI 0 or F-DO 0, bit 1 = F-DI 1 or F-DO 1, etc.).
bb: Fault cause
bb = 01 hex: Internal fault.
bb = 02 hex: Fault when comparing the switching signals of the two channels (F-DI or DI).
bb = 03 hex: Internal fault.
bb = 04 hex: Fault when comparing the switching signals of the two channels (Diag-DO).
cc: State of the test stop in which the fault has occurred.
The display format is as follows:
Slave fault state: (test actions)(test actions) | corresponding step for the master: (test actions)(test actions) | Description
00 hex: (L1+OFF)(L2+ON) | 0A hex: ( )( ) | Synchronization / switching step
0A hex: (L1+OFF)(L2+ON) | 15 hex: ( )( ) | Wait step
15 hex: (L1+OFF)(L2+OFF) | 20 hex :( )( ) | 1.) F-DI 0 ... 4 check for 0 V 2.) Switch step to new level
20 hex: (L1+OFF)(L2+OFF) | 2B hex: ( )( ) | Wait step
2B hex: (L1+ON)(L2+ON) | 36 hex: ( )( ) | 1.) F-DI 5 ... 9 check for 0 V 2.) Switch step to new level
36 hex: (DO OFF)( ) | 41 hex: (DO OFF)( ) | Wait step / switching step
41 hex: (DO OFF)( ) | 4C hex: (DO OFF)( ) | Wait step
4C hex: (DO ON)( ) | 57 hex: (DO ON)( ) | 1.) Check diag-DO or diag-DI 2.) Switch step to new level
57 hex: (DO ON)( ) | 62 hex: (DO ON)( ) | Wait step
62 hex: (DO OFF)( ) | 6D hex: (DO ON)( ) | 1.) Check diag-DO or diag-DI 2.) Switch step
6D hex: (DO OFF)( ) | 78 hex: (DO ON)( ) | Wait step
78 hex: (DO ON)( ) | 83 hex: (DO OFF)( ) | 1.) Check diag-DO or diag-DI 2.) Switch step
83 hex: (DO ON)( ) | 8E hex: (DO OFF)( ) | Wait step
8E hex: (DO OFF)( ) | 99 hex: (DO OFF)( ) | 1.) Check diag-DO or diag-DI 2.) Switch step
99 hex: (DO OFF)( ) | A4 hex: (DO OFF)( ) | Wait step
A4 hex: (DO OFF)( ) | AF hex: (DO OFF)( ) | Check Diag-DO or Diag-DI
AF hex: (DO original state)() | C5 hex: (DO original state)() | Switching step

© Siemens AG 2012 All Rights Reserved

C5 hex: End of test
The expected states to be checked depend on the parameterized test mode (p10047).
The following expected states are tested in the test steps when testing the F-DOs:
The display format is as follows:
Test step (SL MA): Expected Diag-DO mode 1 | Expected DI 20 ... 23 mode 2 | Expected DI 20 ... 23 mode 3
(4C hex 57 hex): Diag-DO = 0 V | DI = 24 V | DI = 24 V
(62 hex 6D hex): Diag-DO = 0 V | DI = 0 V | DI = 0 V
(78 hex 83 hex): Diag-DO = 0 V | DI = 0 V | DI = 24 V
(8E hex 99 hex): Diag-DO = 24 V | DI = 0 V | DI = 24 V
(A4 hex AF hex): Diag-DO = 0 V | DI = 24 V | DI = 24 V
Example:
If an error with fault causes bb = 02 hex or 04 hex occurs in a test stop step, the test action for the fault took place in the previous test stop step. The expected states are tested in the next step.
Master signals fault value 0001_04AF and slave signals fault value 0001_04A4.
aaaa = 1 --> F-DO 0 is involved.
bb = 04 hex --> the test of the Diag-DO was unsuccessful.
cc = The expected states were tested in test stop step AF on the master and A4 on the slave.
The expected state Diag-DO = 0 V was checked in the table, i.e. Diag-DO was at 0 V instead of the expected 24 V.
The associated test action took place in the previous step (99 hex DO OFF, A4 hex DO OFF). Both DOs were switched to OFF.

Remedy: Check the wiring of the F-DIs and F-DOs and restart the test stop.
Note:
The fault is withdrawn if the test stop is successfully completed.
For fault value = CCCCCCCC hex, DDDDDDDD hex, EEEEEEEE hex the following applies:
These fault values occur together with fault F35152. In this case, all parameters for the test stop should be checked.
You should also check whether the firmware version of the TM54F matches that of the Control Unit.
You also need to check p10001, p10017, p10046 and p10047.
A POWER ON must be carried out after correcting the parameters.

A35014 TM54F: Test stop required

Message value: -
Drive object: B_INF, TM54F_MA, TM54F_SL, VECTOR_G
Reaction: NONE
Acknowledge: NONE
Cause:
- after powering up the drive, a test stop has still not been carried out.
- a new test stop is required after commissioning.
- the time to carry out the forced checking procedure (test stop) has expired (p10003).

Remedy: Initiate test stop (BI: p10007).

A35015 TM54F: Motor Module replaced or configuration inconsistent

Message value: Fault cause: %1 bin
Drive object: B_INF, TM54F_MA, TM54F_SL, VECTOR_G
Reaction: NONE
Acknowledge: NONE
Cause: Cyclic communication of at least one drive with the Terminal Module 54F (TM54F) is not active.
Possible causes:
- at least one Motor Module was replaced (e.g. hardware was replaced).
- The parameterization of theTM54F (p10010) is inconsistent with the number of axes, which have drive-based motion monitoring functions activated with TM54F.
- For the signaled axis, it is not permissible that the "Safe motion monitoring without selection" (p9601.5 = 1) is parameterized.
- And activated drive has no communication via DRIVE-CLiQ.
- p10010 of the TM54F master module is not the same as p10010 of the TM54F slave module (in this case, F35051 is also output).
- In p10010 of the TM54F master or slave module, the number of a drive object was entered twice or several times.

Fault value (r0949, interpret binary):
yyyy yyyy xxxx xxxx bin
xxxx xxxx bin: inconsistent configuration
Bit 0 = 1: No communication with drive 1.
...
Bit 5 = 1: No communication with drive 6.

© Siemens AG 2012 All Rights Reserved

yyyy yyyy bin: Motor Module replaced or a DRIVE-CLiQ cable of a Motor Module not inserted.
Bit 8 = 1: Motor Module from drive 1 was replaced or does not communicate.
...
Bit 13 = 1: Motor Module from drive 6 was replaced or does not communicate.
Note:
When this fault is present, none of the drives listed in the fault value, which have drive-based motion monitoring functions operating with TM54F, are enabled.
For fault value = 0:
The number of drive objects specified in p10010 is not equal to the number of drives that have drive-based motion monitoring functions that have been enabled.
See also: p10010 (SI drive object assignment)

Remedy: For all drive objects specified in p10010, check whether the drive-based motion monitoring functions with TM54F are enabled (p9601).
Check as to whether F35051 is also output and remove the cause.
Check whether each drive object number is listed only once in the indices of p10010.
Note:
If a drive was deactivated and activated without first having established the DRIVE-CLiQ connection, then this alarm is also output.
When replacing a Motor Module, carry out the following steps:
- start the copy function for the node identifier on the TM54F (p9700 = 1D hex).
- acknowledge the hardware CRC on the TM54F (p9701 = EC hex).
- save all parameters (p0977 = 1).
- carry out a POWER ON (power off/on) for all components.
For SINUMERIK, the following applies:
HMI supports the replacement of components with Safety functions (operating area "Diagnostics" --> Softkey "Alarm list" --> Softkey "Confirm SI HW" etc.).
The precise procedure is given in the following document:
SINUMERIK Function Manual Safety Integrated

A35016 TM54F: Net data communication with drive not established

Message value: -

Drive object: B_INF, TM54F_MA, TM54F_SL, VECTOR_G

Reaction: NONE

Acknowledge: NONE

Cause: The cyclic net data communication within the Terminal Module 54F (TM54F) is still not active.
This message is output after the TM54F master and TM54F slave have booted and is automatically withdrawn as soon as communications have been established.
If a drive does not communicate with the TM54F, then none of the drives parameterized in p10010 are enabled.

Remedy: When replacing a Motor Module, carry out the following steps:
- start the copy function for the node identifier on the TM54F (p9700 = 1D hex).
- acknowledge the hardware CRC on the TM54F (p9701 = EC hex).
- save all parameters (p0977 = 1).
- carry out a POWER ON (power off/on) for all components.
The following always applies:
- for all drive objects specified in p10010, check whether the drive-based motion monitoring functions with TM54F are enabled (p9601).
- check whether fault F35150 is present and if required, remove the cause of the fault.
See also: r10055 (SI TM54F communication status drive-specific)

F35040 TM54F: 24 V undervoltage

Message value: Fault cause: %1 bin

Drive object: B_INF, TM54F_MA, TM54F_SL, VECTOR_G

Reaction: NONE

Acknowledge: IMMEDIATELY

Cause: For the 24 V power supply for the Terminal Module 54F (TM54F) an undervoltage condition was detected.
As fault response fail-safe input terminal signals are transferred to the motion monitoring functions.
Fault value (r0949, interpret binary):
Bit 0 = 1: Power supply undervoltage at connection X524.
Bit 1 = 1: Power supply undervoltage at connection X514.

Remedy: - check the 24 V DC power supply for the TM54F.
- carry out safe acknowledgement (p10006).

© Siemens AG 2012 All Rights Reserved

F35043 TM54F: 24 V overvoltage

Message value: -

Drive object: B_INF, TM54F_MA, TM54F_SL, VECTOR_G

Reaction: NONE

Acknowledge: IMMEDIATELY

Cause: For the 24 V power supply for the Terminal Module 54F (TM54F) an overvoltage condition was detected.
As fault response fail-safe input terminal signals are transferred to the motion monitoring functions.

Remedy: - check the 24 V DC power supply for the TM54F.
- carry out safe acknowledgement (p10006).

F35051 TM54F: Defect in a monitoring channel

Message value: %1

Drive object: B_INF, TM54F_MA, TM54F_SL, VECTOR_G

Reaction: NONE

Acknowledge: IMMEDIATELY

Cause: The Terminal Module 54F (TM54F) has identified an error in the crosswise data comparison between the two control channels.
As fault response fail-safe input terminal signals are transferred to the motion monitoring functions.
Fault value (r0949, interpret hexadecimal):
aaaabbcc hex
aaaa: A value greater than zero indicates an internal software error.
bb: Data to be cross-compared that resulted in the error.
bb = 00 hex: p10000
bb = 01 hex: p10001
bb = 02 hex: p10002
bb = 03 hex: p10006
bb = 04 hex: p10008
bb = 05 hex: p10010
bb = 06 hex: p10011
bb = 07 hex: p10020
bb = 08 hex: p10021
bb = 09 hex: p10022
bb = 0A hex: p10023
bb = 0B hex: p10024
bb = 0C hex: p10025
bb = 0D hex: p10026
bb = 0E hex: p10027
bb = 0F hex: p10028
bb = 10 hex: p10036
bb = 11 hex: p10037
bb = 12 hex: p10038
bb = 13 hex: p10039
bb = 14 hex: p10040
bb = 15 hex: p10041
bb = 16 hex: p10042
bb = 17 hex: p10043
bb = 18 hex: p10044
bb = 19 hex: p10045
bb = 1A hex: p10046
bb = 1B hex: Test stop internal p10041
bb = 1C hex: Test stop internal p10046
bb = 1D ... 1F hex: internal test stop p10017, p10002, p10000
bb = 20 ... 2A hex: internal test stop p10040, p10046, p10047
bb = 2B hex: Test stop initialization
bb = 2C hex: Input/output calculation initialization
bb = 2D ... 45 hex: internal data for the output calculation p10042 ... p10045
bb = 46 ... 63 hex: data for the calculation of drive group 1
bb = 64 ... 81 hex: data for the calculation of drive group 2
bb = 82 ... 9F hex: data for the calculation of drive group 3
bb = A0 ... BD hex: data for the calculation of the drive group 4
bb = BE hex: debounce time of the fail-safe inputs (F-DI) p10017

© Siemens AG 2012 All Rights Reserved

bb = BF hex: debounce time of the single-channel inputs (DI) p10017
bb = C0 hex: debounce time of the Diag inputs p10017
bb = C1 hex: Internal data to p10030 SDI positive
bb = C2 hex: Internal data to p10031 SDI negative
bb = C3 ... CA hex: new data to calculate the drive groups p10030 ... p10031
bb = CB hex: p10032
bb = CC hex: p10033
bb = CD hex: p10009
bb = CE ... CF drive group 1 SLP parameter p10032 ... p10033
bb = D0 ... D1 drive group 2 SLP parameter p10032 ... p10033
bb = D2 ... D3 drive group 3 SLP parameter p10032 ... p10033
bb = D4 ... D5 drive group 4 SLP parameter p10032 ... p10033
bb = D6 initialize retraction
bb = D7 retraction, SLP
cc: Index of the data to be cross-compared that resulted in the error.

Remedy: Carry out the following steps on the TM54F:
- activate the safety commissioning mode (p0010 = 95).
- start the copy function for SI parameters (p9700 = 57 hex).
- acknowledge complete data change (p9701 = AC hex).
- exit the safety commissioning mode (p0010 = 0).
- save all parameters (p0977 = 1).
- carry out safe acknowledgement (p10006).

For an internal software error (aaaa > 0):
- For TM54F, upgrade the firmware to a later version.
- contact the Hotline.
- replace the TM54F.

F35052 (A) TM54F: Internal hardware error

Message value: %1
Drive object: B_INF, TM54F_MA, TM54F_SL, VECTOR_G
Reaction: NONE
Acknowledge: IMMEDIATELY (POWER ON)
Cause: An internal software/hardware error has been detected on the Terminal Module 54F (TM54F).
Fault value (r0949, interpret decimal):
Only for internal Siemens troubleshooting.
Remedy:
- check the electrical cabinet design and cable routing for EMC compliance
- upgrade TM54F firmware to more recent version.
- contact the Hotline.
- replace the TM54F.

Reaction upon A: NONE
Acknowl. upon A: NONE

F35053 TM54F: Temperature fault threshold exceeded

Message value: %1
Drive object: B_INF, TM54F_MA, TM54F_SL, VECTOR_G
Reaction: NONE
Acknowledge: IMMEDIATELY
Cause: The temperature measured using the temperature sensing on the TM54F has exceeded the threshold value to initiate this fault.
As fault response fail-safe input terminal signals are transferred to the motion monitoring functions.
Fault value (r0949, interpret decimal):
Only for internal Siemens troubleshooting.
Remedy:
- allow the TM54F to cool down.
- carry out safe acknowledgement (p10006).

© Siemens AG 2012 All Rights Reserved

A35054 TM54F: Temperature alarm threshold exceeded

Message value: %1

Drive object: B_INF, TM54F_MA, TM54F_SL, VECTOR_G

Reaction: NONE

Acknowledge: NONE

Cause: The temperature measured using the temperature sensing on the TM54F has exceeded the threshold value to initiate this alarm.

Remedy: - allow the TM54F to cool down.
- carry out safe acknowledgement (p10006).

A35075 (F) TM54F: Error during internal communication

Message value: %1

Drive object: B_INF, TM54F_MA, TM54F_SL, VECTOR_G

Reaction: NONE

Acknowledge: NONE

Cause: An internal communications error has occurred in the Terminal Module 54F (TM54F).
This alarm is also output:
- If TM54F exists and no safety function of the TM54F has yet been parameterized.
- If p10000 of the TM54F master is not set the same as p10000 of the TM54F slave.
Alarm value (r2124, interpret decimal):
Only for internal Siemens diagnostics.

Remedy: If TM54F exists and no safety function has yet been parameterized:
- Not necessary. The alarm disappears automatically after a safety function of the TM54F has been parameterized.
For p10010 from the TM54F master not equal to the TM54F slave:
- start the copy function for the node identifier on the TM54F (p9700 = 1D hex).
- acknowledge the hardware CRC on the TM54F (p9701 = EC hex).
- save all parameters (p0977 = 1).
- carry out a POWER ON (power off/on) for all components.
For internal communication errors:
- check the electrical cabinet design and cable routing for EMC compliance
- upgrade the software on the TM54F.
- contact the Hotline.
- replace the TM54F.

Reaction upon F: NONE

Acknowl. upon F: IMMEDIATELY (POWER ON)

A35080 (F) TM54F: Checksum error safety parameters

Message value: %1

Drive object: B_INF, TM54F_MA, TM54F_SL, VECTOR_G

Reaction: NONE

Acknowledge: NONE

Cause: The calculated checksum entered in r10004 over the safety-relevant parameters does not match the reference checksum saved in p10005 at the last machine acceptance.
Fault value (r0949, interpret binary):
Bit 0 = 1: Checksum error for functional SI parameters.
Bit 1 = 1: Checksum error for SI parameters for component assignment.

Remedy: - check the safety-relevant parameters and if required, correct.
- set the reference checksum to the actual checksum.
- acknowledge the hardware replacement.
- carry out a POWER ON (power off/on).
- carry out an acceptance test.

Reaction upon F: NONE

Acknowl. upon F: IMMEDIATELY (POWER ON)

© Siemens AG 2012 All Rights Reserved

A35081 (F) TM54F: Static (steady state) 1 signal at the F-DI for safety-relevant acknowledgement

Message value: -

Drive object: B_INF, TM54F_MA, TM54F_SL, VECTOR_G

Reaction: NONE

Acknowledge: NONE

Cause: A logical 1 signal is present at the F-DI configured in p10006 for more than 10 seconds.
If, at the F-DI no acknowledgment was performed for safe acknowledgment, then a steady-state logical and 0 signal must be present. This avoids unintentional safety-relevant acknowledgement (or the "Internal Event Acknowledge" signal) if a wire breaks or one of the two digital inputs bounces.

Remedy: Set the fail-safe digital input (F-DI) to a logical 0 signal (p10006).
Note:
F-DI: Failsafe Digital Input

Reaction upon F: NONE

Acknowl. upon F: IMMEDIATELY

F35150 TM54F: Communication error

Message value: %1

Drive object: B_INF, TM54F_MA, TM54F_SL, VECTOR_G

Reaction: NONE

Acknowledge: IMMEDIATELY (POWER ON)

Cause: A communication error between the TM54F master and Control Unit or between the TM54F slave and the Motor Module was detected.
Fault value (r0949, interpret hexadecimal):
Only for internal Siemens troubleshooting.

Remedy: When replacing a Motor Module, carry out the following steps:
- start the copy function for the node identifier on the TM54F (p9700 = 1D hex).
- acknowledge the hardware CRC on the TM54F (p9701 = EC hex).
- save all parameters (p0977 = 1).
- carry out a POWER ON (power off/on) for all components.
The following always applies:
- check the electrical cabinet design and cable routing for EMC compliance
- upgrade the software on the TM54F.
- contact the Hotline.
- replace the TM54F.

F35151 TM54F: Discrepancy error

Message value: %1

Drive object: B_INF, TM54F_MA, TM54F_SL, VECTOR_G

Reaction: NONE

Acknowledge: IMMEDIATELY

Cause: The safety input terminals or output terminals show a different state longer than that parameterized in p10002.
Fault value (r0949, interpret hexadecimal):
yyyyxxxx hex
xxxx: The safety-relevant input terminals F-DI indicate a discrepancy.
Bit 0: Discrepancy for F-DI 0
...
Bit 9: Discrepancy for F-DI 9
yyyy: The safety-relevant output terminals F-DO indicate a discrepancy.
Bit 0: Discrepancy for F-DO 0
...
Bit 3: Discrepancy for F-DO 3
Note:
If several discrepancy errors occur consecutively, then this fault is only signaled for the first error that occurs.
The following options are available to analyze all of the discrepancy errors:
- Using the commissioning software, evaluate the input states and output states of the TM54F. All discrepancy errors are displayed here.
- Compare parameters p10051 and p10052 from the TM54F master and TM54F slave for discrepancy.

© Siemens AG 2012 All Rights Reserved

Remedy: Check the wiring of the corresponding F-DI (contact problems).
Discrepancy errors in the fail-safe digital inputs (F-DI) can only be completely acknowledged if, after the cause of the error was resolved, safe acknowledgement was carried out (see p10006). As long as safety acknowledgement was not carried out, the corresponding F-DI stays in the safe state internally.
For cyclic switching operations at the fail-safe digital inputs (F-DI), it may be necessary to adapt the discrepancy time to the switching frequency:
If the period of a cyclic switching pulse has the order of magnitude of double the value of p10002, then the following formulas must be checked.
p10002 < (tp / 2) - td (discrepancy time must be less than half the period minus the actual discrepancy time)
p10002 >= p10000 (discrepancy time must be no less than p10000)
p10002 > td (discrepancy time must be greater than the switch discrepancy time which may actually apply)
td: possible actual discrepancy time (in ms) that can occur with a switching operation. This must correspond to at least 1 SI sampling cycle (see p10000).
tp: period for a switching operation in ms.
For cyclic switching operations and when debounce (p10017) is active, the discrepancy time is directly specified by the debounce time.
If the period of a cyclic switching pulse has the order of magnitude of twice the debounce time, then the following formulas should be checked.
p10002 < p10017 + 1ms - td
p10002 > td
p10002 >= p10000
Example:
If the SI sampling cycle is 12 ms and the switching frequency is 110 ms (p10017 = 0), the maximum discrepancy time which can be set is as follows:
p10002 <= 110/2 ms - 12 ms = 43 ms --> rounded-off, the following is obtained p10002 <= 36 ms
Since the discrepancy time can only be accepted as a whole SI sampling time, the value will need to be rounded up or down to a whole SI sampling time value if it is not an exact integer multiple of an SI sampling time.
F-DI: Failsafe Digital Input
F-DO: Failsafe Digital Output

F35152 TM54F: Internal software error

Message value: %1

Drive object: B_INF, TM54F_MA, TM54F_SL, VECTOR_G

Reaction: NONE

Acknowledge: IMMEDIATELY

Cause: An internal software error has occurred in the Terminal Module 54F (TM54F).
The fail-safe digital inputs and digital outputs (F-DI, F-DO) on the TM54F have been set to the safe state.
Fault value (r0949, interpret decimal):
Only for internal Siemens troubleshooting.
Note:
F-DI: Failsafe Digital Input
F-DO: Failsafe Digital Output

Remedy: Check that the firmware version of the TM54F matches the Control Unit's firmware version.
The automatic firmware update must be activated in the project.
Note:
This signal will also appear, for example, in conjunction with fault F35013. In this case you should check all the parameters for the test stop on the TM54F (p10001, p10003, p10007, p10041, p10046, p10047). In this case, a POWER ON is required after the parameters have been corrected.

A35200 (F, N) TM: Calibration data

Message value: %1

Drive object: B_INF, TM150, TM31, VECTOR_G

Reaction: NONE

Acknowledge: NONE

Cause: An error was detected in the calibration data of the Terminal Module.
Alarm value (r2124, interpret decimal):
ddcbaa dec: dd = component number, c = AI/AO, b = fault type, aa = number
c = 0: analog input (AI, Analog Input)
c = 1: analog output (AO, Analog Output)
b = 0: No calibration data available.
b = 1: Offset too high (> 100 mV).

© Siemens AG 2012 All Rights Reserved

Remedy: - carry out a POWER ON (power off/on) for all components.
- Replace the component if necessary.

Reaction upon F: NONE

Acknowl. upon F: IMMEDIATELY (POWER ON)

Reaction upon N: NONE

Acknowl. upon N: NONE

F35207 (N, A) TM: Temperature fault/alarm threshold channel 0 exceeded

Message value: %1

Drive object: B_INF, TM150, TM31, VECTOR_G

Reaction: Infeed: OFF2 (NONE, OFF1)
Vector: OFF2 (NONE, OFF1, OFF3)

Acknowledge: IMMEDIATELY (POWER ON)

Cause: For the temperature evaluation via the Terminal Module (TM), at least one of the following conditions to initiate this fault is fulfilled:
- alarm threshold has been exceeded longer than that set in the timer (p4102[0], p4103[0]).
or
- fault threshold exceeded (p4102[1]).
Note:
For sensor type "PTC thermistor" and "Bimetallic NC contact" (p4100[0] = 1, 4), the following applies:
- if r4101[0] > 1650 ohms, the temperature r4105[0] = 250 °C
- if r4101[0] <= 1650 ohms, the temperature r4105[0] = -50 °C
The temperature actual value is displayed via connector output r4105[0] and can be interconnected.
Notice:
This fault only causes the drive to shut down if there is at least one BICO interconnection between the drive and the Terminal Module.
Fault value (r0949, interpret decimal):
Temperature actual value at the time of initiation [0.1 °C].

Remedy: - allow the temperature sensor to cool down to below p4102[1] - hysteresis (5 K, for TM150, can be set using p4118[0]).
- if required, set the fault response to NONE (p2100, p2101).
See also: p4102

Reaction upon N: NONE

Acknowl. upon N: NONE

Reaction upon A: NONE

Acknowl. upon A: NONE

F35208 (N, A) TM: Temperature fault/alarm threshold channel 1 exceeded

Message value: %1

Drive object: B_INF, TM150, VECTOR_G

Reaction: Infeed: OFF2 (NONE, OFF1)
Vector: OFF2 (NONE, OFF1, OFF3)

Acknowledge: IMMEDIATELY (POWER ON)

Cause: For the temperature evaluation via the Terminal Module (TM), at least one of the following conditions to initiate this fault is fulfilled:
- alarm threshold has been exceeded longer than that set in the timer (p4102[2], p4103[1]).
or
- fault threshold exceeded (p4102[3]).
Note:
For sensor type "PTC thermistor" and "Bimetallic NC contact" (p4100[1] = 1, 4), the following applies:
- if r4101[1] > 1650 ohms, the temperature r4105[1] = 250 °C
- if r4101[1] <= 1650 ohms, the temperature r4105[1] = -50 °C
The temperature actual value is displayed via connector output r4105[1] and can be interconnected.
Notice:
This fault only causes the drive to shut down if there is at least one BICO interconnection between the drive and the Terminal Module.
Fault value (r0949, interpret decimal):
Temperature actual value at the time of initiation [0.1 °C].

© Siemens AG 2012 All Rights Reserved

Remedy: - allow the temperature sensor to cool down to below p4102[3] - hysteresis (5 K, for TM150, can be set using p4118[1]).
- if required, set the fault response to NONE (p2100, p2101).
See also: p4102

Reaction upon N: NONE
Acknowl. upon N: NONE
Reaction upon A: NONE
Acknowl. upon A: NONE

F35209 (N, A) TM: Temperature fault/alarm threshold channel 2 exceeded

Message value: %1
Drive object: B_INF, TM150, VECTOR_G
Reaction: Infeed: OFF2 (NONE, OFF1)
Vector: OFF2 (NONE, OFF1, OFF3)
Acknowledge: IMMEDIATELY (POWER ON)
Cause: For the temperature evaluation via the Terminal Module (TM), at least one of the following conditions to initiate this fault is fulfilled:
- alarm threshold has been exceeded longer than that set in the timer (p4102[4], p4103[2]).
or
- fault threshold exceeded (p4102[5]).
Note:
For sensor type "PTC thermistor" and "Bimetallic NC contact" (p4100[2] = 1, 4), the following applies:
- if r4101[2] > 1650 ohms, the temperature r4105[2] = 250 °C
- if r4101[2] <= 1650 ohms, the temperature r4105[2] = -50 °C
The temperature actual value is displayed via connector output r4105[2] and can be interconnected.
Notice:
This fault only causes the drive to shut down if there is at least one BICO interconnection between the drive and the Terminal Module.
Fault value (r0949, interpret decimal):
Temperature actual value at the time of initiation [0.1 °C].
Remedy: - allow the temperature sensor to cool down to below p4102[5] - hysteresis (5 K, for TM150, can be set using p4118[2]).
- if required, set the fault response to NONE (p2100, p2101).
See also: p4102

Reaction upon N: NONE
Acknowl. upon N: NONE
Reaction upon A: NONE
Acknowl. upon A: NONE

F35210 (N, A) TM: Temperature fault/alarm threshold channel 3 exceeded

Message value: %1
Drive object: B_INF, TM150, VECTOR_G
Reaction: Infeed: OFF2 (NONE, OFF1)
Vector: OFF2 (NONE, OFF1, OFF3)
Acknowledge: IMMEDIATELY (POWER ON)
Cause: For the temperature evaluation via the Terminal Module (TM), at least one of the following conditions to initiate this fault is fulfilled:
- alarm threshold has been exceeded longer than that set in the timer (p4102[6], p4103[3]).
or
- fault threshold exceeded (p4102[7]).
Note:
For sensor type "PTC thermistor" and "Bimetallic NC contact" (p4100[3] = 1, 4), the following applies:
- if r4101[3] > 1650 ohms, the temperature r4105[3] = 250 °C
- if r4101[3] <= 1650 ohms, the temperature r4105[3] = -50 °C
The temperature actual value is displayed via connector output r4105[3] and can be interconnected.
Notice:
This fault only causes the drive to shut down if there is at least one BICO interconnection between the drive and the Terminal Module.

© Siemens AG 2012 All Rights Reserved

Fault value (r0949, interpret decimal):
Temperature actual value at the time of initiation [0.1 °C].

Remedy: - allow the temperature sensor to cool down to below p4102[7] - hysteresis (5 K, for TM150, can be set using p4118[3]).
- if required, set the fault response to NONE (p2100, p2101).
See also: p4102

Reaction upon N: NONE
Acknowl. upon N: NONE
Reaction upon A: NONE
Acknowl. upon A: NONE

A35211 (F, N) TM: Temperature alarm threshold channel 0 exceeded

Message value: %1
Drive object: B_INF, TM150, TM31, VECTOR_G
Reaction: NONE
Acknowledge: NONE
Cause: The temperature measured using the temperature sensing of the Terminal Module (TM) (r4105[0]) has exceeded the threshold value to initiate this alarm (p4102[0]).
Note:
For sensor type "PTC thermistor" and "Bimetallic NC contact" (p4100[0] = 1, 4), the following applies:
- if r4101[0] > 1650 ohms, the temperature r4105[0] = 250 °C
- if r4101[0] <= 1650 ohms, the temperature r4105[0] = -50 °C
Alarm value (r2124, interpret decimal):
Temperature actual value at the time of initiation [0.1 °C].

Remedy: - allow the temperature sensor to cool down to below p4102[0] - hysteresis (5 K); for TM150, can be set using p4118[0].
See also: p4102

Reaction upon F: NONE
Acknowl. upon F: IMMEDIATELY (POWER ON)
Reaction upon N: NONE
Acknowl. upon N: NONE

A35212 (F, N) TM: Temperature alarm threshold channel 1 exceeded

Message value: %1
Drive object: B_INF, TM150, VECTOR_G
Reaction: NONE
Acknowledge: NONE
Cause: The temperature measured using the temperature sensing of the Terminal Module (TM) (r4105[1]) has exceeded the threshold value to initiate this alarm (p4102[2]).
Note:
For sensor type "PTC thermistor" and "Bimetallic NC contact" (p4100[1] = 1, 4), the following applies:
- if r4101[1] > 1650 ohms, the temperature r4105[1] = 250 °C
- if r4101[1] <= 1650 ohms, the temperature r4105[1] = -50 °C
Alarm value (r2124, interpret decimal):
Temperature actual value at the time of initiation [0.1 °C].

Remedy: - allow the temperature sensor to cool down to below p4102[4] - hysteresis (5 K); for TM150, can be set using p4118[1].
See also: p4102

Reaction upon F: NONE
Acknowl. upon F: IMMEDIATELY (POWER ON)
Reaction upon N: NONE
Acknowl. upon N: NONE

© Siemens AG 2012 All Rights Reserved

A35213 (F, N) TM: Temperature alarm threshold channel 2 exceeded

Message value: %1

Drive object: B_INF, TM150, VECTOR_G

Reaction: NONE

Acknowledge: NONE

Cause: The temperature measured using the temperature sensing of the Terminal Module (TM) (r4105[2]) has exceeded the threshold value to initiate this alarm (p4102[4]).
Note:
For sensor type "PTC thermistor" and "Bimetallic NC contact" (p4100[2] = 1, 4), the following applies:
- if r4101[2] > 1650 ohms, the temperature r4105[2] = 250 °C
- if r4101[2] <= 1650 ohms, the temperature r4105[2] = -50 °C
Alarm value (r2124, interpret decimal):
Temperature actual value at the time of initiation [0.1 °C].

Remedy: - allow the temperature sensor to cool down to below p4102[4] - hysteresis (5 K); for TM150, can be set using p4118[2].
See also: p4102

Reaction upon F: NONE

Acknowl. upon F: IMMEDIATELY (POWER ON)

Reaction upon N: NONE

Acknowl. upon N: NONE

A35214 (F, N) TM: Temperature alarm threshold channel 3 exceeded

Message value: %1

Drive object: B_INF, TM150, VECTOR_G

Reaction: NONE

Acknowledge: NONE

Cause: The temperature measured using the temperature sensing of the Terminal Module (TM) (r4105[3]) has exceeded the threshold value to initiate this alarm (p4102[6]).
Note:
For sensor type "PTC thermistor" and "Bimetallic NC contact" (p4100[3] = 1, 4), the following applies:
- if r4101[3] > 1650 ohms, the temperature r4105[3] = 250 °C
- if r4101[3] <= 1650 ohms, the temperature r4105[3] = -50 °C
Alarm value (r2124, interpret decimal):
Temperature actual value at the time of initiation [0.1 °C].

Remedy: - allow the temperature sensor to cool down to below p4102[6] - hysteresis (5 K); for TM150, can be set using p4118[3].
See also: p4102

Reaction upon F: NONE

Acknowl. upon F: IMMEDIATELY (POWER ON)

Reaction upon N: NONE

Acknowl. upon N: NONE

F35220 (N, A) TM: Frequency limit reached for signal output

Message value: -

Drive object: B_INF, TM31, VECTOR_G

Reaction: Infeed: OFF1 (NONE, OFF2)
Vector: OFF1 (NONE, OFF2, OFF3)

Acknowledge: IMMEDIATELY (POWER ON)

Cause: The signals output from the Terminal Module 41 (TM41) for tracks A/B have reached the limit frequency. The output signals are no longer in synchronism with the specified setpoint.
Note:
If with SIMOTION the TM41 has been configured as the technology project, this fault is also output in response to short-circuited A/B signals in X520.

Remedy: SIMOTION (p4400 = 0) operating mode:
- enter a lower speed setpoint (p1155).
- reduce the encoder pulse number (p0408).
- check track A/B for short-circuits.

© Siemens AG 2012 All Rights Reserved

SINAMICS (p4400 = 1) operating mode:
- the fine resolution of TM41 in p0418 does not match that of the connector input that was interconnected at P4420
- the encoder position actual value r0479 interconnected at connector input p4420 has an excessively high actual speed

Reaction upon N: NONE
Acknowl. upon N: NONE
Reaction upon A: NONE
Acknowl. upon A: NONE

F35221 (N, A) TM: Setpoint - actual value deviation, outside the tolerance range

Message value: -
Drive object: B_INF, TM31, VECTOR_G
Reaction: Infeed: OFF1 (NONE, OFF2)
Vector: OFF1 (NONE, OFF2, OFF3)
Acknowledge: IMMEDIATELY (POWER ON)
Cause: The deviation between the setpoint and the output signals (track A/B) exceeds the tolerance of +/-3 %. The deviation between the internal and external measured value is too high.
Remedy: - reduce the basic clock cycle (p0110, p0111).
- replace the module.

Reaction upon N: NONE
Acknowl. upon N: NONE
Reaction upon A: NONE
Acknowl. upon A: NONE

A35222 (F, N) TM: Encoder pulse number not permissible

Message value: %1
Drive object: B_INF, TM31, VECTOR_G
Reaction: NONE
Acknowledge: NONE
Cause: The encoder pulse number entered does not match the permissible pulse number from a hardware perspective.
Fault value (r0949, interpret decimal):
1: Encoder pulse number is too high.
2: Encoder pulse number is too low.
4: Encoder pulse number is less than the zero mark offset (p4426).
Remedy: - enter the encoder pulse number in the permissible range (p0408).
- if necessary, replace TM41 SAC with TM41 DAC.
Note:
TM41 SAC: order no. = 6SL3055-0AA00-3PA0
TM41 DAC: order no. = 6SL3055-0AA00-3PA1
The following applies for TM41 SAC:
- minimum/maximum value for p0408: 1000/8192
The following applies for TM41 DAC:
- minimum/maximum value for p0408: 1000/16384
See also: p0408 (Rotary encoder pulse No.)

Reaction upon F: Infeed: OFF1 (NONE, OFF2)
Vector: OFF1 (NONE, OFF2, OFF3)
Acknowl. upon F: IMMEDIATELY (POWER ON)
Reaction upon N: NONE
Acknowl. upon N: NONE

A35223 (F, N) TM: Zero mark offset not permissible

Message value: %1
Drive object: B_INF, TM31, VECTOR_G
Reaction: NONE
Acknowledge: NONE
Cause: The entered zero mark offset is not permissible.

© Siemens AG 2012 All Rights Reserved

Fault value (r0949, interpret decimal):
1: Zero mark offset is too high.

Remedy: Enter the zero mark offset in the permissible range (p4426).

Reaction upon F: Infeed: OFF1 (NONE, OFF2)
Vector: OFF1 (NONE, OFF2, OFF3)

Acknowl. upon F: IMMEDIATELY (POWER ON)

Reaction upon N: NONE

Acknowl. upon N: NONE

F35230 TM: Hardware fault

Message value: %1

Drive object: B_INF, TM150, TM31, VECTOR_G

Reaction: Infeed: OFF1 (NONE, OFF2)
Vector: NONE

Acknowledge: POWER ON

Cause: The Terminal Module (TM) used has signaled internal errors.
Signals from this module may not be evaluated because they are very likely to be incorrect.

Remedy: If required, replace the Terminal Module.

F35233 DRIVE-CLiQ component does not support function

Message value: %1

Drive object: B_INF, TM150, TM31, VECTOR_G

Reaction: OFF2

Acknowledge: IMMEDIATELY

Cause: A function requested by the Control Unit is not supported by a DRIVE-CLiQ component.
Fault value (r0949, interpret decimal):
1: Terminal Module 31 does not support the function "Timer for temperature evaluation" (X522.7/8, p4103 > 0.000).
4: The improved actual value resolution is not supported (p4401.4).
5: The improved setpoint resolution is not supported (p4401.5).
6: The residual value handling in the setpoint channel cannot be deactivated (p4401.6).
7: Output frequencies greater than 750 kHz cannot be activated (p4401.7).

Remedy: For fault value = 1:
- De-activate timer for temperature evaluation (X522.7/8) (p4103 = 0.000).
- Use Terminal Module 31 and the relevant firmware version to enable the "Timer for temperature evaluation" function (Order No. 6SL3055-0AA00-3AA1, firmware version 2.6 and higher).
See also: p4103

F35400 (N, A) TM: Temperature fault/alarm threshold channel 4 exceeded

Message value: %1

Drive object: B_INF, TM150, VECTOR_G

Reaction: Infeed: OFF2 (NONE, OFF1)
Vector: OFF2 (NONE, OFF1, OFF3)

Acknowledge: IMMEDIATELY (POWER ON)

Cause: For the temperature evaluation via the Terminal Module 150 (TM150), at least one of the following conditions to initiate this fault is fulfilled:
- alarm threshold has been exceeded longer than that set in the timer (p4102[8], p4103[4]).
or
- fault threshold exceeded (p4102[9]).
Note:
For sensor type "PTC thermistor" and "Bimetallic NC contact" (p4100[4] = 1, 4), the following applies:
- if r4101[4] > 1650 ohms, the temperature r4105[4] = 250 °C
- if r4101[4] <= 1650 ohms, the temperature r4105[4] = -50 °C
The temperature actual value is displayed via connector output r4105[4] and can be interconnected.
Notice:
This fault only causes the drive to shut down if there is at least one BICO interconnection between the drive and the Terminal Module.
Fault value (r0949, interpret decimal):
Temperature actual value at the time of initiation [0.1 °C].

© Siemens AG 2012 All Rights Reserved

Remedy: - allow the temperature sensor to cool down to below p4102[9] - hysteresis (p4118[4]).
- if required, set the fault response to NONE (p2100, p2101).
See also: p4102

Reaction upon N: NONE
Acknowl. upon N: NONE
Reaction upon A: NONE
Acknowl. upon A: NONE

F35401 (N, A) TM: Temperature fault/alarm threshold channel 5 exceeded

Message value: %1
Drive object: B_INF, TM150, VECTOR_G
Reaction: Infeed: OFF2 (NONE, OFF1)
Vector: OFF2 (NONE, OFF1, OFF3)
Acknowledge: IMMEDIATELY (POWER ON)
Cause: For the temperature evaluation via the Terminal Module 150 (TM150), at least one of the following conditions to initiate this fault is fulfilled:
- alarm threshold has been exceeded longer than that set in the timer (p4102[10], p4103[5]).
or
- fault threshold exceeded (p4102[11]).
Note:
For sensor type "PTC thermistor" and "Bimetallic NC contact" (p4100[5] = 1, 4), the following applies:
- if r4101[5] > 1650 ohms, the temperature r4105[5] = 250 °C
- if r4101[5] <= 1650 ohms, the temperature r4105[5] = -50 °C
The temperature actual value is displayed via connector output r4105[5] and can be interconnected.
Notice:
This fault only causes the drive to shut down if there is at least one BICO interconnection between the drive and the Terminal Module.
Fault value (r0949, interpret decimal):
Temperature actual value at the time of initiation [0.1 °C].
Remedy: - allow the temperature sensor to cool down to below p4102[11] - hysteresis (p4118[5]).
- if required, set the fault response to NONE (p2100, p2101).
See also: p4102

Reaction upon N: NONE
Acknowl. upon N: NONE
Reaction upon A: NONE
Acknowl. upon A: NONE

F35402 (N, A) TM: Temperature fault/alarm threshold channel 6 exceeded

Message value: %1
Drive object: B_INF, TM150, VECTOR_G
Reaction: Infeed: OFF2 (NONE, OFF1)
Vector: OFF2 (NONE, OFF1, OFF3)
Acknowledge: IMMEDIATELY (POWER ON)
Cause: For the temperature evaluation via the Terminal Module 150 (TM150), at least one of the following conditions to initiate this fault is fulfilled:
- alarm threshold has been exceeded longer than that set in the timer (p4102[12], p4103[6]).
or
- fault threshold exceeded (p4102[13]).
Note:
For sensor type "PTC thermistor" and "Bimetallic NC contact" (p4100[6] = 1, 4), the following applies:
- if r4101[6] > 1650 ohms, the temperature r4105[6] = 250 °C
- if r4101[6] <= 1650 ohms, the temperature r4105[6] = -50 °C
The temperature actual value is displayed via connector output r4105[6] and can be interconnected.
Notice:
This fault only causes the drive to shut down if there is at least one BICO interconnection between the drive and the Terminal Module.
Fault value (r0949, interpret decimal):
Temperature actual value at the time of initiation [0.1 °C].

© Siemens AG 2012 All Rights Reserved

Remedy: - allow the temperature sensor to cool down to below p4102[13] - hysteresis (p4118[6]).
- if required, set the fault response to NONE (p2100, p2101).
See also: p4102

Reaction upon N: NONE
Acknowl. upon N: NONE
Reaction upon A: NONE
Acknowl. upon A: NONE

F35403 (N, A) TM: Temperature fault/alarm threshold channel 7 exceeded

Message value: %1
Drive object: B_INF, TM150, VECTOR_G
Reaction: Infeed: OFF2 (NONE, OFF1)
Vector: OFF2 (NONE, OFF1, OFF3)
Acknowledge: IMMEDIATELY (POWER ON)
Cause: For the temperature evaluation via the Terminal Module 150 (TM150), at least one of the following conditions to initiate this fault is fulfilled:
- alarm threshold has been exceeded longer than that set in the timer (p4102[14], p4103[7]).
or
- fault threshold exceeded (p4102[15]).
Note:
For sensor type "PTC thermistor" and "Bimetallic NC contact" (p4100[7] = 1, 4), the following applies:
- if r4101[7] > 1650 ohms, the temperature r4105[7] = 250 °C
- if r4101[7] <= 1650 ohms, the temperature r4105[7] = -50 °C
The temperature actual value is displayed via connector output r4105[7] and can be interconnected.
Notice:
This fault only causes the drive to shut down if there is at least one BICO interconnection between the drive and the Terminal Module.
Fault value (r0949, interpret decimal):
Temperature actual value at the time of initiation [0.1 °C].
Remedy: - allow the temperature sensor to cool down to below p4102[15] - hysteresis (p4118[7]).
- if required, set the fault response to NONE (p2100, p2101).
See also: p4102

Reaction upon N: NONE
Acknowl. upon N: NONE
Reaction upon A: NONE
Acknowl. upon A: NONE

F35404 (N, A) TM: Temperature fault/alarm threshold channel 8 exceeded

Message value: %1
Drive object: B_INF, TM150, VECTOR_G
Reaction: Infeed: OFF2 (NONE, OFF1)
Vector: OFF2 (NONE, OFF1, OFF3)
Acknowledge: IMMEDIATELY (POWER ON)
Cause: For the temperature evaluation via the Terminal Module 150 (TM150), at least one of the following conditions to initiate this fault is fulfilled:
- alarm threshold has been exceeded longer than that set in the timer (p4102[16], p4103[8]).
or
- fault threshold exceeded (p4102[17]).
Note:
For sensor type "PTC thermistor" and "Bimetallic NC contact" (p4100[8] = 1, 4), the following applies:
- if r4101[8] > 1650 ohms, the temperature r4105[8] = 250 °C
- if r4101[8] <= 1650 ohms, the temperature r4105[8] = -50 °C
The temperature actual value is displayed via connector output r4105[8] and can be interconnected.
Notice:
This fault only causes the drive to shut down if there is at least one BICO interconnection between the drive and the Terminal Module.
Fault value (r0949, interpret decimal):
Temperature actual value at the time of initiation [0.1 °C].

© Siemens AG 2012 All Rights Reserved

Remedy: - allow the temperature sensor to cool down to below p4102[17] - hysteresis (p4118[8]).
- if required, set the fault response to NONE (p2100, p2101).
See also: p4102

Reaction upon N: NONE
Acknowl. upon N: NONE
Reaction upon A: NONE
Acknowl. upon A: NONE

F35405 (N, A) TM: Temperature fault/alarm threshold channel 9 exceeded

Message value: %1
Drive object: B_INF, TM150, VECTOR_G
Reaction: Infeed: OFF2 (NONE, OFF1)
Vector: OFF2 (NONE, OFF1, OFF3)
Acknowledge: IMMEDIATELY (POWER ON)
Cause: For the temperature evaluation via the Terminal Module 150 (TM150), at least one of the following conditions to initiate this fault is fulfilled:
- alarm threshold has been exceeded longer than that set in the timer (p4102[18], p4103[9]).
or
- fault threshold exceeded (p4102[19]).
Note:
For sensor type "PTC thermistor" and "Bimetallic NC contact" (p4100[9] = 1, 4), the following applies:
- if r4101[9] > 1650 ohms, the temperature r4105[9] = 250 °C
- if r4101[9] <= 1650 ohms, the temperature r4105[9] = -50 °C
The temperature actual value is displayed via connector output r4105[9] and can be interconnected.
Notice:
This fault only causes the drive to shut down if there is at least one BICO interconnection between the drive and the Terminal Module.
Fault value (r0949, interpret decimal):
Temperature actual value at the time of initiation [0.1 °C].
Remedy: - allow the temperature sensor to cool down to below p4102[19] - hysteresis (p4118[9]).
- if required, set the fault response to NONE (p2100, p2101).
See also: p4102

Reaction upon N: NONE
Acknowl. upon N: NONE
Reaction upon A: NONE
Acknowl. upon A: NONE

F35406 (N, A) TM: Temperature fault/alarm threshold channel 10 exceeded

Message value: %1
Drive object: B_INF, TM150, VECTOR_G
Reaction: Infeed: OFF2 (NONE, OFF1)
Vector: OFF2 (NONE, OFF1, OFF3)
Acknowledge: IMMEDIATELY (POWER ON)
Cause: For the temperature evaluation via the Terminal Module 150 (TM150), at least one of the following conditions to initiate this fault is fulfilled:
- alarm threshold has been exceeded longer than that set in the timer (p4102[20], p4103[10]).
or
- fault threshold exceeded (p4102[21]).
Note:
For sensor type "PTC thermistor" and "Bimetallic NC contact" (p4100[10] = 1, 4), the following applies:
- if r4101[10] > 1650 ohms, the temperature r4105[10] = 250 °C
- if r4101[10] <= 1650 ohms, the temperature r4105[10] = -50 °C
The temperature actual value is displayed via connector output r4105[10] and can be interconnected.
Notice:
This fault only causes the drive to shut down if there is at least one BICO interconnection between the drive and the Terminal Module.
Fault value (r0949, interpret decimal):
Temperature actual value at the time of initiation [0.1 °C].

© Siemens AG 2012 All Rights Reserved

Remedy: - allow the temperature sensor to cool down to below p4102[21] - hysteresis (p4118[10]).
- if required, set the fault response to NONE (p2100, p2101).
See also: p4102

Reaction upon N: NONE
Acknowl. upon N: NONE
Reaction upon A: NONE
Acknowl. upon A: NONE

F35407 (N, A) TM: Temperature fault/alarm threshold channel 11 exceeded

Message value: %1
Drive object: B_INF, TM150, VECTOR_G
Reaction: Infeed: OFF2 (NONE, OFF1)
Vector: OFF2 (NONE, OFF1, OFF3)
Acknowledge: IMMEDIATELY (POWER ON)
Cause: For the temperature evaluation via the Terminal Module 150 (TM150), at least one of the following conditions to initiate this fault is fulfilled:
- alarm threshold has been exceeded longer than that set in the timer (p4102[22], p4103[11]).
or
- fault threshold exceeded (p4102[23]).
Note:
For sensor type "PTC thermistor" and "Bimetallic NC contact" (p4100[11] = 1, 4), the following applies:
- if r4101[11] > 1650 ohms, the temperature r4105[11] = 250 °C
- if r4101[11] <= 1650 ohms, the temperature r4105[11] = -50 °C
The temperature actual value is displayed via connector output r4105[11] and can be interconnected.
Notice:
This fault only causes the drive to shut down if there is at least one BICO interconnection between the drive and the Terminal Module.
Fault value (r0949, interpret decimal):
Temperature actual value at the time of initiation [0.1 °C].
Remedy: - allow the temperature sensor to cool down to below p4102[23] - hysteresis (p4118[11]).
- if required, set the fault response to NONE (p2100, p2101).
See also: p4102

Reaction upon N: NONE
Acknowl. upon N: NONE
Reaction upon A: NONE
Acknowl. upon A: NONE

A35410 (F, N) TM: Temperature alarm threshold channel 4 exceeded

Message value: %1
Drive object: B_INF, TM150, VECTOR_G
Reaction: NONE
Acknowledge: NONE
Cause: The temperature (r4105[4]) measured using the temperature sensing of the Terminal Module 150 (TM150) has exceeded the threshold value to initiate this alarm (p4102[8]).
Note:
For sensor type "PTC thermistor" and "Bimetallic NC contact" (p4100[4] = 1, 4), the following applies:
- if r4101[4] > 1650 ohms, the temperature r4105[4] = 250 °C
- if r4101[4] <= 1650 ohms, the temperature r4105[4] = -50 °C
Alarm value (r2124, interpret decimal):
Temperature actual value at the time of initiation [0.1 °C].
Remedy: Allow the temperature sensor to cool down to below p4102[8] - hysteresis (p4118[4]).
See also: p4102

Reaction upon F: NONE
Acknowl. upon F: IMMEDIATELY (POWER ON)
Reaction upon N: NONE
Acknowl. upon N: NONE

© Siemens AG 2012 All Rights Reserved

A35411 (F, N) TM: Temperature alarm threshold channel 5 exceeded

Message value: %1
Drive object: B_INF, TM150, VECTOR_G
Reaction: NONE
Acknowledge: NONE
Cause: The temperature (r4105[5]) measured using the temperature sensing of the Terminal Module 150 (TM150) has exceeded the threshold value to initiate this alarm (p4102[10]).
Note:
For sensor type "PTC thermistor" and "Bimetallic NC contact" (p4100[5] = 1, 4), the following applies:
- if r4101[5] > 1650 ohms, the temperature r4105[5] = 250 °C
- if r4101[5] <= 1650 ohms, the temperature r4105[5] = -50 °C
Alarm value (r2124, interpret decimal):
Temperature actual value at the time of initiation [0.1 °C].
Remedy: Allow the temperature sensor to cool down to below p4102[10] - hysteresis (p4118[5]).
See also: p4102
Reaction upon F: NONE
Acknowl. upon F: IMMEDIATELY (POWER ON)
Reaction upon N: NONE
Acknowl. upon N: NONE

A35412 (F, N) TM: Temperature alarm threshold channel 6 exceeded

Message value: %1
Drive object: B_INF, TM150, VECTOR_G
Reaction: NONE
Acknowledge: NONE
Cause: The temperature (r4105[6]) measured using the temperature sensing of the Terminal Module 150 (TM150) has exceeded the threshold value to initiate this alarm (p4102[12]).
Note:
For sensor type "PTC thermistor" and "Bimetallic NC contact" (p4100[6] = 1, 4), the following applies:
- if r4101[6] > 1650 ohms, the temperature r4105[6] = 250 °C
- if r4101[6] <= 1650 ohms, the temperature r4105[6] = -50 °C
Alarm value (r2124, interpret decimal):
Temperature actual value at the time of initiation [0.1 °C].
Remedy: Allow the temperature sensor to cool down to below p4102[12] - hysteresis (p4118[6]).
See also: p4102
Reaction upon F: NONE
Acknowl. upon F: IMMEDIATELY (POWER ON)
Reaction upon N: NONE
Acknowl. upon N: NONE

A35413 (F, N) TM: Temperature alarm threshold channel 7 exceeded

Message value: %1
Drive object: B_INF, TM150, VECTOR_G
Reaction: NONE
Acknowledge: NONE
Cause: The temperature (r4105[7]) measured using the temperature sensing of the Terminal Module 150 (TM150) has exceeded the threshold value to initiate this alarm (p4102[14]).
Note:
For sensor type "PTC thermistor" and "Bimetallic NC contact" (p4100[7] = 1, 4), the following applies:
- if r4101[7] > 1650 ohms, the temperature r4105[7] = 250 °C
- if r4101[7] <= 1650 ohms, the temperature r4105[7] = -50 °C
Alarm value (r2124, interpret decimal):
Temperature actual value at the time of initiation [0.1 °C].
Remedy: Allow the temperature sensor to cool down to below p4102[14] - hysteresis (p4118[7]).
See also: p4102
Reaction upon F: NONE
Acknowl. upon F: IMMEDIATELY (POWER ON)

© Siemens AG 2012 All Rights Reserved

Reaction upon N: NONE
Acknowl. upon N: NONE

A35414 (F, N) TM: Temperature alarm threshold channel 8 exceeded

Message value: %1
Drive object: B_INF, TM150, VECTOR_G
Reaction: NONE
Acknowledge: NONE
Cause: The temperature (r4105[8]) measured using the temperature sensing of the Terminal Module 150 (TM150) has exceeded the threshold value to initiate this alarm (p4102[16]).
Note:
For sensor type "PTC thermistor" and "Bimetallic NC contact" (p4100[8] = 1, 4), the following applies:
- if r4101[8] > 1650 ohms, the temperature r4105[8] = 250 °C
- if r4101[8] <= 1650 ohms, the temperature r4105[8] = -50 °C
Alarm value (r2124, interpret decimal):
Temperature actual value at the time of initiation [0.1 °C].
Remedy: Allow the temperature sensor to cool down to below p4102[16] - hysteresis (p4118[8]).
See also: p4102
Reaction upon F: NONE
Acknowl. upon F: IMMEDIATELY (POWER ON)
Reaction upon N: NONE
Acknowl. upon N: NONE

A35415 (F, N) TM: Temperature alarm threshold channel 9 exceeded

Message value: %1
Drive object: B_INF, TM150, VECTOR_G
Reaction: NONE
Acknowledge: NONE
Cause: The temperature (r4105[9]) measured using the temperature sensing of the Terminal Module 150 (TM150) has exceeded the threshold value to initiate this alarm (p4102[18]).
Note:
For sensor type "PTC thermistor" and "Bimetallic NC contact" (p4100[9] = 1, 4), the following applies:
- if r4101[9] > 1650 ohms, the temperature r4105[9] = 250 °C
- if r4101[9] <= 1650 ohms, the temperature r4105[9] = -50 °C
Alarm value (r2124, interpret decimal):
Temperature actual value at the time of initiation [0.1 °C].
Remedy: Allow the temperature sensor to cool down to below p4102[18] - hysteresis (p4118[9]).
See also: p4102
Reaction upon F: NONE
Acknowl. upon F: IMMEDIATELY (POWER ON)
Reaction upon N: NONE
Acknowl. upon N: NONE

A35416 (F, N) TM: Temperature alarm threshold channel 10 exceeded

Message value: %1
Drive object: B_INF, TM150, VECTOR_G
Reaction: NONE
Acknowledge: NONE
Cause: The temperature (r4105[10]) measured using the temperature sensing of the Terminal Module 150 (TM150) has exceeded the threshold value to initiate this alarm (p4102[20]).
Note:
For sensor type "PTC thermistor" and "Bimetallic NC contact" (p4100[10] = 1, 4), the following applies:
- if r4101[10] > 1650 ohms, the temperature r4105[10] = 250 °C
- if r4101[10] <= 1650 ohms, the temperature r4105[10] = -50 °C
Alarm value (r2124, interpret decimal):
Temperature actual value at the time of initiation [0.1 °C].
Remedy: Allow the temperature sensor to cool down to below p4102[20] - hysteresis (p4118[10]).
See also: p4102

© Siemens AG 2012 All Rights Reserved

Reaction upon F: NONE
Acknowl. upon F: IMMEDIATELY (POWER ON)
Reaction upon N: NONE
Acknowl. upon N: NONE

A35417 (F, N) TM: Temperature alarm threshold channel 11 exceeded

Message value: %1
Drive object: B_INF, TM150, VECTOR_G
Reaction: NONE
Acknowledge: NONE
Cause: The temperature (r4105[11]) measured using the temperature sensing of the Terminal Module 150 (TM150) has exceeded the threshold value to initiate this alarm (p4102[22]).
Note:
For sensor type "PTC thermistor" and "Bimetallic NC contact" (p4100[11] = 1, 4), the following applies:
- if r4101[11] > 1650 ohms, the temperature r4105[11] = 250 °C
- if r4101[11] <= 1650 ohms, the temperature r4105[11] = -50 °C
Alarm value (r2124, interpret decimal):
Temperature actual value at the time of initiation [0.1 °C].
Remedy: Allow the temperature sensor to cool down to below p4102[22] - hysteresis (p4118[11]).
See also: p4102
Reaction upon F: NONE
Acknowl. upon F: IMMEDIATELY (POWER ON)
Reaction upon N: NONE
Acknowl. upon N: NONE

N35800 (F) TM: Group signal

Message value: -
Drive object: B_INF, TM150, TM31, TM54F_MA, TM54F_SL, VECTOR_G
Reaction: Infeed: OFF2 (NONE, OFF1)
Vector: OFF2 (IASC/DCBRAKE, NONE, OFF1, OFF3, STOP1, STOP2)
Acknowledge: NONE
Cause: The Terminal Module has detected at least one fault.
Remedy: Evaluates other actual messages.
Reaction upon F: Infeed: OFF2 (NONE, OFF1)
Vector: OFF2 (IASC/DCBRAKE, NONE, OFF1, OFF3, STOP1, STOP2)
Acknowl. upon F: IMMEDIATELY

A35801 (F, N) TM DRIVE-CLiQ: Sign-of-life missing

Message value: Component number: %1, fault cause: %2
Drive object: B_INF, TM150, TM31, TM54F_MA, TM54F_SL, VECTOR_G
Reaction: NONE
Acknowledge: NONE
Cause: A DRIVE-CLiQ communication error has occurred from the Terminal Module to the encoder involved.
Fault cause:
10 (= 0A hex):
The sign-of-life bit in the receive telegram is not set.
Note regarding the message value:
The individual information is coded as follows in the message value (r0949/r2124):
0000yyxx hex: yy = component number, xx = error cause
Remedy: - check the DRIVE-CLiQ connection.
- replace the component involved.
See also: p9916 (DRIVE-CLiQ data transfer error shutdown threshold slave)
Reaction upon F: NONE
Acknowl. upon F: IMMEDIATELY
Reaction upon N: NONE
Acknowl. upon N: NONE

© Siemens AG 2012 All Rights Reserved

A35802 (F, N) TM: Time slice overflow

Message value: -
Drive object: B_INF, TM150, TM31, TM54F_MA, TM54F_SL, VECTOR_G
Reaction: NONE
Acknowledge: NONE
Cause: A time slice overflow has occurred on the Terminal Module.
Remedy: Replace the Terminal Module.
Reaction upon F: NONE
Acknowl. upon F: IMMEDIATELY (POWER ON)
Reaction upon N: NONE
Acknowl. upon N: NONE

A35803 (F, N) TM: Memory test

Message value: -
Drive object: B_INF, TM150, TM31, TM54F_MA, TM54F_SL, VECTOR_G
Reaction: NONE
Acknowledge: NONE
Cause: An error has occurred during the memory test on the Terminal Module.
Remedy: - check whether the permissible ambient temperature for the Terminal Module is being maintained.
- replace the Terminal Module.
Reaction upon F: NONE
Acknowl. upon F: IMMEDIATELY (POWER ON)
Reaction upon N: NONE
Acknowl. upon N: NONE

F35804 (N, A) TM: CRC

Message value: %1
Drive object: B_INF, TM150, TM31, TM54F_MA, TM54F_SL, VECTOR_G
Reaction: NONE
Acknowledge: IMMEDIATELY (POWER ON)
Cause: A checksum error has occurred when reading-out the program memory on the Terminal Module.
Fault value (r0949, interpret hexadecimal):
Difference between the checksum at POWER ON and the actual checksum.
Remedy: - check whether the permissible ambient temperature for the component is maintained.
- replace the Terminal Module.
Reaction upon N: NONE
Acknowl. upon N: NONE
Reaction upon A: NONE
Acknowl. upon A: NONE

A35805 (F, N) TM: EPROM checksum error

Message value: %1
Drive object: B_INF, TM150, TM31, TM54F_MA, TM54F_SL, VECTOR_G
Reaction: NONE
Acknowledge: NONE
Cause: Internal parameter data is corrupted.
Alarm value (r2124, interpret hexadecimal):
01: EEPROM access error.
02: Too many blocks in the EEPROM.
Remedy: - check whether the permissible ambient temperature for the component is maintained.
- replace the Terminal Module 31 (TM31).
Reaction upon F: NONE
Acknowl. upon F: IMMEDIATELY (POWER ON)

© Siemens AG 2012 All Rights Reserved

Reaction upon N: NONE
Acknowl. upon N: NONE

A35807 (F, N) TM: Sequence control time monitoring

Message value: -
Drive object: B_INF, TM150, TM31, TM54F_MA, TM54F_SL, VECTOR_G
Reaction: NONE
Acknowledge: NONE
Cause: Error, timeout, sequence control on the Terminal Module.
Remedy: Replace the Terminal Module.
Reaction upon F: NONE
Acknowl. upon F: IMMEDIATELY (POWER ON)
Reaction upon N: NONE
Acknowl. upon N: NONE

F35820 TM DRIVE-CLiQ: Telegram error

Message value: Component number: %1, fault cause: %2
Drive object: B_INF, TM150, TM31, TM54F_MA, TM54F_SL, VECTOR_G
Reaction: OFF1 (OFF2)
Acknowledge: IMMEDIATELY
Cause: A DRIVE-CLiQ communication error has occurred from the Control Unit to the Terminal Module involved.
Fault cause:
1 (= 01 hex):
Checksum error (CRC error).
2 (= 02 hex):
Telegram is shorter than specified in the length byte or in the receive list.
3 (= 03 hex):
Telegram is longer than specified in the length byte or in the receive list.
4 (= 04 hex):
The length of the receive telegram does not match the receive list.
5 (= 05 hex):
The type of the receive telegram does not match the receive list.
6 (= 06 hex):
The address of the component in the telegram and in the receive list do not match.
7 (= 07 hex):
A SYNC telegram is expected - but the received telegram is not a SYNC telegram.
8 (= 08 hex):
No SYNC telegram is expected - but the received telegram is one.
9 (= 09 hex):
The error bit in the receive telegram is set.
16 (= 10 hex):
The receive telegram is too early.
Note regarding the message value:
The individual information is coded as follows in the message value (r0949/r2124):
0000yyxx hex: yy = component number, xx = error cause
Remedy: - carry out a POWER ON (power off/on).
- check the electrical cabinet design and cable routing for EMC compliance
- check the DRIVE-CLiQ wiring (interrupted cable, contacts, ...).
See also: p9916 (DRIVE-CLiQ data transfer error shutdown threshold slave)

F35835 TM DRIVE-CLiQ: Cyclic data transfer error

Message value: Component number: %1, fault cause: %2
Drive object: B_INF, TM150, TM31, TM54F_MA, TM54F_SL, VECTOR_G
Reaction: OFF1 (OFF2)
Acknowledge: IMMEDIATELY
Cause: A DRIVE-CLiQ communication error has occurred from the Control Unit to the Terminal Module involved. The nodes do not send and receive in synchronism.

© Siemens AG 2012 All Rights Reserved

Fault cause:
33 (= 21 hex):
The cyclic telegram has not been received.
34 (= 22 hex):
Timeout in the telegram receive list.
64 (= 40 hex):
Timeout in the telegram send list.
Note regarding the message value:
The individual information is coded as follows in the message value (r0949/r2124):
0000yyxx hex: yy = component number, xx = error cause

Remedy: - carry out a POWER ON.
- replace the component involved.
See also: p9916 (DRIVE-CLiQ data transfer error shutdown threshold slave)

F35836 TM DRIVE-CLiQ: Send error for DRIVE-CLiQ data

Message value: Component number: %1, fault cause: %2

Drive object: B_INF, TM150, TM31, TM54F_MA, TM54F_SL, VECTOR_G

Reaction: OFF1 (OFF2)

Acknowledge: IMMEDIATELY

Cause: A DRIVE-CLiQ communication error has occurred from the Terminal Module to the encoder involved. Data were not able to be sent.
Fault cause:
65 (= 41 hex):
Telegram type does not match send list.
Note regarding the message value:
The individual information is coded as follows in the message value (r0949/r2124):
0000yyxx hex: yy = component number, xx = error cause

Remedy: Carry out a POWER ON.

F35837 PTM DRIVE-CLiQ: Component fault

Message value: Component number: %1, fault cause: %2

Drive object: B_INF, TM150, TM31, TM54F_MA, TM54F_SL, VECTOR_G

Reaction: OFF1 (OFF2)

Acknowledge: IMMEDIATELY

Cause: Fault detected on the DRIVE-CLiQ component concerned. Faulty hardware cannot be excluded.
Fault cause:
32 (= 20 hex):
Error in the telegram header.
35 (= 23 hex):
Receive error: The telegram buffer memory contains an error.
66 (= 42 hex):
Send error: The telegram buffer memory contains an error.
67 (= 43 hex):
Send error: The telegram buffer memory contains an error.
Note regarding the message value:
The individual information is coded as follows in the message value (r0949/r2124):
0000yyxx hex: yy = component number, xx = error cause

Remedy: - check the DRIVE-CLiQ wiring (interrupted cable, contacts, ...).
- check the electrical cabinet design and cable routing for EMC compliance
- if required, use another DRIVE-CLiQ socket (p9904).
- replace the component involved.

F35845 TM DRIVE-CLiQ: Cyclic data transfer error

Message value: Component number: %1, fault cause: %2

Drive object: B_INF, TM150, TM31, TM54F_MA, TM54F_SL, VECTOR_G

Reaction: OFF1 (OFF2)

Acknowledge: IMMEDIATELY

Cause: A DRIVE-CLiQ communication error has occurred from the Terminal Module (TM) to the encoder involved.

© Siemens AG 2012 All Rights Reserved

Fault cause:
11 (= 0B hex):
Synchronization error during alternating cyclic data transfer.
Note regarding the message value:
The individual information is coded as follows in the message value (r0949/r2124):
0000yyxx hex: yy = component number, xx = error cause

Remedy: Carry out a POWER ON.
See also: p9916 (DRIVE-CLiQ data transfer error shutdown threshold slave)

F35850 TM: Internal software error

Message value: %1

Drive object: B_INF, TM150, TM31, TM54F_MA, TM54F_SL, VECTOR_G

Reaction: Infeed: OFF1 (NONE, OFF2)
Vector: OFF1 (NONE, OFF2, OFF3)

Acknowledge: POWER ON

Cause: An internal software error in the Terminal Module (TM) has occurred.
Fault value (r0949, interpret decimal):
1: Background time slice is blocked.
2: Checksum over the code memory is not OK.

Remedy: - replace the Terminal Module (TM).
- if required, upgrade the firmware in the Terminal Module.
- contact the Hotline.

F35851 TM DRIVE-CLiQ (CU): Sign-of-life missing

Message value: Component number: %1, fault cause: %2

Drive object: B_INF, TM150, TM31, TM54F_MA, TM54F_SL, VECTOR_G

Reaction: OFF1 (OFF2)

Acknowledge: IMMEDIATELY

Cause: A DRIVE-CLiQ communication error has occurred from the Terminal Module involved (TM) to the Control Unit.
The DRIVE-CLiQ component did not set the sign-of-life to the Control Unit.
Fault cause:
10 (= 0A hex):
The sign-of-life bit in the receive telegram is not set.
Note regarding the message value:
The individual information is coded as follows in the message value (r0949/r2124):
0000yyxx hex: yy = component number, xx = error cause

Remedy: Upgrade the firmware of the component involved.

F35860 TM DRIVE-CLiQ (CU): Telegram error

Message value: Component number: %1, fault cause: %2

Drive object: B_INF, TM150, TM31, TM54F_MA, TM54F_SL, VECTOR_G

Reaction: OFF1 (OFF2)

Acknowledge: IMMEDIATELY

Cause: A DRIVE-CLiQ communication error has occurred from the Terminal Module involved (TM) to the Control Unit.
Fault cause:
1 (= 01 hex):
Checksum error (CRC error).
2 (= 02 hex):
Telegram is shorter than specified in the length byte or in the receive list.
3 (= 03 hex):
Telegram is longer than specified in the length byte or in the receive list.
4 (= 04 hex):
The length of the receive telegram does not match the receive list.
5 (= 05 hex):
The type of the receive telegram does not match the receive list.
6 (= 06 hex):
The address of the power unit in the telegram and in the receive list do not match.
9 (= 09 hex):
The error bit in the receive telegram is set.

© Siemens AG 2012 All Rights Reserved

16 (= 10 hex):
The receive telegram is too early.
17 (= 11 hex):
CRC error and the receive telegram is too early.
18 (= 12 hex):
The telegram is shorter than that specified in the length byte or in the receive list and the receive telegram is too early.
19 (= 13 hex):
The telegram is longer than that specified in the length byte or in the receive list and the receive telegram is too early.
20 (= 14 hex):
The length of the receive telegram does not match the receive list and the receive telegram is too early.
21 (= 15 hex):
The type of the receive telegram does not match the receive list and the receive telegram is too early.
22 (= 16 hex):
The address of the power unit in the telegram and in the receive list does not match and the receive telegram is too early.
25 (= 19 hex):
The error bit in the receive telegram is set and the receive telegram is too early.
Note regarding the message value:
The individual information is coded as follows in the message value (r0949/r2124):
0000yyxx hex: yy = component number, xx = error cause

Remedy: - carry out a POWER ON (power off/on).
- check the electrical cabinet design and cable routing for EMC compliance
- check the DRIVE-CLiQ wiring (interrupted cable, contacts, ...).
See also: p9915 (DRIVE-CLiQ data transfer error shutdown threshold master)

F35875 TM DRIVE-CLiQ (CU): Supply voltage failed

Message value: Component number: %1, fault cause: %2

Drive object: B_INF, TM150, TM31, TM54F_MA, TM54F_SL, VECTOR_G

Reaction: OFF1 (OFF2)

Acknowledge: IMMEDIATELY

Cause: The DRIVE-CLiQ communication from the DRIVE-CLiQ component involved to the Control Unit signals that the supply voltage has failed.
Fault cause:
9 (= 09 hex):
The power supply voltage for the components has failed.
Note regarding the message value:
The individual information is coded as follows in the message value (r0949/r2124):
0000yyxx hex: yy = component number, xx = error cause

Remedy: - carry out a POWER ON (power off/on).
- check the power supply voltage wiring for the DRIVE-CLiQ component (interrupted cable, contacts, ...).
- check the dimensioning of the power supply for the DRIVE-CLiQ component.

F35885 TM DRIVE-CLiQ (CU): Cyclic data transfer error

Message value: Component number: %1, fault cause: %2

Drive object: B_INF, TM150, TM31, TM54F_MA, TM54F_SL, VECTOR_G

Reaction: OFF1 (OFF2)

Acknowledge: IMMEDIATELY

Cause: A DRIVE-CLiQ communication error has occurred from the Terminal Module involved (TM) to the Control Unit.
The nodes do not send and receive in synchronism.
Fault cause:
26 (= 1A hex):
Sign-of-life bit in the receive telegram not set and the receive telegram is too early.
33 (= 21 hex):
The cyclic telegram has not been received.
34 (= 22 hex):
Timeout in the telegram receive list.
64 (= 40 hex):
Timeout in the telegram send list.
98 (= 62 hex):
Error at the transition to cyclic operation.

© Siemens AG 2012 All Rights Reserved

Note regarding the message value:
The individual information is coded as follows in the message value (r0949/r2124):
0000yyxx hex: yy = component number, xx = error cause

Remedy: - check the power supply voltage of the component involved.
- carry out a POWER ON.
- replace the component involved.
See also: p9915 (DRIVE-CLiQ data transfer error shutdown threshold master)

F35886 TM DRIVE-CLiQ (CU): Error when sending DRIVE-CLiQ data

Message value: Component number: %1, fault cause: %2

Drive object: B_INF, TM150, TM31, TM54F_MA, TM54F_SL, VECTOR_G

Reaction: OFF1 (OFF2)

Acknowledge: IMMEDIATELY

Cause: A DRIVE-CLiQ communication error has occurred from the Terminal Module involved (TM) to the Control Unit.
Data were not able to be sent.
Fault cause:
65 (= 41 hex):
Telegram type does not match send list.
Note regarding the message value:
The individual information is coded as follows in the message value (r0949/r2124):
0000yyxx hex: yy = component number, xx = error cause

Remedy: Carry out a POWER ON.

F35887 TM DRIVE-CLiQ (CU): Component fault

Message value: Component number: %1, fault cause: %2

Drive object: B_INF, TM150, TM31, TM54F_MA, TM54F_SL, VECTOR_G

Reaction: OFF1 (OFF2)

Acknowledge: IMMEDIATELY

Cause: Fault detected on the DRIVE-CLiQ component (Terminal Module) involved. Faulty hardware cannot be excluded.
Fault cause:
32 (= 20 hex):
Error in the telegram header.
35 (= 23 hex):
Receive error: The telegram buffer memory contains an error.
66 (= 42 hex):
Send error: The telegram buffer memory contains an error.
67 (= 43 hex):
Send error: The telegram buffer memory contains an error.
96 (= 60 hex):
Response received too late during runtime measurement.
97 (= 61 hex):
Time taken to exchange characteristic data too long.
Note regarding the message value:
The individual information is coded as follows in the message value (r0949/r2124):
0000yyxx hex: yy = component number, xx = error cause

Remedy: - check the DRIVE-CLiQ wiring (interrupted cable, contacts, ...).
- check the electrical cabinet design and cable routing for EMC compliance
- if required, use another DRIVE-CLiQ socket (p9904).
- replace the component involved.

F35895 TM DRIVE-CLiQ (CU): Alternating cyclic data transfer error

Message value: Component number: %1, fault cause: %2

Drive object: B_INF, TM150, TM31, TM54F_MA, TM54F_SL, VECTOR_G

Reaction: OFF1 (OFF2)

Acknowledge: IMMEDIATELY

Cause: A DRIVE-CLiQ communication error has occurred from the Terminal Module involved (TM) to the Control Unit.
Fault cause:
11 (= 0B hex):
Synchronization error during alternating cyclic data transfer.

© Siemens AG 2012 All Rights Reserved

Note regarding the message value:
The individual information is coded as follows in the message value (r0949/r2124):
0000yyxx hex: yy = component number, xx = error cause

Remedy: Carry out a POWER ON.
See also: p9915 (DRIVE-CLiQ data transfer error shutdown threshold master)

F35896 TM DRIVE-CLiQ (CU): Inconsistent component properties

Message value: Component number: %1

Drive object: B_INF, TM150, TM31, TM54F_MA, TM54F_SL, VECTOR_G

Reaction: Infeed: OFF2 (NONE, OFF1)
Vector: OFF2 (IASC/DCBRAKE, NONE, OFF1, OFF3, STOP1, STOP2)

Acknowledge: IMMEDIATELY

Cause: The properties of the DRIVE-CLiQ component (Terminal Module), specified by the fault value, have changed in an incompatible fashion with respect to the properties when booted. One cause can be, e.g. that a DRIVE-CLiQ cable or DRIVE-CLiQ component has been replaced.
Fault value (r0949, interpret decimal):
Component number.

Remedy: - carry out a POWER ON.
- when a component is replaced, the same component type and if possible the same firmware version should be used.
- when a cable is replaced, only cables whose length is the same as or as close as possible to the length of the original cables should be used (ensure compliance with the maximum cable length).

F35899 (N, A) TM: Unknown fault

Message value: New message: %1

Drive object: B_INF, TM150, TM31, TM54F_MA, TM54F_SL, VECTOR_G

Reaction: Infeed: NONE (OFF1, OFF2)
Vector: NONE (IASC/DCBRAKE, OFF1, OFF2, OFF3, STOP1, STOP2)

Acknowledge: IMMEDIATELY (POWER ON)

Cause: A fault has occurred on the Terminal Module that cannot be interpreted by the Control Unit firmware.
This can occur if the firmware on this component is more recent than the firmware on the Control Unit.
Fault value (r0949, interpret decimal):
Fault number.
Note:
If required, the significance of this new fault can be read about in a more recent description of the Control Unit.

Remedy: - replace the firmware on the Terminal Module by an older firmware version (r0158).
- upgrade the firmware on the Control Unit (r0018).

Reaction upon N: NONE

Acknowl. upon N: NONE

Reaction upon A: NONE

Acknowl. upon A: NONE

A35903 (F, N) TM: I2C bus error occurred

Message value: -

Drive object: B_INF, TM150, TM31, VECTOR_G

Reaction: NONE

Acknowledge: NONE

Cause: An error has occurred while accessing the internal I2C bus of the Terminal Module.

Remedy: Replace the Terminal Module.

Reaction upon F: NONE

Acknowl. upon F: IMMEDIATELY (POWER ON)

Reaction upon N: NONE

Acknowl. upon N: NONE

© Siemens AG 2012 All Rights Reserved

A35904 (F, N) TM: EEPROM

Message value: -
Drive object: B_INF, TM150, TM31, VECTOR_G
Reaction: NONE
Acknowledge: NONE
Cause: An error has occurred accessing the non-volatile memory on the Terminal Module.
Remedy: Replace the Terminal Module.
Reaction upon F: NONE
Acknowl. upon F: IMMEDIATELY (POWER ON)
Reaction upon N: NONE
Acknowl. upon N: NONE

A35905 (F, N) TM: Parameter access

Message value: -
Drive object: B_INF, TM150, TM31, VECTOR_G
Reaction: NONE
Acknowledge: NONE
Cause: The Control Unit attempted to write an illegal parameter value to the Terminal Module.
Remedy: - check whether the firmware version of the Terminal Module (r0158) matches the firmware version of Control Unit (r0018).
- if required, replace the Terminal Module.
Note:
The firmware versions that match each other are in the readme.txt file on the memory card.
Reaction upon F: NONE
Acknowl. upon F: IMMEDIATELY (POWER ON)
Reaction upon N: NONE
Acknowl. upon N: NONE

A35906 (F, N) TM: 24 V power supply missing

Message value: %1
Drive object: B_INF, TM150, TM31, VECTOR_G
Reaction: NONE
Acknowledge: NONE
Cause: The 24 V power supply for the digital outputs is missing.
Alarm value (r2124, interpret hexadecimal):
01: TM17 24 V power supply for DI/DO 0 ... 7 missing.
02: TM17 24 V power supply for DI/DO 8 ... 15 missing.
04: TM15 24 V power supply for DI/DO 0 ... 7 (X520) missing.
08: TM15 24 V power supply for DI/DO 8 ... 15 (X521) missing.
10: TM15 24 V power supply for DI/DO 16 ... 23 (X522) missing.
20: TM41 24 V power supply for DI/DO 0 ... 3 missing.
Remedy: Check the terminals for the power supply voltage (L1+, L2+, L3+, M or +24 V_1 for TM41).
Reaction upon F: NONE
Acknowl. upon F: IMMEDIATELY (POWER ON)
Reaction upon N: NONE
Acknowl. upon N: NONE

A35907 (F, N) TM: Hardware initialization error

Message value: %1
Drive object: B_INF, TM150, TM31, VECTOR_G
Reaction: NONE
Acknowledge: NONE
Cause: The Terminal Module was not successfully initialized.

© Siemens AG 2012 All Rights Reserved

Alarm value (r2124, interpret hexadecimal):
01: TM17 or TM41 - incorrect configuration request.
02: TM17 or TM41 - programming not successful.
04: TM17 or TM41 - invalid time stamp

Remedy: Carry out a POWER ON.
Reaction upon F: NONE
Acknowl. upon F: IMMEDIATELY (POWER ON)
Reaction upon N: NONE
Acknowl. upon N: NONE

A35910 (F, N) TM: Module overtemperature

Message value: -
Drive object: B_INF, TM150, TM31, VECTOR_G
Reaction: NONE
Acknowledge: NONE
Cause: The temperature in the module has exceeded the highest permissible limit.
Remedy: - reduce the ambient temperature.
- replace the Terminal Module.
Reaction upon F: NONE
Acknowl. upon F: IMMEDIATELY (POWER ON)
Reaction upon N: NONE
Acknowl. upon N: NONE

A35911 (F, N) TM: Clock synchronous operation sign-of-life missing

Message value: -
Drive object: B_INF, TM150, TM31, VECTOR_G
Reaction: NONE
Acknowledge: NONE
Cause: The maximum permissible number of errors in the master sign-of-life (clock synchronous operation) has been exceeded in cyclic operation.
When the alarm is output, the module outputs are reset up to the next synchronization.
Remedy: - check the physical bus configuration (terminating resistor, shielding, etc.).
- check the interconnection of the master sign-of-life (r4201 via p0915).
- check whether the master correctly sends the sign-of-life (e.g. set up a trace with r4201.12 ... r4201.15 and trigger signal r4301.9).
- check the bus and master for utilization level (e.g. bus cycle time Tdp was set too short).
Reaction upon F: NONE
Acknowl. upon F: IMMEDIATELY (POWER ON)
Reaction upon N: NONE
Acknowl. upon N: NONE

A35920 (F, N) TM: Error temperature sensor channel 0

Message value: %1
Drive object: B_INF, TM150, TM31, VECTOR_G
Reaction: NONE
Acknowledge: NONE
Cause: When evaluating the temperature sensor, an error occurred.
Alarm value (r2124, interpret decimal):
1: Wire breakage or sensor not connected.
KTY84: R > 1630 Ohm (TM150: R > 2170 Ohm), PT100: R > 194 Ohm, PT1000: R > 1944 Ohm
2: Measured resistance too low.
PTC thermistor: R < 20 Ohm, KTY84: R < 50 Ohm (TM150: R < 180 Ohm), PT100: R < 60 Ohm, PT1000: R < 603 Ohm
Remedy: - make sure that the sensor is connected correctly.
- replace the sensor.

© Siemens AG 2012 All Rights Reserved

Reaction upon F: NONE
Acknowl. upon F: IMMEDIATELY (POWER ON)
Reaction upon N: NONE
Acknowl. upon N: NONE

A35921 (F, N) TM: Error temperature sensor channel 1

Message value: %1
Drive object: B_INF, TM150, VECTOR_G
Reaction: NONE
Acknowledge: NONE
Cause: When evaluating the temperature sensor, an error occurred.
Alarm value (r2124, interpret decimal):
1: Wire breakage or sensor not connected.
KTY84: R > 1630 Ohm (TM150: R > 2170 Ohm), PT100: R > 194 Ohm, PT1000: R > 1944 Ohm
2: Measured resistance too low.
PTC thermistor: R < 20 Ohm, KTY84: R < 50 Ohm (TM150: R < 180 Ohm), PT100: R < 60 Ohm, PT1000: R < 603 Ohm
Remedy: - make sure that the sensor is connected correctly.
- replace the sensor.
Reaction upon F: NONE
Acknowl. upon F: IMMEDIATELY (POWER ON)
Reaction upon N: NONE
Acknowl. upon N: NONE

A35922 (F, N) TM: Error temperature sensor channel 2

Message value: %1
Drive object: B_INF, TM150, VECTOR_G
Reaction: NONE
Acknowledge: NONE
Cause: When evaluating the temperature sensor, an error occurred.
Alarm value (r2124, interpret decimal):
1: Wire breakage or sensor not connected.
KTY84: R > 1630 Ohm (TM150: R > 2170 Ohm), PT100: R > 194 Ohm, PT1000: R > 1944 Ohm
2: Measured resistance too low.
PTC thermistor: R < 20 Ohm, KTY84: R < 50 Ohm (TM150: R < 180 Ohm), PT100: R < 60 Ohm, PT1000: R < 603 Ohm
Remedy: - make sure that the sensor is connected correctly.
- replace the sensor.
Reaction upon F: NONE
Acknowl. upon F: IMMEDIATELY (POWER ON)
Reaction upon N: NONE
Acknowl. upon N: NONE

A35923 (F, N) TM: Error temperature sensor channel 3

Message value: %1
Drive object: B_INF, TM150, VECTOR_G
Reaction: NONE
Acknowledge: NONE
Cause: When evaluating the temperature sensor, an error occurred.
Alarm value (r2124, interpret decimal):
1: Wire breakage or sensor not connected.
KTY84: R > 1630 Ohm (TM150: R > 2170 Ohm), PT100: R > 194 Ohm, PT1000: R > 1944 Ohm
2: Measured resistance too low.
PTC thermistor: R < 20 Ohm, KTY84: R < 50 Ohm (TM150: R < 180 Ohm), PT100: R < 60 Ohm, PT1000: R < 603 Ohm
Remedy: - make sure that the sensor is connected correctly.
- replace the sensor.

© Siemens AG 2012 All Rights Reserved

Reaction upon F: NONE
Acknowl. upon F: IMMEDIATELY (POWER ON)
Reaction upon N: NONE
Acknowl. upon N: NONE

A35924 (F, N) TM: Error temperature sensor channel 4

Message value: %1
Drive object: B_INF, TM150, VECTOR_G
Reaction: NONE
Acknowledge: NONE
Cause: When evaluating the temperature sensor, an error occurred.
Alarm value (r2124, interpret decimal):
1: Wire breakage or sensor not connected.
KTY84: R > 2170 Ohm, PT100: R > 194 Ohm, PT1000: R > 1944 Ohm
2: Measured resistance too low.
PTC thermistor: R < 20 Ohm, KTY84: R < 180 Ohm, PT100: R < 60 Ohm, PT1000: R < 603 Ohm
Remedy: - make sure that the sensor is connected correctly.
- replace the sensor.
Reaction upon F: NONE
Acknowl. upon F: IMMEDIATELY (POWER ON)
Reaction upon N: NONE
Acknowl. upon N: NONE

A35925 (F, N) TM: Error temperature sensor channel 5

Message value: %1
Drive object: B_INF, TM150, VECTOR_G
Reaction: NONE
Acknowledge: NONE
Cause: When evaluating the temperature sensor, an error occurred.
Alarm value (r2124, interpret decimal):
1: Wire breakage or sensor not connected.
KTY84: R > 2170 Ohm, PT100: R > 194 Ohm, PT1000: R > 1944 Ohm
2: Measured resistance too low.
PTC thermistor: R < 20 Ohm, KTY84: R < 180 Ohm, PT100: R < 60 Ohm, PT1000: R < 603 Ohm
Remedy: - make sure that the sensor is connected correctly.
- replace the sensor.
Reaction upon F: NONE
Acknowl. upon F: IMMEDIATELY (POWER ON)
Reaction upon N: NONE
Acknowl. upon N: NONE

A35926 (F, N) TM: Error temperature sensor channel 6

Message value: %1
Drive object: B_INF, TM150, VECTOR_G
Reaction: NONE
Acknowledge: NONE
Cause: When evaluating the temperature sensor, an error occurred.
Alarm value (r2124, interpret decimal):
1: Wire breakage or sensor not connected.
KTY84: R > 2170 Ohm, PT100: R > 194 Ohm, PT1000: R > 1944 Ohm
2: Measured resistance too low.
PTC thermistor: R < 20 Ohm, KTY84: R < 180 Ohm, PT100: R < 60 Ohm, PT1000: R < 603 Ohm
Remedy: - make sure that the sensor is connected correctly.
- replace the sensor.
Reaction upon F: NONE
Acknowl. upon F: IMMEDIATELY (POWER ON)

© Siemens AG 2012 All Rights Reserved

Reaction upon N: NONE
Acknowl. upon N: NONE

A35927 (F, N) TM: Error temperature sensor channel 7

Message value: %1
Drive object: B_INF, TM150, VECTOR_G
Reaction: NONE
Acknowledge: NONE
Cause: When evaluating the temperature sensor, an error occurred.
Alarm value (r2124, interpret decimal):
1: Wire breakage or sensor not connected.
KTY84: R > 2170 Ohm, PT100: R > 194 Ohm, PT1000: R > 1944 Ohm
2: Measured resistance too low.
PTC thermistor: R < 20 Ohm, KTY84: R < 180 Ohm, PT100: R < 60 Ohm, PT1000: R < 603 Ohm
Remedy: - make sure that the sensor is connected correctly.
- replace the sensor.
Reaction upon F: NONE
Acknowl. upon F: IMMEDIATELY (POWER ON)
Reaction upon N: NONE
Acknowl. upon N: NONE

A35928 (F, N) TM: Error temperature sensor channel 8

Message value: %1
Drive object: B_INF, TM150, VECTOR_G
Reaction: NONE
Acknowledge: NONE
Cause: When evaluating the temperature sensor, an error occurred.
Alarm value (r2124, interpret decimal):
1: Wire breakage or sensor not connected.
KTY84: R > 2170 Ohm, PT100: R > 194 Ohm, PT1000: R > 1944 Ohm
2: Measured resistance too low.
PTC thermistor: R < 20 Ohm, KTY84: R < 180 Ohm, PT100: R < 60 Ohm, PT1000: R < 603 Ohm
Remedy: - make sure that the sensor is connected correctly.
- replace the sensor.
Reaction upon F: NONE
Acknowl. upon F: IMMEDIATELY (POWER ON)
Reaction upon N: NONE
Acknowl. upon N: NONE

A35929 (F, N) TM: Error temperature sensor channel 9

Message value: %1
Drive object: B_INF, TM150, VECTOR_G
Reaction: NONE
Acknowledge: NONE
Cause: When evaluating the temperature sensor, an error occurred.
Alarm value (r2124, interpret decimal):
1: Wire breakage or sensor not connected.
KTY84: R > 2170 Ohm, PT100: R > 194 Ohm, PT1000: R > 1944 Ohm
2: Measured resistance too low.
PTC thermistor: R < 20 Ohm, KTY84: R < 180 Ohm, PT100: R < 60 Ohm, PT1000: R < 603 Ohm
Remedy: - make sure that the sensor is connected correctly.
- replace the sensor.
Reaction upon F: NONE
Acknowl. upon F: IMMEDIATELY (POWER ON)
Reaction upon N: NONE
Acknowl. upon N: NONE

© Siemens AG 2012 All Rights Reserved

A35930 (F, N) TM: Error temperature sensor channel 10

Message value: %1
Drive object: B_INF, TM150, VECTOR_G
Reaction: NONE
Acknowledge: NONE
Cause: When evaluating the temperature sensor, an error occurred.
Alarm value (r2124, interpret decimal):
1: Wire breakage or sensor not connected.
KTY84: R > 2170 Ohm, PT100: R > 194 Ohm, PT1000: R > 1944 Ohm
2: Measured resistance too low.
PTC thermistor: R < 20 Ohm, KTY84: R < 180 Ohm, PT100: R < 60 Ohm, PT1000: R < 603 Ohm
Remedy: - make sure that the sensor is connected correctly.
- replace the sensor.
Reaction upon F: NONE
Acknowl. upon F: IMMEDIATELY (POWER ON)
Reaction upon N: NONE
Acknowl. upon N: NONE

A35931 (F, N) TM: Error temperature sensor channel 11

Message value: %1
Drive object: B_INF, TM150, VECTOR_G
Reaction: NONE
Acknowledge: NONE
Cause: When evaluating the temperature sensor, an error occurred.
Alarm value (r2124, interpret decimal):
1: Wire breakage or sensor not connected.
KTY84: R > 2170 Ohm, PT100: R > 194 Ohm, PT1000: R > 1944 Ohm
2: Measured resistance too low.
PTC thermistor: R < 20 Ohm, KTY84: R < 180 Ohm, PT100: R < 60 Ohm, PT1000: R < 603 Ohm
Remedy: - make sure that the sensor is connected correctly.
- replace the sensor.
Reaction upon F: NONE
Acknowl. upon F: IMMEDIATELY (POWER ON)
Reaction upon N: NONE
Acknowl. upon N: NONE

F35950 TM: Internal software error

Message value: %1
Drive object: VECTOR_G
Reaction: OFF2 (NONE)
Acknowledge: POWER ON
Cause: An internal software error has occurred.
Fault value (r0949, interpret decimal):
Information about the fault source.
Only for internal Siemens troubleshooting.
Remedy: - If necessary, upgrade the firmware in the Terminal Module to a later version.
- contact the Hotline.

A35999 (F, N) TM: Unknown alarm

Message value: New message: %1
Drive object: B_INF, TM150, TM31, TM54F_MA, TM54F_SL, VECTOR_G
Reaction: NONE
Acknowledge: NONE
Cause: An alarm has occurred on the Terminal Module that cannot be interpreted by the Control Unit firmware.
This can occur if the firmware on this component is more recent than the firmware on the Control Unit.

© Siemens AG 2012 All Rights Reserved

Alarm value (r2124, interpret decimal):
Alarm number.
Note:
If required, the significance of this new alarm can be read about in a more recent description of the Control Unit.

Remedy: - replace the firmware on the Terminal Module by an older firmware version (r0158).
- upgrade the firmware on the Control Unit (r0018).

Reaction upon F: Infeed: NONE (OFF1, OFF2)
Vector: NONE (IASC/DCBRAKE, OFF1, OFF2, OFF3, STOP1, STOP2)

Acknowl. upon F: IMMEDIATELY (POWER ON)

Reaction upon N: NONE

Acknowl. upon N: NONE

F36207 (N, A) Hub: Overtemperature component

Message value: %1

Drive object: B_INF, HUB, VECTOR_G

Reaction: NONE (OFF1, OFF2)

Acknowledge: IMMEDIATELY (POWER ON)

Cause: The temperature on the DRIVE-CLiQ Hub Module has exceeded the fault threshold.
Fault value (r0949, interpret decimal):
Actual temperature in 0.1 °C resolution.

Remedy: - Check ambient temperature at component installation location.
- replace the component involved.

Reaction upon N: NONE

Acknowl. upon N: NONE

Reaction upon A: NONE

Acknowl. upon A: NONE

A36211 (F, N) Hub: Overtemperature alarm component

Message value: %1

Drive object: B_INF, HUB, VECTOR_G

Reaction: NONE

Acknowledge: NONE

Cause: The temperature on the DRIVE-CLiQ Hub Module has exceeded the alarm threshold.
Alarm value (r2124, interpret decimal):
Actual temperature in 0.1 °C resolution.

Remedy: - Check ambient temperature at component installation location.
- replace the component involved.

Reaction upon F: NONE

Acknowl. upon F: IMMEDIATELY

Reaction upon N: NONE

Acknowl. upon N: NONE

F36214 (N, A) Hub: overvoltage fault 24 V supply

Message value: %1

Drive object: B_INF, HUB, VECTOR_G

Reaction: NONE (OFF1, OFF2)

Acknowledge: IMMEDIATELY (POWER ON)

Cause: The 24 V power supply on the DRIVE-CLiQ Hub Module has exceeded the fault threshold.
Fault value (r0949, interpret decimal):
Actual operating voltage in 0.1 °C resolution

Remedy: - check the supply voltage of the component involved.
- replace the component involved.

Reaction upon N: NONE

Acknowl. upon N: NONE

Reaction upon A: NONE

Acknowl. upon A: NONE

© Siemens AG 2012 All Rights Reserved

F36216 (N, A) Hub: undervoltage fault 24 V supply

Message value: %1
Drive object: B_INF, HUB, VECTOR_G
Reaction: NONE (OFF1, OFF2)
Acknowledge: IMMEDIATELY (POWER ON)
Cause: The 24 V power supply on the DRIVE-CLiQ Hub Module has undershot the fault threshold.
Fault value (r0949, interpret decimal):
Actual operating voltage in 0.1 °C resolution
Remedy: - check the supply voltage of the component involved.
- replace the component involved.
Reaction upon N: NONE
Acknowl. upon N: NONE
Reaction upon A: NONE
Acknowl. upon A: NONE

A36217 (N) Hub: undervoltage alarm 24 V supply

Message value: %1
Drive object: B_INF, HUB, VECTOR_G
Reaction: NONE
Acknowledge: NONE
Cause: The 24 V power supply on the DRIVE-CLiQ Hub Module has undershot the alarm threshold.
Alarm value (r2124, interpret decimal):
Actual operating voltage in 0.1 °C resolution
Remedy: - check the supply voltage of the component involved.
- replace the component involved.
Reaction upon N: NONE
Acknowl. upon N: NONE

N36800 (F) Hub: Group signal

Message value: -
Drive object: B_INF, HUB, VECTOR_G
Reaction: NONE
Acknowledge: NONE
Cause: The DRIVE-CLiQ Hub Module has detected at least one fault.
Remedy: Evaluates other actual messages.
Reaction upon F: NONE
Acknowl. upon F: IMMEDIATELY

A36801 (F, N) Hub DRIVE-CLiQ: Sign-of-life missing

Message value: Component number: %1, fault cause: %2
Drive object: B_INF, HUB, VECTOR_G
Reaction: NONE
Acknowledge: NONE
Cause: A DRIVE-CLiQ communications error has occurred from the Control Unit to the DRIVE-CLiQ Hub Module involved.
Fault cause:
10 (= 0A hex):
The sign-of-life bit in the receive telegram is not set.
Note regarding the message value:
The individual information is coded as follows in the message value (r0949/r2124):
0000yyxx hex: yy = component number, xx = error cause
Remedy: - check the DRIVE-CLiQ connection.
- replace the component involved.
See also: p9916 (DRIVE-CLiQ data transfer error shutdown threshold slave)
Reaction upon F: NONE
Acknowl. upon F: IMMEDIATELY

© Siemens AG 2012 All Rights Reserved

Reaction upon N: NONE
Acknowl. upon N: NONE

F36802 (N, A) Hub: Time slice overflow

Message value: %1
Drive object: B_INF, HUB, VECTOR_G
Reaction: Infeed: OFF2 (NONE)
Vector: NONE
Acknowledge: IMMEDIATELY (POWER ON)
Cause: A time slice overflow has occurred on the DRIVE-CLiQ Hub Module.
Fault value (r0949, interpret decimal):
xx: Time slice number xx
Remedy: - reduce the current controller frequency.
- carry out a POWER ON (power off/on) for all components.
- upgrade firmware to later version.
- contact the Hotline.
Reaction upon N: NONE
Acknowl. upon N: NONE
Reaction upon A: NONE
Acknowl. upon A: NONE

F36804 (N, A) Hub: Checksum error

Message value: %1
Drive object: B_INF, HUB, VECTOR_G
Reaction: NONE
Acknowledge: IMMEDIATELY (POWER ON)
Cause: A checksum error has occurred when reading out the program memory on the DRIVE-CLiQ Hub Module.
Alarm value (r2124, interpret hexadecimal):
Difference between the checksum at POWER ON and the actual checksum.
Remedy: - check whether the permissible ambient temperature for the component is maintained.
- replace the DRIVE-CLiQ Hub Module.
Reaction upon N: NONE
Acknowl. upon N: NONE
Reaction upon A: NONE
Acknowl. upon A: NONE

A36805 (F, N) Hub: EEPROM checksum incorrect

Message value: %1
Drive object: B_INF, HUB, VECTOR_G
Reaction: NONE
Acknowledge: NONE
Cause: The internal parameter data on the DRIVE-CLiQ Hub Module is incorrect.
Alarm value (r2124, interpret hexadecimal):
01: EEPROM access error.
02: Too many blocks in the EEPROM.
Remedy: - check whether the permissible ambient temperature for the component is maintained.
- replace the DRIVE-CLiQ Hub Module.
Reaction upon F: NONE
Acknowl. upon F: IMMEDIATELY (POWER ON)
Reaction upon N: NONE
Acknowl. upon N: NONE

© Siemens AG 2012 All Rights Reserved

F36820 Hub DRIVE-CLiQ: Telegram error

Message value: Component number: %1, fault cause: %2

Drive object: B_INF, HUB, VECTOR_G

Reaction: NONE

Acknowledge: IMMEDIATELY

Cause: A DRIVE-CLiQ communications error has occurred from the Control Unit to the DRIVE-CLiQ Hub Module involved.
Fault cause:
1 (= 01 hex):
Checksum error (CRC error).
2 (= 02 hex):
Telegram is shorter than specified in the length byte or in the receive list.
3 (= 03 hex):
Telegram is longer than specified in the length byte or in the receive list.
4 (= 04 hex):
The length of the receive telegram does not match the receive list.
5 (= 05 hex):
The type of the receive telegram does not match the receive list.
6 (= 06 hex):
The address of the component in the telegram and in the receive list do not match.
7 (= 07 hex):
A SYNC telegram is expected - but the received telegram is not a SYNC telegram.
8 (= 08 hex):
No SYNC telegram is expected - but the received telegram is one.
9 (= 09 hex):
The error bit in the receive telegram is set.
16 (= 10 hex):
The receive telegram is too early.
Note regarding the message value:
The individual information is coded as follows in the message value (r0949/r2124):
0000yyxx hex: yy = component number, xx = error cause

Remedy: - carry out a POWER ON (power off/on).
- check the electrical cabinet design and cable routing for EMC compliance
- check the DRIVE-CLiQ wiring (interrupted cable, contacts, ...).
See also: p9916 (DRIVE-CLiQ data transfer error shutdown threshold slave)

F36835 Hub DRIVE-CLiQ: Cyclic data transfer error

Message value: Component number: %1, fault cause: %2

Drive object: B_INF, HUB, VECTOR_G

Reaction: NONE

Acknowledge: IMMEDIATELY

Cause: A DRIVE-CLiQ communications error has occurred from the Control Unit to the DRIVE-CLiQ Hub Module involved.
The nodes do not send and receive in synchronism.
Fault cause:
33 (= 21 hex):
The cyclic telegram has not been received.
34 (= 22 hex):
Timeout in the telegram receive list.
64 (= 40 hex):
Timeout in the telegram send list.
Note regarding the message value:
The individual information is coded as follows in the message value (r0949/r2124):
0000yyxx hex: yy = component number, xx = error cause

Remedy: - carry out a POWER ON.
- replace the component involved.
See also: p9916 (DRIVE-CLiQ data transfer error shutdown threshold slave)

© Siemens AG 2012 All Rights Reserved

F36836 Hub DRIVE-CLiQ: Send error for DRIVE-CLiQ data

Message value: Component number: %1, fault cause: %2

Drive object: B_INF, HUB, VECTOR_G

Reaction: NONE

Acknowledge: IMMEDIATELY

Cause: A DRIVE-CLiQ communications error has occurred from the Control Unit to the DRIVE-CLiQ Hub Module involved.
Data were not able to be sent.
Fault cause:
65 (= 41 hex):
Telegram type does not match send list.
Note regarding the message value:
The individual information is coded as follows in the message value (r0949/r2124):
0000yyxx hex: yy = component number, xx = error cause

Remedy: Carry out a POWER ON.

F36837 Hub DRIVE-CLiQ: Component fault

Message value: Component number: %1, fault cause: %2

Drive object: B_INF, HUB, VECTOR_G

Reaction: NONE

Acknowledge: IMMEDIATELY

Cause: Fault detected on the DRIVE-CLiQ component concerned. Faulty hardware cannot be excluded.
Fault cause:
32 (= 20 hex):
Error in the telegram header.
35 (= 23 hex):
Receive error: The telegram buffer memory contains an error.
66 (= 42 hex):
Send error: The telegram buffer memory contains an error.
67 (= 43 hex):
Send error: The telegram buffer memory contains an error.
Note regarding the message value:
The individual information is coded as follows in the message value (r0949/r2124):
0000yyxx hex: yy = component number, xx = error cause

Remedy:
- check the DRIVE-CLiQ wiring (interrupted cable, contacts, ...).
- check the electrical cabinet design and cable routing for EMC compliance
- if required, use another DRIVE-CLiQ socket (p9904).
- replace the component involved.

F36845 Hub DRIVE-CLiQ: Cyclic data transfer error

Message value: Component number: %1, fault cause: %2

Drive object: B_INF, HUB, VECTOR_G

Reaction: NONE

Acknowledge: IMMEDIATELY

Cause: A DRIVE-CLiQ communications error has occurred from the Control Unit to the DRIVE-CLiQ Hub Module involved.
Fault cause:
11 (= 0B hex):
Synchronization error during alternating cyclic data transfer.
Note regarding the message value:
The individual information is coded as follows in the message value (r0949/r2124):
0000yyxx hex: yy = component number, xx = error cause

Remedy: Carry out a POWER ON.
See also: p9916 (DRIVE-CLiQ data transfer error shutdown threshold slave)

© Siemens AG 2012 All Rights Reserved

F36851 Hub DRIVE-CLiQ (CU): Sign-of-life missing

Message value: Component number: %1, fault cause: %2

Drive object: B_INF, HUB, TM150, TM31, VECTOR_G

Reaction: NONE

Acknowledge: IMMEDIATELY

Cause: DRIVE-CLiQ communication error from DRIVE-CLiQ Hub Module in question to Control Unit.
The DRIVE-CLiQ component did not set the sign-of-life to the Control Unit.
Fault cause:
10 (= 0A hex):
The sign-of-life bit in the receive telegram is not set.
Note regarding the message value:
The individual information is coded as follows in the message value (r0949/r2124):
0000yyxx hex: yy = component number, xx = error cause

Remedy: Upgrade the firmware of the component involved.

F36860 Hub DRIVE-CLiQ (CU): Telegram error

Message value: Component number: %1, fault cause: %2

Drive object: B_INF, HUB, TM150, TM31, VECTOR_G

Reaction: NONE

Acknowledge: IMMEDIATELY

Cause: DRIVE-CLiQ communication error from DRIVE-CLiQ Hub Module in question to Control Unit.
Fault cause:
1 (= 01 hex):
Checksum error (CRC error).
2 (= 02 hex):
Telegram is shorter than specified in the length byte or in the receive list.
3 (= 03 hex):
Telegram is longer than specified in the length byte or in the receive list.
4 (= 04 hex):
The length of the receive telegram does not match the receive list.
5 (= 05 hex):
The type of the receive telegram does not match the receive list.
6 (= 06 hex):
The address of the power unit in the telegram and in the receive list do not match.
9 (= 09 hex):
The error bit in the receive telegram is set.
16 (= 10 hex):
The receive telegram is too early.
17 (= 11 hex):
CRC error and the receive telegram is too early.
18 (= 12 hex):
The telegram is shorter than that specified in the length byte or in the receive list and the receive telegram is too early.
19 (= 13 hex):
The telegram is longer than that specified in the length byte or in the receive list and the receive telegram is too early.
20 (= 14 hex):
The length of the receive telegram does not match the receive list and the receive telegram is too early.
21 (= 15 hex):
The type of the receive telegram does not match the receive list and the receive telegram is too early.
22 (= 16 hex):
The address of the power unit in the telegram and in the receive list does not match and the receive telegram is too early.
25 (= 19 hex):
The error bit in the receive telegram is set and the receive telegram is too early.
Note regarding the message value:
The individual information is coded as follows in the message value (r0949/r2124):
0000yyxx hex: yy = component number, xx = error cause

Remedy:
- carry out a POWER ON (power off/on).
- check the electrical cabinet design and cable routing for EMC compliance
- check the DRIVE-CLiQ wiring (interrupted cable, contacts, ...).

© Siemens AG 2012 All Rights Reserved

F36875 HUB DRIVE-CLiQ (CU): Supply voltage failed

Message value: Component number: %1, fault cause: %2

Drive object: B_INF, HUB, TM150, TM31, VECTOR_G

Reaction: OFF1 (OFF2)

Acknowledge: IMMEDIATELY

Cause: The DRIVE-CLiQ communication from the DRIVE-CLiQ component involved to the Control Unit signals that the supply voltage has failed.
Fault cause:
9 (= 09 hex):
The power supply voltage for the components has failed.
Note regarding the message value:
The individual information is coded as follows in the message value (r0949/r2124):
0000yyxx hex: yy = component number, xx = error cause

Remedy: - carry out a POWER ON (power off/on).
- check the power supply voltage wiring for the DRIVE-CLiQ component (interrupted cable, contacts, ...).
- check the dimensioning of the power supply for the DRIVE-CLiQ component.

F36885 Hub DRIVE-CLiQ (CU): Cyclic data transfer error

Message value: Component number: %1, fault cause: %2

Drive object: B_INF, HUB, TM150, TM31, VECTOR_G

Reaction: NONE

Acknowledge: IMMEDIATELY

Cause: DRIVE-CLiQ communication error from DRIVE-CLiQ Hub Module in question to the Control Unit.
The nodes do not send and receive in synchronism.
Fault cause:
26 (= 1A hex):
Sign-of-life bit in the receive telegram not set and the receive telegram is too early.
33 (= 21 hex):
The cyclic telegram has not been received.
34 (= 22 hex):
Timeout in the telegram receive list.
64 (= 40 hex):
Timeout in the telegram send list.
98 (= 62 hex):
Error at the transition to cyclic operation.
Note regarding the message value:
The individual information is coded as follows in the message value (r0949/r2124):
0000yyxx hex: yy = component number, xx = error cause

Remedy: - check the supply voltage of the component involved.
- carry out a POWER ON.
- replace the component involved.

F36886 Hub DRIVE-CLiQ (CU): Error when sending DRIVE-CLiQ data

Message value: Component number: %1, fault cause: %2

Drive object: B_INF, HUB, TM150, TM31, VECTOR_G

Reaction: NONE

Acknowledge: IMMEDIATELY

Cause: DRIVE-CLiQ communication error from DRIVE-CLiQ Hub Module in question to Control Unit.
Data were not able to be sent.
Fault cause:
65 (= 41 hex):
Telegram type does not match send list.
Note regarding the message value:
The individual information is coded as follows in the message value (r0949/r2124):
0000yyxx hex: yy = component number, xx = error cause

Remedy: Carry out a POWER ON.

© Siemens AG 2012 All Rights Reserved

F36887 Hub DRIVE-CLiQ (CU): Component fault

Message value: Component number: %1, fault cause: %2

Drive object: B_INF, HUB, TM150, TM31, VECTOR_G

Reaction: NONE

Acknowledge: IMMEDIATELY

Cause: Fault detected on the DRIVE-CLiQ component (DRIVE-CLiQ Hub Module) involved. Faulty hardware cannot be excluded.
Fault cause:
32 (= 20 hex):
Error in the telegram header.
35 (= 23 hex):
Receive error: The telegram buffer memory contains an error.
66 (= 42 hex):
Send error: The telegram buffer memory contains an error.
67 (= 43 hex):
Send error: The telegram buffer memory contains an error.
96 (= 60 hex):
Response received too late during runtime measurement.
97 (= 61 hex):
Time taken to exchange characteristic data too long.
Note regarding the message value:
The individual information is coded as follows in the message value (r0949/r2124):
0000yyxx hex: yy = component number, xx = error cause

Remedy: - check the DRIVE-CLiQ wiring (interrupted cable, contacts, ...).
- check the electrical cabinet design and cable routing for EMC compliance
- if required, use another DRIVE-CLiQ socket (p9904).
- replace the component involved.

F36895 Hub DRIVE-CLiQ (CU): Alternating cyclic data transfer error

Message value: Component number: %1, fault cause: %2

Drive object: B_INF, HUB, TM150, TM31, VECTOR_G

Reaction: NONE

Acknowledge: IMMEDIATELY

Cause: DRIVE-CLiQ communication error from DRIVE-CLiQ Hub Module in question to Control Unit.
Fault cause:
11 (= 0B hex):
Synchronization error during alternating cyclic data transfer.
Note regarding the message value:
The individual information is coded as follows in the message value (r0949/r2124):
0000yyxx hex: yy = component number, xx = error cause

Remedy: Carry out a POWER ON.
See also: p9915 (DRIVE-CLiQ data transfer error shutdown threshold master)

F36896 Hub DRIVE-CLiQ (CU): Inconsistent component properties

Message value: Component number: %1

Drive object: B_INF, HUB, TM150, TM31, VECTOR_G

Reaction: NONE

Acknowledge: IMMEDIATELY

Cause: The properties of the DRIVE-CLiQ component (DRIVE-CLiQ Hub Module), specified by the fault value, have changed in an incompatible fashion with respect to the properties when booted. One cause can be, e.g. that a DRIVE-CLiQ cable or DRIVE-CLiQ component has been replaced.
Fault value (r0949, interpret decimal):
Component number.

Remedy: - carry out a POWER ON.
- when a component is replaced, the same component type and if possible the same firmware version should be used.
- when a cable is replaced, only cables whose length is the same as or as close as possible to the length of the original cables should be used (ensure compliance with the maximum cable length).

© Siemens AG 2012 All Rights Reserved

F36899 (N, A) Hub: Unknown fault

Message value: New message: %1

Drive object: B_INF, HUB, VECTOR_G

Reaction: Infeed: NONE (OFF1, OFF2)
Vector: NONE (IASC/DCBRAKE, OFF1, OFF2, OFF3, STOP1, STOP2)

Acknowledge: IMMEDIATELY (POWER ON)

Cause: A fault occurred on the DRIVE-CLiQ Hub Module that cannot be interpreted by the Control Unit firmware.
This can occur if the firmware on this component is more recent than the firmware on the Control Unit.
Fault value (r0949, interpret decimal):
Fault number.
Note:
If required, the significance of this new fault can be read about in a more recent description of the Control Unit.

Remedy: - replace the firmware on the DRIVE-CLiQ Hub Module with older firmware (r0158).
- upgrade the firmware on the Control Unit (r0018).

Reaction upon N: NONE

Acknowl. upon N: NONE

Reaction upon A: NONE

Acknowl. upon A: NONE

F36950 Hub: Internal software error

Message value: %1

Drive object: VECTOR_G

Reaction: OFF2 (NONE)

Acknowledge: POWER ON

Cause: An internal software error has occurred.
Fault value (r0949, interpret decimal):
Information about the fault source.
Only for internal Siemens troubleshooting.

Remedy: - if required, upgrade the firmware in the DRIVE-CLiQ hub module to a more recent version.
- contact the Hotline.

A36999 (F, N) Hub: Unknown alarm

Message value: New message: %1

Drive object: B_INF, HUB, VECTOR_G

Reaction: NONE

Acknowledge: NONE

Cause: An alarm occurred on the DRIVE-CLiQ Hub Module that cannot be interpreted by the Control Unit firmware.
This can occur if the firmware on this component is more recent than the firmware on the Control Unit.
Alarm value (r2124, interpret decimal):
Alarm number.
Note:
If required, the significance of this new alarm can be read about in a more recent description of the Control Unit.

Remedy: - replace the firmware on the DRIVE-CLiQ Hub Module with older firmware (r0158).
- upgrade the firmware on the Control Unit (r0018).

Reaction upon F: Infeed: NONE (OFF1, OFF2)
Vector: NONE (IASC/DCBRAKE, OFF1, OFF2, OFF3, STOP1, STOP2)

Acknowl. upon F: IMMEDIATELY (POWER ON)

Reaction upon N: NONE

Acknowl. upon N: NONE

F40000 Fault at DRIVE-CLiQ socket X100

Message value: %1

Drive object: All objects

Reaction: NONE

Acknowledge: IMMEDIATELY

Cause: A fault has occurred at the drive object at the DRIVE-CLiQ socket X100.

© Siemens AG 2012 All Rights Reserved

Fault value (r0949, interpret decimal):
First fault that has occurred for this drive object.

Remedy: Evaluate the fault buffer of the specified object.

F40001 Fault at DRIVE-CLiQ socket X101

Message value: %1

Drive object: All objects

Reaction: NONE

Acknowledge: IMMEDIATELY

Cause: A fault has occurred at the drive object at the DRIVE-CLiQ socket X101.
Fault value (r0949, interpret decimal):
First fault that has occurred for this drive object.

Remedy: Evaluate the fault buffer of the specified object.

F40002 Fault at DRIVE-CLiQ socket X102

Message value: %1

Drive object: All objects

Reaction: NONE

Acknowledge: IMMEDIATELY

Cause: A fault has occurred at the drive object at the DRIVE-CLiQ socket X102.
Fault value (r0949, interpret decimal):
First fault that has occurred for this drive object.

Remedy: Evaluate the fault buffer of the specified object.

F40003 Fault at DRIVE-CLiQ socket X103

Message value: %1

Drive object: All objects

Reaction: NONE

Acknowledge: IMMEDIATELY

Cause: A fault has occurred at the drive object at the DRIVE-CLiQ socket X103.
Fault value (r0949, interpret decimal):
First fault that has occurred for this drive object.

Remedy: Evaluate the fault buffer of the specified object.

F40004 Fault at DRIVE-CLiQ socket X104

Message value: %1

Drive object: All objects

Reaction: NONE

Acknowledge: IMMEDIATELY

Cause: A fault has occurred at the drive object at the DRIVE-CLiQ socket X104.
Fault value (r0949, interpret decimal):
First fault that has occurred for this drive object.

Remedy: Evaluate the fault buffer of the specified object.

F40005 Fault at DRIVE-CLiQ socket X105

Message value: %1

Drive object: All objects

Reaction: NONE

Acknowledge: IMMEDIATELY

Cause: A fault has occurred at the drive object at the DRIVE-CLiQ socket X105.
Fault value (r0949, interpret decimal):
First fault that has occurred for this drive object.

Remedy: Evaluate the fault buffer of the specified object.

© Siemens AG 2012 All Rights Reserved

A40100 Alarm at DRIVE-CLiQ socket X100

Message value: %1
Drive object: All objects
Reaction: NONE
Acknowledge: NONE
Cause: An alarm has occurred at the drive object at the DRIVE-CLiQ socket X100.
Alarm value (r2124, interpret decimal):
First alarm that has occurred for this drive object.
Remedy: Evaluate the alarm buffer of the specified object.

A40101 Alarm at DRIVE-CLiQ socket X101

Message value: %1
Drive object: All objects
Reaction: NONE
Acknowledge: NONE
Cause: An alarm has occurred at the drive object at the DRIVE-CLiQ socket X101.
Alarm value (r2124, interpret decimal):
First alarm that has occurred for this drive object.
Remedy: Evaluate the alarm buffer of the specified object.

A40102 Alarm at DRIVE-CLiQ socket X102

Message value: %1
Drive object: All objects
Reaction: NONE
Acknowledge: NONE
Cause: An alarm has occurred at the drive object at the DRIVE-CLiQ socket X102.
Alarm value (r2124, interpret decimal):
First alarm that has occurred for this drive object.
Remedy: Evaluate the alarm buffer of the specified object.

A40103 Alarm at DRIVE-CLiQ socket X103

Message value: %1
Drive object: All objects
Reaction: NONE
Acknowledge: NONE
Cause: An alarm has occurred at the drive object at the DRIVE-CLiQ socket X103.
Alarm value (r2124, interpret decimal):
First alarm that has occurred for this drive object.
Remedy: Evaluate the alarm buffer of the specified object.

A40104 Alarm at DRIVE-CLiQ socket X104

Message value: %1
Drive object: All objects
Reaction: NONE
Acknowledge: NONE
Cause: An alarm has occurred at the drive object at the DRIVE-CLiQ socket X104.
Alarm value (r2124, interpret decimal):
First alarm that has occurred for this drive object.
Remedy: Evaluate the alarm buffer of the specified object.

© Siemens AG 2012 All Rights Reserved

A40105 Alarm at DRIVE-CLiQ socket X105

Message value: %1
Drive object: All objects
Reaction: NONE
Acknowledge: NONE
Cause: An alarm has occurred at the drive object at the DRIVE-CLiQ socket X105.
Alarm value (r2124, interpret decimal):
First alarm that has occurred for this drive object.
Remedy: Evaluate the alarm buffer of the specified object.

F40799 CX32: Configured transfer end time exceeded

Message value: -
Drive object: All objects
Reaction: NONE
Acknowledge: IMMEDIATELY
Cause: The configured transfer end time when transferring the cyclic actual values was exceeded.
Remedy: - carry out a POWER ON (power off/on) for all components.
- contact the Hotline.

F40801 CX32 DRIVE-CLiQ: Sign-of-life missing

Message value: Component number: %1, fault cause: %2
Drive object: All objects
Reaction: OFF2
Acknowledge: IMMEDIATELY
Cause: A DRIVE-CLiQ communications error has occurred from the Control Unit to the controller extension involved.
Fault cause:
10 (= 0A hex):
The sign-of-life bit in the receive telegram is not set.
Note regarding the message value:
The individual information is coded as follows in the message value (r0949/r2124):
0000yyxx hex: yy = component number, xx = error cause
Remedy: - carry out a POWER ON (power off/on).
- replace the component involved.
See also: p9916 (DRIVE-CLiQ data transfer error shutdown threshold slave)

F40820 CX32 DRIVE-CLiQ: Telegram error

Message value: Component number: %1, fault cause: %2
Drive object: All objects
Reaction: OFF2
Acknowledge: IMMEDIATELY
Cause: A DRIVE-CLiQ communications error has occurred from the Control Unit to the controller extension involved.
Fault cause:
1 (= 01 hex):
Checksum error (CRC error).
2 (= 02 hex):
Telegram is shorter than specified in the length byte or in the receive list.
3 (= 03 hex):
Telegram is longer than specified in the length byte or in the receive list.
4 (= 04 hex):
The length of the receive telegram does not match the receive list.
5 (= 05 hex):
The type of the receive telegram does not match the receive list.
6 (= 06 hex):
The address of the component in the telegram and in the receive list do not match.
7 (= 07 hex):
A SYNC telegram is expected - but the received telegram is not a SYNC telegram.
8 (= 08 hex):
No SYNC telegram is expected - but the received telegram is one.

© Siemens AG 2012 All Rights Reserved

9 (= 09 hex):
The error bit in the receive telegram is set.
16 (= 10 hex):
The receive telegram is too early.
Note regarding the message value:
The individual information is coded as follows in the message value (r0949/r2124):
0000yyxx hex: yy = component number, xx = error cause

Remedy: - carry out a POWER ON (power off/on).
- check the electrical cabinet design and cable routing for EMC compliance
- check the DRIVE-CLiQ wiring (interrupted cable, contacts, ...).
See also: p9916 (DRIVE-CLiQ data transfer error shutdown threshold slave)

F40825 CX32 DRIVE-CLiQ: Supply voltage failed

Message value: Component number: %1, fault cause: %2

Drive object: All objects

Reaction: OFF1 (OFF2)

Acknowledge: IMMEDIATELY

Cause: The DRIVE-CLiQ communication from the DRIVE-CLiQ component involved to the Control Unit signals that the supply voltage has failed.
Fault cause:
9 (= 09 hex):
The power supply voltage for the components has failed.
Note regarding the message value:
The individual information is coded as follows in the message value (r0949/r2124):
0000yyxx hex: yy = component number, xx = error cause

Remedy: - carry out a POWER ON (power off/on).
- check the supply voltage wiring of the DRIVE-CLiQ component (interrupted cable, contacts, ...).
- check the dimensioning of the DRIVE-CLiQ component power supply.

F40835 CX32 DRIVE-CLiQ: Cyclic data transfer error

Message value: Component number: %1, fault cause: %2

Drive object: All objects

Reaction: OFF2

Acknowledge: IMMEDIATELY

Cause: A DRIVE-CLiQ communications error has occurred from the Control Unit to the controller extension involved. The nodes do not send and receive in synchronism.
Fault cause:
33 (= 21 hex):
The cyclic telegram has not been received.
34 (= 22 hex):
Timeout in the telegram receive list.
64 (= 40 hex):
Timeout in the telegram send list.
Note regarding the message value:
The individual information is coded as follows in the message value (r0949/r2124):
0000yyxx hex: yy = component number, xx = error cause

Remedy: - carry out a POWER ON (power off/on).
- replace the component involved.
See also: p9916 (DRIVE-CLiQ data transfer error shutdown threshold slave)

F40836 CX32 DRIVE-CLiQ: Send error for DRIVE-CLiQ data

Message value: Component number: %1, fault cause: %2

Drive object: All objects

Reaction: OFF2

Acknowledge: IMMEDIATELY

Cause: A DRIVE-CLiQ communications error has occurred from the Control Unit to the controller extension involved. Data were not able to be sent.

© Siemens AG 2012 All Rights Reserved

Fault cause:
65 (= 41 hex):
Telegram type does not match send list.
Note regarding the message value:
The individual information is coded as follows in the message value (r0949/r2124):
0000yyxx hex: yy = component number, xx = error cause

Remedy: Carry out a POWER ON (power off/on).

F40837 CX32 DRIVE-CLiQ: Component fault

Message value: Component number: %1, fault cause: %2

Drive object: All objects

Reaction: OFF2

Acknowledge: IMMEDIATELY

Cause: Fault detected on the DRIVE-CLiQ component concerned. Faulty hardware cannot be excluded.
Fault cause:
32 (= 20 hex):
Error in the telegram header.
35 (= 23 hex):
Receive error: The telegram buffer memory contains an error.
66 (= 42 hex):
Send error: The telegram buffer memory contains an error.
67 (= 43 hex):
Send error: The telegram buffer memory contains an error.
Note regarding the message value:
The individual information is coded as follows in the message value (r0949/r2124):
0000yyxx hex: yy = component number, xx = error cause

Remedy:
- check the DRIVE-CLiQ wiring (interrupted cable, contacts, ...).
- check the electrical cabinet design and cable routing for EMC compliance
- if required, use another DRIVE-CLiQ socket (p9904).
- replace the component involved.

F40845 CX32 DRIVE-CLiQ: Cyclic data transfer error

Message value: Component number: %1, fault cause: %2

Drive object: All objects

Reaction: OFF2

Acknowledge: IMMEDIATELY

Cause: A DRIVE-CLiQ communications error has occurred from the Control Unit to the controller extension involved.
Fault cause:
11 (= 0B hex):
Synchronization error during alternating cyclic data transfer.
Note regarding the message value:
The individual information is coded as follows in the message value (r0949/r2124):
0000yyxx hex: yy = component number, xx = error cause

Remedy: Carry out a POWER ON (power off/on).
See also: p9916 (DRIVE-CLiQ data transfer error shutdown threshold slave)

F40851 CX32 DRIVE-CLiQ (CU): Sign-of-life missing

Message value: Component number: %1, fault cause: %2

Drive object: All objects

Reaction: OFF2

Acknowledge: IMMEDIATELY

Cause: A DRIVE-CLiQ communications error has occurred from the controller extension involved to the Control Unit.
The DRIVE-CLiQ component did not set the sign-of-life to the Control Unit.
Fault cause:
10 (= 0A hex):
The sign-of-life bit in the receive telegram is not set.
Note regarding the message value:
The individual information is coded as follows in the message value (r0949/r2124):
0000yyxx hex: yy = component number, xx = error cause

© Siemens AG 2012 All Rights Reserved

Remedy: Upgrade the firmware of the component involved.

F40860 CX32 DRIVE-CLiQ (CU): Telegram error

Message value: Component number: %1, fault cause: %2

Drive object: All objects

Reaction: OFF2

Acknowledge: IMMEDIATELY

Cause: A DRIVE-CLiQ communications error has occurred from the controller extension involved to the Control Unit.
Fault cause:
1 (= 01 hex):
Checksum error (CRC error).
2 (= 02 hex):
Telegram is shorter than specified in the length byte or in the receive list.
3 (= 03 hex):
Telegram is longer than specified in the length byte or in the receive list.
4 (= 04 hex):
The length of the receive telegram does not match the receive list.
5 (= 05 hex):
The type of the receive telegram does not match the receive list.
6 (= 06 hex):
The address of the power unit in the telegram and in the receive list do not match.
9 (= 09 hex):
The error bit in the receive telegram is set.
16 (= 10 hex):
The receive telegram is too early.
17 (= 11 hex):
CRC error and the receive telegram is too early.
18 (= 12 hex):
The telegram is shorter than that specified in the length byte or in the receive list and the receive telegram is too early.
19 (= 13 hex):
The telegram is longer than that specified in the length byte or in the receive list and the receive telegram is too early.
20 (= 14 hex):
The length of the receive telegram does not match the receive list and the receive telegram is too early.
21 (= 15 hex):
The type of the receive telegram does not match the receive list and the receive telegram is too early.
22 (= 16 hex):
The address of the power unit in the telegram and in the receive list does not match and the receive telegram is too early.
25 (= 19 hex):
The error bit in the receive telegram is set and the receive telegram is too early.
Note regarding the message value:
The individual information is coded as follows in the message value (r0949/r2124):
0000yyxx hex: yy = component number, xx = error cause

Remedy: - carry out a POWER ON (power off/on).
- check the electrical cabinet design and cable routing for EMC compliance
- check the DRIVE-CLiQ wiring (interrupted cable, contacts, ...).
See also: p9915 (DRIVE-CLiQ data transfer error shutdown threshold master)

F40875 CX32 DRIVE-CLiQ (CU): Supply voltage failed

Message value: Component number: %1, fault cause: %2

Drive object: All objects

Reaction: OFF1 (OFF2)

Acknowledge: IMMEDIATELY

Cause: The DRIVE-CLiQ communication from the DRIVE-CLiQ component involved to the Control Unit signals that the supply voltage has failed.
Fault cause:
9 (= 09 hex):
The power supply voltage for the components has failed.
Note regarding the message value:
The individual information is coded as follows in the message value (r0949/r2124):
0000yyxx hex: yy = component number, xx = error cause

© Siemens AG 2012 All Rights Reserved

Remedy: - carry out a POWER ON (power off/on).
- check the supply voltage wiring of the DRIVE-CLiQ component (interrupted cable, contacts, ...).
- check the dimensioning of the DRIVE-CLiQ component power supply.

F40885 CX32 DRIVE-CLiQ (CU): Cyclic data transfer error

Message value: Component number: %1, fault cause: %2

Drive object: All objects

Reaction: OFF2

Acknowledge: IMMEDIATELY

Cause: A DRIVE-CLiQ communications error has occurred from the controller extension involved to the Control Unit.
The nodes do not send and receive in synchronism.
Fault cause:
26 (= 1A hex):
Sign-of-life bit in the receive telegram not set and the receive telegram is too early.
33 (= 21 hex):
The cyclic telegram has not been received.
34 (= 22 hex):
Timeout in the telegram receive list.
64 (= 40 hex):
Timeout in the telegram send list.
98 (= 62 hex):
Error at the transition to cyclic operation.
Note regarding the message value:
The individual information is coded as follows in the message value (r0949/r2124):
0000yyxx hex: yy = component number, xx = error cause

Remedy: - check the power supply voltage of the component involved.
- carry out a POWER ON (power off/on).
- replace the component involved.
See also: p9915 (DRIVE-CLiQ data transfer error shutdown threshold master)

F40886 CX32 DRIVE-CLiQ (CU): Error when sending DRIVE-CLiQ data

Message value: Component number: %1, fault cause: %2

Drive object: All objects

Reaction: OFF2

Acknowledge: IMMEDIATELY

Cause: A DRIVE-CLiQ communications error has occurred from the controller extension involved to the Control Unit.
Data were not able to be sent.
Fault cause:
65 (= 41 hex):
Telegram type does not match send list.
Note regarding the message value:
The individual information is coded as follows in the message value (r0949/r2124):
0000yyxx hex: yy = component number, xx = error cause

Remedy: Carry out a POWER ON (power off/on).

F40887 CX32 DRIVE-CLiQ (CU): Component fault

Message value: Component number: %1, fault cause: %2

Drive object: All objects

Reaction: OFF2

Acknowledge: IMMEDIATELY

Cause: Fault detected on the DRIVE-CLiQ component concerned. Faulty hardware cannot be excluded.
Fault cause:
32 (= 20 hex):
Error in the telegram header.
35 (= 23 hex):
Receive error: The telegram buffer memory contains an error.
66 (= 42 hex):
Send error: The telegram buffer memory contains an error.
67 (= 43 hex):
Send error: The telegram buffer memory contains an error.

© Siemens AG 2012 All Rights Reserved

96 (= 60 hex):
Response received too late during runtime measurement.
97 (= 61 hex):
Time taken to exchange characteristic data too long.
Note regarding the message value:
The individual information is coded as follows in the message value (r0949/r2124):
0000yyxx hex: yy = component number, xx = error cause

Remedy: - check the DRIVE-CLiQ wiring (interrupted cable, contacts, ...).
- check the electrical cabinet design and cable routing for EMC compliance
- if required, use another DRIVE-CLiQ socket (p9904).
- replace the component involved.

F40895 CX32 DRIVE-CLiQ (CU): Cyclic data transfer error

Message value: Component number: %1, fault cause: %2

Drive object: All objects

Reaction: OFF2

Acknowledge: IMMEDIATELY

Cause: A DRIVE-CLiQ communications error has occurred from the controller extension involved to the Control Unit.
Fault cause:
11 (= 0B hex):
Synchronization error during alternating cyclic data transfer.
Note regarding the message value:
The individual information is coded as follows in the message value (r0949/r2124):
0000yyxx hex: yy = component number, xx = error cause

Remedy: Carry out a POWER ON (power off/on).
See also: p9915 (DRIVE-CLiQ data transfer error shutdown threshold master)

F49150 Cooling unit: Fault occurred

Message value: -

Drive object: B_INF, VECTOR_G

Reaction: OFF2

Acknowledge: IMMEDIATELY

Cause: The cooling unit signals a general fault.

Remedy: - check the wiring between the cooling unit and the input terminal (Terminal Module).
- check the external control device for the cooling unit.
See also: p0266 (Cooling unit, feedback signals, signal source)

F49151 Cooling unit: Conductivity has exceeded the fault threshold

Message value: -

Drive object: B_INF, VECTOR_G

Reaction: OFF2

Acknowledge: IMMEDIATELY

Cause: The conductivity of the cooling liquid has exceeded the selected fault threshold (p0269[2]).
See also: p0261 (Cooling unit, starting time 2), p0262 (Cooling unit, fault conductivity delay time), p0266 (Cooling unit, feedback signals, signal source)

Remedy: Check the device to de-ionize the cooling liquid.

F49152 Cooling unit: ON command feedback signal missing

Message value: -

Drive object: B_INF, VECTOR_G

Reaction: OFF2

Acknowledge: IMMEDIATELY

Cause: The feedback signal of the ON command of the cooling unit is missing.
- after the ON command, the feedback signal has not been received within the selected starting time (p0260).
- the feedback signal has failed in operation.
See also: p0260 (Cooling unit, starting time 1), r0267 (Cooling unit status word)

Remedy: - check the wiring between the cooling unit and the input terminal (Terminal Module).
- check the external control device for the cooling unit.

© Siemens AG 2012 All Rights Reserved

F49153 Cooling unit: Liquid flow too low

Message value: -
Drive object: B_INF, VECTOR_G
Reaction: OFF2
Acknowledge: IMMEDIATELY
Cause: The drive converter cooling unit signals that the cooling liquid flow is too low.
- after the ON command, the feedback signal has not been received within the selected starting time (p0260).
- in operation, the feedback signal has failed for longer than the permitted failure time (p0263).
See also: p0260 (Cooling unit, starting time 1), p0263 (Cooling unit fault liquid flow, delay time), r0267 (Cooling unit status word)
Remedy: - check the wiring between the cooling unit and the input terminal (Terminal Module).
- check the external control device for the cooling unit.

F49154 (A) Cooling unit: Liquid leak is present

Message value: -
Drive object: B_INF, VECTOR_G
Reaction: OFF2
Acknowledge: IMMEDIATELY
Cause: The liquid leakage monitoring function has responded.
Caution:
If this fault is re-parameterized as an alarm then using other monitoring functions it must be ensured that when cooling water is lost, the drive is powered down!
See also: r0267 (Cooling unit status word)
Remedy: - check the cooling system for leaks in the cooling circuit.
- check the wiring of the input terminal (Terminal Module) used to monitor leaking fluid.
Reaction upon A: NONE
Acknowl. upon A: NONE

F49155 Cooling unit: Power Stack Adapter, firmware version too old

Message value: -
Drive object: B_INF, VECTOR_G
Reaction: OFF2
Acknowledge: POWER ON
Cause: The firmware version in the Power Stack Adapter (PSA) is too old and does not support the liquid cooling.
Remedy: Upgrade the firmware. Check EEPROM data.

F49156 Cooling unit: Cooling liquid temperature has exceeded the fault threshold

Message value: -
Drive object: B_INF, VECTOR_G
Reaction: OFF2
Acknowledge: IMMEDIATELY
Cause: The cooling liquid intake temperature has exceeded the permanently set fault threshold.
Remedy: Check the cooling system and the ambient conditions.

A49170 Cooling unit: Alarm has occurred

Message value: -
Drive object: B_INF, VECTOR_G
Reaction: NONE
Acknowledge: NONE
Cause: The cooling unit signals a general alarm.
Remedy: - check the wiring between the cooling unit and the input terminal (Terminal Module).
- check the external control device for the cooling unit.

© Siemens AG 2012 All Rights Reserved

A49171 Cooling unit: Conductivity has exceeded the alarm threshold

Message value: -
Drive object: B_INF
Reaction: NONE
Acknowledge: NONE
Cause: The conductivity of the cooling liquid has exceeded the selected alarm threshold (p0269[1]).
The threshold cannot be set higher than the fault threshold specified in the equipment description.
Remedy: Check the device to de-ionize the cooling liquid.

A49171 Cooling unit: Conductivity has exceeded the alarm threshold

Message value: -
Drive object: VECTOR_G
Reaction: NONE
Acknowledge: NONE
Cause: Conductivity monitoring is set for the cooling liquid (r0267.7, from p0266[7]).
See also: p0261 (Cooling unit, starting time 2), p0262 (Cooling unit, fault conductivity delay time), p0266 (Cooling unit, feedback signals, signal source), r0267 (Cooling unit status word)
Remedy: Check the device to de-ionize the cooling liquid.

A49172 Cooling unit: Conductivity actual value is not valid

Message value: -
Drive object: B_INF, VECTOR_G
Reaction: NONE
Acknowledge: NONE
Cause: When monitoring the conductivity of the cooling liquid, there is a fault in the wiring or in the sensor.
Remedy: - check the wiring between the cooling unit and the Power Stack Adapter (PSA).
- check the function of the sensor to measure the conductivity.

A49173 Cooling unit: Cooling liquid temperature has exceeded the alarm threshold

Message value: -
Drive object: B_INF, VECTOR_G
Reaction: NONE
Acknowledge: NONE
Cause: The cooling liquid intake temperature has exceeded the specified alarm threshold.
Remedy: Check the cooling system and the ambient conditions.

F49200 Excitation group signal fault

Message value: %1
Drive object: VECTOR_G
Reaction: OFF2
Acknowledge: IMMEDIATELY
Cause: The excitation sequence control signals a fault.
Fault value (r0949, interpret hexadecimal):
Bit 0:
When powered down or when powering down the excitation, the signal "excitation ready feedback signal" was not received within the monitoring time.
Bit 1:
After an ON command, the signal "excitation ready feedback signal" was not received within the monitoring time.
Bit 2:
After the pulses were enabled, the signal "excitation operational feedback signal" was not received within the monitoring time.
Bit 3:
The "excitation group signal fault" signal is present.
Remedy: - check the excitation.
- check commands, feedback signals and BICO interconnections.

© Siemens AG 2012 All Rights Reserved

A49201 (F) Excitation group signal alarm

Message value: -
Drive object: VECTOR_G
Reaction: NONE
Acknowledge: NONE
Cause: The "excitation group signal alarm" signal is present.
Remedy: Check the excitation equipment.
Reaction upon F: NONE
Acknowl. upon F: IMMEDIATELY

A50001 (F) COMM BOARD: Alarm 1

Message value: %1
Drive object: All objects
Reaction: NONE
Acknowledge: NONE
Cause: CBE20:
A PROFINET controller attempts to establish a connection using an incorrect configuring telegram. The "Shared Device" function has been activated (p8829 = 2).
Alarm value (r2124, interpret decimal):
10: A CPU sends a PROFIsafe telegram.
11: F CPU sends a PZD telegram.
12: F CPU without an A CPU.
13: F CPU with more PROFIsafe subslots than activated with p9601.3.
14: F CPU with fewer PROFIsafe subslots than activated with p9601.3.
15: PROFIsafe telegram of the F-CPU does not match the setting in p60022.
See also: p8829 (CBE20 remote controller number), p9601 (SI enable, functions integrated in the drive (Control Unit))
Remedy: CBE20:
Check the configuration of the PROFINET controllers as well as the p8829 and p9601.3 setting.
Reaction upon F: Infeed: NONE (OFF1, OFF2)
Vector: NONE (OFF1, OFF2, OFF3)
Acknowl. upon F: IMMEDIATELY

A50002 (F) COMM BOARD: Alarm 2

Message value: %1
Drive object: All objects
Reaction: NONE
Acknowledge: NONE
Cause: In the case of CBE20 SINAMICS Link:
A specific telegram word (send) is being used twice.
Alarm value (r2124, interpret decimal):
Telegram word used twice
See also: p8871 (SINAMICS Link send telegram word PZD)
Remedy: In the case of CBE20 SINAMICS Link:
Correct the parameter assignment.
See also: p8871 (SINAMICS Link send telegram word PZD)
Reaction upon F: Infeed: NONE (OFF1, OFF2)
Vector: NONE (OFF1, OFF2, OFF3)
Acknowl. upon F: IMMEDIATELY

A50003 (F) COMM BOARD: Alarm 3

Message value: Info. 1: %1, info. 2: %2
Drive object: All objects
Reaction: NONE
Acknowledge: NONE
Cause: In the case of CBE20 SINAMICS Link:
A specific telegram word (receive) is being used twice.

© Siemens AG 2012 All Rights Reserved

Alarm value (r2124, interpret hexadecimal):
yyyyxxxx hex: yyyy = info. 1, xxxx = info. 2
Info. 1 (decimal) = Address of sender
Info. 2 (decimal) = Receive telegram word
See also: p8870 (SINAMICS Link receive telegram word PZD), p8872 (SINAMICS Link address receive PZD)

Remedy: In the case of CBE20 SINAMICS Link:
Correct the parameter assignment.

Reaction upon F: Infeed: NONE (OFF1, OFF2)
Vector: NONE (OFF1, OFF2, OFF3)

Acknowl. upon F: IMMEDIATELY

A50004 (F) COMM BOARD: Alarm 4

Message value: Info. 1: %1, info. 2: %2

Drive object: All objects

Reaction: NONE

Acknowledge: NONE

Cause: In the case of CBE20 SINAMICS Link:
Telegram word (receive) and address of sender inconsistent. Both values have to be either equal to zero or not equal to zero.
Alarm value (r2124, interpret hexadecimal):
yyyyxxxx hex: yyyy = info. 1, xxxx = info. 2
Info. 1 (decimal) = Drive object number from p8870, p8872
Info. 2 (decimal) = Index from p8870, p8872
See also: p8870 (SINAMICS Link receive telegram word PZD), p8872 (SINAMICS Link address receive PZD)

Remedy: In the case of CBE20 SINAMICS Link:
Correct the parameter assignment.

Reaction upon F: Infeed: NONE (OFF1, OFF2)
Vector: NONE (OFF1, OFF2, OFF3)

Acknowl. upon F: IMMEDIATELY

A50005 (F) COMM BOARD: Alarm 5

Message value: %1

Drive object: All objects

Reaction: NONE

Acknowledge: NONE

Cause: In the case of CBE20 SINAMICS Link:
Sender not found on SINAMICS Link.
Alarm value (r2124, interpret decimal):
Address of sender that cannot be located
See also: p8872 (SINAMICS Link address receive PZD)

Remedy: In the case of CBE20 SINAMICS Link:
Check the connection to the sender.

Reaction upon F: Infeed: NONE (OFF1, OFF2)
Vector: NONE (OFF1, OFF2, OFF3)

Acknowl. upon F: IMMEDIATELY

A50006 (F) COMM BOARD: Alarm 6

Message value: Info. 1: %1, info. 2: %2

Drive object: All objects

Reaction: NONE

Acknowledge: NONE

Cause: In the case of CBE20 SINAMICS Link:
The parameter assignment indicates that the sender and the receiver are one and the same. This is not permitted.
Alarm value (r2124, interpret hexadecimal):
yyyyxxxx hex: yyyy = info. 1, xxxx = info. 2
Info. 1 (decimal) = Drive object number from p8872
Info. 2 (decimal) = Index from p8872
See also: p8836 (SINAMICS Link address), p8872 (SINAMICS Link address receive PZD)

© Siemens AG 2012 All Rights Reserved

Remedy: In the case of CBE20 SINAMICS Link:
Correct the parameter assignment. All p8872[index] must be set to a value not equal to p8836.

Reaction upon F: Infeed: NONE (OFF1, OFF2)
Vector: NONE (OFF1, OFF2, OFF3)

Acknowl. upon F: IMMEDIATELY

A50010 (F) COMM BOARD: Alarm 10

Message value: %1

Drive object: All objects

Reaction: NONE

Acknowledge: NONE

Cause: CBE20:
PROFINET Name of Station is invalid.

Remedy: CBE20:
Correct the name of the station (p8940) and activate (p8945 = 2).
See also: p8940 (CBE20 Name of Station)

Reaction upon F: Infeed: NONE (OFF1, OFF2)
Vector: NONE (OFF1, OFF2, OFF3)

Acknowl. upon F: IMMEDIATELY

A50020 (F) COMM BOARD: Alarm 20

Message value: -

Drive object: All objects

Reaction: NONE

Acknowledge: NONE

Cause: CBE20: The PROFINET "Shared Device" function has been activated (p8829 = 2). However, only the connection to a PROFINET controller is present.
See also: p8829 (CBE20 remote controller number)

Remedy: CBE20: Check the configuration of the PROFINET controllers, as well as the p8829 setting.

Reaction upon F: Infeed: NONE (OFF1, OFF2)
Vector: NONE (OFF1, OFF2, OFF3)

Acknowl. upon F: IMMEDIATELY

© Siemens AG 2012 All Rights Reserved

© Siemens AG 2012 All Rights Reserved

Appendix A

Contents

A.1 ASCII table (excerpt) A-1658

© Siemens AG 2012 All Rights Reserved

A.1 ASCII table (excerpt)

The following table includes the decimal and hexadecimal notation of selected ASCII characters.

Table A-1 ASCII table (excerpt)

Character	Decimal	Hexadecimal	Character	Decimal	Hexadecimal
Blank	32	20	G	71	47
*	42	2A	H	72	48
+	43	2B	I	73	49
-	45	2D	J	74	4A
0	48	30	K	75	4B
1	49	31	L	76	4C
2	50	32	M	77	4D
3	51	33	N	78	4E
4	52	34	O	79	4F
5	53	35	P	80	50
6	54	36	Q	81	51
7	55	37	R	82	52
8	56	38	S	83	53
9	57	39	T	84	54
A	65	41	U	85	55
B	66	42	V	86	56
C	67	43	W	87	57
D	68	44	X	88	58
E	69	45	Y	89	59
F	70	46	Z	90	5A

© Siemens AG 2012 All Rights Reserved

List of abbreviations

B

Note:

The following list of abbreviations includes all abbreviations and their meanings used in the entire SINAMICS family of drives.

Abbreviation	Source of abbreviation	Meaning
A		
A...	Alarm	Alarm
AC	Alternating Current	Alternating current
ADC	Analog Digital Converter	Analog-digital converter
AI	Analog Input	Analog input
AIM	Active Interface Module	Active Interface Module
ALM	Active Line Module	Active Line Module
AO	Analog Output	Analog output
AOP	Advanced Operator Panel	Advanced Operator Panel
APC	Advanced Positioning Control	Advanced Positioning Control
AR	Automatic Restart	Automatic restart
ASC	Armature Short-Circuit	Armature short-circuit
ASCII	American Standard Code for Information Interchange	American Standard Code for Information Interchange
ASM	Asynchronmotor	Induction motor
B		
BB	Betriebsbedingung	Operating condition
BERO	-	Contact-free proximity switch
BI	Binector Input	Binector input
BIA	Berufsgenossenschaftliches Institut für Arbeitssicherheit	Germany's Institute for Occupational Safety and Health
BICO	Binector Connector Technology	Binector connector technology
BLM	Basic Line Module	Basic Line Module
BO	Binector Output	Binector output
BOP	Basic Operator Panel	Basic Operator Panel
C		
C	Capacitance	Capacitance
C...	-	Safety message
CAN	Controller Area Network	Serial bus system

© Siemens AG 2012 All Rights Reserved

Abbreviation	Source of abbreviation	Meaning
CBC	Communication Board CAN	Communication Board CAN
CD	Compact Disk	Compact disk
CDS	Command Data Set	Command data set
CF Card	CompactFlash Card	CompactFlash memory card
CI	Connector Input	Connector input
CLC	Clearance Control	Clearance control
CNC	Computer Numerical Control	Computerized numerical control
CO	Connector Output	Connector output
CO/BO	Connector Output/Binector Output	Connector output/binector output
COB ID	CAN Object Identification	CAN object identification
COM	Common contact of a changeover relay	Center contact on a changeover contact
COMM	Commissioning	Commissioning
CP	Communications Processor	Communication processor
CPU	Central Processing Unit	Central processing unit
CRC	Cyclic Redundancy Check	Cyclic redundancy check
CSM	Control Supply Module	Control Supply Module
CU	Control Unit	Control Unit
CUA	Control Unit Adapter	Control Unit Adapter
CUD	Control Unit DC MASTER	Control Unit DC MASTER
D		
DAC	Digital Analog Converter	D-A converter
DC	Direct Current	Direct current
DCB	Drive Control Block	Drive Control Block
DCBRK	DC Brake	DC braking
DCC	Drive Control Chart	Drive Control Chart
DCN	Direct Current Negative	Direct current negative
DCP	Direct Current Positive	Direct current positive
DDS	Drive Data Set	Drive data set
DI	Digital Input	Digital input
DI/DO	Digital Input/Digital Output	Digital input/digital output, bidirectional
DMC	DRIVE-CLiQ Hub Module Cabinet	DRIVE-CLiQ Hub Module Cabinet
DME	DRIVE-CLiQ Hub Module External	DRIVE-CLiQ Hub Module External
DO	Digital Output	Digital output
DO	Drive Object	Drive object
DP	Decentralized Peripherals	Distributed I/Os
DPRAM	Dual-Port Random Access Memory	Memory with dual access
DRAM	Dynamic Random Access Memory	Dynamic memory
DRIVE-CLiQ	DRIVE Component Link with IQ	DRIVE Component Link with IQ
DSC	Dynamic Servo Control	Dynamic Servo Control
DTC	Digital Time Clock	Time switch

© Siemens AG 2012 All Rights Reserved

Abbreviation	Source of abbreviation	Meaning
E		
EASC	External Armature Short-Circuit	External armature short-circuit
EDS	Encoder Data Set	Encoder data set
EGB	Elektrostatisch gefährdete Baugruppen	Electrostatic Sensitive Devices (ESD)
ELCB	Earth Leakage Circuit Breaker	Residual current operated circuit breaker
ELP	Earth Leakage Protection	Ground-fault monitoring
EMC	Electromagnetic Compatibility	Electromagnetic compatibility
EMF	Electromagnetic Force	Electromagnetic force
EMK	Elektromagnetische Kraft	Electromagnetic force
EMV	Elektromagnetische Verträglichkeit	Electromagnetic compatibility (EMC)
EN	Europäische Norm	European standard
EnDat	Encoder Data Interface	Encoder interface
EP	Enable Pulses	Pulse enable
EPOS	Einfachpositionierer	Basic positioner
ES	Engineering System	Engineering system
ESB	Ersatzschaltbild	Equivalent circuit diagram
ESD	Electrostatic Sensitive Devices	Electrostatic sensitive devices
ESR	Extended Stop and Retract	Extended stop and retract
F		
F...	Fault	Fault
FAQ	Frequently Asked Questions	Frequently asked questions
FBL	Free Blocks	Free function blocks
FCC	Function Control Chart	Function Control Chart
FCC	Flux Current Control	Flux current control
FD	Function Diagram	Function diagram
F-DI	Fail-safe Digital Input	Fail-safe digital input
F-DO	Fail-safe Digital Output	Fail-safe digital output
FEM	Fremderregter Synchronmotor	Separately excited synchronous motor
FEPROM	Flash EPROM	Non-volatile read/write memory
FG	Function Generator	Function generator
FI	-	Fault current
FOC	Fiber-Optic Cable	Fiber-optic cable
FP	Funktionsplan	Function diagram
FPGA	Field Programmable Gate Array	Field Programmable Gate Array
FW	Firmware	Firmware
G		
GB	Gigabyte	Gigabyte
GC	Global Control	Global Control Telegram (broadcast telegram)
GND	Ground	Reference potential for all signal and operating voltages, usually defined as 0 V (also referred to as G)

© Siemens AG 2012 All Rights Reserved

Abbreviation	Source of abbreviation	Meaning
GSD	Gerätestammdatei	Generic Station Description: Describes the characteristics of a PROFIBUS slave
GSV	Gate Supply Voltage	Gate supply voltage
GUID	Globally Unique Identifier	Globally unique identifier
H		
HF	High Frequency	High frequency
HFD	Hochfrequenzdrossel	High-frequency reactor
HLG	Hochlaufgeber	Ramp-function generator
HMI	Human Machine Interface	Human Machine Interface
HTL	High-Threshold Logic	Logic with a high fault threshold
HW	Hardware	Hardware
I		
i. V.	In Vorbereitung	Under development: This feature is not currently available
I/O	Input/Output	Input/output
I2C	Inter-Integrated Circuit	Internal serial data bus
IASC	Internal Armature Short-Circuit	Internal armature short-circuit
IBN	Inbetriebnahme	Commissioning
ID	Identifier	Identification
IE	Industrial Ethernet	Industrial Ethernet
IEC	International Electrotechnical Commission	International Electrotechnical Commission
IF	Interface	Interface
IGBT	Insulated Gate Bipolar Transistor	Insulated gate bipolar transistor
IGCT	Integrated Gate-Controlled Thyristor	Semiconductor circuit breaker with integrated control electrode
IL	Impulslöschung	Pulse suppression
IP	Internet Protocol	Internet Protocol
IPO	Interpolator	Interpolator
IT	Isolé Terré	Non-grounded three-phase power supply
IVP	Internal Voltage Protection	Internal voltage protection
J		
JOG	Jogging	Jogging
K		
KDV	Kreuzweiser Datenvergleich	Crosswise data comparison
KHP	Know-how protection	Know-how protection
KIP	Kinetische Pufferung	Kinetic buffering
Kp	-	Proportional gain
KTY	-	Special temperature sensor
L		
L	-	Formula symbol for inductance
LED	Light Emitting Diode	Light emitting diode
LIN	Linearmotor	Linear motor

© Siemens AG 2012 All Rights Reserved

Abbreviation	Source of abbreviation	Meaning
LR	Lageregler	Position controller
LSB	Least Significant Bit	Least significant bit
LSC	Line-Side Converter	Line-side converter
LSS	Line-Side Switch	Line-side switch
LU	Length Unit	Length unit
LWL	Lichtwellenleiter	Fiber-optic cable
M		
M	-	Formula symbol for torque
M	Masse	Reference potential for all signal and operating voltages, usually defined as 0 V (also referred to as GND)
MB	Megabyte	Megabyte
MCC	Motion Control Chart	Motion Control Chart
MDI	Manual Data Input	Manual data input
MDS	Motor Data Set	Motor data set
MLFB	Maschinenlesbare Fabrikatebezeichnung	Machine-readable product code
MMC	Man-Machine Communication	Man-machine communication
MMC	Micro Memory Card	Micro memory card
MSB	Most Significant Bit	Most significant bit
MSC	Motor-Side Converter	Motor-side converter
MSCY_C1	Master Slave Cycle Class 1	Cyclic communication between master (Class 1) and slave
MSR	Motorstromrichter	Motor-side converter
MT	Messtaster	Probe
N		
N. C.	Not Connected	Not connected
N...	No Report	No message or internal message
NAMUR	Normenarbeitsgemeinschaft für Mess- und Regeltechnik in der chemischen Industrie	Standardization association for measurement and control in chemical industries
NC	Normally Closed (contact)	NC contact
NC	Numerical Control	Numerical control
NEMA	National Electrical Manufacturers Association	Standardization body in the USA (United States of America)
NM	Nullmarke	Zero mark
NO	Normally Open (contact)	NO contact
NSR	Netzstromrichter	Line-side converter
NVRAM	Non-Volatile Random Access Memory	Non-volatile read/write memory
O		
OA	Open Architecture	Open Architecture
OC	Operating Condition	Operating condition
OEM	Original Equipment Manufacturer	Original equipment manufacturer
OLP	Optical Link Plug	Fiber-optic bus connector

© Siemens AG 2012 All Rights Reserved

Abbreviation	Source of abbreviation	Meaning
OMI	Option Module Interface	Option module interface
P		
p...	-	Adjustable parameter
P1	Processor 1	Processor 1
P2	Processor 2	Processor 2
PB	PROFIBUS	PROFIBUS
PcCtrl	PC Control	Control for master
PD	PROFIdrive	PROFIdrive
PDS	Power Unit Data Set	Power unit data set
PE	Protective Earth	Protective earth (ground)
PELV	Protective Extra Low Voltage	Protective extra low voltage
PEM	Permanenterregter Synchronmotor	Permanent-magnet synchronous motor
PG	Programmiergerät	Programming device
PI	Proportional Integral	Proportional integral
PID	Proportional Integral Differential	Proportional integral differential
PLC	Programmable Logic Controller	Programmable logic controller
PLL	Phase-Locked Loop	Phase-locked loop
PN	PROFINET	PROFINET
PNO	PROFIBUS Nutzerorganisation	PROFIBUS user organization
PPI	Point-to-Point Interface	Point-to-point interface
PRBS	Pseudo Random Binary Signal	White noise
PROFIBUS	Process Field Bus	Serial data bus
PS	Power Supply	Power supply
PSA	Power Stack Adapter	Power Stack Adapter
PTC	Positive Temperature Coefficient	Positive temperature coefficient
PTP	Point-To-Point	Point-to-point
PWM	Pulse Width Modulation	Pulse width modulation
PZD	Prozessdaten	Process data
Q		
R		
r...	-	Display parameter (read-only)
RAM	Random Access Memory	Read/write memory
RCCB	Residual Current Circuit Breaker	Residual current operated circuit breaker
RCD	Residual Current Device	Residual current operated circuit breaker
RCM	Residual Current Monitor	Residual current monitor
RFG	Ramp-Function Generator	Ramp-function generator
RJ45	Registered Jack 45	Term for an 8-pin socket system for data transmission with shielded or non-shielded multi-wire copper cables
RKA	Rückkühlanlage	Cooling unit
RO	Read Only	Read only
RPDO	Receive Process Data Object	Receive process data object

© Siemens AG 2012 All Rights Reserved

Abbreviation	Source of abbreviation	Meaning
RS232	Recommended Standard 232	Interface standard for cable-connected serial data transmission between a sender and receiver (also known as EIA232)
RS485	Recommended Standard 485	Interface standard for a cable-connected differential, parallel, and/or serial bus system (data transmission between a number of senders and receivers, also known as EIA485)
RTC	Real Time Clock	Real-time clock
RZA	Raumzeigerapproximation	Space vector approximation
S		
S1	-	Continuous operation
S3	-	Intermittent operation
SAM	Safe Acceleration Monitor	Safe acceleration monitoring
SBC	Safe Brake Control	Safe brake control
SBH	Sicherer Betriebshalt	Safe operating stop
SBR	Safe Brake Ramp	Safe brake ramp monitoring
SCA	Safe Cam	Safe cam
SD Card	Secure Digital Card	Secure digital memory card
SDI	Safe Direction	Safe motion direction
SE	Sicherer Software-Endschalter	Safe software limit switch
SG	Sicher reduzierte Geschwindigkeit	Safely reduced speed
SGA	Sicherheitsgerichteter Ausgang	Safety-related output
SGE	Sicherheitsgerichteter Eingang	Safety-related input
SH	Sicherer Halt	Safe standstill
SI	Safety Integrated	Safety Integrated
SIL	Safety Integrity Level	Safety Integrity Level
SLM	Smart Line Module	Smart Line Module
SLP	Safely-Limited Position	Safely-limited position
SLS	Safely-Limited Speed	Safely-limited speed
SLVC	Sensorless Vector Control	Vector control without encoder (sensorless)
SM	Sensor Module	Sensor Module
SMC	Sensor Module Cabinet	Sensor Module Cabinet
SME	Sensor Module External	Sensor Module External
SMI	SINAMICS Sensor Module Integrated	SINAMICS Sensor Module Integrated
SN	Sicherer Software-Nocken	Safe software cam
SOS	Safe Operating Stop	Safe operating stop
SP	Service Pack	Service pack
SPC	Setpoint Channel	Setpoint channel
SPI	Serial Peripheral Interface	Serial interface for connecting peripherals
SPS	Speicherprogrammierbare Steuerung	Programmable logic controller

© Siemens AG 2012 All Rights Reserved

Abbreviation	Source of abbreviation	Meaning
SS1	Safe Stop 1	Safe stop 1 (monitored for time and ramping up)
SS2	Safe Stop 2	Safe stop 2
SSI	Synchronous Serial Interface	Synchronous serial interface
SSM	Safe Speed Monitor	Safe feedback from speed monitor
SSP	SINAMICS Support Package	SINAMICS support package
STO	Safe Torque Off	Safe torque off
STW	Steuerwort	Control word
T		
TB	Terminal Board	Terminal Board
TIA	Totally Integrated Automation	Totally Integrated Automation
TM	Terminal Module	Terminal Module
TN	Terre Neutre	Grounded three-phase power supply
Tn	-	Integral time
TPDO	Transmit Process Data Object	Transmit process data object
TT	Terre Terre	Grounded three-phase power supply
TTL	Transistor-Transistor Logic	Transistor-transistor logic
Tv	-	Rate time
U		
UL	Underwriters Laboratories Inc.	Underwriters Laboratories Inc.
UPS	Uninterruptible Power Supply	Uninterruptible power supply
USV	Unterbrechungsfreie Stromversorgung	Uninterruptible power supply
UTC	Universal Time Coordinated	Universal time coordinated
V		
VC	Vector Control	Vector control
Vdc	-	DC link voltage
VdcN	-	Partial DC link voltage, negative
VdcP	-	Partial DC link voltage, positive
VDE	Verband Deutscher Elektrotechniker	Association of German Electrical Engineers
VDI	Verein Deutscher Ingenieure	Association of German Engineers
VPM	Voltage Protection Module	Voltage Protection Module
Vpp	Volt peak to peak	Volt peak to peak
VSM	Voltage Sensing Module	Voltage Sensing Module
W		
WEA	Wiedereinschaltautomatik	Automatic restart
WZM	Werkzeugmaschine	Machine tool
X		
XML	Extensible Markup Language	Standard language for Web publishing and document management

© Siemens AG 2012 All Rights Reserved

Abbreviation	Source of abbreviation	Meaning
Y		
Z		
ZK	Zwischenkreis	DC link
ZM	Zero Mark	Zero mark
ZSW	Zustandswort	Status word

© Siemens AG 2012 All Rights Reserved

© Siemens AG 2012 All Rights Reserved

List of references

C

Documentation for SINAMICS

Catalogs

/D 31/ **SINAMICS and Motors for Single-axis Drives**

Order number: E86060-K5531-A101-A1 Edition: 2012

/D 11/ **SINAMICS G130 Drive Converter Chassis Units**
SINAMICS G150 Drive Converter Cabinet Units

Order number: E86060-K5511-A101-A5 Edition: 2011

/PM 21/ **SIMOTION, SINAMICS S120 and Motors for Production Machines**

Order number: E86060-K4921-A101-A2 Edition: 2011

/D 21.3/ **SINAMICS S120 Chassis Format Units and Cabinet Modules**
SINAMICS S150 Converter Cabinet Units

Order number: E86060-K5521-A131-A3 Edition: 2011

Related catalogs

/ST 70/ **SIMATIC Products for Totally Integrated Automation and Micro Automation**
Ordering information

Order number: E86060-K4670-A101-B3 Edition: 2011

/NC 61/ **SINUMERIK & SINAMICS,**
Equipment for Machine Tools
Ordering information

Order number: E86060-K4461-A101-A3 Edition: 2010

Interactive catalogs

/CA 01/ **Products for Automation and Drives**
DVD

Order number: E86060-D4001-A500-D1 Edition: 10/2011

© Siemens AG 2012 All Rights Reserved

/Mall/ **Industry Mall,**
Catalog and Ordering System for Automation and Drives
www.siemens.com/industrymall

Electronic documentation

/CD2/ **SINAMICS Manual Collection (DOCONCD)**
The SINAMICS System
Order number: 6SL3097-4CA00-0YG1 Edition: 03/2012

User documentation

/BA1/ **SINAMICS G150**
Operating Instructions
Order number: On request Edition: 01/2012

/BA2/ **SINAMICS G130**
Operating Instructions
Order number: On request Edition: 01/2012

/BA3/ **SINAMICS S150**
Operating Instructions
Order number: On request Edition: 01/2012

/GH1/ **SINAMICS S120**
Equipment Manual for Control Units and Additional System Components
Order number: 6SL3097-4AH00-0?P2 Edition: 01/2012

/GH2/ **SINAMICS S120**
Equipment Manual for Booksize Power Units
Order number: 6SL3097-4AC00-0?P4 Edition: 01/2012

/GH3/ **SINAMICS S120**
Equipment Manual for Chassis Power Units
Order number: 6SL3097-4AE00-0?P2 Edition: 01/2012

/GH5/ **SINAMICS S120**
Equipment Manual for Cabinet Modules
Order number: On request Edition: 01/2012

/GH6/ **SINAMICS S120**
Equipment Manual AC Drive
Order number: 6SL3097-4AL00-0?P1 Edition: 01/2012

© Siemens AG 2012 All Rights Reserved

/GH7/ **SINAMICS S120**
Equipment Manual for Chassis Liquid Cooled Power Units
Order number: 6SL3097-4AM00-0?P2 Edition: 01/2012

/GS1/ **SINAMICS S120**
Getting Started
Order number: 6SL3097-4AG00-0?P1 Edition: 01/2012

/IH1/ **SINAMICS S120**
Commissioning Manual
Order number: 6SL3097-4AF00-0?P2 Edition: 01/2012

/IH2/ **SINAMICS S120**
Commissioning Manual for CANopen
Order number: 6SL3097-4AA00-0?P0 Edition: 11/2009

/FH1/ **SINAMICS S120**
Function Manual for Drive Functions
Order number: 6SL3097-4AB00-0?P2 Edition: 01/2012

/FHS/ **SINAMICS S120**
Function Manual for Safety Integrated
Order number: 6SL3097-4AR00-0?P3 Edition: 01/2012

/FH4/ **SINAMICS/SIMOTION**
Function Manual for DCC Standard Blocks
Order number: 6SL3097-4AQ00-0?P2 Edition: 02/2012

/PB1/ **SINAMICS/SIMOTION**
Programming and Operating Manual for DCC Editor Description
Order number: 6SL3097-4AN00-0?P1 Edition: 02/2012

/LH1/ **SINAMICS S120/S150**
List Manual
Order number: 6SL3097-4AP00-0?P3 Edition: 01/2012

/MA1/ **SINAMICS/SINUMERIK**
Guidelines for Machine Configuration
Order number: 6FC5397-6CP10-0?A1 Edition: 10/2009

/SH1/ **SINAMICS S120 and SIMODRIVE 611**
Guidelines for Control Cabinet Integration
Order number: 6SL3097-0AT00-0?P1 Edition: 10/2009

© Siemens AG 2012 All Rights Reserved

/PFK7S/ **SINAMICS 1FK7 Synchronous Motors**
Configuration Manual
Order number: 6SN1197-0AD16-0?P4 Edition: 10/2011

/PFT6S/ **SINAMICS 1FT6 Synchronous Motors**
Configuration Manual
Order number: 6SN1197-0AD12-0?P0 Edition: 12/2004

/PFT7S/ **SINAMICS 1FT7 Synchronous Motors**
Configuration Manual
Order number: 6SN1197-0AD13-0?P4 Edition: 07/2011

/APH4S/ **SINAMICS 1PH4 Induction Motors**
Configuration Manual
Order number: 6SN1197-0AD64-0?P1 Edition: 08/2008

/APH7P/ **SINAMICS 1PH7 Induction Motors (PM)**
Configuration Manual for Production Machines
Order number: 6SN1197-0AC71-0?P0 Edition: 05/2007

/APH7W/ **SINAMICS 1PH7 Induction Motors (MT)**
Configuration Manual for Machine Tools
Order number: 6SN1197-0AD72-0?P0 Edition: 04/2009

/PPMS/ **SINAMICS 1PM4/1PM6 Hollow-Shaft Motors**
Configuration Manual
Order number: 6SN1197-0AD23-0?P0 Edition: 04/2008

/PKTS/ **SINAMICS 1FW3 Complete Torque Motors**
Configuration Manual
Order number: 6SN1197-0AD70-0?P5 Edition: 07/2011

/PMH2/ **SINAMICS SIMAG H2 Hollow-Shaft Measuring System**
Configuration Manual
Order number: 6SN1197-0AB31-0?P8 Edition: 01/2011

/PH8S/ **SINAMICS 1PH8 Synchronous/Induction Motors**
Configuration Manual
Order number: 6SN1197-0AD74-0?P1 Edition: 04/2010

/PH1/ **EMC Installation Guidelines**
Configuration Manual
Order number: 6FC5297-0AD30-0?P3 Edition: 01/2012

© Siemens AG 2012 All Rights Reserved

Documentation for PROFIBUS

/P1/ **PROFIBUS-DP/DPV1 IEC 61158**
Basics, Tips and Tricks for Users
Hüthig; Manfred Popp, 2nd Edition

ISBN 3-7785-2781-9

/P2/ **PROFIBUS-DP, Getting Started**
PROFIBUS Nutzerorganisation e.V.; Manfred Popp

Order number: 4.071

/P3/ **Distributed Layouts using PROFIBUS-DP**
Architecture and Fundamentals, Configuration and Use of PROFIBUS-DP with SIMATIC S7
SIEMENS; Publicis MCD Verlag; Josef Weigmann, Gerhard Kilian

Order number: A19100-L531-B714
ISBN 3-89578-074-X

/P4/ **Manual for PROFIBUS Networks, SIEMENS**

Order number: 6GK1970-5CA20-0BA0

/P5/ **PROFIBUS and PROFINET, PROFIdrive Profile Drive Technology**
PROFIBUS Nutzerorganisation e. V.
Haid-und-Neu-Straße 7, D-76131 Karlsruhe, Germany
http://www.profibus.com

Order number: 3.172 Version 4.0 August 2005

/IKPI/ **Industrial Communication for Automation and Drives**
Catalog

Order number: E86060-K6710-A101-B4 Edition: 2005

/PDP/ **PROFIBUS Installation Guidelines**
Installation Guideline for PROFIBUS FMS/DP
Installation and Wiring Recommendation for RS 485 Transmission

Order number 2.111 (German)
2.112 (English) Version 1.0

© Siemens AG 2012 All Rights Reserved

Documentation for Safety Equipment

Note

For more information on technical documentation in and around the topic of "Safety Integrated", please follow the link below:

http://www.siemens.de/safety

The following list contains some of the safety-related documentation available.

/LV1/ **SIRIUS-SENTRON-SIVACON Low-Voltage Controls and Distribution**
Catalog
Order number: E86060-K1002-A101-A5 Edition: 2006

/MRL/ **Directive 2006/42/EU of the European Parliament and Council**
Machinery Directive
Bundesanzeiger-Verlags GmbH Edition: 2006

/SISH/ **Safety Integrated**
System Manual
Order number: 6ZB5000-0AA01-0BA1 5th Edition

System Manual Appendix to 5th Edition
Order number: 6ZB5000-0AB01-0BA0

/SICD/ **Safety Integrated**
CD-ROM
Order number: E20001-F500-P210 Edition: 04/2008

© Siemens AG 2012 All Rights Reserved

Index

D

Numbers

1020
Explanation of the symbols (Part 1), 2-981
1021
Explanation of the symbols (Part 2), 2-982
1022
Explanation of the symbols (Part 3), 2-983
1030
Handling BICO technology, 2-984
1510
CU320-2 input/output terminals, 2-986
1520
PROFIdrive, 2-987
1530
Internal control/status words, data sets, 2-988
1550
Setpoint channel, 2-989
1680
Vector control, encoder evaluations (position, speed, temperature), 2-990
1690
Vector control, V/f control, 2-991
1700
Vector control, speed control and generation of the torque limits, 2-992
1710
Vector control, current control, 2-993
1750
Monitoring functions, faults, alarms, 2-994
1773
Basic Infeed, 2-995
1790
Terminal Board 30 (TB30), 2-996
1840
Terminal Module 31 (TM31), 2-997
1850
Terminal Module 54F (TM54F), 2-998
2120
CU320-2 digital inputs, electrically isolated (DI 0 ... DI 3, DI 16, DI 17), 2-1000
2121
CU320-2 digital inputs, electrically isolated (DI 4 ... DI 7, DI 20, DI 21), 2-1001
2130
CU320-2 digital inputs/outputs, bidirectional (DI/DO 8 ... DI/DO 9), 2-1002
2131
CU320-2 digital inputs/outputs, bidirectional (DI/DO 10 ... DI/DO 11), 2-1003
2132
CU320-2 digital inputs/outputs, bidirectional (DI/DO 12 ... DI/DO 13), 2-1004
2133
CU320-2 digital inputs/outputs, bidirectional (DI/DO 14 ... DI/DO 15), 2-1005
2211
CU_LINK data transfer, 2-1007
2410
PROFIBUS (PB) / PROFINET (PN), addresses and diagnostics, 2-1010
2415
Standard telegrams and process data 1, 2-1011
2416
Standard telegrams and process data 2, 2-1012
2419
Manufacturer-specific telegrams and process data 1, 2-1013
2420
Manufacturer-specific telegrams and process data 2, 2-1014
2421
Manufacturer-specific telegrams and process data 3, 2-1015
2422
Manufacturer-specific telegrams and process data 4, 2-1016

© Siemens AG 2012 All Rights Reserved

2423
Manufacturer-specific/free telegrams and process data, 2-1017
2425
STW1_BM control word metal industry interconnection, 2-1018
2426
STW2_BM control word metal industry interconnection, 2-1019
2427
E_STW1_BM control word infeed metal industry interconnection, 2-1020
2428
ZSW1_BM status word metal industry interconnection, 2-1021
2429
ZSW2_BM status word metal industry interconnection, 2-1022
2430
E_ZSW1_BM status word infeed metal industry interconnection, 2-1023
2439
PZD receive signals, interconnection, profile-specific, 2-1024
2440
PZD receive signals, interconnection, manufacturer-specific, 2-1025
2441
STW1 control word interconnection (p2038 = 2), 2-1026
2442
STW1 control word interconnection (p2038 = 0), 2-1027
2444
STW2 control word interconnection (p2038 = 0), 2-1028
2447
E_STW1 control word infeed interconnection, 2-1029
2449
PZD send signals, interconnection, profile-specific, 2-1030
2450
PZD send signals, interconnection, manufacturer-specific, 2-1031
2451
ZSW1 status word interconnection (p2038 = 2), 2-1032
2452
ZSW1 status word interconnection (p2038 = 0), 2-1033
2454
ZSW2 status word interconnection (p2038 = 0), 2-1034
2457
E_ZSW1 status word infeed interconnection, 2-1035
2468
IF1 receive telegram, free interconnection via BICO (p0922 = 999), 2-1036
2470
IF1 send telegram, free interconnection via BICO (p0922 = 999), 2-1037
2472
IF1 status words, free interconnection, 2-1038
2481
IF1 receive telegram, free interconnection via BICO (p0922 = 999), 2-1039
2483
IF1 send telegram, free interconnection via BICO (p0922 = 999), 2-1040
2485
IF2 receive telegram, free interconnection via BICO, 2-1041
2487
IF2 send telegram, free interconnection, 2-1042
2489
IF2 status words, free interconnection, 2-1043
2491
IF2 receive telegram, free interconnection, 2-1044
2493
IF2 send telegram, free interconnection, 2-1045
2495
CU_STW1 control word 1, Control Unit interconnection, 2-1046
2496
CU_ZSW1 status word 1, Control Unit interconnection, 2-1047
2497
A_DIGITAL interconnection, 2-1048
2498
E_DIGITAL interconnection, 2-1049
2499
A_DIGITAL_1 interconnection, 2-1050
2500
E_DIGITAL_1 interconnection, 2-1051
2501
Control word, sequence control, 2-1053

© Siemens AG 2012 All Rights Reserved

2503
Status word, sequence control, 2-1054
2505
Control word, setpoint channel, 2-1055
2520
Control word, speed controller, 2-1056
2522
Status word, speed controller, 2-1057
2526
Status word, closed-loop control, 2-1058
2530
Status word, current control, 2-1059
2534
Status word, monitoring functions 1, 2-1060
2536
Status word, monitoring functions 2, 2-1061
2537
Status word, monitoring functions 3, 2-1062
2546
Control word, faults/alarms, 2-1063
2548
Status word, faults/alarms 1 and 2, 2-1064
2610
Sequencer, 2-1066
2634
Missing enable signals, line contactor control, logic operation, 2-1067
2701
Basic brake control (r0108.14 = 0), 2-1069
2704
Extended brake control, zero-speed detection (r0108.14 = 1), 2-1070
2707
Extended brake control, open/close brake (r0108.14 = 1), 2-1071
2711
Extended brake control, signal outputs (r0108.14 = 1), 2-1072
2800
Basic functions, parameter manager, 2-1074
2802
Monitoring and faults/alarms, 2-1075
2804
Status words, 2-1076
2810
STO (Safe Torque Off), SS1 (Safe Stop 1), 2-1077
2811
STO (Safe Torque Off), safe pulse suppression, 2-1078
2814
SBC (Safe Brake Control), SBA (Safe Brake Adapter), 2-1079
2820
SLS (Safely-Limited Speed), 2-1081
2822
SLP (Safely-Limited Position), 2-1082
2825
SS1, SS2, SOS, internal STOP B, C, D, F, 2-1083
2840
Control word and status word, 2-1084
2846
SI Extended Functions, parameter manager, 2-1085
2847
TM54F parameter manager, 2-1086
2848
TM54F configuration, F-DI/F-DO test, 2-1087
2850
TM54F (F-DI 0 ... F-DI 4), 2-1088
2851
TM54F (F-DI 5 ... F-DI 9), 2-1089
2853
TM54F (F-DO 0 ... F-DO 3, DI 20 ... DI 23), 2-1090
2855
TM54F control interface (p9601.2 = 1 & p9601.3 = 0), 2-1091
2856
TM54F Safe State selection, 2-1092
2857
TM54F assignment (F-DO 0 ... F-DO 3), 2-1093
2860
SSM (Safe Speed Monitor), 2-1094
2861
SDI (Safe Direction), 2-1095
3010
Fixed speed setpoints, 2-1097
3020
Motorized potentiometer, 2-1098
3030
Main/supplementary setpoint, setpoint scaling, jogging, 2-1099

© Siemens AG 2012 All Rights Reserved

3040
Direction limitation and direction reversal, 2-1100
3050
Skip frequency bands and speed limitations, 2-1101
3060
Basic ramp-function generator, 2-1102
3070
Extended ramp-function generator, 2-1103
3080
Ramp-function generator selection, status word, tracking, 2-1104
4704
Raw signal sensing, 2-1106
4715
Speed actual value and pole position sensing, motor encoder ASM/SM (encoder 1), 2-1107
6030
Speed setpoint, droop, 2-1109
6031
Pre-control balancing, reference/ acceleration model, 2-1110
6040
Speed controller with/without encoder, 2-1111
6050
Speed controller adaptation (Kp_n/Tn_n adaptation), 2-1112
6060
Torque setpoint, 2-1113
6220
Vdc_max controller and Vdc_min controller, 2-1114
6300
V/f characteristic and voltage boost, 2-1115
6310
Resonance damping and slip compensation, 2-1116
6320
Vdc_max controller and Vdc_min controller (U/f), 2-1117
6490
Speed control configuration, 2-1118
6491
Flux control configuration, 2-1119
6630
Upper/lower torque limit, 2-1120
6640
Current/power/torque limits, 2-1121
6710
Current setpoint filter, 2-1122
6714
Iq and Id controller, 2-1123
6721
Id setpoint (PEM, p0300 = 2), 2-1124
6722
Field weakening characteristic, Id setpoint (ASM, p0300 = 1), 2-1125
6723
Field weakening controller, flux controller (ASM, p0300 = 1), 2-1126
6724
Field weakening controller (PEM, p0300 = 2), 2-1127
6730
Interface to the Motor Module (ASM, p0300 = 1), 2-1128
6731
Interface to the Motor Module (PEM, p0300 = 2), 2-1129
6799
Display signals, 2-1130
7010
Friction characteristic, 2-1132
7014
External Armature Short-Circuit (EASC, p0300 = 2xx or 4xx), 2-1133
7016
Internal Armature Short-Circuit (IASC, p0300 = 2xx or 4xx), 2-1134
7017
DC braking (p0300 = 1xx), 2-1135
7020
Synchronization, 2-1136
7950
Fixed values, binary selection (r0108.16 = 1 and p2216[D] = 2), 2-1138
7951
Fixed values, direct selection (r0108.16 = 1 and p2216 = 1), 2-1139
7954
Motorized potentiometer (r0108.16 = 1), 2-1140
7958
Closed-loop control (r0108.16 = 1), 2-1141
7960
DC-link voltage controller (r0108.16 = 1), 2-1142
8010
Speed signals 1, 2-1144

© Siemens AG 2012 All Rights Reserved

8011
Speed signals 2, 2-1145
8012
Torque signals, motor locked/stalled, 2-1146
8013
Load monitoring (r0108.17 = 1), 2-1147
8014
Thermal monitoring, power unit, 2-1148
8016
Thermal monitoring, motor, 2-1149
8017
Thermal motor models (p0300 = xxx), 2-1150
8060
Fault buffer, 2-1152
8065
Alarm buffer, 2-1153
8070
Fault/alarm trigger word (r2129), 2-1154
8075
Fault/alarm configuration, 2-1155
8134
Measuring sockets, 2-1156
8560
Command Data Sets (CDS), 2-1158
8565
Drive Data Sets (DDS), 2-1159
8570
Encoder Data Sets (EDS), 2-1160
8575
Motor Data Sets (MDS), 2-1161
8580
Power unit Data Sets, PDS, 2-1162
8720
Control word
sequence control infeed, 2-1164
8726
Status word
sequence control infeed, 2-1165
8732
Sequencer, 2-1166
8734
Missing enable signals, line contactor control, 2-1167
8750
Interface to the Basic Infeed power unit (control signals, actual values), 2-1168
8760
Signals and monitoring functions (p3400 = 0), 2-1169
9100
TB30 digital inputs, electrically isolated (DI 0 ... DI 3), 2-1171
9102
TB30 digital outputs, electrically isolated (DO 0 ... DO 3), 2-1172
9104
TB30 analog inputs (AI 0 ... AI 1), 2-1173
9106
TB30 analog outputs (AO 0 ... AO 1), 2-1174
9204
Receive telegram, free PDO mapping (p8744 = 2), 2-1176
9206
Receive telegram, Predefined Connection Set (p8744 = 1), 2-1177
9208
Send telegram, free PDO mapping (p8744 = 2), 2-1178
9210
Send telegram, Predefined Connection Set (p8744 = 1), 2-1179
9220
Control word, CANopen, 2-1180
9226
Status word, CANopen, 2-1181
9550
TM31 digital inputs, electrically isolated (DI 0 ... DI 3), 2-1183
9552
TM31 digital inputs, electrically isolated (DI 4 ... DI 7), 2-1184
9556
TM31 digital relay outputs, electrically isolated (DO 0 ... DO 1), 2-1185
9560
TM31 digital inputs/outputs, bidirectional (DI/DO 8 ... DI/DO 9), 2-1186
9562
TM31 digital inputs/outputs, bidirectional (DI/DO 10 ... DI/DO 11), 2-1187
9566
TM31 analog input 0 (AI 0), 2-1188
9568
TM31 analog input 1 (AI 1), 2-1189
9572
TM31 analog outputs (AO 0 ... AO 1), 2-1190

© Siemens AG 2012 All Rights Reserved

9576
TM31 temperature evaluation (KTY/PTC), 2-1191
9625
TM150 Temperature evaluation structure (channel 0 ... 11), 2-1193
9626
TM150 Temperature evaluation 1x2, 3, 4-wire (channel 0 ... 5), 2-1194
9627
TM150 Temperature evaluation 2x2-wire (channel 0 ... 11), 2-1195
9880
VSM analog inputs (AI 0 ... AI 3), 2-1197
9886
VSM temperature evaluation, 2-1198
9912
BOP20 control word interconnection, 2-1200

A

Access level (parameter), 1-19
Acknowledgement
Adjustable, 3-1208
Default, 3-1208
IMMEDIATELY, 3-1205
POWER ON, 3-1205
PULSE DISABLE, 3-1205
Active (parameter, C1(x), C2(x), U, T), 1-18
Address
PROFIBUS, 2-1010
PROFINET, 2-1010
Technical Support, Preface-7
Adjustable parameter, 1-13
Alarm
Cause, 3-1209
Display, 3-1202
Drive object, 3-1208
Explanation of list, 3-1207
Fault location, 3-1208
How to distinguish an alarm from a fault, 3-1202
List of all alarms, 3-1212
Message value, 3-1208
Name, 3-1208
Number, 3-1207
Number range, 3-1212
Remedy, 3-1209
Alarm buffer, 2-1151
Alarm value, 3-1209
Analog inputs
Terminal Board 30 (TB30), 2-1170
Terminal Module 31 (TM31), 2-1182
Analog outputs
Terminal Board 30 (TB30), 2-1170
Terminal Module 31 (TM31), 2-1182
ASCII table, A-1658
Axxxx, 3-1207

B

Basic Infeed, 2-1163
Control word, sequence control, 2-1164
Interface (control signals, actual values), 2-1168
Missing enable signals, line contactor control, 2-1167
Sequencer, 2-1166
Signals and monitoring functions, 2-1163, 2-1169
Status word, sequence control, 2-1165
Table of contents, 2-1163
Basic Operator Panel (BOP), 2-1199
Basic/extended brake control, 2-1068
BI, Binector Input, 1-14
BICO technology, 2-984
Binector
Input (BI), 1-14
Output (BO), 1-14
Bit array (parameter), 1-27
BO, Binector Output, 1-14
Brake control
Basic, 2-1068
Extended, 2-1068

C

C1(x) - Device commissioning state, 1-18
C2(x) - Drive commissioning state, 1-18
Calculated (parameter), 1-19
Can be changed (parameter, C1(x), C2(x), U, T), 1-18
Catalogs, C-1669
CDS, Command Data Set, 1-21, 2-1157, 2-1158
CI, Connector Input, 1-14
CO, Connector Output, 1-14
CO/BO, Connector/Binector Output, 1-14
Command data sets, 2-1157
Communication
CANopen, 2-1175
Communication Board CAN 10 (CBC10), 2-1175
Configuring messages, 2-1151
Connector
Input (CI), 1-14
Output (CO), 1-14

© Siemens AG 2012 All Rights Reserved

Control
Basic Infeed, 2-1163
Technology controller, 2-1141
Vector, 2-1108
Control Unit 320-2 (CU320-2)
Digital inputs, 2-999
Digital inputs/outputs, 2-999
Control words, 2-1008
Internal, 2-1052
Standard telegrams, 2-1008
Converter
Binector/connector, 2-1038, 2-1043
Connector-binector, 2-1036, 2-1039, 2-1041, 2-1044
CU_LINK, 2-1006
Cxxxxx, 3-1207

D

Data set, 1-21
Command data set, CDS, 1-21
Drive data set, DDS, 1-21
Encoder data set, EDS, 1-21
Motor data set, MDS, 1-21
Power unit data set, PDS, 1-21
Data sets, 2-1157
Command data set, 1-21
Drive data set, 1-21
Encoder data set, 1-21
Motor data set, 1-21
Power unit data set, 1-21
Data type (parameter, signal source), 1-20
DCBRAKE, 3-1204
DDS, Drive Data Set, 1-21, 2-1157, 2-1159
Dependency (parameter), 1-27
Description (parameter), 1-26
Digital inputs
Control Unit 320-2 (CU320-2), 2-999
Terminal Board 30 (TB30), 2-1170
Terminal Module 31 (TM31), 2-1182
Digital inputs/outputs
Control Unit 320-2 (CU320-2), 2-999
Terminal Module 31 (TM31), 2-1182
Digital outputs
Control Unit 320-2 (CU320-2), 2-999
Terminal Board 30 (TB30), 2-1170
Terminal Module 31 (TM31), 2-1182
Direction limitation, 2-1096
Direction reversal, 2-1096
Display
Alarms, 3-1202
Faults, 3-1202
Display parameter, 1-13
DO, Drive Object, 1-15
Drive data sets, 2-1157
Drive object, 1-15
DSC (Dynamic Servo Control), 2-1096

E

EDS, Encoder Data Set, 1-21, 2-1157, 2-1160
ENCODER, 3-1204
Encoder data sets, 2-1157
Encoder evaluation, 2-1105
Expert list, 1-26
Explanations
on function diagrams, 2-980

F

Factory setting, 1-25
Fault
Acknowledgement, 3-1205, 3-1208
Cause, 3-1209
Display, 3-1202
Drive object, 3-1208
Explanation of list, 3-1207
Fault location, 3-1208
Fault reaction, 3-1203, 3-1208
General information, 3-1202
How to distinguish a fault from an alarm, 3-1202
List of all faults, 3-1212
Message value, 3-1208
Name, 3-1208
Number, 3-1207
Number range, 3-1212
Remedy, 3-1209
Saving when switching off, 3-1206
Fault buffer, 2-1151
Saving when switching off, 3-1206
Structure, 2-1152
Fault value, 3-1209
Fixed speed setpoints, 2-1096
Fixed values, 2-982, 2-1138, 2-1139
Free interconnection via BICO, 2-1008
Free interconnection, status words, 2-1038, 2-1043
Friction characteristic, 2-1132
Function (parameter), 1-26

© Siemens AG 2012 All Rights Reserved

Function diagrams, Basic Infeed
Control word
sequence control infeed, 2-1164
Interface to the Basic Infeed power unit (control signals, actual values), 2-1168
Missing enable signals, line contactor control, 2-1167
Sequencer, 2-1166
Signals and monitoring functions (p3400 = 0), 2-1169
Status word
sequence control infeed, 2-1165
Function diagrams, Basic Operator Panel 20 (BOP20)
Control word BOP20 interconnection, 2-1200
Function diagrams, brake control
Basic brake control (r0108.14 = 0), 2-1069
Extended brake control, open/close brake (r0108.14 = 1), 2-1071
Extended brake control, signal outputs (r0108.14 = 1), 2-1072
Extended brake control, zero-speed detection (r0108.14 = 1), 2-1070
Function diagrams, Communication Board CAN
Control word, CANopen, 2-1180
Receive telegram, free PDO mapping (p8744 = 2), 2-1176
Receive telegram, Predefined Connection Set (p8744 = 1), 2-1177
Send telegram, free PDO mapping (p8744 = 2), 2-1178
Send telegram, Predefined Connection Set (p8744 = 1), 2-1179
Status word, CANopen, 2-1181
Function diagrams, CU_LINK
CU_LINK data transfer, 2-1007
Function diagrams, CU320-2 input/output terminals
Digital inputs, electrically isolated (DI 0 ... DI 3, DI 16, DI 17), 2-1000
Digital inputs, electrically isolated (DI 4 ... DI 7, DI 20, DI21), 2-1001
Digital inputs/outputs, bidirectional (DI/DO 10 ... DI/DO 11), 2-1003
Digital inputs/outputs, bidirectional (DI/DO 12 ... DI/DO 13), 2-1004
Digital inputs/outputs, bidirectional (DI/DO 14 ... DI/DO 15), 2-1005
Digital inputs/outputs, bidirectional (DI/DO 8 ... DI/DO 9), 2-1002
Function diagrams, data sets
Command Data Sets (CDS), 2-1158
Drive Data Sets (DDS), 2-1159
Encoder Data Sets (EDS), 2-1160
Motor Data Sets (MDS), 2-1161
Power unit Data Sets, PDS, 2-1162
Function diagrams, diagnostics
Alarm buffer, 2-1153
Fault buffer, 2-1152
Fault/alarm configuration, 2-1155
Fault/alarm trigger word (r2129), 2-1154
Measuring sockets, 2-1156
Function diagrams, encoder evaluation
Raw signal sensing, 2-1106
Speed actual value and pole position sensing, motor encoder ASM/SM (encoder 1), 2-1107
Function diagrams, explanations
Explanation of the symbols (Part 1), 2-981
Explanation of the symbols (Part 2), 2-982
Explanation of the symbols (Part 3), 2-983
Handling BICO technology, 2-984
Function diagrams, internal control/status words
Control word, faults/alarms, 2-1063
Control word, sequence control, 2-1053
Control word, setpoint channel, 2-1055
Control word, speed controller, 2-1056
Status word, closed-loop control, 2-1058
Status word, current control, 2-1059
Status word, faults/alarms 1 and 2, 2-1064
Status word, monitoring functions 1, 2-1060
Status word, monitoring functions 2, 2-1061
Status word, monitoring functions 3, 2-1062
Status word, sequence control, 2-1054
Status word, speed controller, 2-1057

© Siemens AG 2012 All Rights Reserved

Function diagrams, overviews
Basic Infeed, 2-995
CU320-2 input/output terminals, 2-986
Internal control/status words, data sets, 2-988
Monitoring functions, faults, alarms, 2-994
PROFIdrive, 2-987
Setpoint channel, 2-989
Terminal Board 30 (TB30), 2-996
Terminal Module 31 (TM31), 2-997
Terminal Module 54F (TM54F), 2-998
Vector control, current control, 2-993
Vector control, encoder evaluations (position, speed, temperature), 2-990
Vector control, speed control and generation of the torque limits, 2-992
Vector control, V/f control, 2-991
Function diagrams, PROFIdrive
A_DIGITAL interconnection, 2-1048
A_DIGITAL_1 interconnection, 2-1050
CU_STW1 control word 1, Control Unit interconnection, 2-1046
CU_ZSW1 status word 1, Control Unit interconnection, 2-1047
E_DIGITAL interconnection, 2-1049
E_DIGITAL_1 interconnection, 2-1051
E_STW1 control word infeed interconnection, 2-1029
E_STW1_BM control word infeed metal industry interconnection, 2-1020
E_ZSW1 status word infeed interconnection, 2-1035
E_ZSW1_BM status word infeed metal industry interconnection, 2-1023
IF1 receive telegram, free interconnection via BICO (p0922 = 999), 2-1036, 2-1039
IF1 send telegram, free interconnection via BICO (p0922 = 999), 2-1037, 2-1040
IF1 status words, free interconnection, 2-1038
IF2 receive telegram, free interconnection, 2-1044
IF2 receive telegram, free interconnection via BICO, 2-1041
IF2 send telegram, free interconnection, 2-1042, 2-1045
IF2 status words, free interconnection, 2-1043
Manufacturer-specific telegrams and process data 1, 2-1013
Manufacturer-specific telegrams and process data 2, 2-1014
Manufacturer-specific telegrams and process data 3, 2-1015
Manufacturer-specific telegrams and process data 4, 2-1016
Manufacturer-specific/free telegrams and process data, 2-1017
PROFIBUS (PB) / PROFINET (PN), addresses and diagnostics, 2-1010
PZD receive signals, interconnection, manufacturer-specific, 2-1025
PZD receive signals, interconnection, profile-specific, 2-1024
PZD send signals, interconnection, manufacturer-specific, 2-1031
PZD send signals, interconnection, profile-specific, 2-1030
Standard telegrams and process data 1, 2-1011
Standard telegrams and process data 2, 2-1012
STW1 control word interconnection (p2038 = 0), 2-1027
STW1 control word interconnection (p2038 = 2), 2-1026
STW1_BM control word metal industry interconnection, 2-1018
STW2 control word interconnection (p2038 = 0), 2-1028
STW2_BM control word metal industry interconnection, 2-1019
ZSW1 status word interconnection (p2038 = 0), 2-1033
ZSW1 status word interconnection (p2038 = 2), 2-1032
ZSW1_BM status word metal industry interconnection, 2-1021
ZSW2 status word interconnection (p2038 = 0), 2-1034
ZSW2_BM status word metal industry interconnection, 2-1022
Function diagrams, sequence control
Missing enable signals, line contactor control, logic operation, 2-1067
Sequencer, 2-1066

© Siemens AG 2012 All Rights Reserved

Function diagrams, setpoint channel
Direction limitation and direction reversal, 2-1100
Fixed speed setpoints, 2-1097
Main/supplementary setpoint, setpoint scaling, jogging, 2-1099
Motorized potentiometer, 2-1098
Ramp-function generator (basic), 2-1102
Ramp-function generator (extended), 2-1103
Ramp-function generator selection, status word, tracking, 2-1104
Skip frequency bands and speed limitations, 2-1101
Function diagrams, SI Basic Functions
Monitoring and faults/alarms, 2-1075
Parameter manager, 2-1074
SBC (Safe Brake Control), SBA (Safe Brake Adapter), 2-1079
Status words, 2-1076
STO (Safe Torque Off), safe pulse suppression, 2-1078
STO (Safe Torque Off), SS1 (Safe Stop 1), 2-1077
Function diagrams, SI Extended Functions
Control word and status word, 2-1084
Parameter manager, 2-1085
SDI (Safe Direction), 2-1095
SLP (Safely-Limited Position), 2-1082
SLS (Safely-Limited Speed), 2-1081
SS1, SS2, SOS, internal STOP B, C, D, F, 2-1083
SSM (Safe Speed Monitor), 2-1094
TM54F (F-DI 0 ... F-DI 4), 2-1088
TM54F (F-DI 5 ... F-DI 9), 2-1089
TM54F (F-DO 0 ... F-DO 3, DI 20 ... DI 23), 2-1090
TM54F assignment (F-DO 0 ... F-DO 3), 2-1093
TM54F configuration, F-DI/F-DO test, 2-1087
TM54F control interface (p9601.2 = 1 & p9601.3 = 0), 2-1091
TM54F parameter manager, 2-1086
TM54F Safe State selection, 2-1092
Function diagrams, signals and monitoring functions
Load monitoring (r0108.17 = 1), 2-1147
Speed signals 1, 2-1144
Speed signals 2, 2-1145
Thermal monitoring, motor, 2-1149
Thermal monitoring, power unit, 2-1148
Thermal motor models (p0300 = xxx), 2-1150
Torque signals, motor locked/stalled, 2-1146
Function diagrams, TB30
Analog inputs (AI 0 ... AI 1), 2-1173
Analog outputs (AO 0 ... AO 1), 2-1174
Digital inputs, electrically isolated (DI 0 ... DI 3), 2-1171
Digital outputs, electrically isolated (DO 0 ... DO 3), 2-1172
Function diagrams, technology controller
Closed-loop control (r0108.16 = 1), 2-1141
DC-link voltage controller (r0108.16 = 1), 2-1142
Fixed values, binary selection (r0108.16 = 1 and p2216[D] = 2), 2-1138
Fixed values, direct selection (r0108.16 = 1 and p2216 = 1), 2-1139
Motorized potentiometer (r0108.16 = 1), 2-1140
Function diagrams, technology functions
DC braking (p0300 = 1xx), 2-1135
External Armature Short-Circuit (EASC, p0300 = 2xx or 4xx), 2-1133
Friction characteristic, 2-1132
Internal Armature Short-Circuit (IASC, p0300 = 2xx or 4xx), 2-1134
Synchronization, 2-1136
Function diagrams, TM150
Temperature evaluation 1x2, 3, 4-wire (channel 0 ... 5), 2-1194
Temperature evaluation 2x2-wire (channel 0 ... 11), 2-1195
Temperature evaluation structure (channel 0 ... 11), 2-1193

© Siemens AG 2012 All Rights Reserved

Function diagrams, TM31
Analog input 0 (AI 0), 2-1188
Analog input 1 (AI 1), 2-1189
Analog outputs (AO 0 ... AO 1), 2-1190
Digital inputs, electrically isolated (DI 0 ... DI 3), 2-1183
Digital inputs, electrically isolated (DI 4 ... DI 7), 2-1184
Digital inputs/outputs, bidirectional (DI/DO 10 ... DI/DO 11), 2-1187
Digital inputs/outputs, bidirectional (DI/DO 8 ... DI/DO 9), 2-1186
Digital relay outputs, electrically isolated (DO 0 ... DO 1), 2-1185
Temperature evaluation (KTY/PTC), 2-1191
Function diagrams, vector control
Current setpoint filter, 2-1122
Current/power/torque limits, 2-1121
Display signals, 2-1130
Field weakening characteristic, Id setpoint (ASM, p0300 = 1), 2-1125
Field weakening controller (PEM, p0300 = 2), 2-1127
Field weakening controller, flux controller (ASM, p0300 = 1), 2-1126
Flux control configuration, 2-1119
Id setpoint (PEM, p0300 = 2), 2-1124
Interface to the Motor Module (ASM, p0300 = 1), 2-1128
Interface to the Motor Module (PEM, p0300 = 2), 2-1129
Iq and Id controller, 2-1123
Pre-control balancing, reference/ acceleration model, 2-1110
Resonance damping and slip compensation, 2-1116
Speed control configuration, 2-1118
Speed controller adaptation (Kp_n/Tn_n adaptation), 2-1112
Speed controller with/without encoder, 2-1111
Speed setpoint, droop, 2-1109
Torque setpoint, 2-1113
Upper/lower torque limit, 2-1120
V/f characteristic and voltage boost, 2-1115
Vdc_max controller and Vdc_min controller, 2-1114
Vdc_max controller and Vdc_min controller (U/f), 2-1117
Function diagrams, VSM
Analog inputs (AI 0 ... AI 3), 2-1197
Temperature evaluation, 2-1198
Function module, 1-15
Fxxxx, 3-1207

G

General information
About parameters, 1-12
on faults and alarms, 3-1202
on function diagrams, 2-980

H

Holding brake, 2-1068
Hotline, Preface-7

I

IASC, 3-1204
Index
Factory setting, 1-26
Parameter, 1-13, 1-26
Input terminals
Control Unit 320-2 (CU320-2), 2-999
Terminal Board 30 (TB30), 2-1170
Terminal Module 31 (TM31), 2-1182
Internal control/status words, 2-1052

J

Jogging, 2-1096, 2-1099

L

Line contactor control, 2-1067, 2-1163
Linked parameter, 1-13
List
Abbreviations, B-1659
ASCII table, A-1658
Complete table of contents, Contents-9
Faults and alarms, 3-1212
List of abbreviations, B-1659
List of references, C-1669
Message ranges, 3-1212
Parameter ranges, 1-28
Parameters for command data sets, 1-951
Parameters for drive data sets, 1-953
Parameters for encoder data sets, 1-961
Parameters for motor data sets, 1-962
Parameters for power unit data sets, 1-965
Parameters for write protection and know-how protection, 1-967
Parameters, all, 1-31
References, C-1669
Table of contents, function diagrams, 2-973

© Siemens AG 2012 All Rights Reserved

List of abbreviations, B-1659
List of references, C-1669
Load monitoring (r0108.17 = 1), 2-1143

M

Main/supplementary setpoint, 2-1096
Manufacturer-specific telegrams, 2-1008
MDS, Motor Data Set, 1-21, 2-1157, 2-1161
Measuring sockets, 2-1151
Message buffer, 2-1151
Message value, 3-1208
Messages, 2-1143
Missing enable signals
  Basic Infeed, 2-1167
  Drive, 2-1067
Monitoring functions, 2-1143
Motor data sets, 2-1157
Motor holding brake, 2-1068
Motorized potentiometer, 2-1096, 2-1140

N

Name
  Alarm, 3-1208
  Fault, 3-1208
  Parameter, 1-14
Not for motor type, 1-25
Notes
  Hotline, Preface-7
  Product information, Preface-5
  Technical Support, Preface-7
Number
  Alarm, 3-1207
  Fault, 3-1207
  Parameter, 1-13
Number range
  Alarms, 3-1212
  Faults, 3-1212
  Parameter, 1-28

O

Object, 1-15
OFF1, 3-1203
OFF1_DELAYED, 3-1203
OFF2, 3-1203
OFF3, 3-1204
Output terminals
  Control Unit 320-2 (CU320-2), 2-999
  Terminal Board 30 (TB30), 2-1170
  Terminal Module 31 (TM31), 2-1182

P

P group (parameter), 1-22
Parameter
  Access level, 1-19
  Calculated, 1-19
  Can be changed, 1-18
  Data type, 1-20
  Description, 1-26
  Dynamic index, 1-21
  Expert list, 1-26
  Full name, 1-14
  Function, 1-26
  Index, 1-13, 1-26
  Linked parameter, 1-13
  List of all parameters, 1-31
  List of parameters for
    command data sets, 1-951
  List of parameters for
    drive data sets, 1-953
  List of parameters for
    encoder data sets, 1-961
  List of parameters for
    motor data sets, 1-962
  List of parameters for
    power unit data sets, 1-965
  Name, 1-14
  Not for motor type, 1-25
  Number, 1-13
  Number range, 1-28
  P group, 1-22
  Safety notices, 1-27
  Scaling, 1-25
  Short name, 1-14
  Unit, 1-22
  Unit group, 1-22
  Unit selection, 1-22
  Values, 1-26
Password for access level 4, 1-19
PDS, Power unit Data Set, 1-21, 2-1157, 2-1162
PID controller (p0108.16 = 1), 2-1137
Power unit data sets, 2-1157
Process data, 2-1008
Product information, Preface-5
PROFIdrive, 2-1008
pxxxx, 1-13

R

Ramp-function generator, 2-1096
Reaction to faults, 3-1203
Relay outputs, 2-1182
Resetting faults, 3-1208
rxxxx, 1-13

© Siemens AG 2012 All Rights Reserved

S

Safety Integrated
  Basic Functions, 2-1073
  Extended functions, 2-1080
Safety notices (parameter), 1-27
Scaling, 1-25
Search tools for manual, Preface-7
Sequence control, 2-1065
Servo control
  Encoder evaluation, 2-1105
Setpoint channel, 2-1096
Signal path in function diagrams, 2-981
Signals, 2-1143
Skip frequency bands, 2-1096
Speed control
  Vector, 2-1108
Speed signals, 2-1143
Status words
  Internal, 2-1052
  Standard telegrams, 2-1008
STOP1, 3-1204
STOP2, 3-1204
Support, Preface-7
Support Request, Preface-7
Synchronization, 2-1136

T

T - Ready for operation state, 1-18
Target group, Preface-6
Technical Support, Preface-7
Technology controller (p0108.16 = 1), 2-1137
Technology functions, 2-1131
Telegrams, 2-1008
Temperature evaluation
  Terminal Module 150 (TM150), 2-1192
  Terminal Module 31 (TM31), 2-1182
Terminal Board 30 (TB30), 2-1170
Terminal Module 150 (TM150), 2-1192
Terminal Module 31 (TM31), 2-1182
Terminals
  Control Unit 320-2 (CU320-2), 2-999
  Terminal Board 30 (TB30), 2-1170
  Terminal Module 31 (TM31), 2-1182
Thermal monitoring, 2-1143
Torque signals, 2-1143
Triggering when messages are issued
  (r2129), 2-1151

U

U - Operation state, 1-18
Unit (parameter), 1-22
Usage phases, Preface-6

V

V/f control
  Vector, 2-1115
Values (parameter), 1-26
Vector control
  Current setpoint filter, 2-1122
  Droop, 2-1109
  Encoder evaluation, 2-1105
  Field weakening characteristic, Id
    setpoint, 2-1125
  Flux control, 2-1119
  Iq and Id controller, 2-1123
  Kp_n-/Tn_n adaptation, 2-1112
  Resonance damping and slip
    compensation, 2-1116
  Speed control configuration, 2-1118
  Speed controller with/without encoder,
    2-1111
  Table of contents, 2-1108
  Torque setpoint, 2-1113
  V/f characteristic, 2-1115
  Vdc_max controller and Vdc_min
    controller, 2-1114, 2-1117
Version
  List of all parameters, 1-31
  List of faults and alarms, 3-1212
  List of parameters for
    command data sets, 1-951
  List of parameters for
    drive data sets, 1-953
  List of parameters for
    encoder data sets, 1-961
  List of parameters for
    motor data sets, 1-962
  List of parameters for
    power unit data sets, 1-965
Voltage Sensing Module (VSM)
  Analog inputs, 2-1196
  Sensor monitoring KTY/PTC, 2-1196
  Temperature evaluation, 2-1196

W

Warning
  General information, 3-1202

© Siemens AG 2012 All Rights Reserved

© Siemens AG 2012 All Rights Reserved

Siemens AG
Industry Sector
Drive Technologies
Large Drives
Postfach 4743
90025 NUREMBERG
GERMANY

www.siemens.com/automation

Subject to change without prior notice
© Siemens AG 2012